MASTER PARTS AND ACCESSORIES CATALOG

(ILLUSTRATIONS)

FORD DIVISION

GENERAL INSTRUCTIONS

This Ford Truck Master Parts Catalog contains parts illustrations for truck series B500, E100/300, F100/500 and P350/500 for model year 1973/for U.S. and Canadian built vehicles.

Use these ILLUSTRATIONS in conjunction with the TEXT in the front portion of the catalog.

For greater convenience this catalog is divided into specific sections such as brakes, front suspension, engine, transmission, etc. For example, FRONT SUSPENSION appears in Section 30, STEERING in Section 35, REAR AXLE in Section 40, etc.

The TEXT portion of the catalog is divided into sections also and like parts are shown under similiar section numbers in both the TEXT and ILLUSTRATION portions of the catalog.

A listing of Ford group numbers and their related section numbers appears in the General Information Section of the TEXT portion of the catalog.

Illustrations contain group numbers only, therefore, it is necessary to refer to the group within the TEXT portion of the catalog listing for complete applicable part number.

The driver's side is the left hand side of the vehicle and determines whether such parts as fenders, lamps, etc. are right or left hand.

Model year application is indicated by showing the first year followed by a diagonal line to indicate continued usage in all subsequent years until the insertion of the last year of usage, which is shown after the diagonal line. If no diagonal line is shown the part is applicable only to the year shown.

Example.

73/	indicates part used 1973 through subsequent models.
73/74	indicates part used 1973 through 1974 model years.
73	indicates part used 1973 model year only.

For Warranty Plate Data, Catalog Model Codes and Body Type Codes refer to the General Information Section of the TEXT portion of the catalog.

SYMBOLS COMMONLY USED IN THIS CATALOG

*	identifies Motorcraft Sales Number.
#	indicates some form of Identification.
★	indicates Not Serviced-must be improvised or procured locally.

MODEL CODES

Truck models are listed throughout this catalog by truck series. A listing of series codes shown on Warranty Plates is included in the General Information Section of the TEXT portion of the catalog. Refer to these codes to determine the series listed in this catalog. Model application is often consolidated as shown below:

Example:

F100/350 means F100 thru F350 or F100, F250 and F350.

and: B-F500 means B500 and F500.

CHASSIS PARTS ILLUSTRATION INDEX

Following is a general index of the major groups shown in the Chassis and Body Parts Illustration Sections. For more specific information refer to the Index appearing in front of the Section number listed below:

MAJOR GROUP	• TABBED DIVIDER TITLE	INDEX SECTION
Accelerator Linkage	Fuel	90
Accessories	Listed in their appropriate groups as identified in this index	
Air Cleaner	Fuel	90
Air Conditioner	Air Cond.-Heaters-Radios-Shock Absorbers	180
Alternator	Generator-Alternator-Starter-Distributor	103
Automatic Transmission	Automatic Transmission	A70
Axle (Front)	Front Axle-Steering	30
Axle (Rear)	Rear Axle	40
Battery	Generator-Alternator-Starter-Distributor	103
Battery Carriers	Generator-Alternator-Starter-Distributor	103
Brake System	Wheel-Brake	10
Bumpers	Bumpers-Mirrors-Speedo. Cable-Tow Hooks-Wipers-Washers	175
Camshaft	Engine	60
Carburetor	Fuel	90
Carrier (Wheel)	Wheel-Brake	10
Clutch	Transmission-Clutch	70
Cooling System	Cooling-Grille	80
Coupling Shaft	Driveshaft-Coupling Shaft	40
Crankcase Vent System	Engine	60
Cylinder Block	Engine	60
Cylinder Head and Valves	Engine	60
Distributor	Generator-Alternator-Starter-Distributor	103
Driveshaft	Driveshaft-Coupling Shaft	40
Electrical	Generator-Alternator-Starter-Distributor	103
Electrical	Lamps-Wiring	130
Emission Control (Thermactor)	Fuel	90
Engine	Engine	60
Engine Supports	Engine	60
Exhaust System	Frames-Muffler-Exhaust	50
Fan	Cooling-Grille	80
Fenders	Fender-Hood	160
Frame	Frame-Muffler-Exhaust	50
Front Axle	Front Axle-Steering	30
Front Springs	Spring-Rear Suspension	50
Front Suspension	Front Axle-Steering	30
Fuel Filter	Fuel	90
Fuel Pump	Fuel	90
Fuel System	Fuel	90
Fuel Tank	Fuel	90
Gearshift Lever	Transmission-Clutch	70
Grille	Cooling-Grille	80

• Applicable to Loose Leaf Catalogs only.

CHASSIS PARTS ILLUSTRATION INDEX cont'd.

MAJOR GROUP	• TABBED DIVIDER TITLE	INDEX SECTION
Heater	Air Cond.-Heaters-Radios-Shock Absorber	180
Hood	Fender-Hood	160
Horn	Lamps-Wiring	130
Hubs	Wheel-Brake	10
Ignition System	Generator-Alternator-Starter-Distributor	103
Instrument Cluster	Generator-Alternator-Starter-Distributor	103
Lamps	Lamps-Wiring	130
Lever (Gearshift)	Transmission-Clutch	70
Manifolds	Fuel	90
Mirrors	Bumpers-Mirrors-Speedo. Cable-Tow Hooks-Wipers-Washers	175
Muffler	Frame-Muffler-Exhaust	50
Oil Pump	Engine	60
Piston and Connecting Rod	Engine	60
Pump (Fuel)	Fuel	90
Pump (Oil)	Engine	60
Pump (Water)	Cooling-Grille	80
Radiator	Cooling-Grille	80
Radios	Air Cond.-Heaters-Radios-Shock Absorbers	180
Rear Axle	Rear Axle	40
Rear Springs	Springs-Rear Suspension	50
Shaft (Coupling)	Driveshaft-Coupling Shaft	40
Shock Absorbers	Air Cond.-Heaters-Radios-Shock Absorber	180
Spare Wheel Carrier	Wheel-Brake	10
Speedo. Cable	Bumpers-Mirrors-Speedo. Cable-Tow Hooks-Wipers-Washers	175
Springs	Springs-Rear Suspension	50
Stabilizer (Front)	Front Axle-Steering	30
Starter	Generator-Alternator-Starter-Distributor	103
Steering	Front Axle-Steering	30
Steering Wheel	Front Axle-Steering	30
Suspension (Front)	Front Axle-Steering	30
Suspension (Rear)	Springs-Rear Suspension	50
Tank (Fuel)	Fuel	90
Tow Hooks	Bumpers-Mirrors-Speedo. Cable-Tow Hooks-Wipers-Washers	175
Thermostatic Choke Control	Fuel	90
Transfer Case	Transmission-Clutch	70
Transmission (Automatic)	Automatic Transmission	A70
Transmission (Manual)	Transmission-Clutch	70
Valves, Push Rods and Covers	Engine	60
Voltage Regulator	Generator-Alternator-Starter-Distributor	103
Water Pump	Cooling-Grille	80
Wheels	Wheels-Brakes	10
Windshield Wiper and Washers	Bumpers-Mirrors-Speedo. Cable-Tow Hooks-Wipers-Washers	175
Wiring	Lamps-Wiring	130

• Applicable to Loose Leaf Catalogs only.

COPYRIGHT © 1979 — FORD MOTOR COMPANY — DEARBORN, MICHIGAN

1973/79 TRUCK SERIES 100/500

BODY PARTS ILLUSTRATION INDEX

MAJOR GROUP	• TABBED DIVIDER TITLE	INDEX SECTION
American Road Camper Parts	Recreational Vehicles	Refer to text catalog
Back Door	Body Parts	Δ
Door Parts	Body Parts	Δ
Exterior Trim	Sheet Metal-Exterior Mldg.-Interior Trim	Δ
Interior Trim	Sheet Metal Exterior Mldg.-Interior Trim	Δ
Platform and Racks	Sheet Metal-Exterior Mldg.-Interior Trim	Δ
Seats	Body Parts	Δ
Sheet Metal	Sheet Metal-Exterior Mldg.-Interior Trim	Δ
Storage Compartment	Body Parts	Δ
Windows (Back and Side)	Body Parts	Δ
Windshield	Body Parts	Δ

HOW TO USE THIS CATALOG

There are three ways of finding part numbers if the group number is not known.

1. By Part Name
2. By Illustration
3. By Identification

Should an inquiry be received for a radiator grille for a 1978 F100:

BY PART NAME -

A. Refer to the Chassis Parts Alphabetical Index in the Text Catalog, form FPS 8096-A.
B. Refer to the alphabetical nomenclature and find the part name "Grille (radiator)". The group number listed is 8200.
C. Refer to group number 8200 and locate 1973 in the "YEAR" column. Find the series F100/350 in the "MODEL/RESTRICTIONS" column.
D. The part number shown is D5TZ 8200-A.

BY ILLUSTRATION -

A. Refer to the tabbed divider marked "COOLING-GRILLE" in this catalog.
B. Refer to the index immediately behind the divider and find the illustration titles for the F Series.
C. Under the heading "RADIATOR GRILLE and RELATED PARTS" find the "Grille" illustration for the 1973 F100.
D. Refer to the illustration designated (on page 2 of Illustration Section 82) and find the group number for the grille to be 8200.
E. Refer to group number 8200 in the Text Catalog and locate 1973 in the "YEAR" column. Find the series F100/350 in the "MODEL/RESTRICTIONS" column.
F. The part number shown is D5TZ 8200-A.

BY IDENTIFICATION -

Certain parts and most major assemblies are identified with a part number shown on an attached tag or plate or on the part itself. Reference to identification numbers is made throughout the catalog and cross reference charts are included in some sections to provide immediate knowledge of the service part number when the identification number is known. All identification information other than charts will be preceded by the symbol (#).

IMPORTANT - Identification tags and plates must be retained with the part or assembly with which they are originally supplied.

• Applicable to Loose Leaf Catalogs only.
Δ Refer to Index Section in front of Body Illustrations.

HOW TO ORDER PARTS

When ordering parts, always give the complete part number.
In the event the part number is not known, the following information should be included.

A. Complete description of part.
B. Model year and body type.
C. Dimension, number of teeth, size, etc., if possible rough sketch of part.
D. If applicable to engine, transmission, axle, steering, etc., specify type, such as 302 cubic inch, Automatic Transmission, Power Steering, etc.
E. Advise how shipment is to be made - Freight, Express, Air, Parcel Post.

EXPLANATION OF SYMBOL ★

★Symbol indicates part is not supplied for service due to the following:

a. Part is superseded and replaced as indicated in the description column of the text catalog.
b. Part can be improvised as indicated in the description column of text catalog.
c. Due to its function there would be little or no demand.

NOTE - ALWAYS REFER TO THE DESCRIPTION COLUMN OF THE TEXT FOR POSSIBLE SUBSTITUTION, OR FOR MATERIAL SPECIFICATIONS AND DIMENSIONS WHICH MAY BE HELPFUL IN OBTAINING THE NON-SERVICED PART LOCALLY.

COPYRIGHT © 1979 — FORD MOTOR COMPANY — DEARBORN, MICHIGAN

INDEX

THIS INDEX SECTION INCLUDES THE FOLLOWING MAJOR GROUPS

BRAKE AIR CHAMBER
BRAKE BOOSTER INSTALLATION
BRAKE BOOSTER PARTS
BRAKE and CLUTCH PEDALS
BRAKE MASTER CYLINDERS
BRAKE SYSTEMS
BRAKE WHEEL CYLINDERS
DIESEL BRAKE VACUUM PUMPS
FRONT and REAR BRAKES
PARKING BRAKES
SPARE WHEEL CARRIERS
WHEELS, HUBS and DRUMS

YEAR 19__	TITLE	MODEL	SECTION	PAGE	ILLUS. NO.
	B SERIES				
	BRAKE BOOSTER INSTALLATION				
73/77	Brake booster (vacuum-dash mounted)	B500	23	1	P-5846
73/74	Brake booster (vacuum-dash mounted)-w/reservoir tanks	B500	23	2	P-6527
75/77	Brake booster (vacuum-dash mounted)-w/reservoir tanks	B500	23	14	P-11676
	BRAKE BOOSTER PARTS				
73/77	Brake booster (dual hydraulic vacuum)-Bendix	B500	23	9	P-6985
73/77	Brake booster (vacuum-dash mounted)-Midland-Ross	B500	23	8	P-4143
	BRAKE and CLUTCH PEDALS				
73/77	Brake and clutch pedals	B500	72	6	P-5849
	BRAKE MASTER CYLINDERS				
73/77	Brake master cylinder (Wagner)-typical	B500	21	7	P-7019
	BRAKE SYSTEMS				
73/77	Hydraulic brake system (rear axle)	B500	22	1	P-6519
73/77	Hydraulic vacuum brake system (dual)--w/dash mounted booster	B500	22	2	P-10872-A
73/77	Hydraulic vacuum brake system (dual)--w/dash mounted booster	B500	22	3	P-10872-B
	BRAKE WHEEL CYLINDERS				
73/77	Front brake cylinder (dual piston)-typical	B500	21	8	P-1423
73/77	Rear brake cylinder (dual piston)-typical	B500	21	8	P-1424
	FRONT and REAR BRAKES				
73/77	Rear brakes (self adjusting-hydraulic)--15" x 4" and 15" x 5" Kelsey Hayes	B500	21	4	P-6437
73/77	Front brakes (single anchor self adjusting-hydraulic) --14" x 2 1/2" Kelsey Hayes	B500	21	4	P-8314
	PARKING BRAKES				
73/77	Parts (trans. internal shoe type)--9" x 2" and 9" x 3"	B500	26	1	P-2848
73	System (trans. internal shoe type)-w/Orscheln lever-"Before Ser. S00,001"	B500	26	7	P-6998
73/77	System (trans. internal shoe type)-w/Orscheln lever-"From Ser.S00,001"	B500	26	12	P-11251
	SPARE WHEEL CARRIERS				
73/77	Spare wheel carrier (frame mounted)	B500	10	7	P-9922
	WHEELS, HUBS and DRUMS				
73/77	Front wheel parts	B500	10	2	P-2004
73/77	Front wheel parts (w/two piece wheel)	B500	10	3	P-649
73/77	Rear wheel hubs, bearings	B500	10	6	P-8750

COPYRIGHT © 1979 FORD MOTOR COMPANY —DEARBORN, MICHIGAN

INDEX

YEAR 19__	TITLE	MODEL	SECTION	PAGE	ILLUS. NO.
	E SERIES				
	BRAKE BOOSTER INSTALLATION				
73/	Brake booster (vacuum-dash mounted)	E100/350	23	7	P-8464
	BRAKE and CLUTCH PEDALS				
73/74	Brake and clutch pedals	E100/300	72	4	P-11019
75/	Brake and clutch pedals	E100/350	72	10	P-11660
	BRAKE MASTER CYLINDERS				
73/	Brake master cylinder-Bendix	E100/350	21	7	P-6999
	BRAKE SYSTEMS				
73/74	Hydraulic brake system	E100/300	22	4	P-6368
75/	Hydraulic brake system-front section (Page A)	E100/350	22	14	P-13320
75/	Hydraulic brake system-rear section (Page B)	E100/350	22	15	P-11671-B
	BRAKE WHEEL CYLINDERS				
73/74	Front brake cylinder-typical	E100/300	21	8	P-1423
73/	Rear brake cylinder-typical	E100/350	21	8	P-1424
	FRONT and REAR BRAKES				
73/	Front and rear brakes--12" x 2 1/2" and 12" x 3"-BX Bendix	E250/350	21	2	P-5346
73/74	Front and rear brakes (self adjusting)-typical	E100/200	21	1	P-4827
75/	Front disc brake-single piston	E100/150	21	10	P-11561
75	Front disc brake-dual piston	E250/350	21	11	P-11427
76/	Front disc brake-dual piston	E250/350	21	13	P-13036
	PARKING BRAKES				
73/74	System (cable operated rear brakes)	E100/300	26	2	P-6367
75/77	System (cable operated rear brakes)-with 124" and 138" W/B	E100/150	26	15	P-11989
75/77	System (cable operated rear brakes)-with 138" and 158" W/B	E250/350	26	16	P-11990
78/	System (cable operated rear brakes)-with 124", 138" and 158" W/B	E100/350	26	19	P-14581
	SPARE WHEEL CARRIERS				
73/74	Spare wheel and jack stowage	E100/300	10	8	P-6338
75/	Jack stowage	E100/350	10	17	P-12141
75/	Spare wheel stowage-side mount (exc. Super Van/Wagon)	E100/350	10	15	P-12142
75/	Spare wheel stowage-side mount (exc. Super Van/Wagon)	E100/350	10	15	P-12142
78/	Spare wheel stowage-side mount (Super Van/Wagon)	E150/350	10	19	P-14590
75/	Spare wheel stowage-floor mount	E100/350	10	15	P-12143
75/77	Spare wheel-swing away	E100/350	10	18	P-14217
	WHEELS, HUBS and DRUMS				
73/	Front wheel hub and bearings-typical	E100/350	10	13	P-11137
75/	Rear wheel hub and bearings-typical	E1 0/350	10	16	P-12662
73/	Hub cap and wheel cover-refer to text group 1130	E100/350			

INDEX

YEAR 19__	TITLE	MODEL	SECTION	PAGE	ILLUS. NO.
	F SERIES				
	BRAKE BOOSTER INSTALLATION				
73/77	Brake booster (vacuum-dash mounted)--Gas	F500	23	1	P-5846
73	Brake booster (vacuum-dash mounted)-Bendix diaphragm type-master vacuum	F250-w/GVW over 6200--2/W/D	23	4	P-5844
73/77	Brake booster (vacuum-dash mounted)-w/reservoir tanks	F500	23	2	P-6527
73	Brake booster (vacuum-dash mounted)-Bendix diaphragm type	F100/250-w/GVW 6200 and under--2/W/D	23	3	P-9910
73/77	Brake booster (vacuum-frame mounted)	F500	22	10	P-8527
74/	Brake booster (vacuum-dash mounted)-Bendix diaphragm type-typical	F100/350-w/All GVW --2/W/D	23	11	P-11119
73/	Brake booster (vacuum-dash mounted)-Bendix diaphragm type	F100/350--4/W/D	23	13	P-11912
	BRAKE BOOSTER PARTS				
73/77	Brake booster (dual hydraulic vacuum)-Bendix	F500	23	9	P-6985
73/	Brake booster (vacuum-dash mounted)-Midland-Ross	F350	23	8	P-4143
73/77	Brake booster (vacuum-dash mounted)-Midland-Ross	F500	23	8	P-4143
	BRAKE and CLUTCH PEDALS				
73/77	Brake and clutch pedals	F500	72	6	P-5849
73/76	Brake and clutch pedals	F100/350	72	9	P-11462
77/	Clutch and brake pedal parts - Page A	F100/350	72	11	P-13375
	- Page B	F100/350	72	12	P-13376
	BRAKE MASTER CYLINDERS				
73/	Brake master cylinder-Bendix	F100/350	21	7	P-6999
73/77	Brake master cylinder (Wagner)-typical	F500	21	7	P-7019
73	Hydraulic brake system	F250/350--2/W/D-w/GVW over 6200	22	5	P-5672
73/75	Hydraulic brake system	F100--4/W/D	22	6	P-5673
73	Hydraulic brake system	F100/250--2/W/D-w/GVW 6200 and under	22	11	P-9909
	BRAKE SYSTEMS				
74/76	Hydraulic brake system-typical	F100/250--2/W/D-F350 w/All GVW	22	16	P-11118
73/75	Hydraulic brake system	F250--4/W/D	22	7	P-5674
76/	Hydraulic brake system	F100/150--4/W/D	22	18	P-13371
76/	Hydraulic brake system	F250/350--4/W/D	22	17	P-13370
77/	Hydraulic brake system (Page A)	F100/350--2/W/D	22	19	P-13373
77/	Hydraulic brake system (Page B)	F100/350--2/W/D	22	20	P-13374
73/77	Hydraulic brake system (rear)	F500	22	1	P-6519
73/77	Hydraulic vacuum brake system (dual)--w/dash mounted booster	F500	22	2	P-10872-A
73/77	Hydraulic vacuum brake system (dual)--w/dash mounted booster	F500	22	3	P-10872-B
73/77	Hydraulic vacuum brake system (single)--w/frame mounted booster	F500	22	10	P-8527
	BRAKE WHEEL CYLINDERS				
73/	Front brake cylinder (dual piston)-typical	F100/350	21	8	P-1423
73/77	Front brake cylinder (dual piston)-typical	F500	21	8	P-1423
73/	Rear brake cylinder (dual piston)-typical	F100/350	21	8	P-1424
73/77	Rear brake cylinder (dual piston)-typical	F500	21	8	P-1424

COPYRIGHT © 1979 — FORD MOTOR COMPANY —DEARBORN, MICHIGAN

INDEX

YEAR 19__	TITLE	MODEL	SECTION	PAGE	ILLUS. NO.
	F SERIES				
	FRONT and REAR BRAKES				
73/	Rear brakes--12" x 2 1/2" and 12" x 3"-BX Bendix	F250--2/W/D and F350	21	2	P-5346
73/74	Rear brakes-self adjusting-typical	F100--2/W/D	21	1	P-4827
73/75	Front disc brake-dual piston	F250/350-2/W/D	21	5	P-10587
76/	Front disc brake-dual piston	F250/350-2/W/D	21	13	P-13036
73/	Front disc brake-single piston	F100/250-2/W/D	21	6	P-9271
76/	Front disc brake and related parts-single piston	F100/150--4/W/D	21	12	P-12887
76/	Front disc brake--dual piston	F250/350--4/W/D	21	14	P-13310
73/77	Front brakes (single anchor self adjusting-hydraulic) --14" x 2 1/2" Kelsey Hayes	F500	21	4	P-8314
73/77	Rear brakes (self adjusting-hydraulic)--15" x 4" and 15" x 5" Kelsey Hayes	F500	21	4	P-6437
	PARKING BRAKES				
73/77	Parts (trans. internal shoe type)--9" x 2" and 9" x 3"	F350	26	1	P-2848
73/77	Parts (trans. interal shoe type)--9" x 2" and 9" x 3"	F500	26	1	P-2848
73/	System (cable operated rear brake)-Reg. Cab	F100/150	26	3	P-11046
73/	System (cable operated rear brake)-std brakes (w/equalizer lever)-Reg. Cab	F250--2/W/D	26	3	P-11046
73/77	System (cable operated rear brake)-H/D brakes (w/o equalizer lever)-Reg. Cab	F250--2/W/D	26	4	P-11047
73/77	System (cable operated rear brake)-Reg. Cab	F250--4/W/D	26	4	P-11047
78/	System (cable operated rear brake)-Reg. Cab	F250/350--2/W/D	26	17	P-14579
78/	System (cable operated rear brake)-Reg. Cab	F250/350--4/W/D	26	17	P-14579
74/77	System (cable operated rear brake)- Super Cab	F100/350--2/W/D F350	26	14	P-11233
78/	System (cable operated rear brake)-Super Cab	F100/350--2/W/D with 138" and 155" W/B	26	18	P-14580
78/	System (cable operated rear brake)-Super Cab	F150/350--4/W/D with 155" W/B	26	18	P-14580
73	System (trans. internal shoe type)-w/standard lever - manual trans.-"Before Ser. S00,001"	F500 (81)	26	11	P-11528
73/77	System (trans. internal shoe type)--w/standard lever-manual trans.-9" x 3"-"From Ser. S00,001"	F500 (81)	26	9	P-11042
73/77	System (trans. internal shoe type)-w/Orscheln lever-manual trans.-9" x 3" & 10" x 3"-From Ser. S00,001"	F500 (81)	26	8	P-11032
73	System (trans. internal shoe type)-w/Orscheln lever-manual trans.-"Before Ser. S00,001"	F500 (84)	26	7	P-6998
73/77	System (trans. internal shoe type)-w/Orscheln lever-"From Ser. S00,001"	F500 (84)	26	12	P-11251
73	System (trans. internal shoe type)--9" x 3" with Ford C6 trans.-"Before Ser. S00,001"	F500 (84)	26	10	P-10680

INDEX

YEAR 19__	TITLE	MODEL	SECTION	PAGE	ILLUS. NO.
	F SERIES				
	SPARE WHEEL CARRIERS				
78/	Jack Stowage	F100/350	10	20	P-14915
73/	Spare wheel carrier (side mounted)	F100/250(83)	10	10	P-2602
73/	Spare wheel carrier (side mounted)	F350(83)	10	12	P-2603
73/	Spare wheel carrier (side mounted)	F100/250(99)	10	10	P-5740
73/	Spare wheel carrier (frame mounted)	F100/250--2/W/D and F100--4/W/D	10	11	P-9911
73/	Spare wheel carrier (frame mounted)	F250--4/W/D and F350--exc. 140" W/B	10	11	P-9912
73/	Spare wheel carrier (side mounted)	F250/350(99)--140" W/B	10	12	P-9913
73/	Spare wheel carrier (frame mounted-slide out)	F100/250--2/W/D and 4/W/D and F350 (Super Cab)	10	9	P-9914
73/	Spare wheel carrier	F250 (Crew Cab)	10	17	P-13366
73/77	Spare wheel carrier (frame mounted)	F500	10	7	P-9922
	WHEEL, HUBS and DRUMS				
73/	Front wheel (disc type-tube tires)-typical	F350	10	4	P-1384
73/77	Front wheel parts (w/two piece wheel)	F500	10	3	P-649
73/	Front wheel drive hub lock parts (3M front axle)-Dana (Spicer)	F100/250--4/W/D	10	5	P-7800
78/	Front wheel drive hub lock parts (D8TZ 1104-E kit)-Dana (Spicer)	F150/350--4/W/D	10	18	P-14457
78/	Front wheel drive hub lock parts (D8TZ 1104-F kit)-Dana (Spicer)	F150/350--4/W/D	10	19	P-14458
73/75	Front wheel drive non-locking (3M front axle)-typical	F100/150--4/W/D	10	7	P-8903
73/77	Front wheel drive hub lock parts (3.5M front axle)-Dana (Spicer)	F250--4/W/D	10	4	P-8746
79	Front wheel drive hub lock parts (D9TZ 1104-A kit) - Warn	F150/350	10	20	P-14976
73/	Front wheel parts	F250/350	10	1	P-1382
73/77	Front wheel parts (exc. disc type)	F500	10	2	P-2004
73/	Front wheel parts (dual rear wheel)-typical	F350	10	2	P-2003
73/	Front wheel parts-typical	F100	10	1	P-1381
73/	Hub cap and wheel cover-refer to text group 1130	F100/350			
73/	Rear dual wheel parts (disc type-tubeless tires)-typical	F350	10	3	P-2474
73/77	Rear wheel hubs and bearings	F500	10	6	P-8750
	M SERIES				
	Refer to "P" Series for Illustrations not listed below				
	BRAKE BOOSTER PARTS				
73/76	Brake booster (vacuum-12 3/4 Bendix diaphragm type)	M450/500	23	12	P-11526
	BRAKE MASTER CYLINDER				
73/76	Brake master cylinder (Wagner)-typical	M450/500	21	7	P-7019
	BRAKE PEDAL				
73/76	Brake pedal	M450/500	72	8	P-11389
	BRAKE SYSTEMS				
73/76	Hydraulic system-front frame	M450/500	22	12	P-12042-A
73/76	Hydraulic system-rear frame	M450/500	22	13	P-12042-B
73/76	Hydraulic system-rear axle	M450/500	22	1	P-11616
	BRAKE WHEEL CYLINDERS				
73/76	Refer to "P" Series for illustration	M450/500			

COPYRIGHT © 1979 — FORD MOTOR COMPANY —DEARBORN, MICHIGAN

INDEX

YEAR 19__	TITLE	MODEL	SECTION	PAGE	ILLUS. NO.
	M SERIES				
	Refer to "P" Series for Illustrations not listed below				
	FRONT and REAR BRAKES				
73/76	Front brakes (single anchor self adjusting-hydraulic)--14" x 2 1/2" Kelsey Hayes	M450/500	21	4	P-8314
73/76	Rear brakes (self adjusting-hydraulic)--15" x 4" and 15" x 5"-Kelsey Hayes	M450/500	21	4	P-6437
	PARKING BRAKES				
73/76	System (trans. internal shoe type)-w/Orscheln lever	M450/500	26	13	P-12844
	WHEELS, HUBS and DRUMS				
73/76	Rear wheel hubs, bearings	M450/500	10	6	P-8750
	P SERIES				
	BRAKE BOOSTER INSTALLATION				
73/76	Brake booster (vacuum-dash mounted)	P350/400	23	6	P-6495
73/76	Brake booster (vacuum-frame mounted)	P350/400	23	5	P-5241
73/77	Brake booster (vacuum diaphragm-frame mounted)	P500	23	10	P-8731
76/77	Brake booster (vacuum-frame mounted)	P500	23	5	P-5241
	BRAKE BOOSTER PARTS				
73/77	Brake booster (dual hydraulic vacuum)-Bendix	P350/400	23	9	P-6985
73/77	Brake booster (vacuum-dash mounted)-Midland-Ross	P500	23	8	P-4143
	BRAKE and CLUTCH PEDALS				
73/77	Brake and clutch pedals	P500	72	7	P-11161
	BRAKE MASTER CYLINDER				
73/77	Brake master cylinder-Bendix	P350/500	21	7	P-6999
	BRAKE SYSTEMS				
73/77	Hydraulic brake system	P350/400	22	9	P-6494
73/77	Hydraulic brake system	P500	22	8	P-5240
	BRAKE WHEEL CYLINDERS				
73/77	Front brake cylinder (dual piston)-typical	P350/500	21	8	P-1423
73/77	Front brake cylinder (single piston)-typical	P500	21	9	P-11586
73/77	Rear brake cylinder (dual piston)-typical	P350/500	21	8	P-1424
	FRONT and REAR BRAKES				
73/77	Front and rear brakes--12" x 2 1/2" and 12" x 3"-BX Bendix	P350/400	21	2	P-5346
73/77	Front brake-typical	P500	21	3	P-3718
73/77	Rear brake-typical	P500	21	3	P-3719
	PARKING BRAKES				
73/76	Parts (trans. internal shoe type)--9" x 2" and 9" x 3"	P350/500	26	1	P-2848
73/76	System (trans. internal shoe type)	P350/400--4/M/T	26	6	P-11041
73/76	System (trans. external band type)	P350/400--3/M/T and A/T	26	5	P-11040
73/77	System (trans. external band type)	P500--3/M/T and A/T	26	5	P-11040
73/77	System (trans. internal shoe type)	P500--4/M/T	26	6	P-11041
	SPARE WHEEL CARRIERS				
73/77	Spare wheel carrier (frame mounted)	P350/500	10	14	P-9921
	WHEEL, HUBS and DRUMS				
73/77	Front wheel parts (w/two piece wheel)	P500	10	3	P-649
73/77	Front wheels	P500	10	2	P-2004
73/77	Front wheels-typical	P350/400	10	1	P-1382
73/77	Hub cap and wheel cover-refer to text group 1130	P350/400			
73/77	Rear dual wheel parts (disc type-tubeless tires)-typical	P350/500	10	3	P-2474

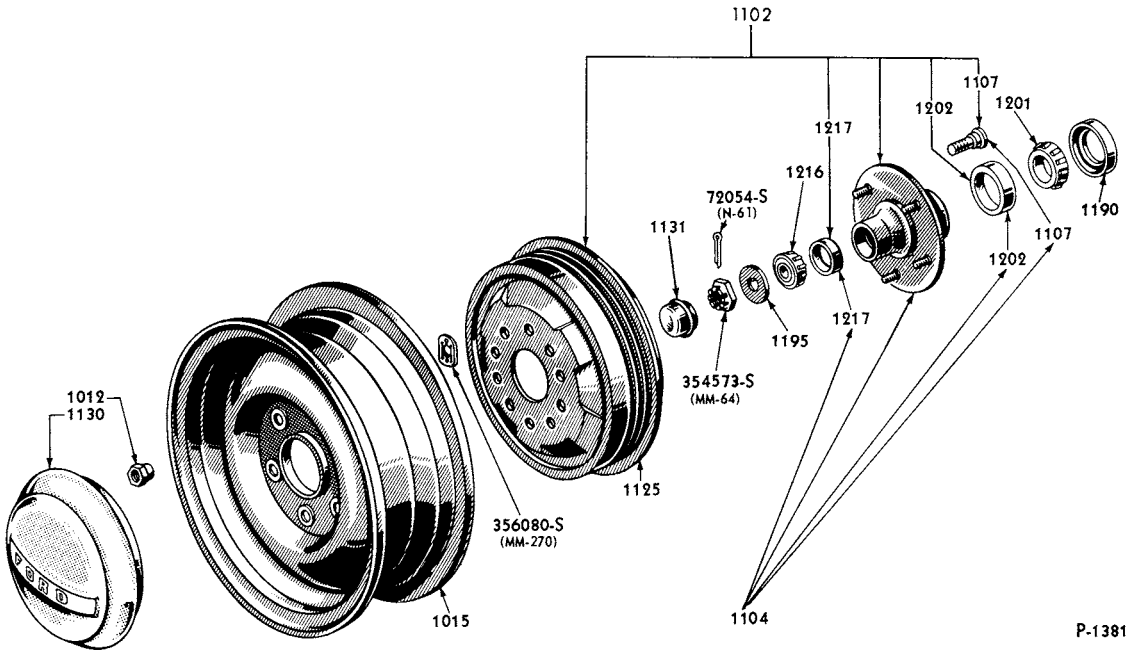

FRONT WHEEL PARTS-TYPICAL
1973/ F100

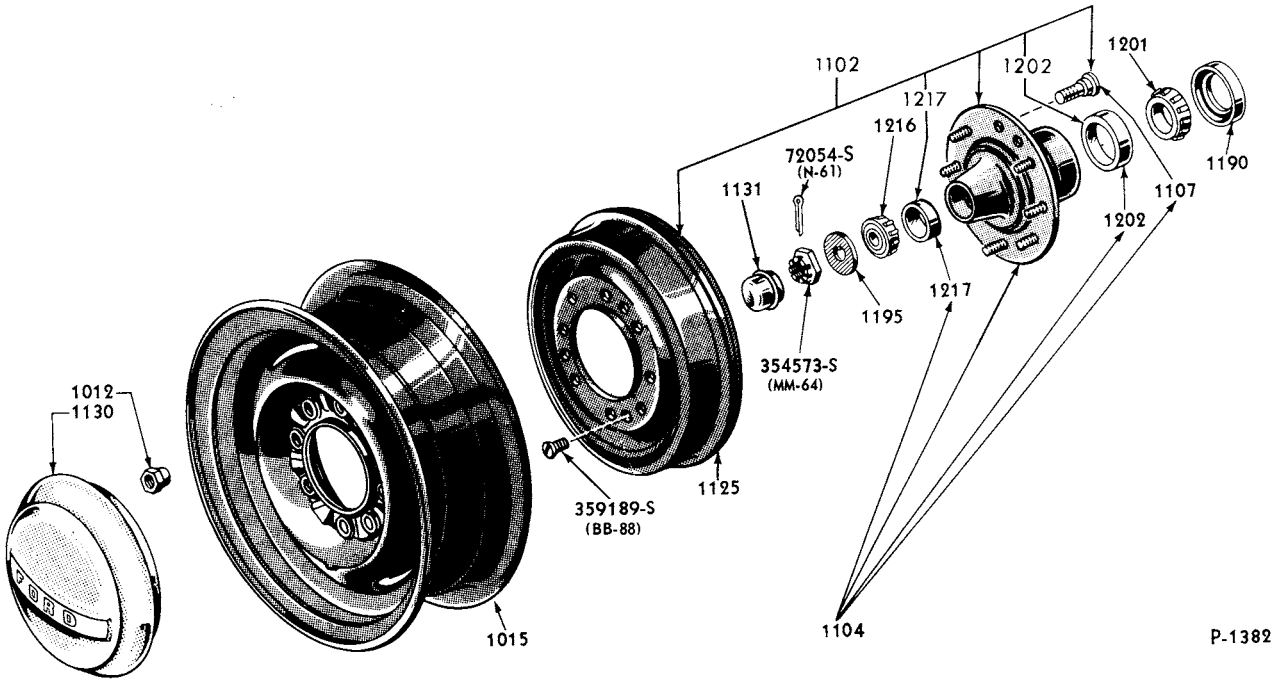

FRONT WHEEL PARTS-TYPICAL
1973/ F250/350 and 1973/77 P350/400

COPYRIGHT © 1979 FORD MOTOR COMPANY, DEARBORN, MICHIGAN

1973/79 TRUCK SERIES 100/500

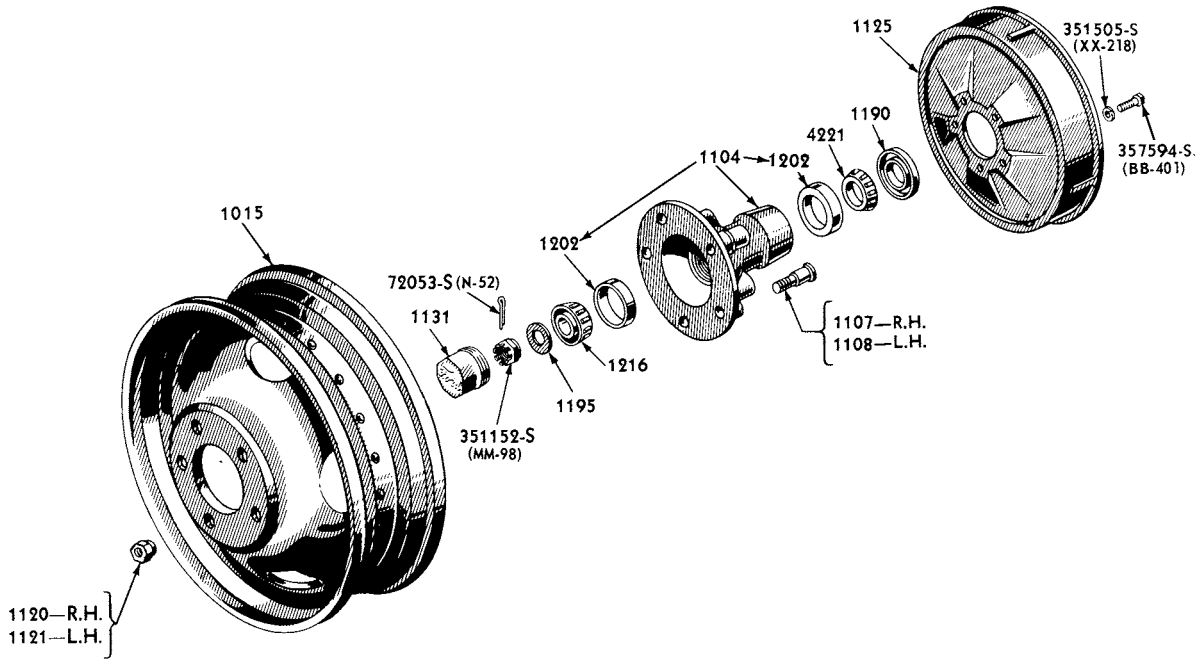

FRONT WHEEL PARTS (ONE PIECE WHEEL)
1973/77 B-F-P500

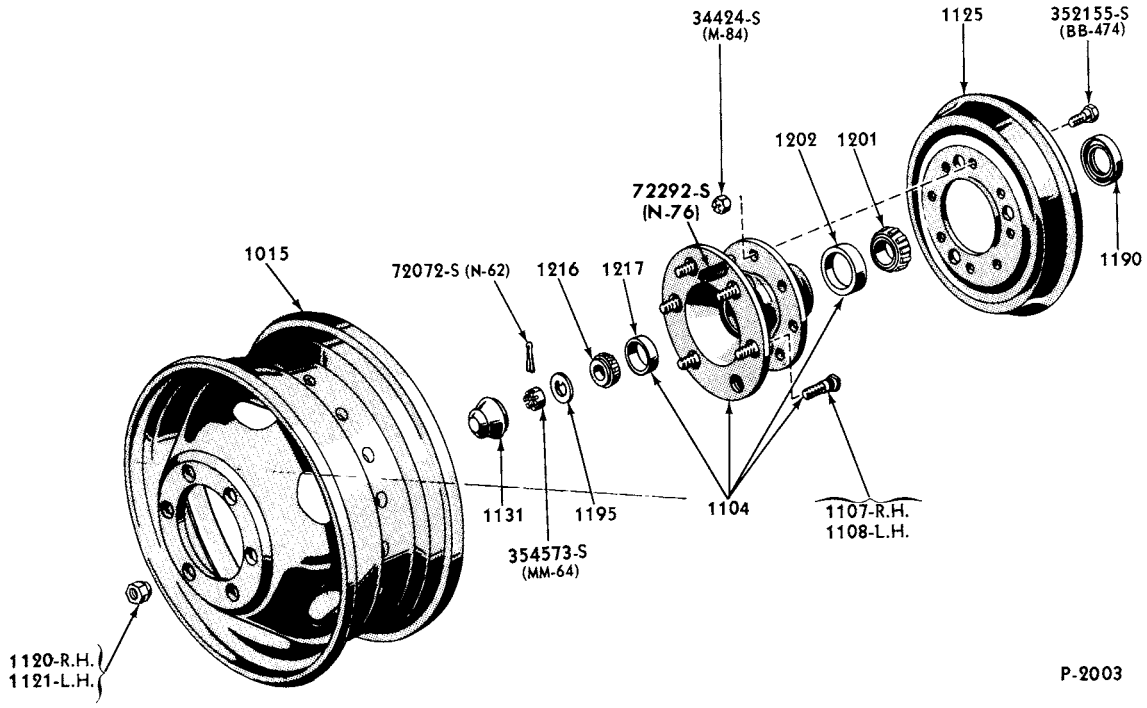

FRONT WHEEL PARTS (DUAL REAR WHEEL)-TYPICAL
1973/ F350

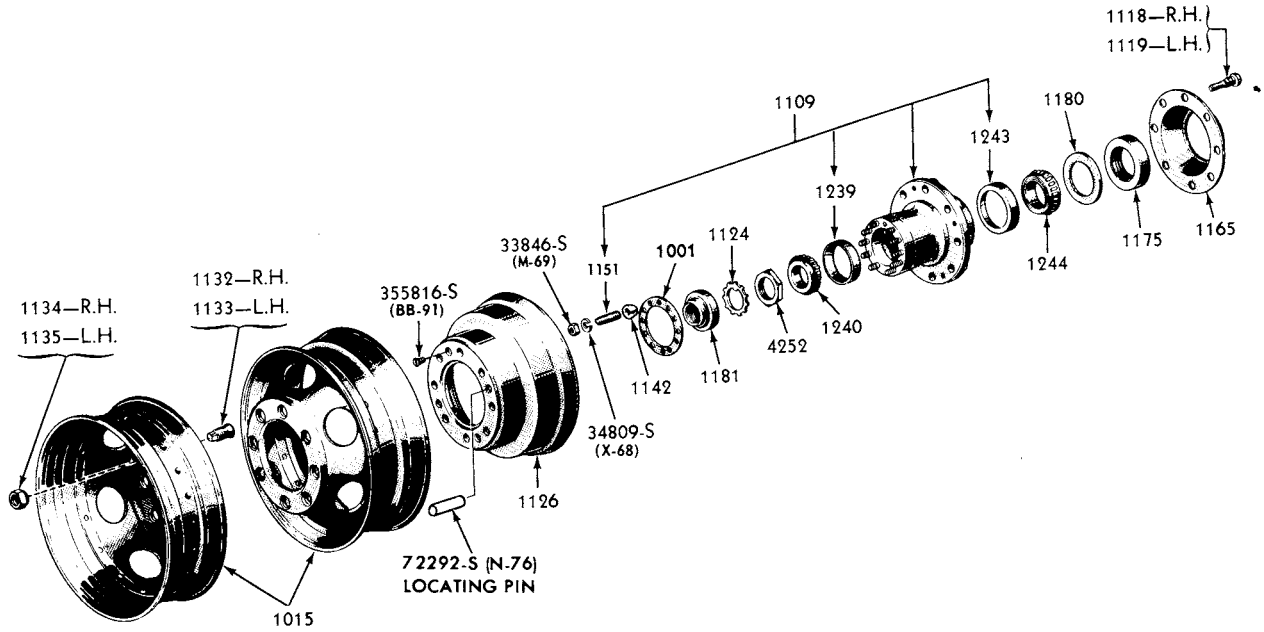

REAR DUAL WHEEL PARTS (DISC TYPE-TUBELESS TIRES)-TYPICAL
1973/ F350 and 1973/77 P350/500

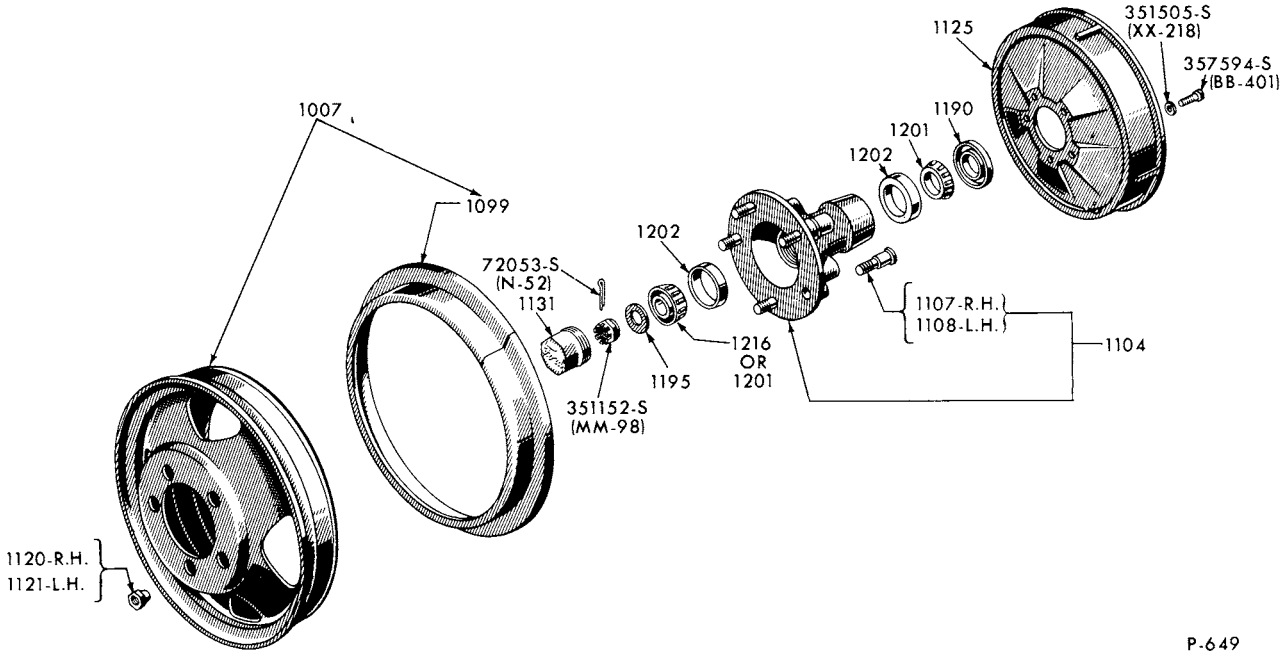

FRONT WHEEL PARTS (TWO PIECE WHEEL)-TYPICAL
1973/77 B-F-P500

COPYRIGHT © 1979 FORD MOTOR COMPANY—DEARBORN, MICHIGAN

1973/79 TRUCK SERIES 100/500

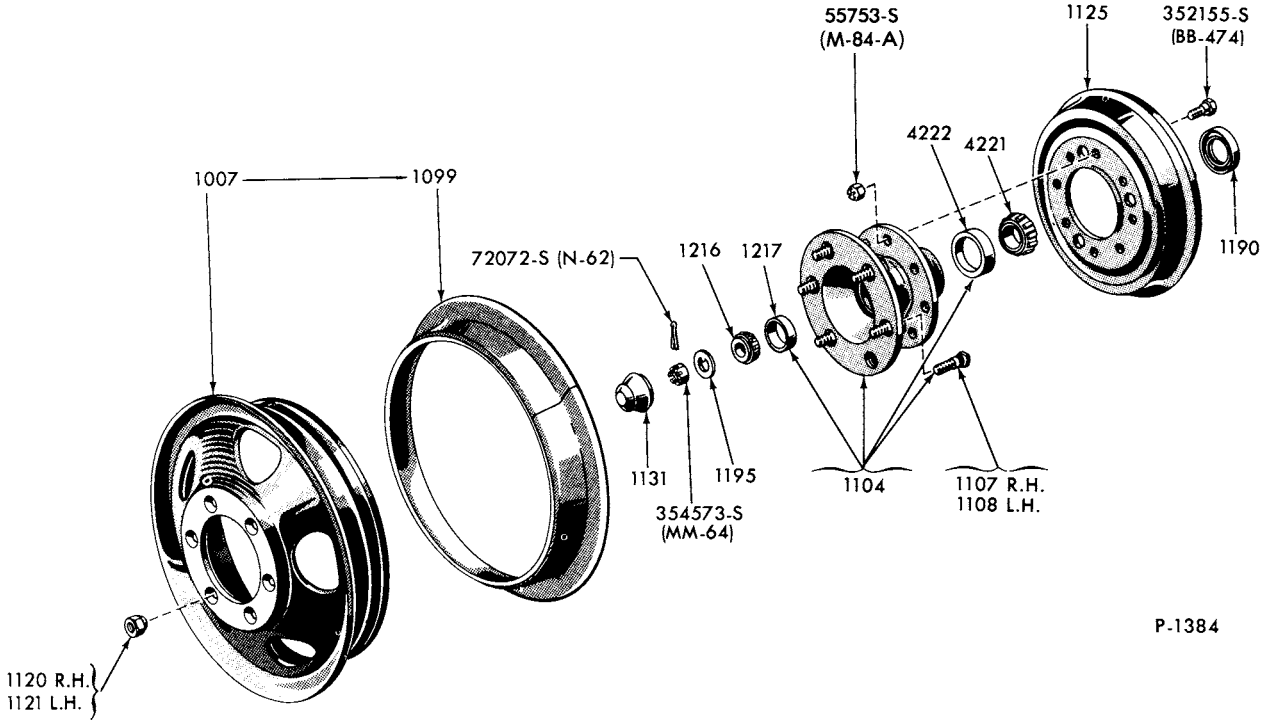

FRONT WHEEL PARTS (DISC TYPE-TUBE TIRES)-TYPICAL
1973/ F350

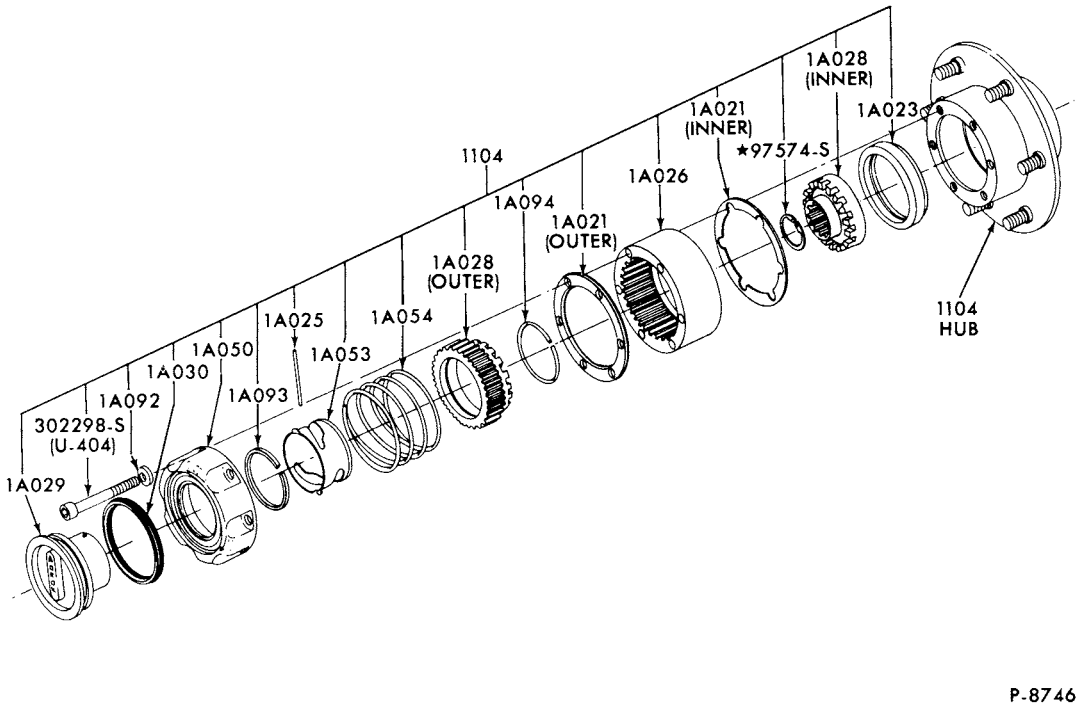

FRONT WHEEL DRIVE LOCK-OUT HUB (EXTERNAL TYPE)
1973/77 F250--4/W/D and 3.5M FRONT AXLE

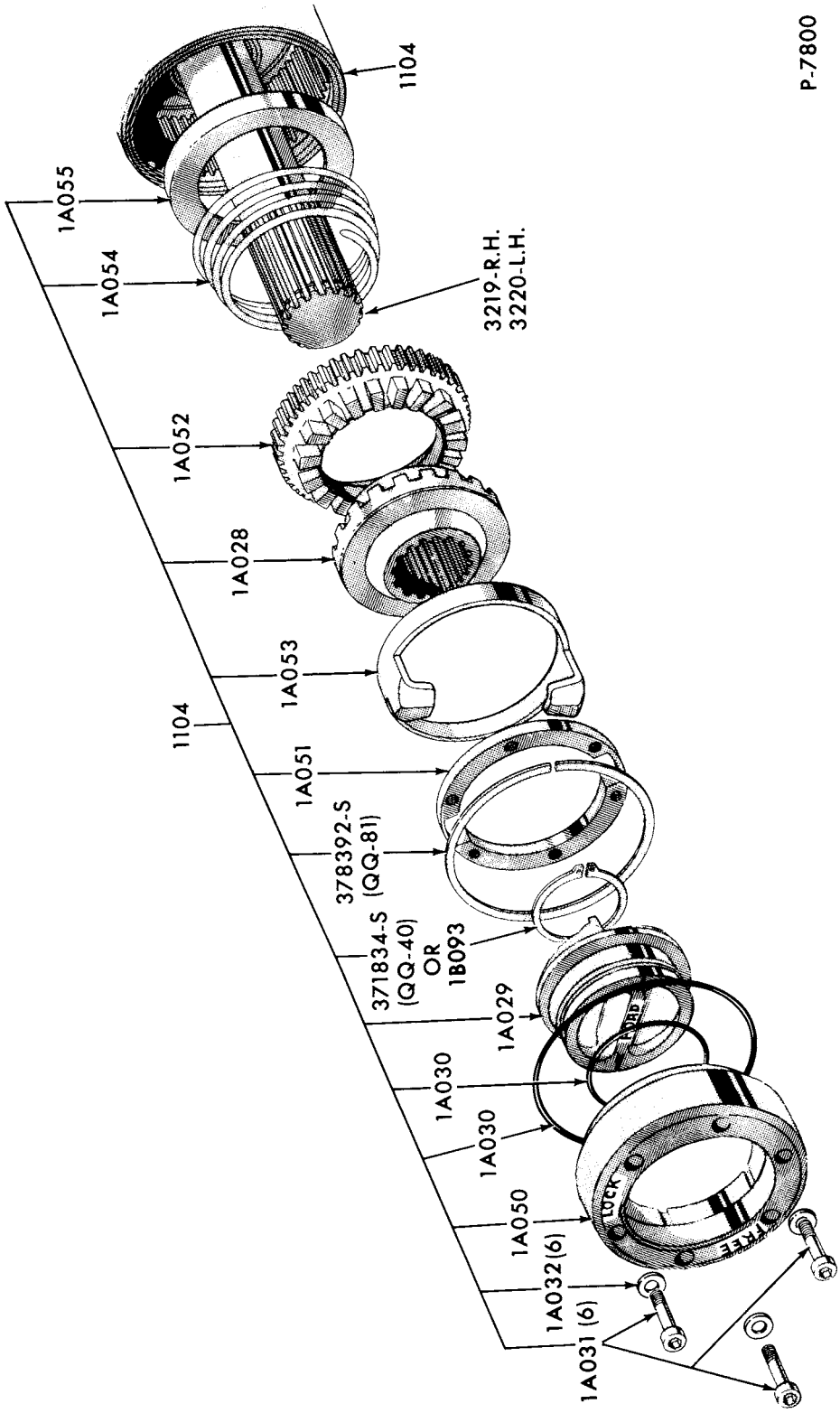

FRONT WHEEL DRIVE HUB LOCK - DANA (SPICER)
1973/77 F100/250--4/W/D and 3M, 3.3M FRONT AXLES

COPYRIGHT © 1979 FORD MOTOR COMPANY DEARBORN, MICHIGAN

1973/79 TRUCK SERIES 100/500

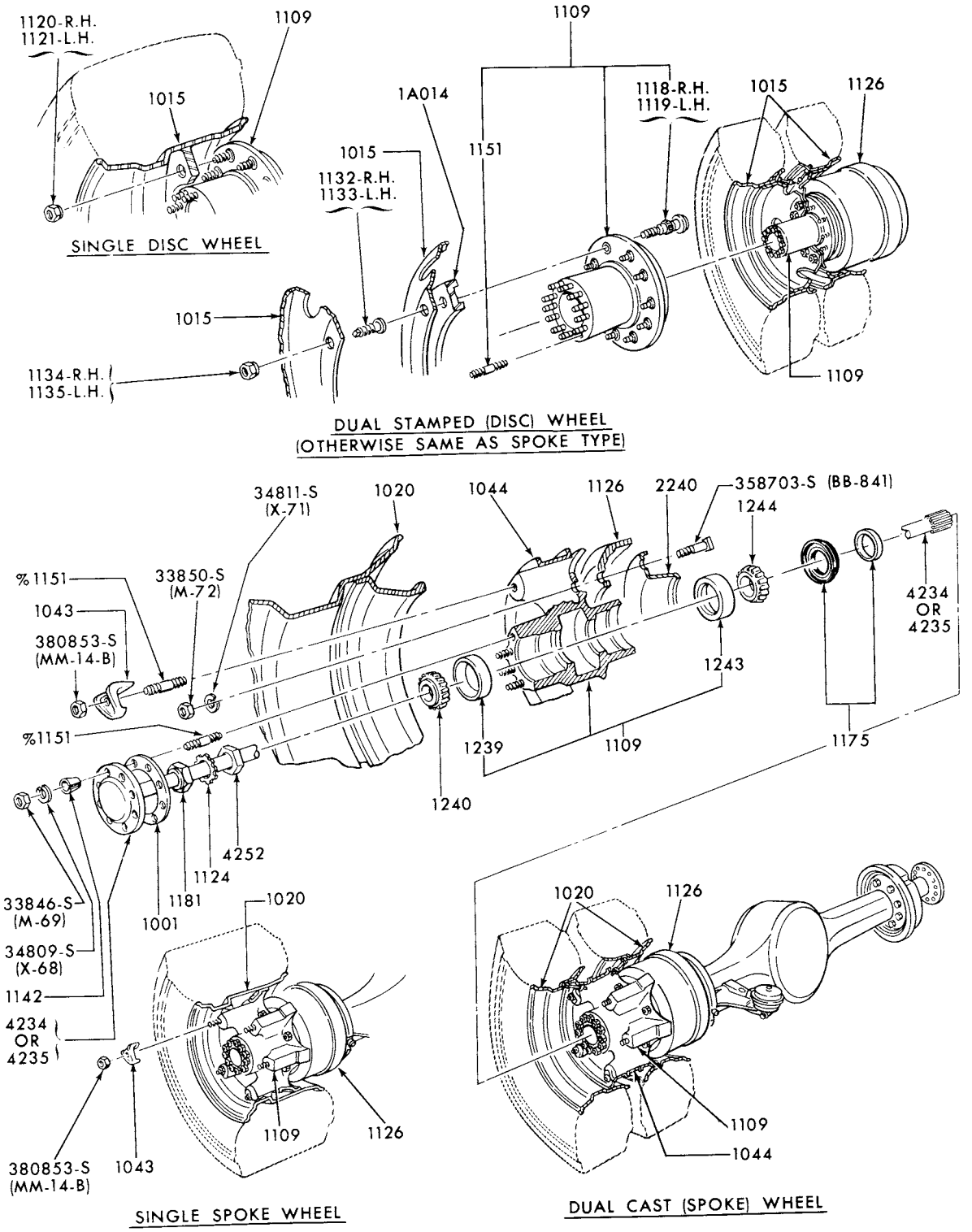

% ALSO SERVICED IN ASSY. - GROUP 1109

P-8750

REAR WHEEL HUBS, BEARINGS and RELATED PARTS
1973/77 B-F500 and 1973/76 M450/500

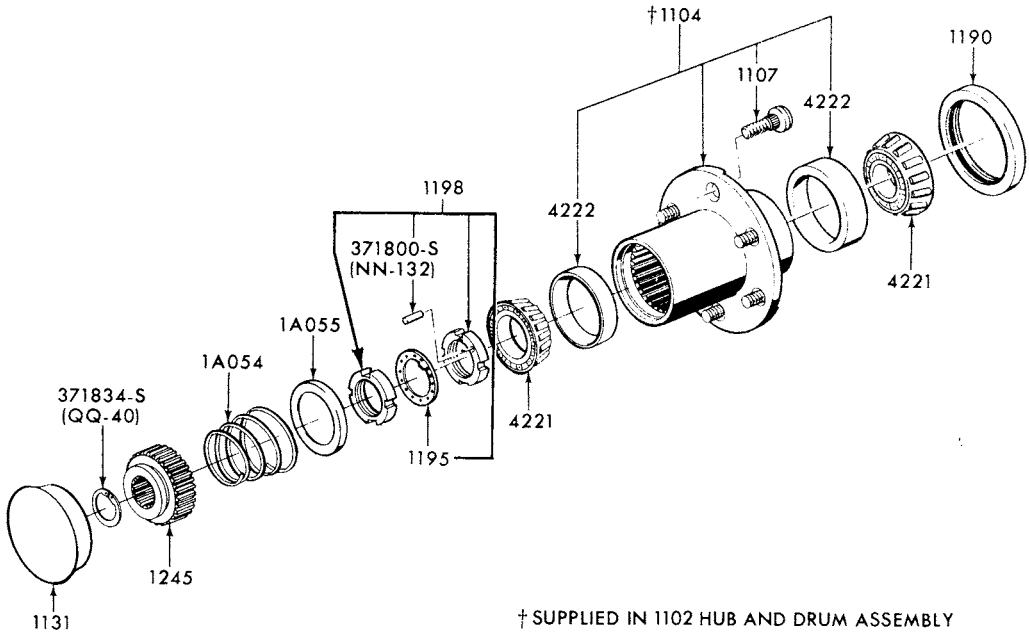

P-8903

FRONT WHEEL DRIVE (NON-LOCKING HUB)-TYPICAL
1973/75 F100/150--4/W/D and 3M FRONT AXLE

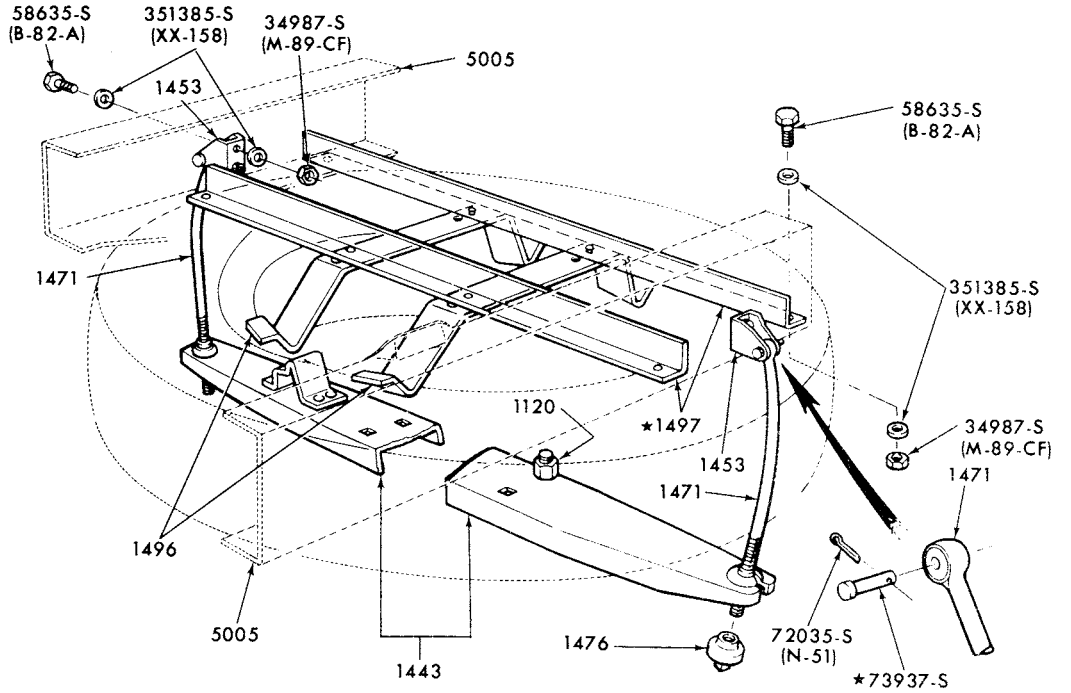

P-9922

SPARE WHEEL CARRIER (FRAME-MOUNTED)
1973/77 B-F500

COPYRIGHT © 1980— FORD MOTOR COMPANY —DEARBORN, MICHIGAN

1973/79 TRUCK SERIES 100/500

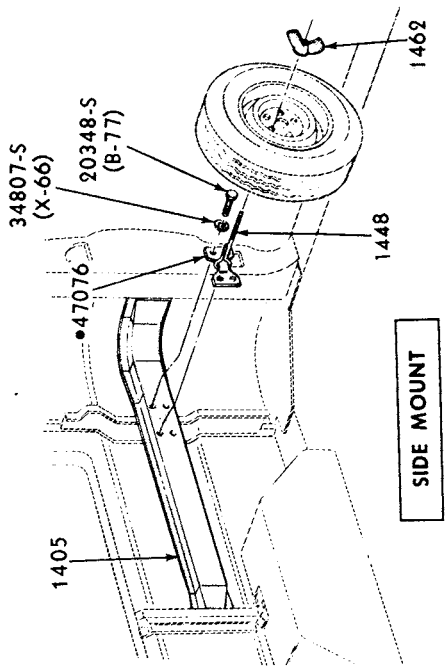

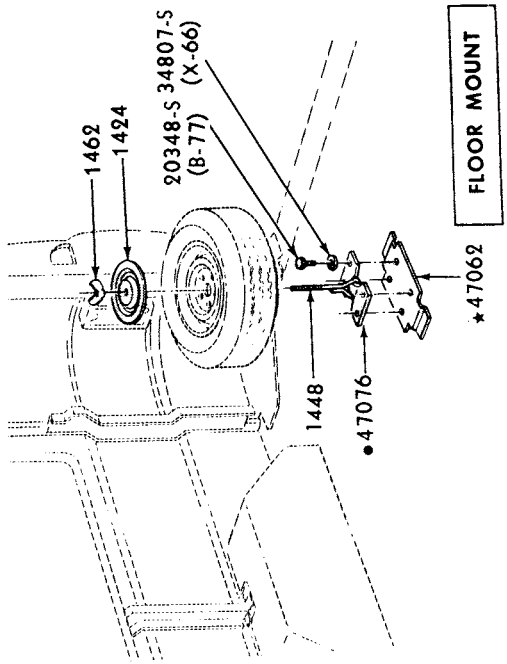

P-6338

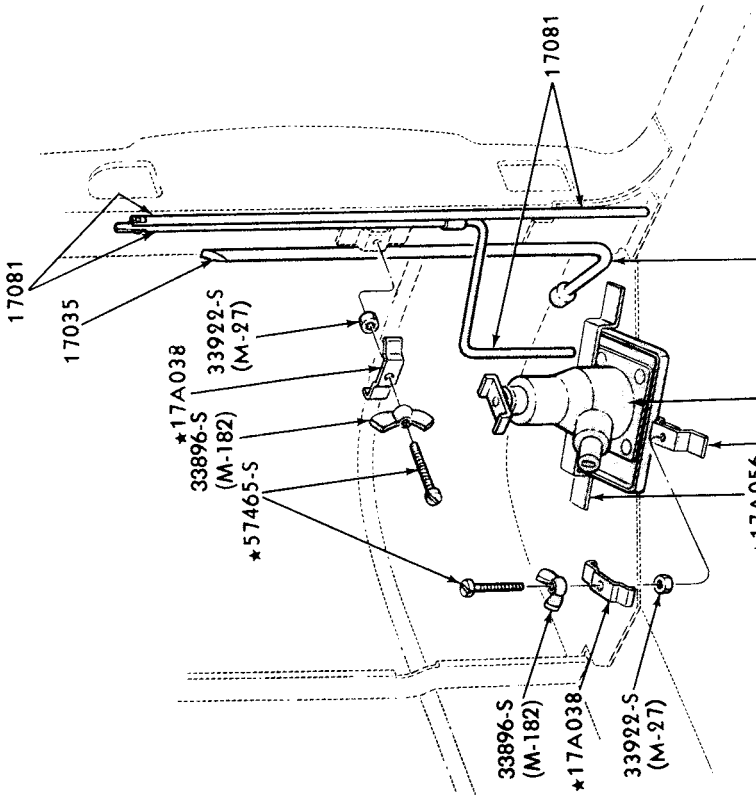

• REFER TO BODY SECTION

SPARE WHEEL and JACK STOWAGE
1973/74 E100/300

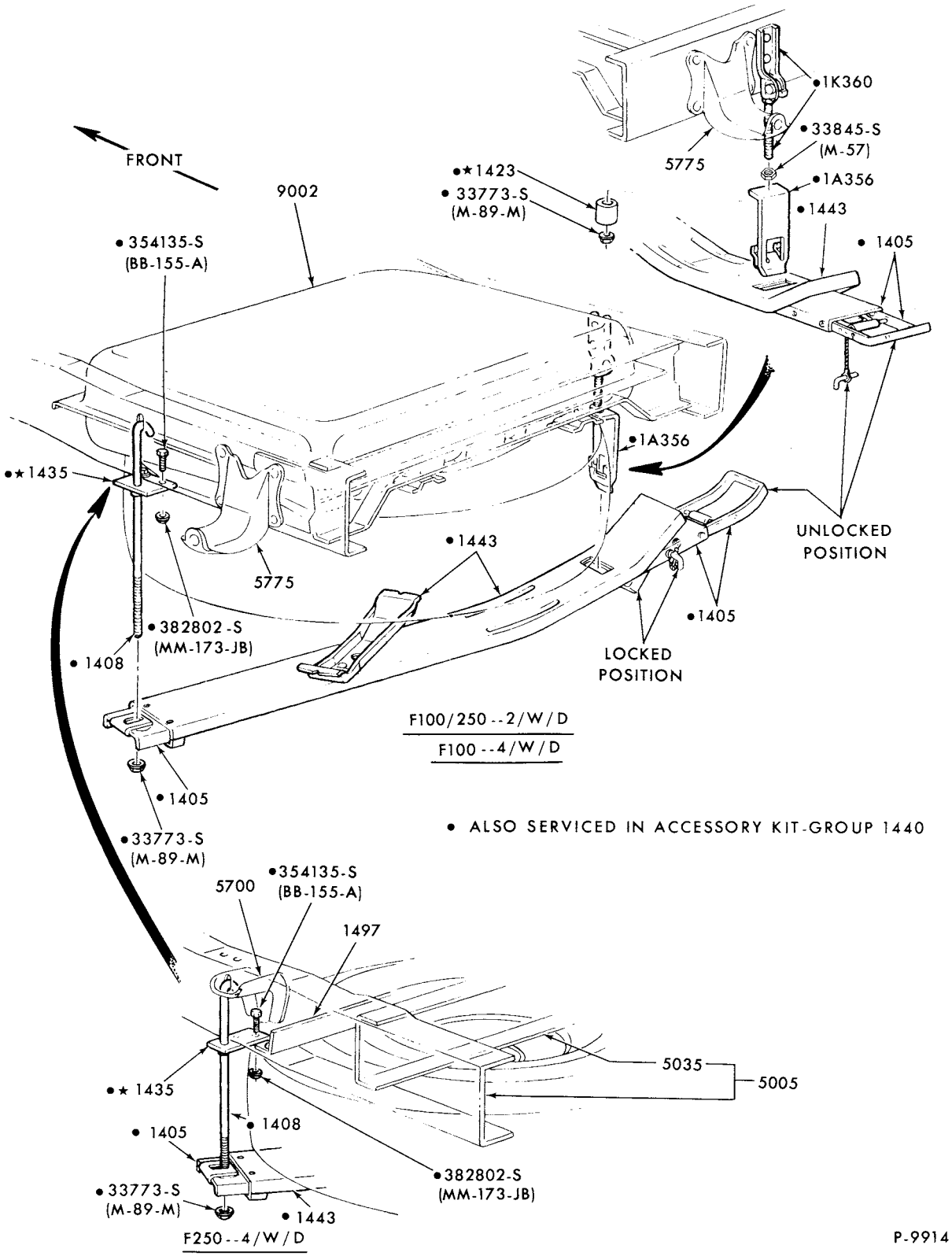

SPARE WHEEL CARRIER (FRAME MOUNTED-SLIDE OUT)
1973/ F100/250 and F350 SUPERCAB

COPYRIGHT © 1979 FORD MOTOR COMPANY, DEARBORN, MICHIGAN

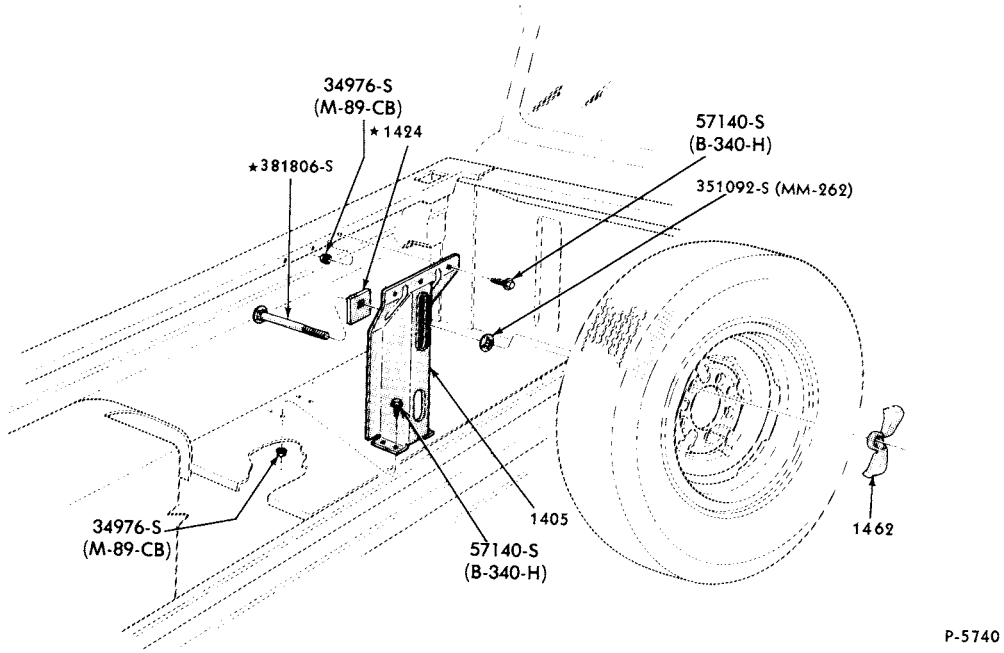

SPARE WHEEL CARRIER (SIDE MOUNTED)
1973/ F100/350--w/STYLE SIDE PICKUP BOX EXC. 140" W/B

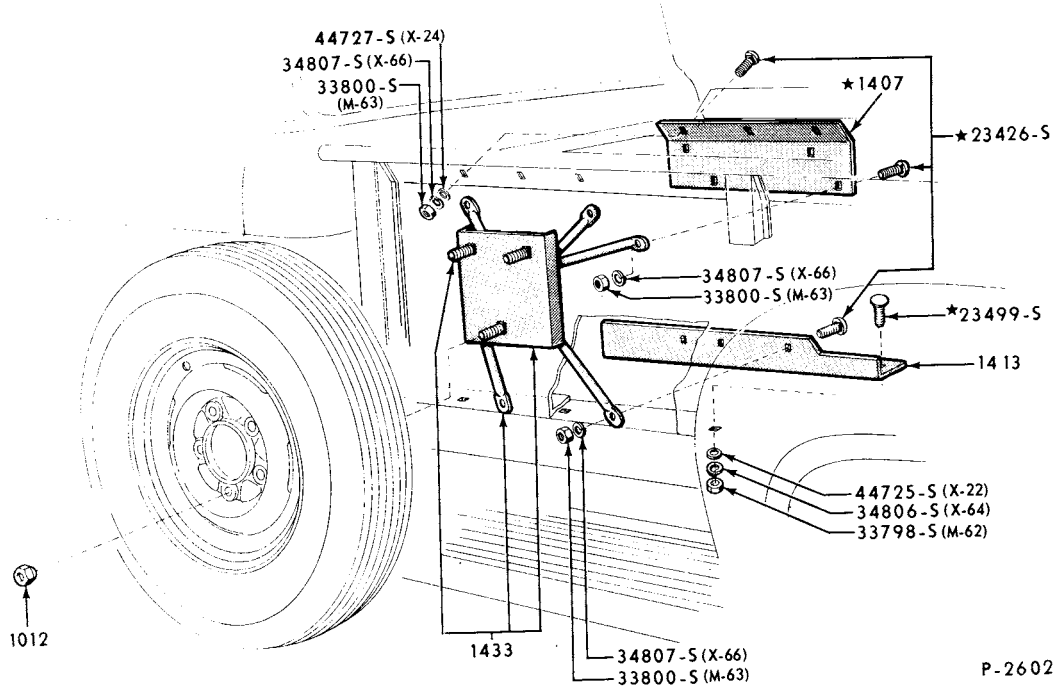

SPARE WHEEL CARRIER (SIDE MOUNTED)
1973/ F100/250--w/FLARE SIDE PICKUP BOX

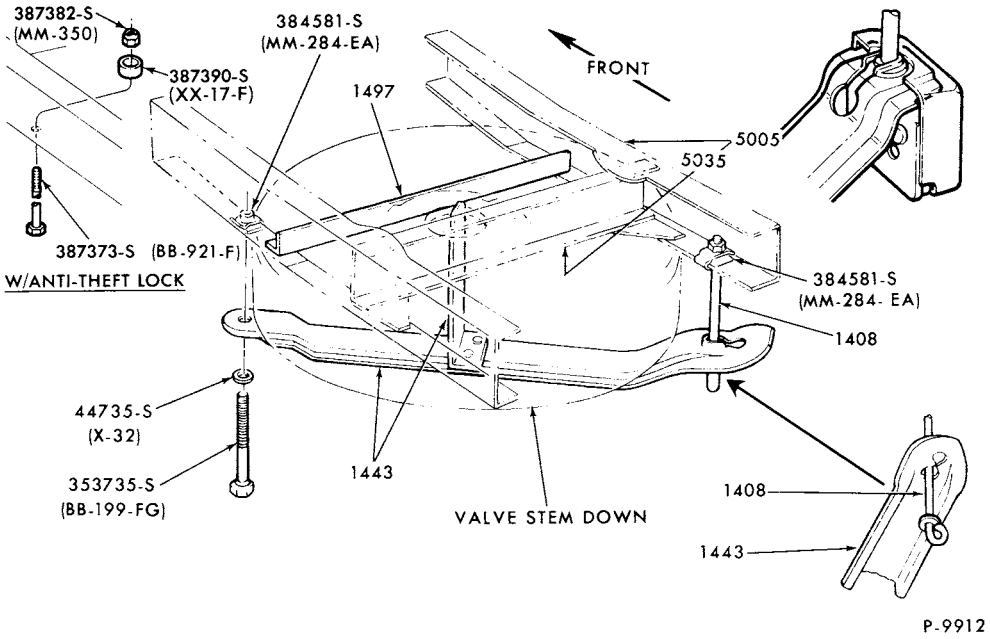

SPARE WHEEL CARRIER (FRAME MOUNTED)
1973/ F250--4/W/D and F350--EXC. 140" W/B

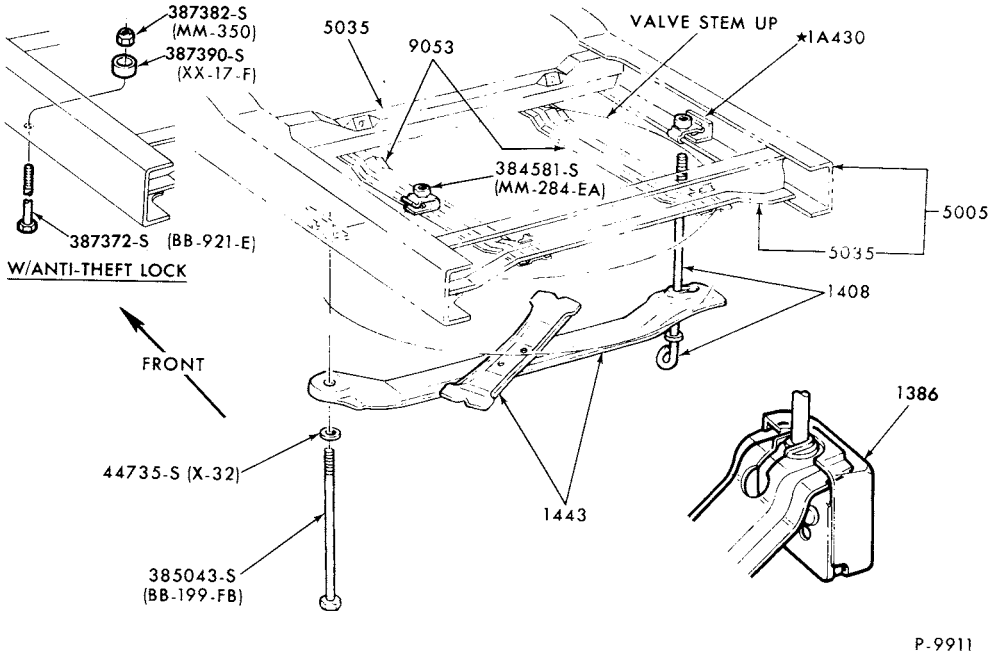

SPARE WHEEL CARRIER (FRAME MOUNTED)
1973/ F100/150--2/W/D and 4/W/D and F250--2/W/D

COPYRIGHT © 1979 — FORD MOTOR COMPANY, DEARBORN, MICHIGAN

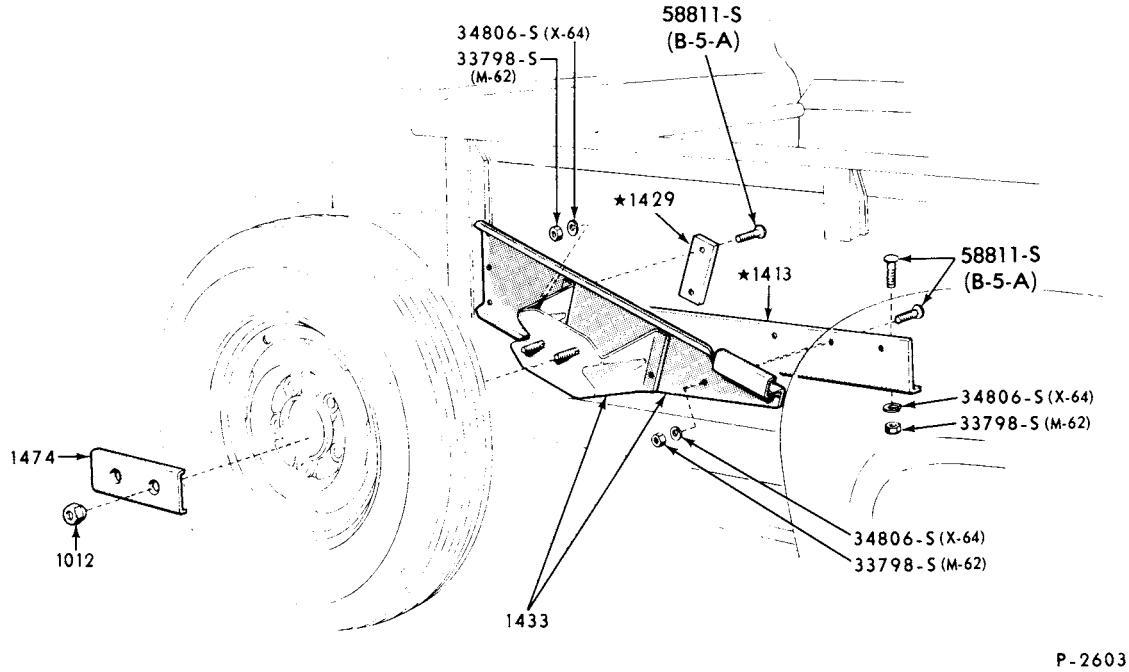

SPARE WHEEL CARRIER (SIDE MOUNTED)
1973/ F350--w/FLARE SIDE PICKUP BOX

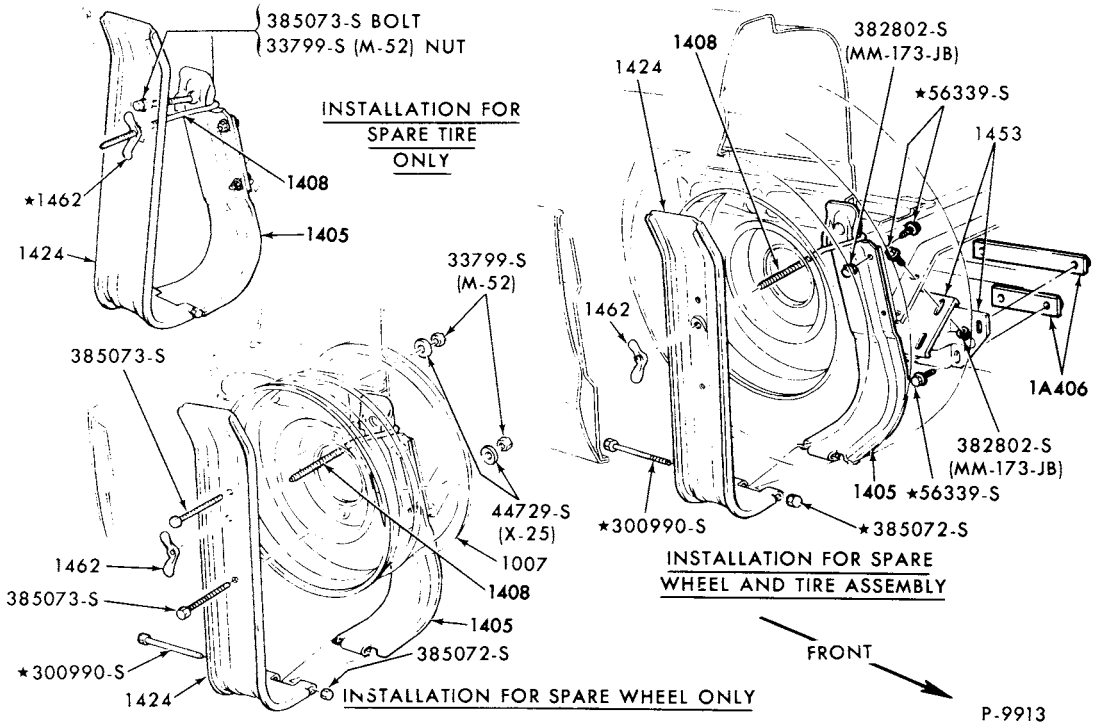

SPARE WHEEL CARRIER (SIDE MOUNTED)
1973/ F250 and F350--w/STYLE SIDE PICKUP BOX and 140" W/B

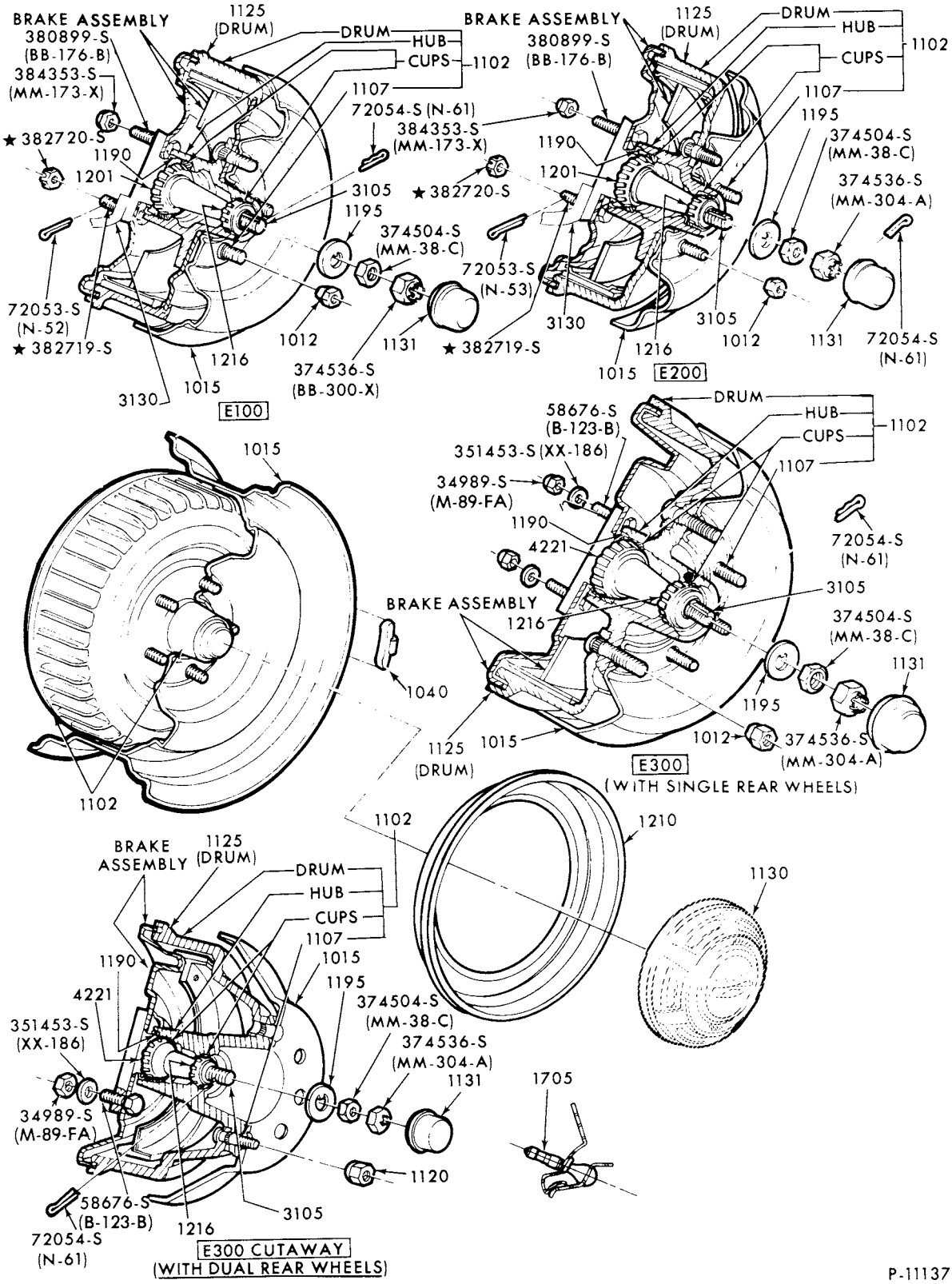

FRONT WHEEL HUB, BEARINGS and RELATED PARTS
1973/ E100/350

COPYRIGHT © 1979 FORD MOTOR COMPANY, DEARBORN, MICHIGAN

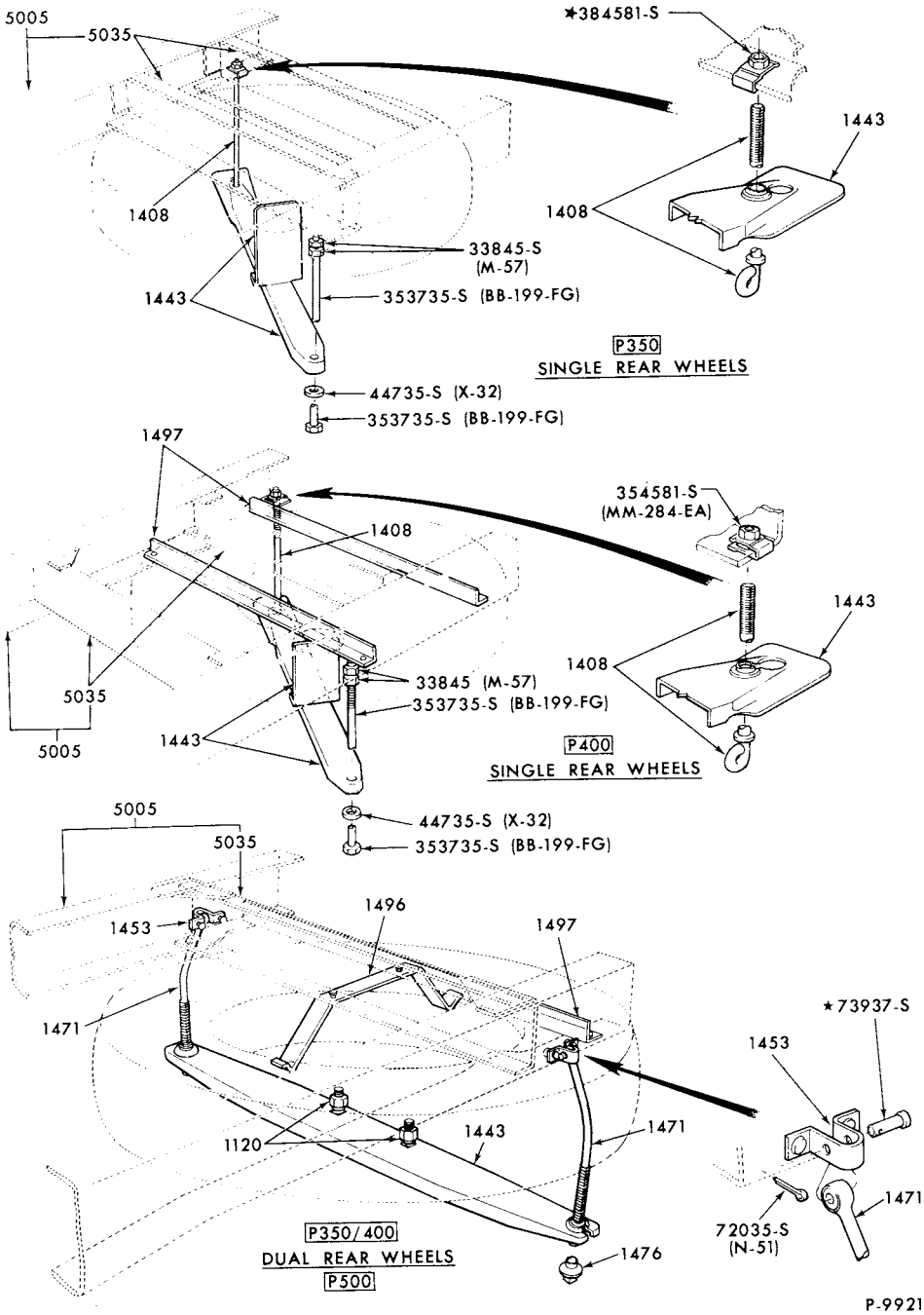

SPARE WHEEL CARRIER (FRAME MOUNTED)
1973/77 P350/500

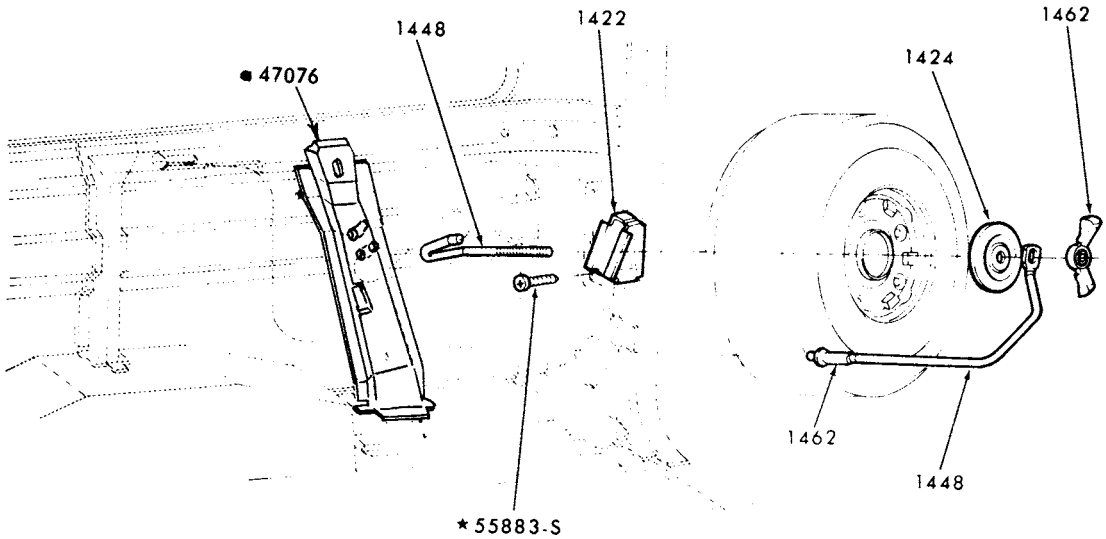

•REFER TO GROUP IN BODY SECTION

SIDE MOUNTED

P-12142

SPARE WHEEL STOWAGE
1975/ E100/350--SIDE MOUNT (EXC. SUPER VAN/WAGON)

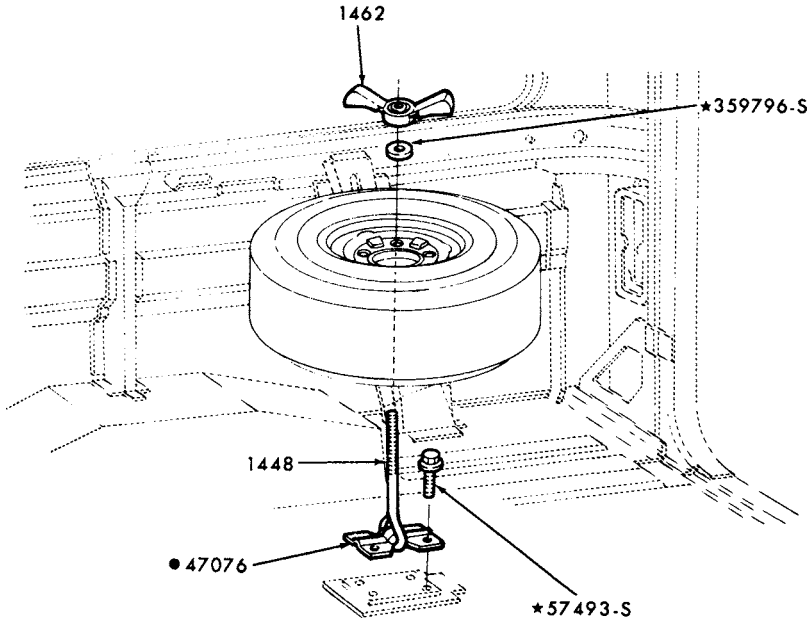

FLOOR MOUNTED

• REFER TO GROUP IN BODY SECTION

P-12143

SPARE WHEEL STOWAGE
1975/ E100/350--FLOOR MOUNT

COPYRIGHT © 1980 -FORD MOTOR-DEARBORN, MICHIGAN COMPANY

1973/79
TRUCK SERIES 100/500

P-12662

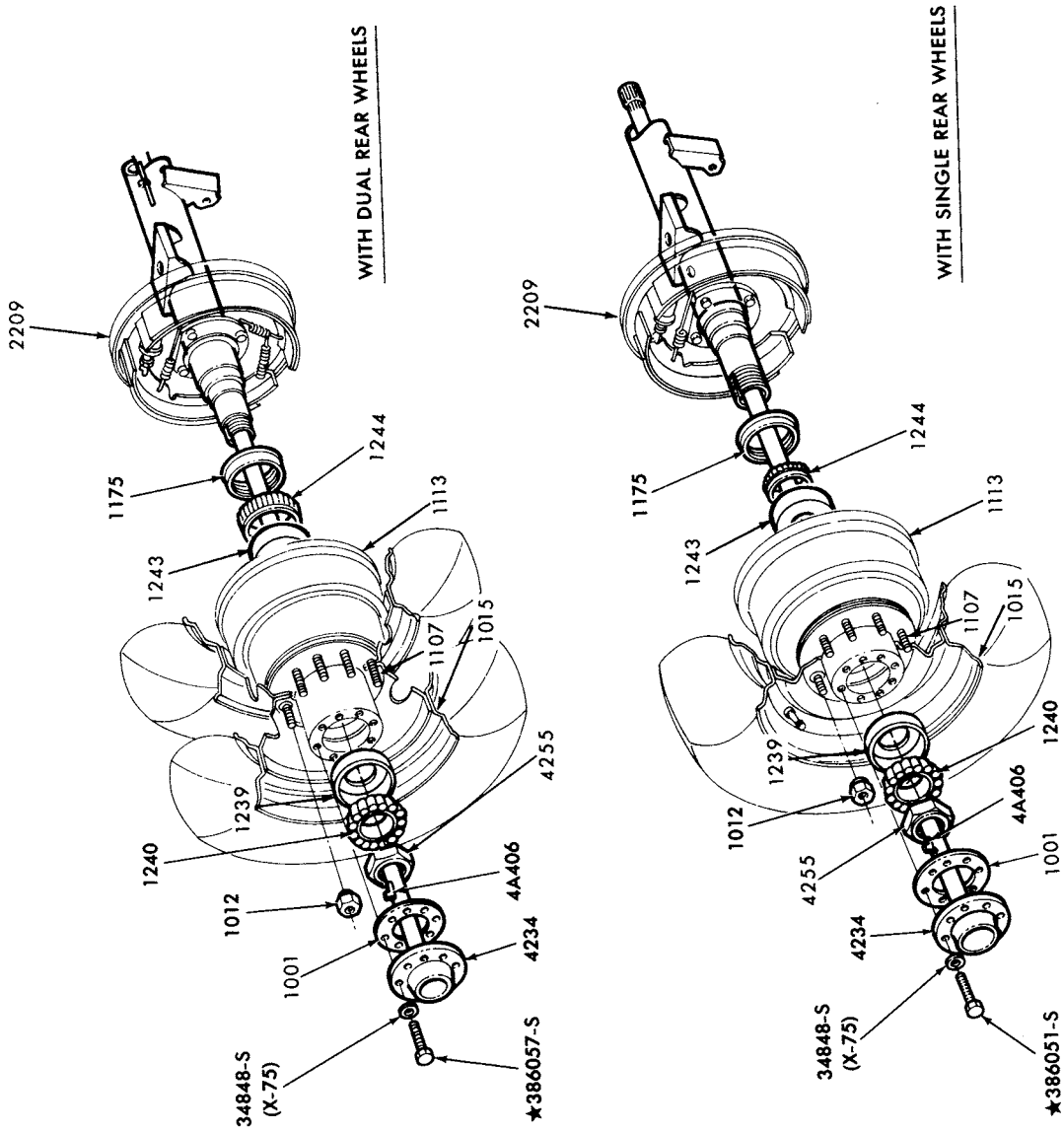

REAR WHEEL HUB, BEARINGS and RELATED PARTS
1975/ E100/350

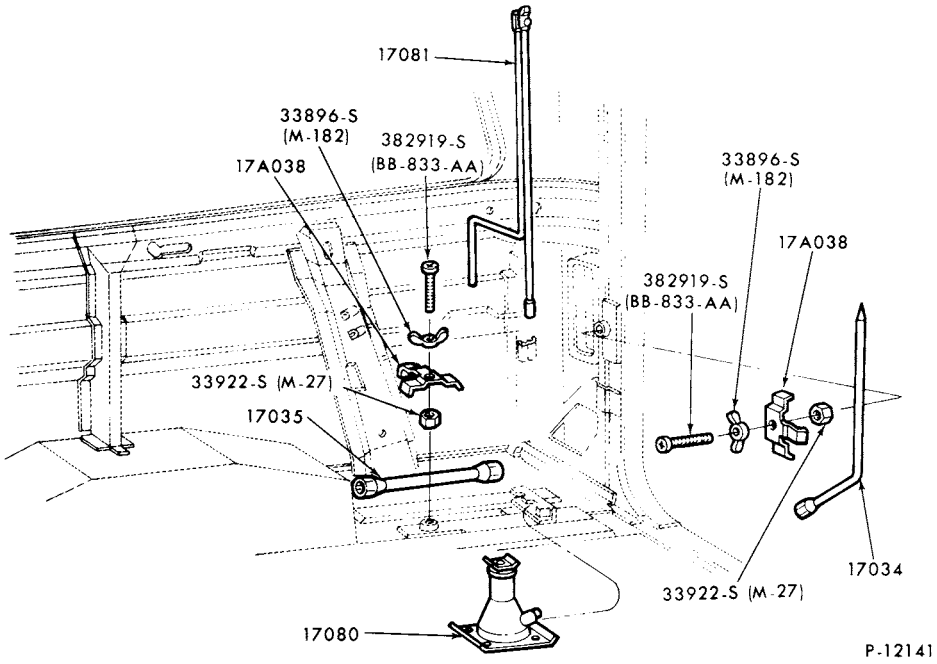

JACK STOWAGE
1975/ E100/350

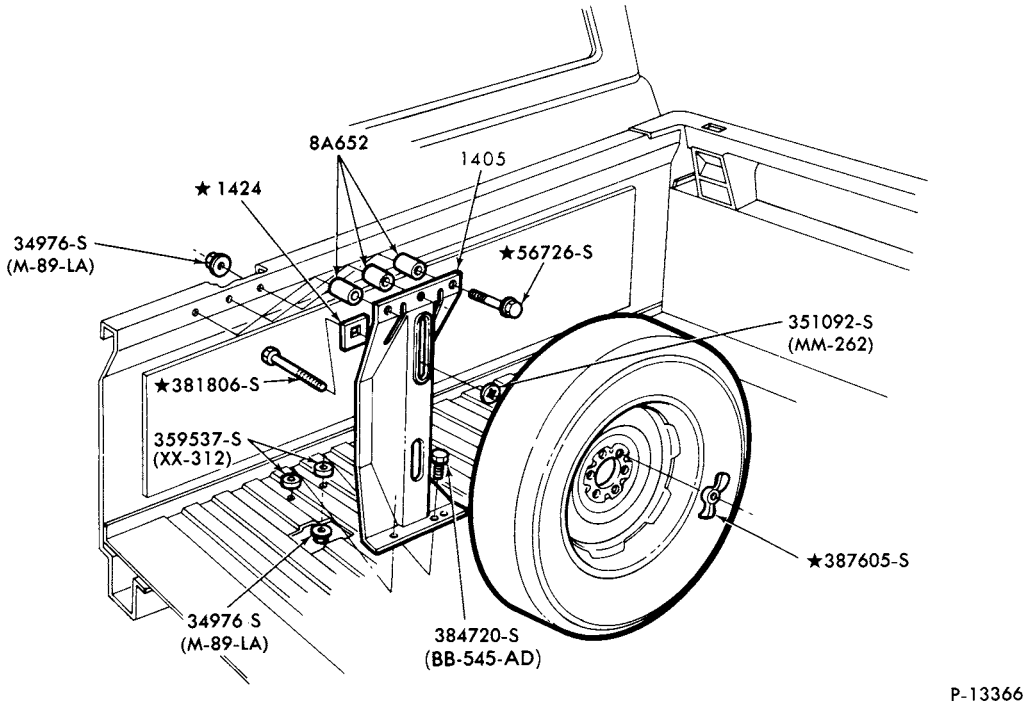

SPARE WHEEL CARRIER
1973/ F250 (CREW CAB)

COPYRIGHT © 1979 -FORD MOTOR-DEARBORN, MICHIGAN
COMPANY

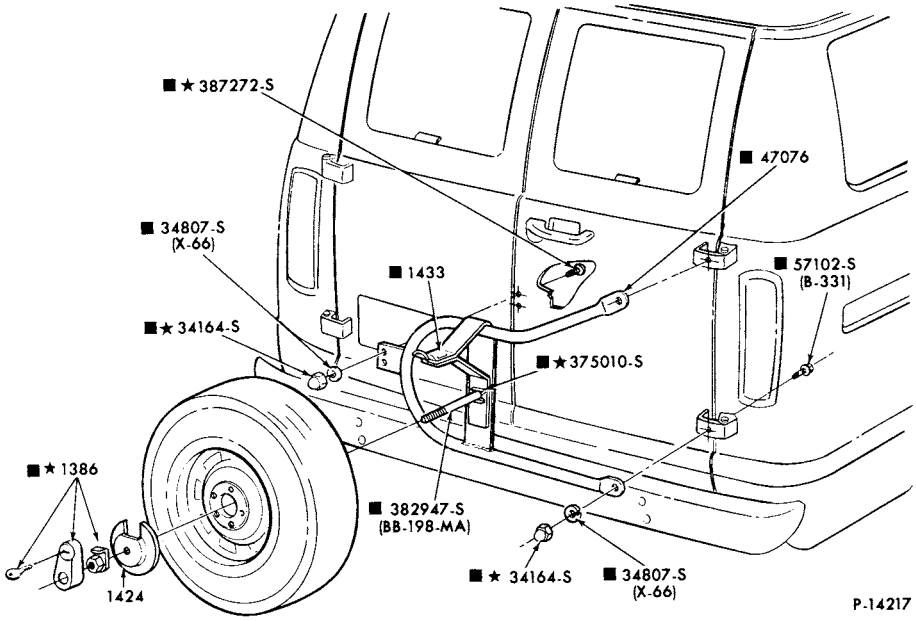

■ SERVICED IN 1440 KIT

SWING AWAY - SPARE WHEEL
1975/78 E100/350

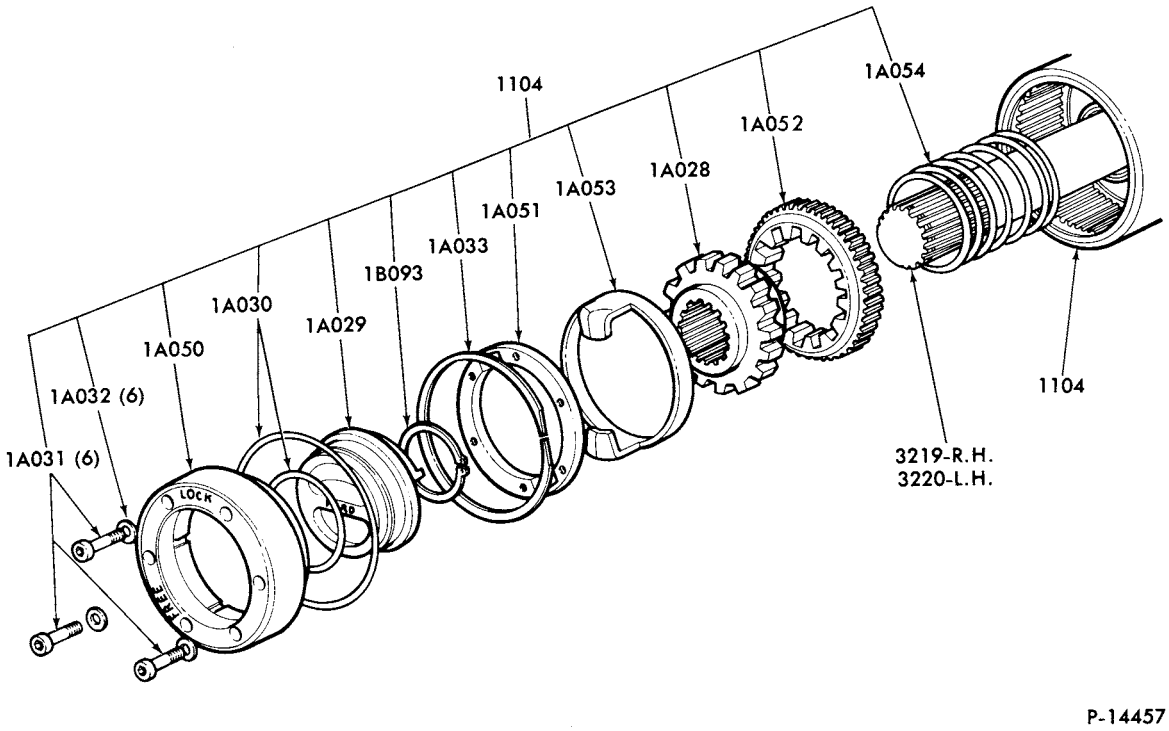

FRONT WHEEL DRIVE HUB LOCK (D8TZ-1104-E KIT) - DANA (SPICER)
1978/ F150/350--4/W/D

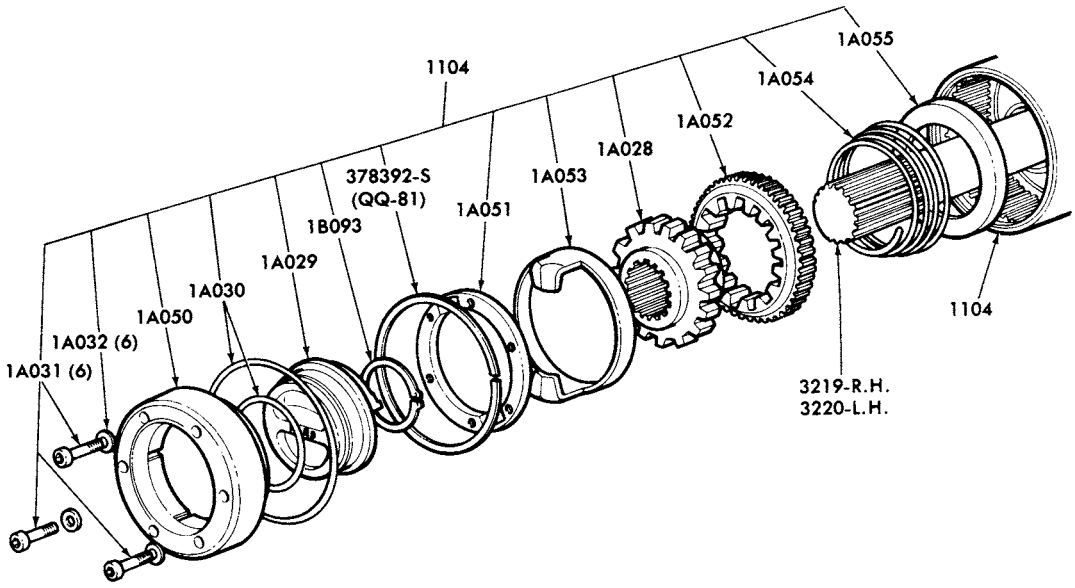

FRONT WHEEL DRIVE HUB LOCK (D8TZ-1104-F KIT) - DANA (SPICER)
1978/ F150/350--4/W/D

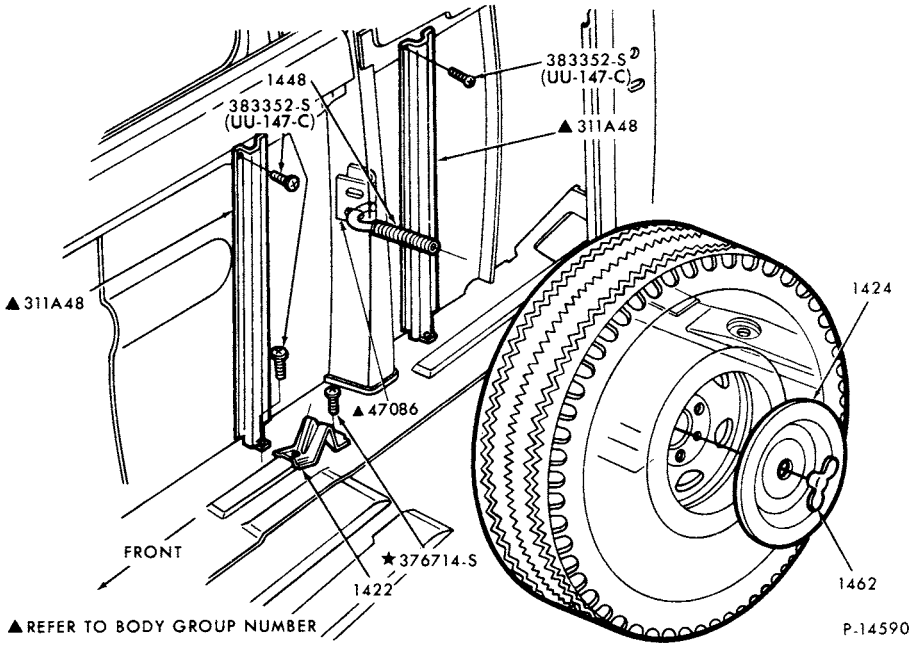

SPARE WHEEL STOWAGE
1978/ E150/350--SIDE MOUNT (SUPER VAN/WAGON)

COPYRIGHT © 1980— FORD MOTOR COMPANY —DEARBORN, MICHIGAN

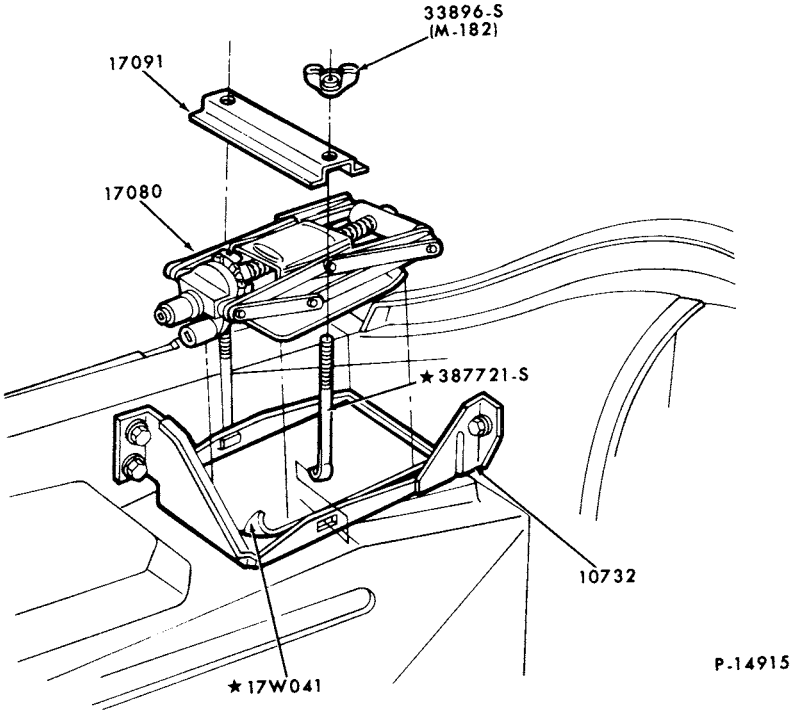

JACK STOWAGE and RELATED PARTS
1978/ F100/350

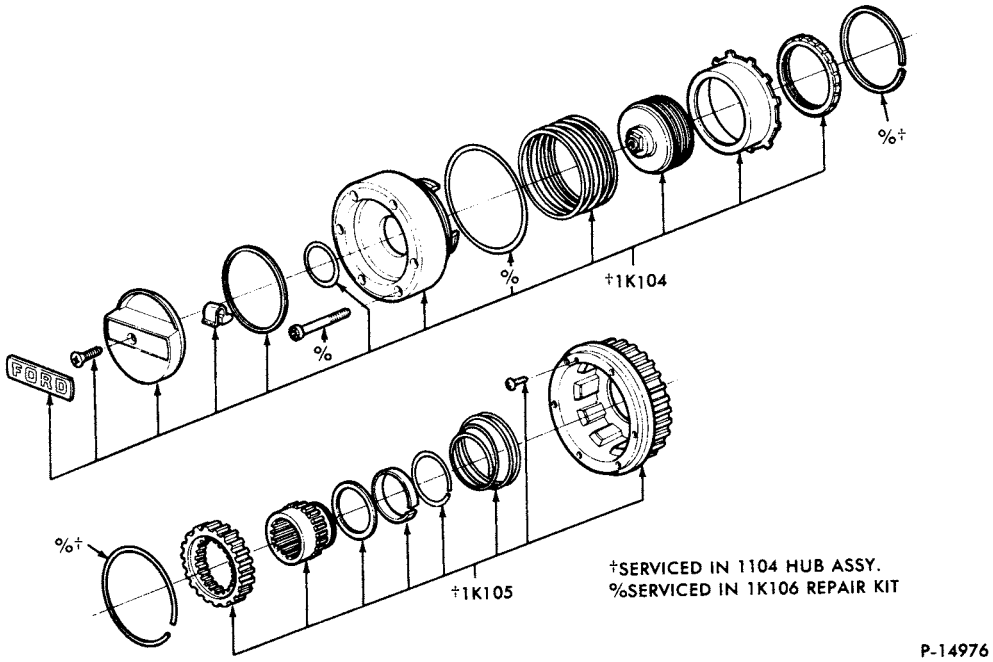

FRONT WHEEL DRIVE HUB LOCK (D9TZ 1104-A) - WARN
1979 F150/350

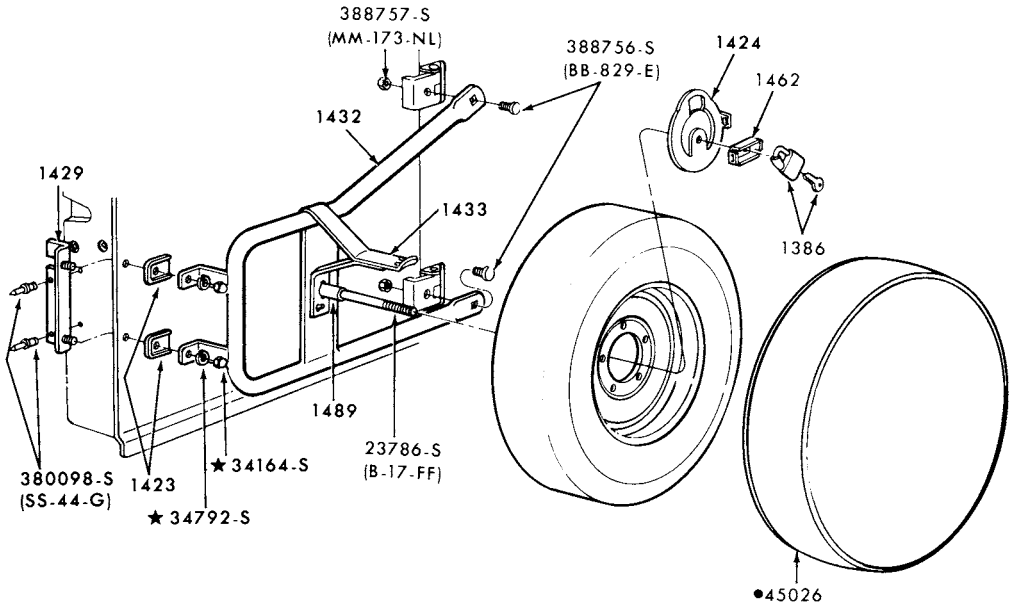

● REFER TO SOFT TRIM SECTION

P-15038

SWING AWAY - SPARE WHEEL
1979 E100/350

COPYRIGHT © 1979 FORD MOTOR COMPANY, DEARBORN, MICHIGAN

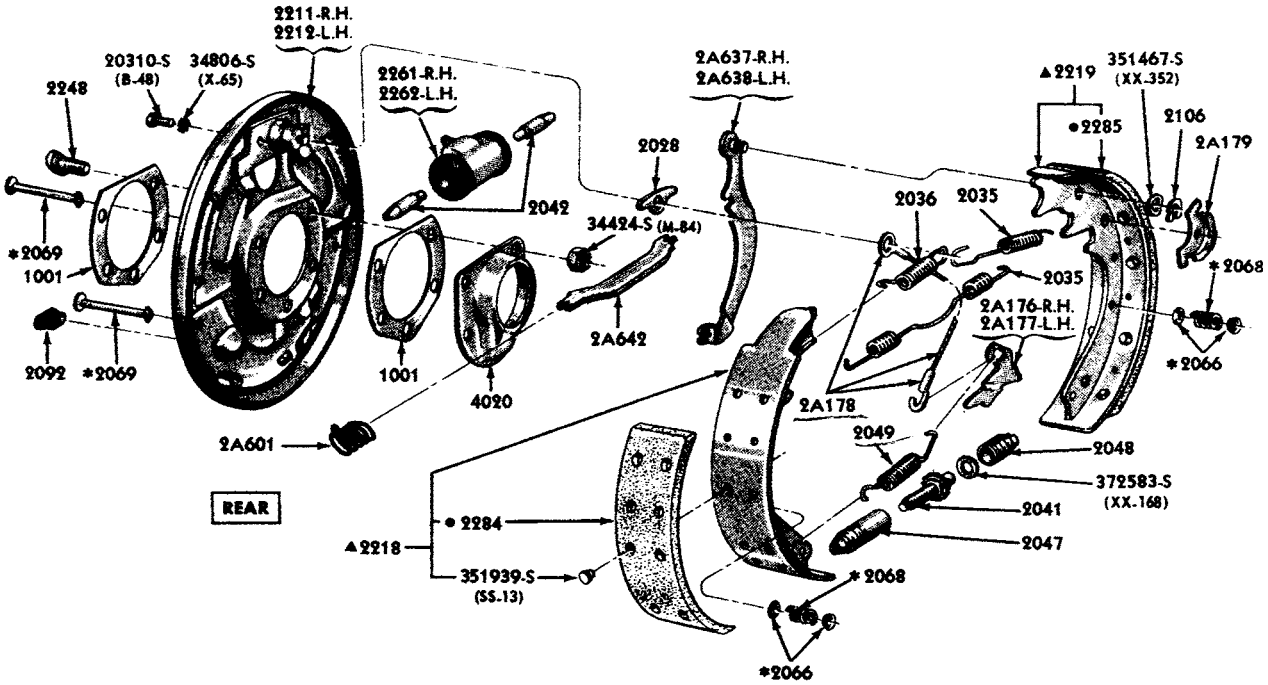

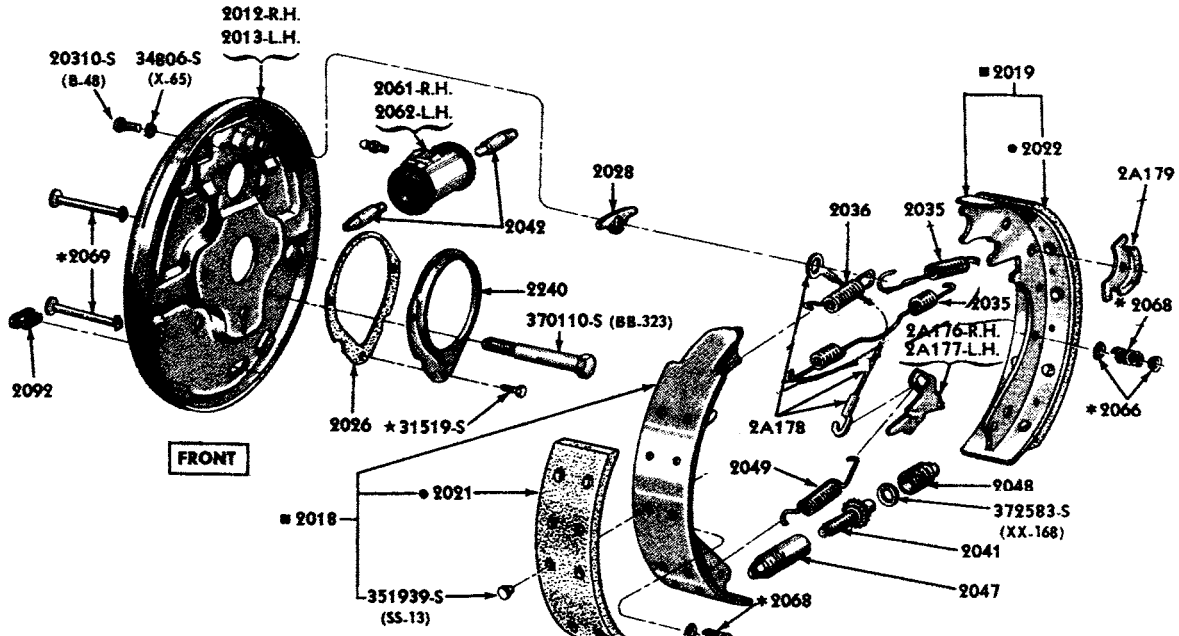

* ALSO SUPPLIED IN 2A094 BRAKE SHOE HOLD DOWN KIT
▲ SUPPLIED IN 2200 BRAKE SHOE AND LINING KIT
■ SUPPLIED IN 2001 BRAKE SHOE AND LINING KIT
• SUPPLIED IN 2007 LINING KIT

FRONT and REAR BRAKES (SELF ADJUSTING)-TYPICAL
1973/ F100/200 and F100--2/W/D

COPYRIGHT © 1979 FORD MOTOR COMPANY DEARBORN, MICHIGAN

1973/79 TRUCK SERIES 100/500

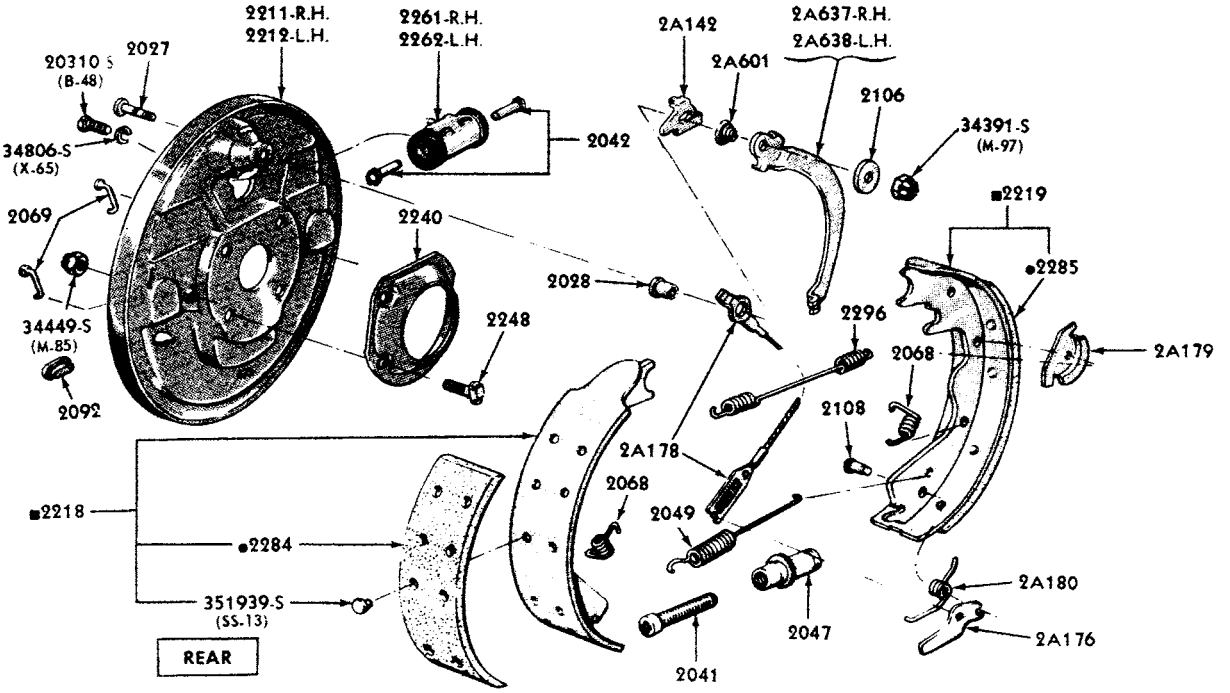

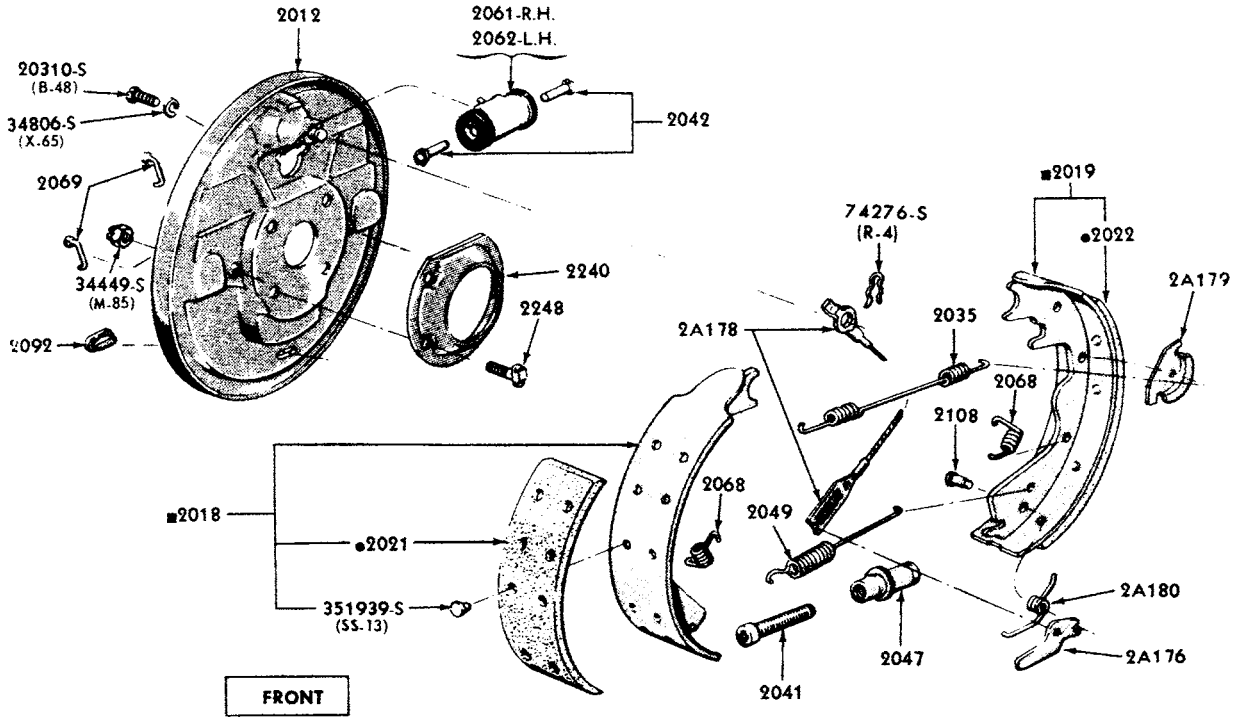

■ SUPPLIED IN 2001 BRAKE SHOE AND LINING KIT
• SUPPLIED IN 2007 LINING KIT

P-5346

FRONT and REAR BRAKES (12" x 2 1/2", 12 1/8" x 2" and 12" x 3"-BX)

1973/ E200, F250--2/W/D and F-P350/400

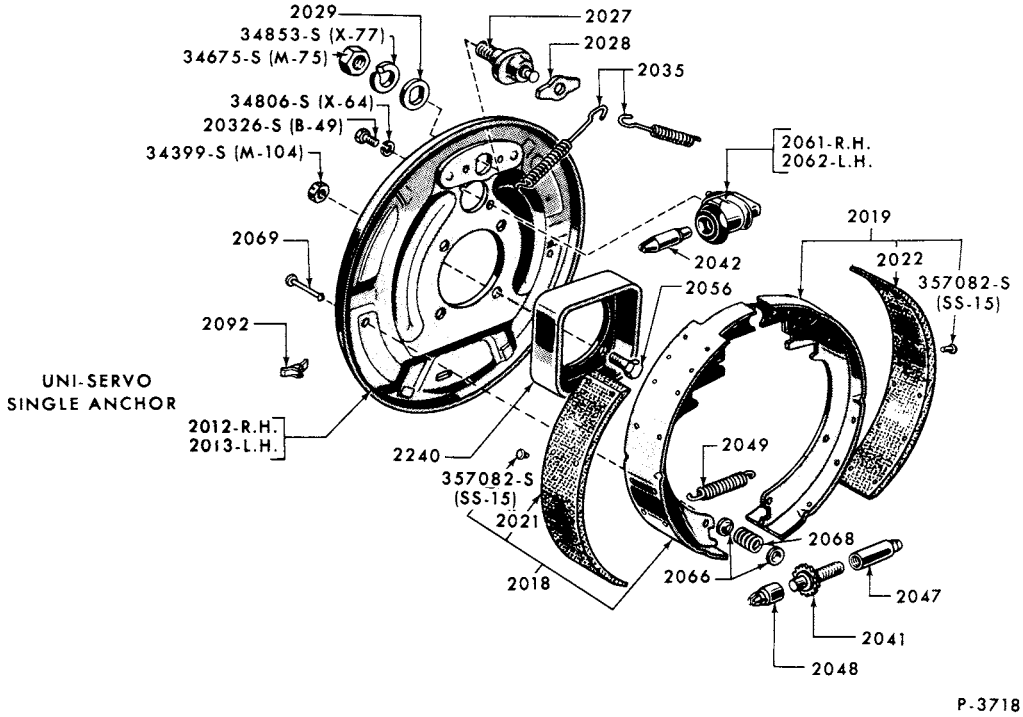

FRONT BRAKE-TYPICAL
1973/77 P500

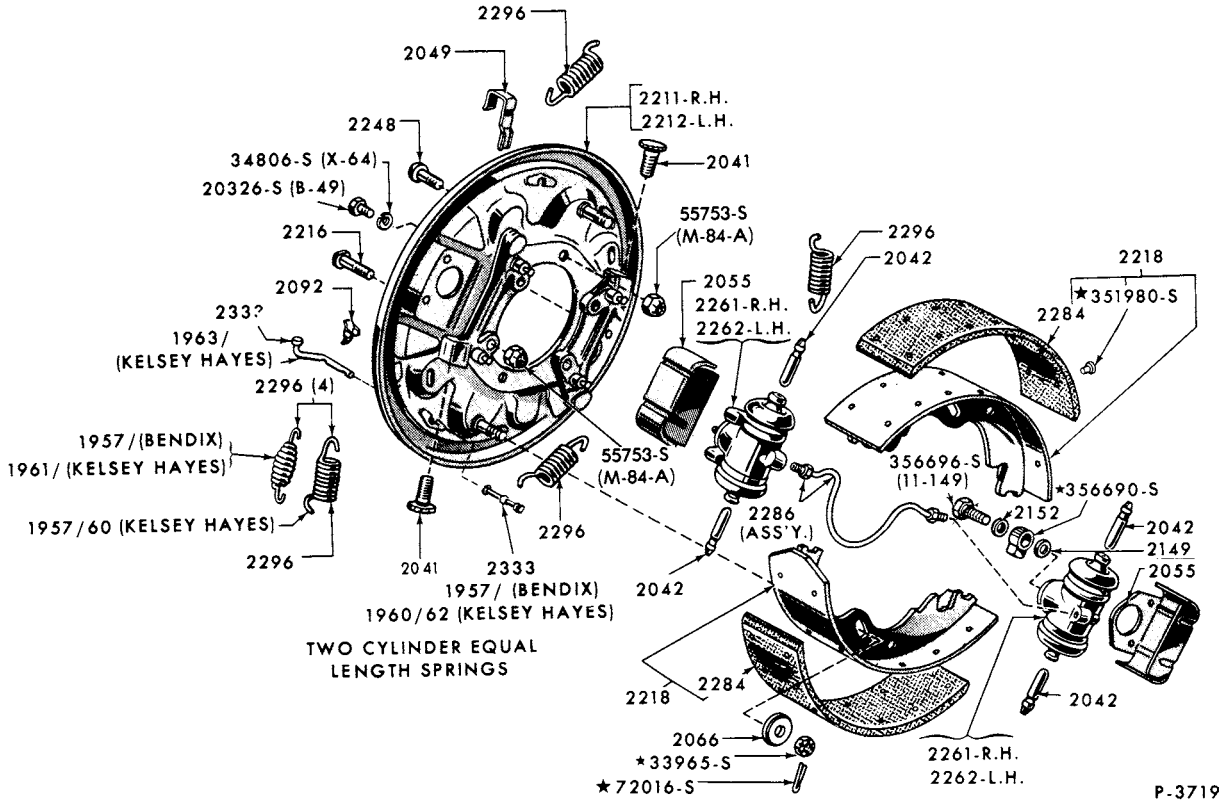

REAR BRAKE-TYPICAL
1973/77 P500

COPYRIGHT © 1979 — FORD MOTOR COMPANY — DEARBORN, MICHIGAN

1973/79 TRUCK SERIES 100/500

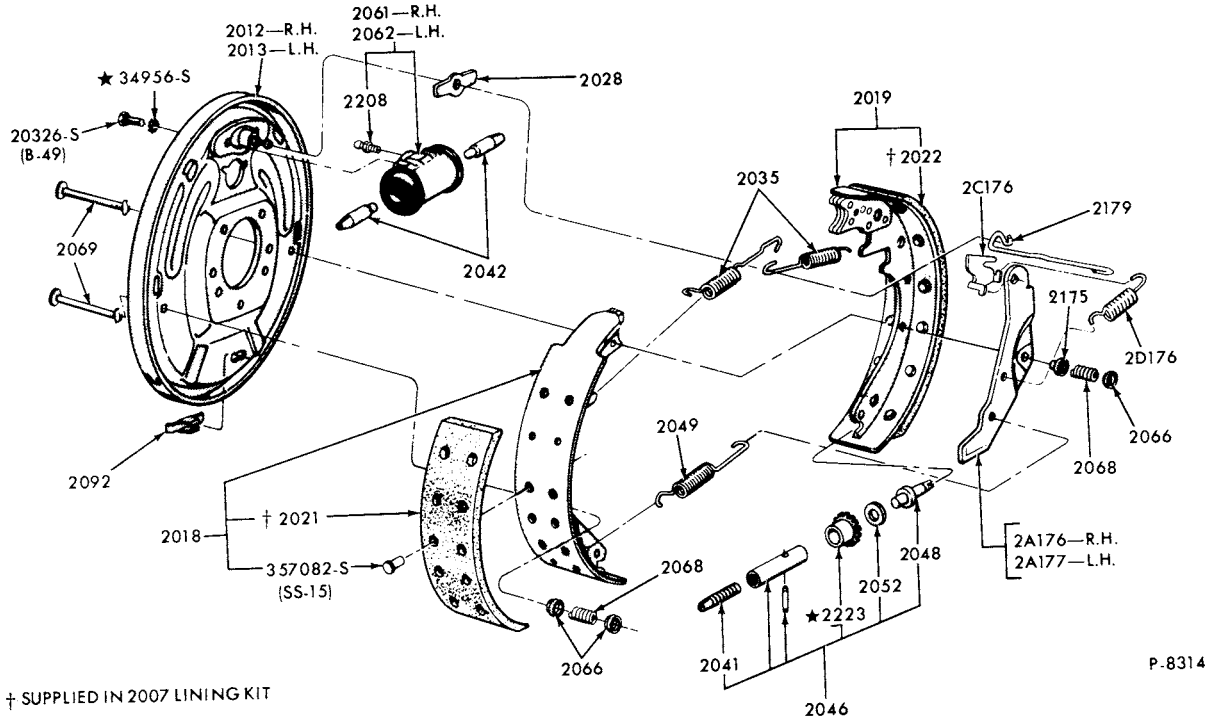

KELSEY HAYES FRONT BRAKES (14" x 2 1/2"-SINGLE ANCHOR SELF ADJUSTING-HYDRAULIC)
1973/77 B-F500 and 1973/76 M450/500

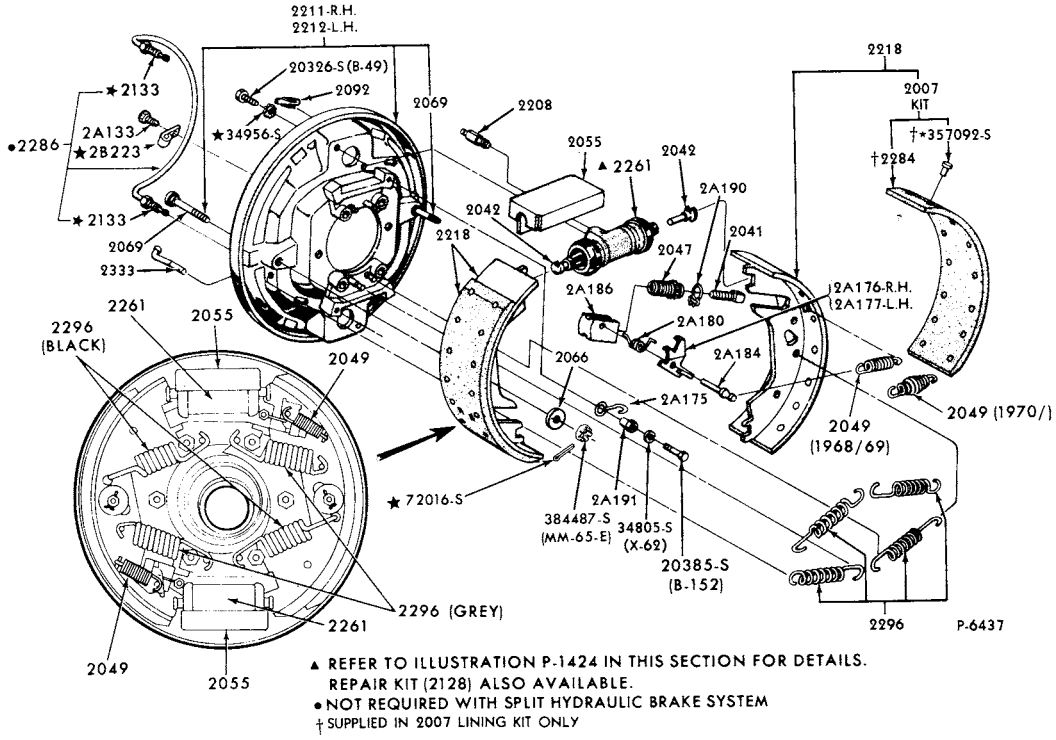

KELSEY HAYES REAR BRAKE (15" x 4" and 15" x 15" x 5"-SELF ADJUSTING-HYDRAULIC)
1973/77 B-F500 and 1973/76 M450/500

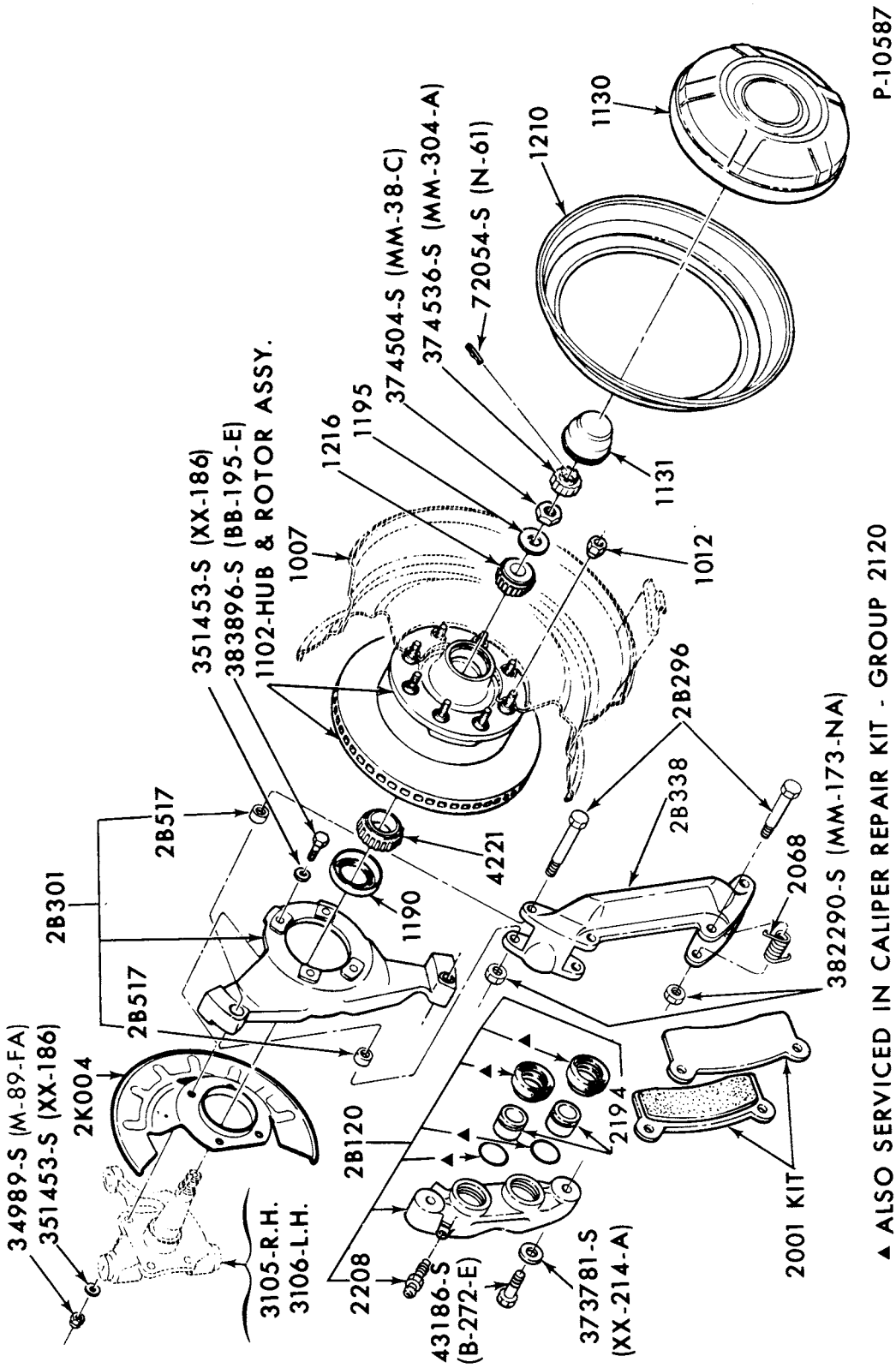

FRONT DISC BRAKE and RELATED PARTS
1973/75 F250/350--DUAL PISTON

COPYRIGHT © 1979 FORD MOTOR COMPANY, DEARBORN, MICHIGAN

1973/79 TRUCK SERIES 100/500

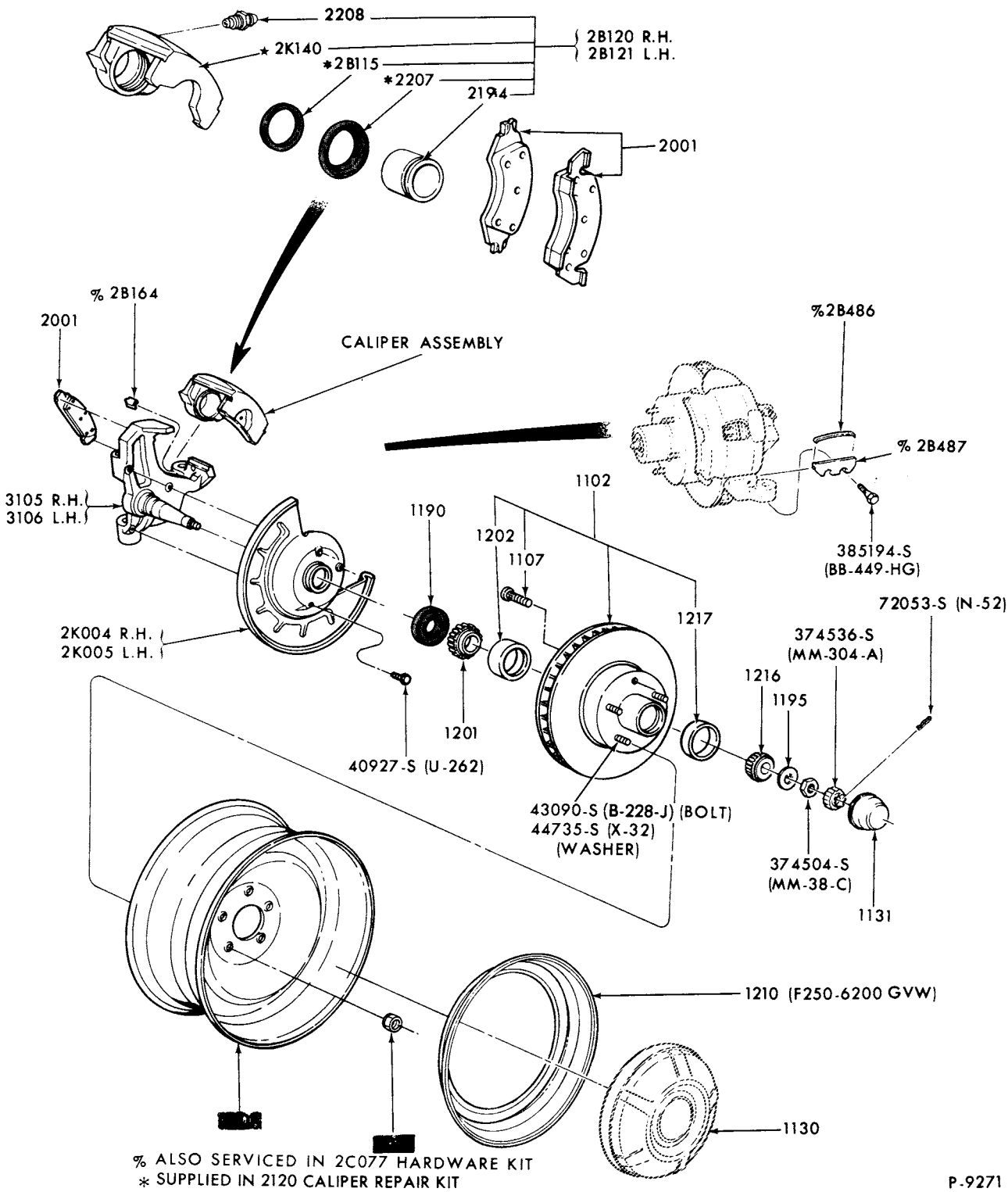

FRONT DISC BRAKE and RELATED PARTS
1973/ F100/250--SINGLE PISTON

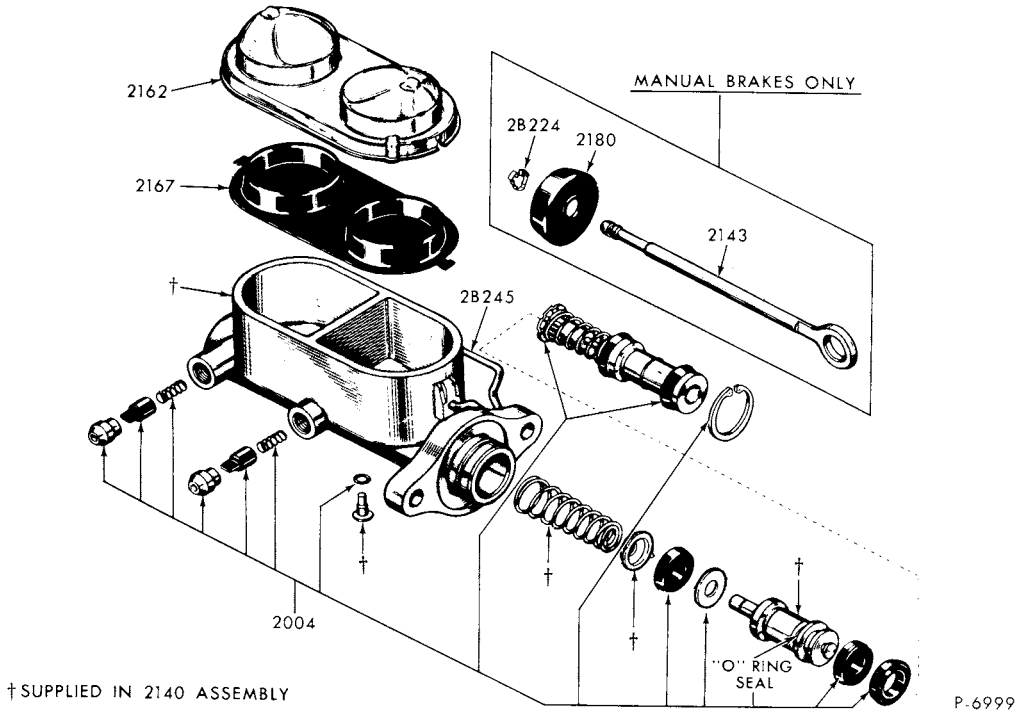

BENDIX BRAKE MASTER CYLINDER
1973/ E100/300, F100/350 and 1973/76 P350/400

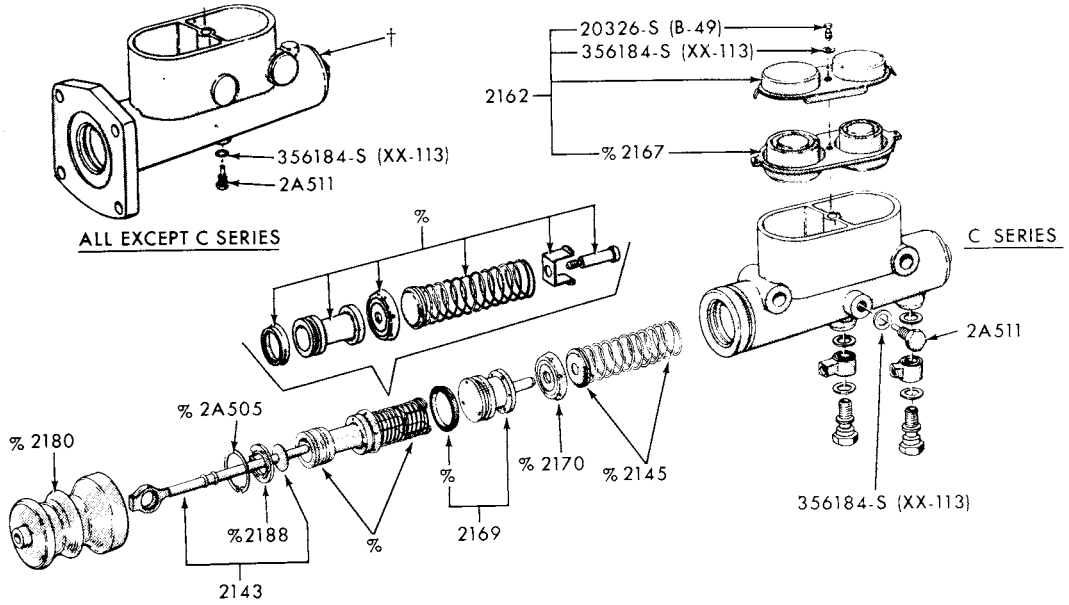

WAGNER BRAKE MASTER CYLINDER-TYPICAL
1973/77 B-F500 and 1973/76 M450/500

COPYRIGHT © 1979 FORD MOTOR COMPANY, DEARBORN, MICHIGAN

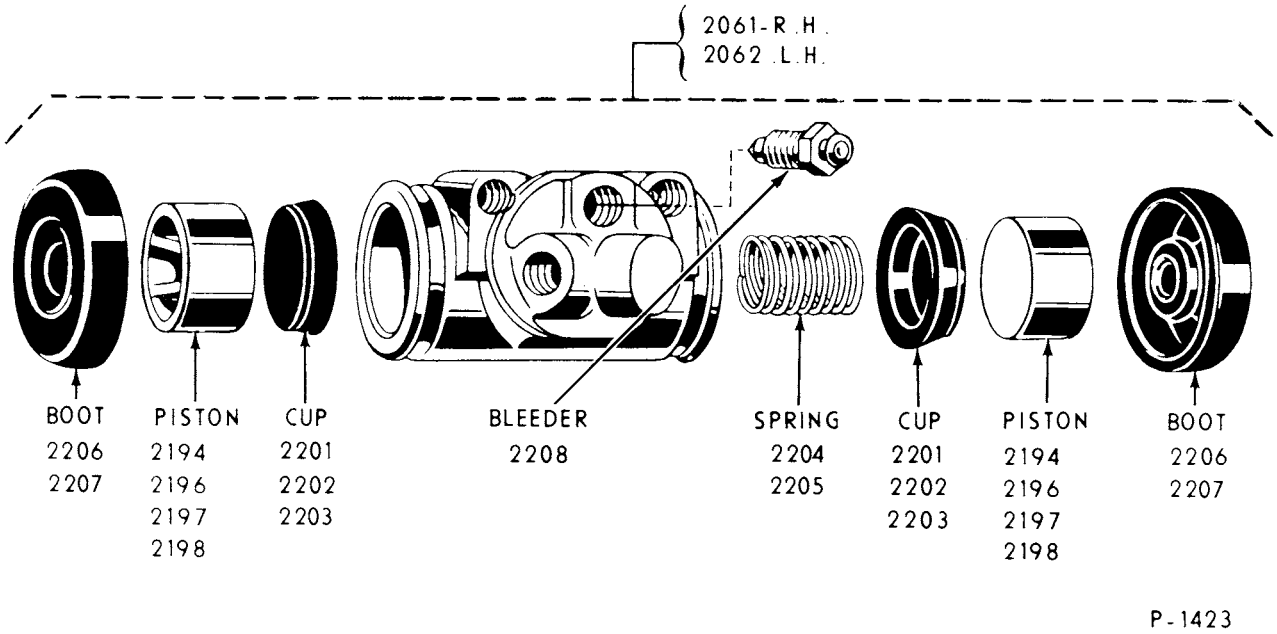

FRONT BRAKE CYLINDER (DUAL PISTON)-TYPICAL
1973/ F100/350 and B-F-P350/500
1973/74 E100/300

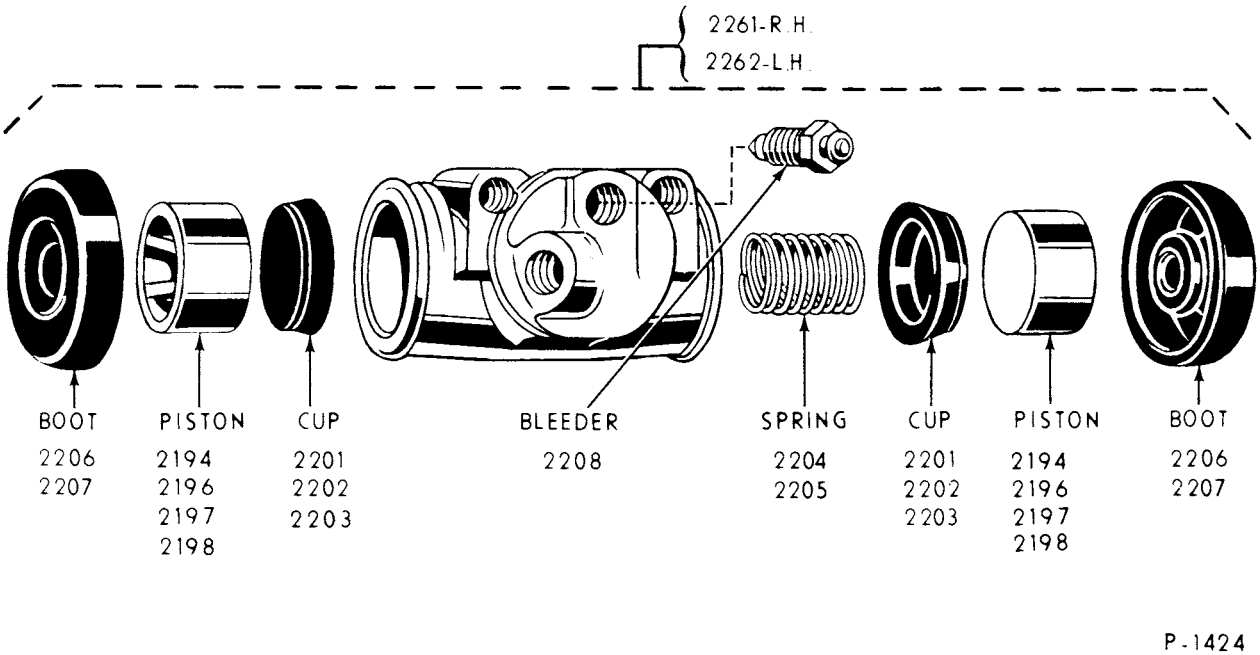

REAR BRAKE CYLINDER (DUAL PISTON)-TYPICAL
1973/ E-F100/350 and B-F-P350/500

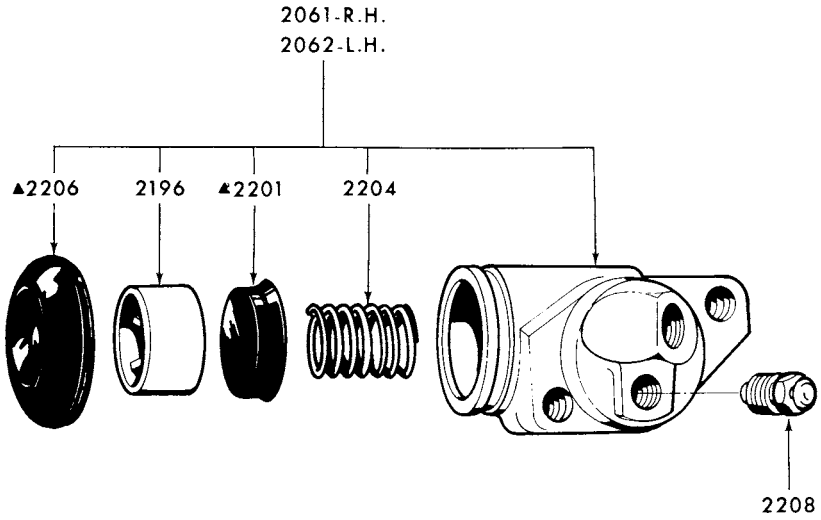

▲ ALSO SERVICED IN WHEEL CYLINDER REPAIR KIT-2221

P-11586

FRONT BRAKE CYLINDER (SINGLE PISTON)-TYPICAL
1973/77 P500

COPYRIGHT © 1979 FORD MOTOR COMPANY - DEARBORN, MICHIGAN

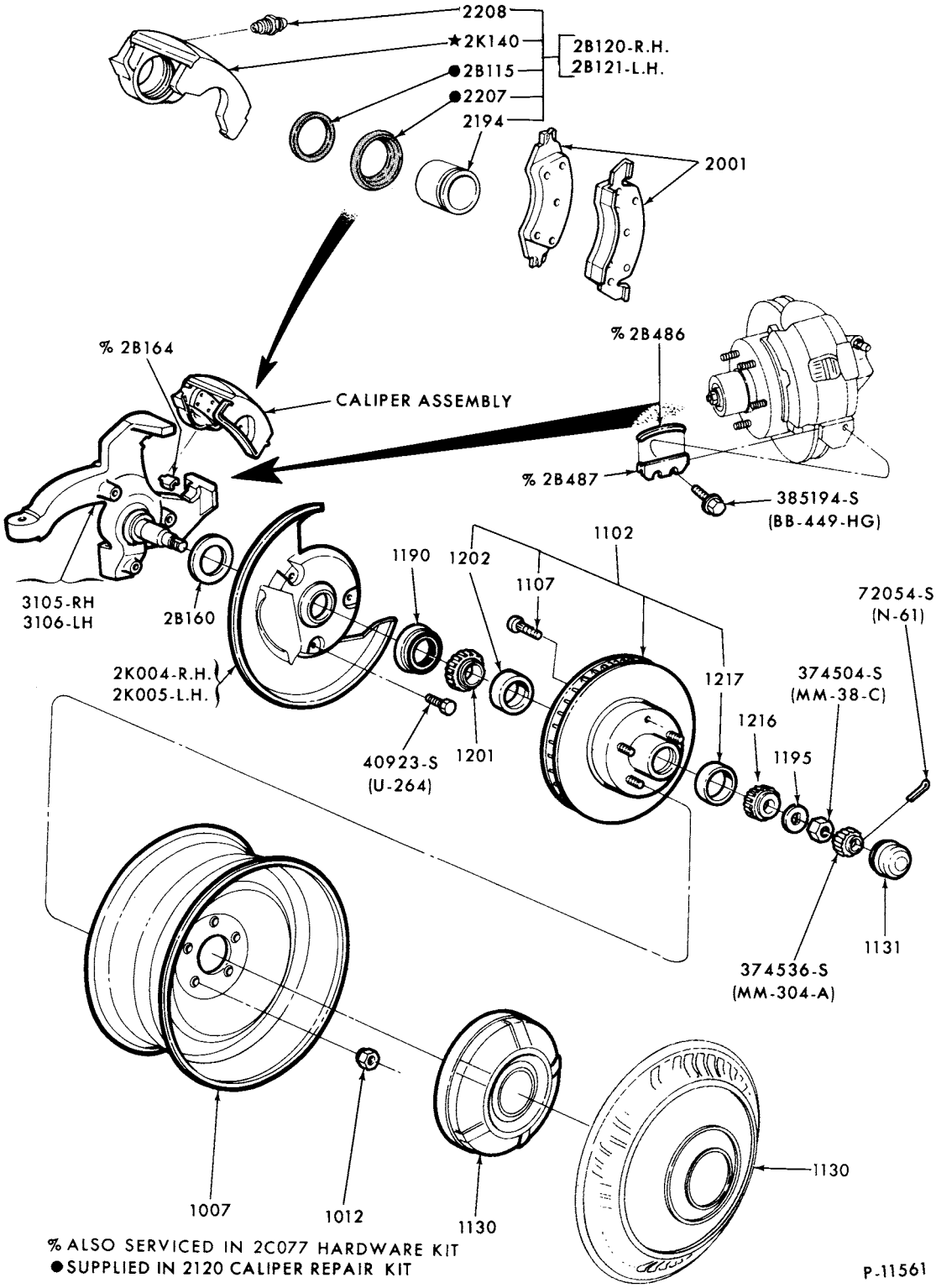

FRONT DISC BRAKE and RELATED PARTS
1975/ E100/150--SINGLE PISTON

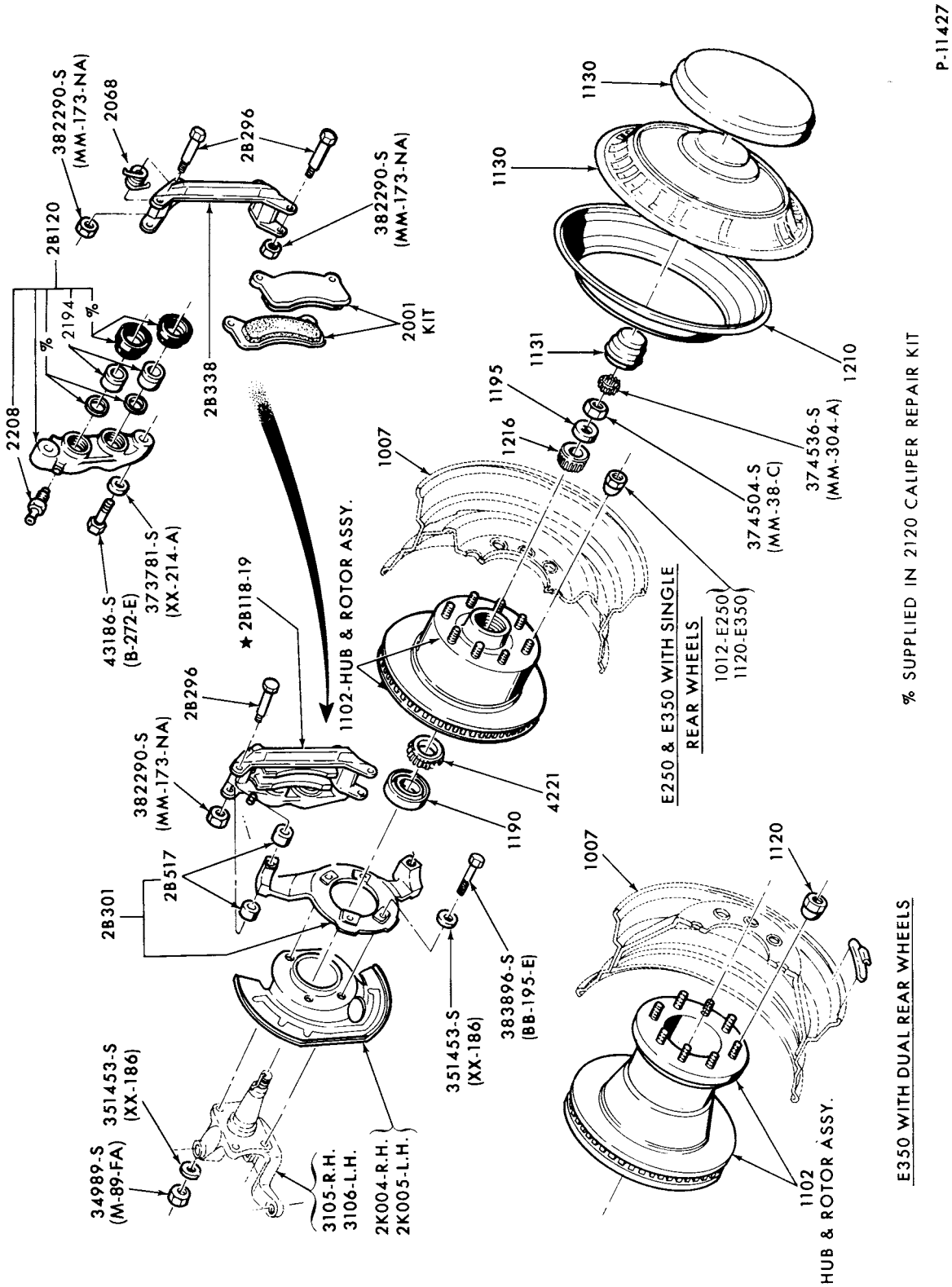

FRONT DISC BRAKE and RELATED PARTS
1975 E250/350--DUAL PISTON

COPYRIGHT © 1979 FORD MOTOR COMPANY DEARBORN, MICHIGAN

1973/79 TRUCK SERIES 100/500

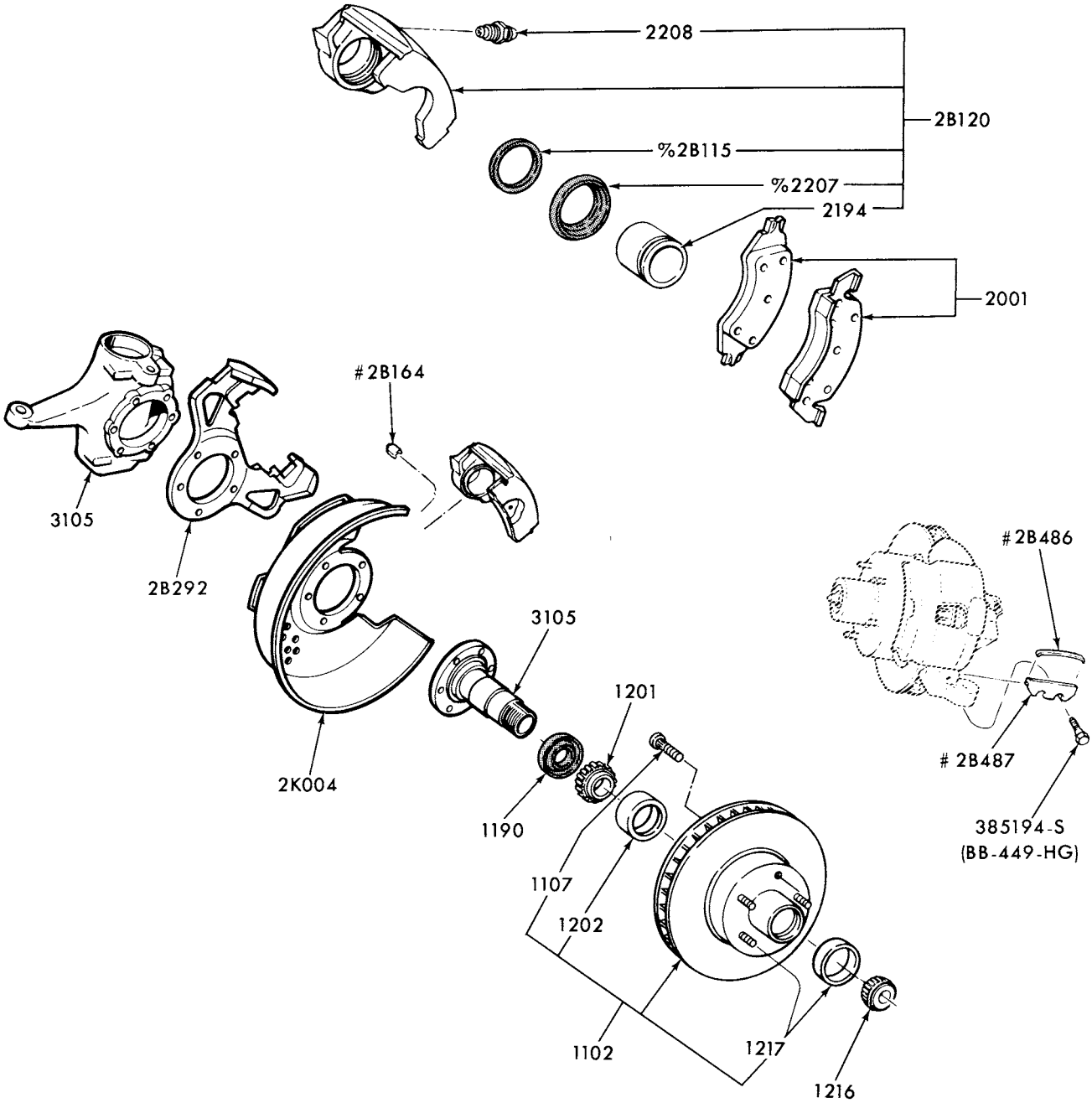

#ALSO SERVICED IN 2C077 HARDWARE KIT
% SUPPLIED IN 2120 CALIPER REPAIR KIT

P-12887

FRONT DISC BRAKE and RELATED PARTS
1976/ F100/150--4/W/D-SINGLE PISTON

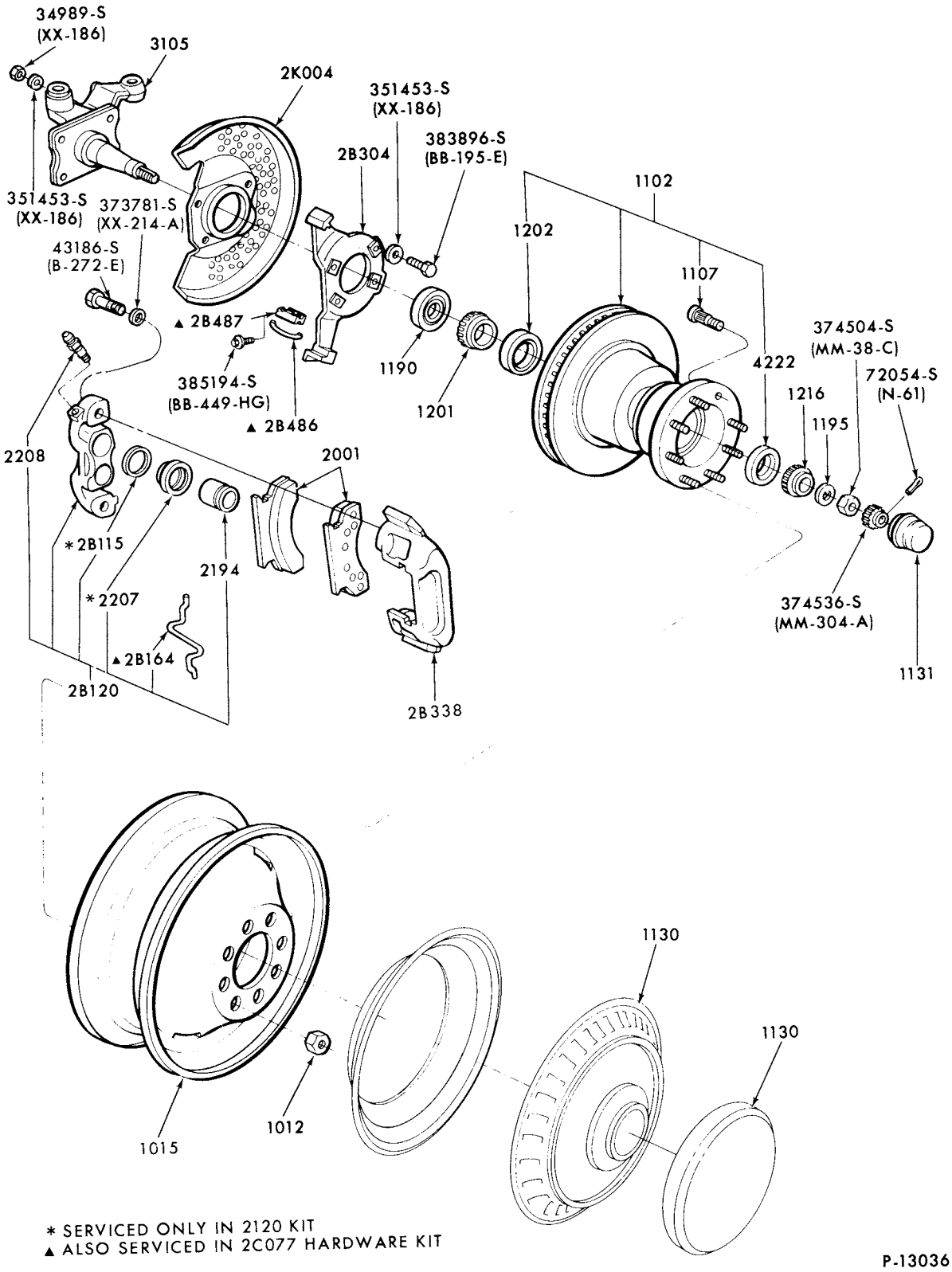

FRONT DISC BRAKE and RELATED PARTS
1976/ E-F250/350--2/W/D-DUAL PISTON

COPYRIGHT © 1979 FORD MOTOR COMPANY-DEARBORN, MICHIGAN

1973/79 TRUCK SERIES 100/500

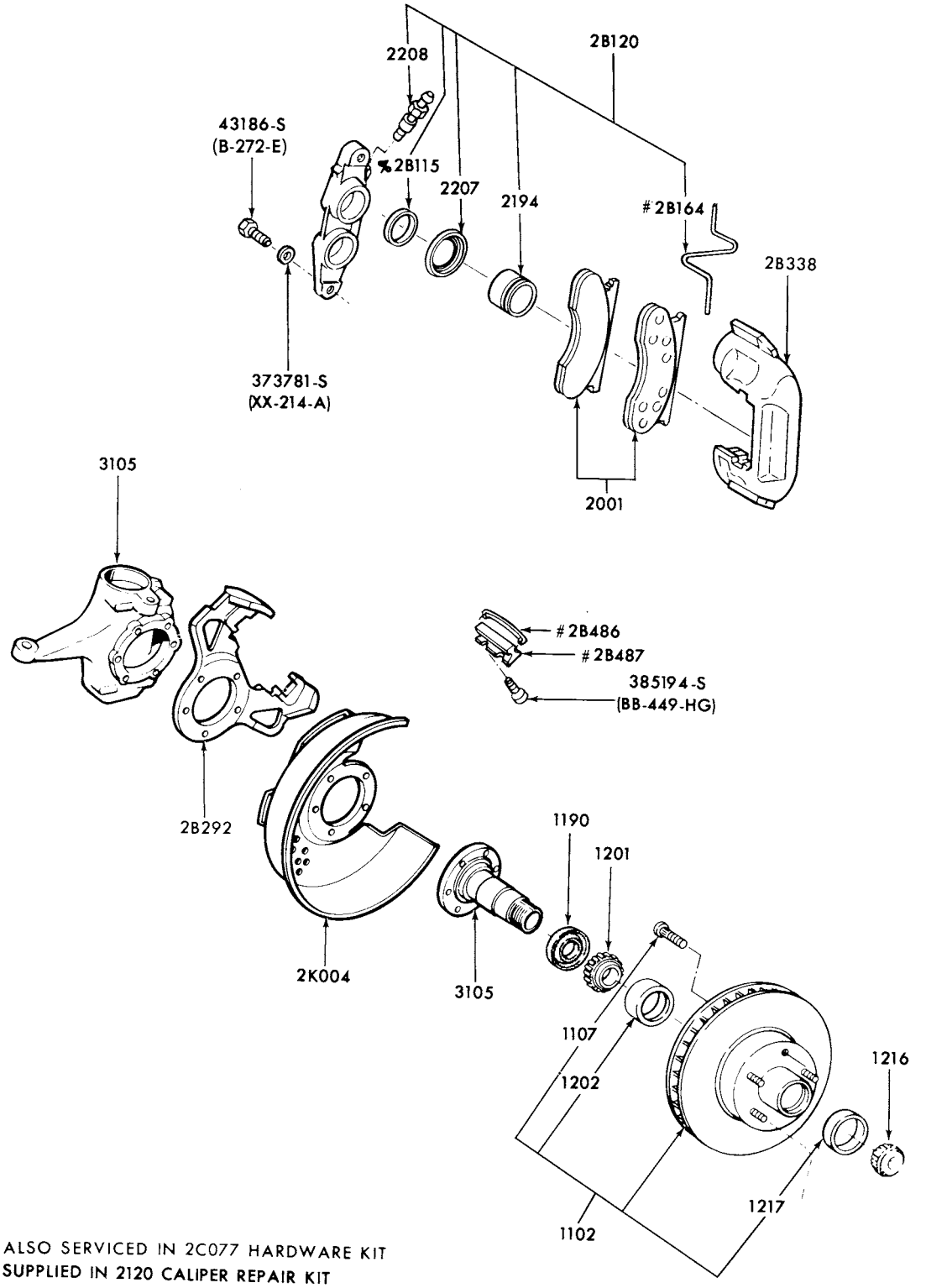

ALSO SERVICED IN 2C077 HARDWARE KIT
% SUPPLIED IN 2120 CALIPER REPAIR KIT

FRONT DISC BRAKE and RELATED PARTS
1976/ F250/350--4/W/D-DUAL PISTON

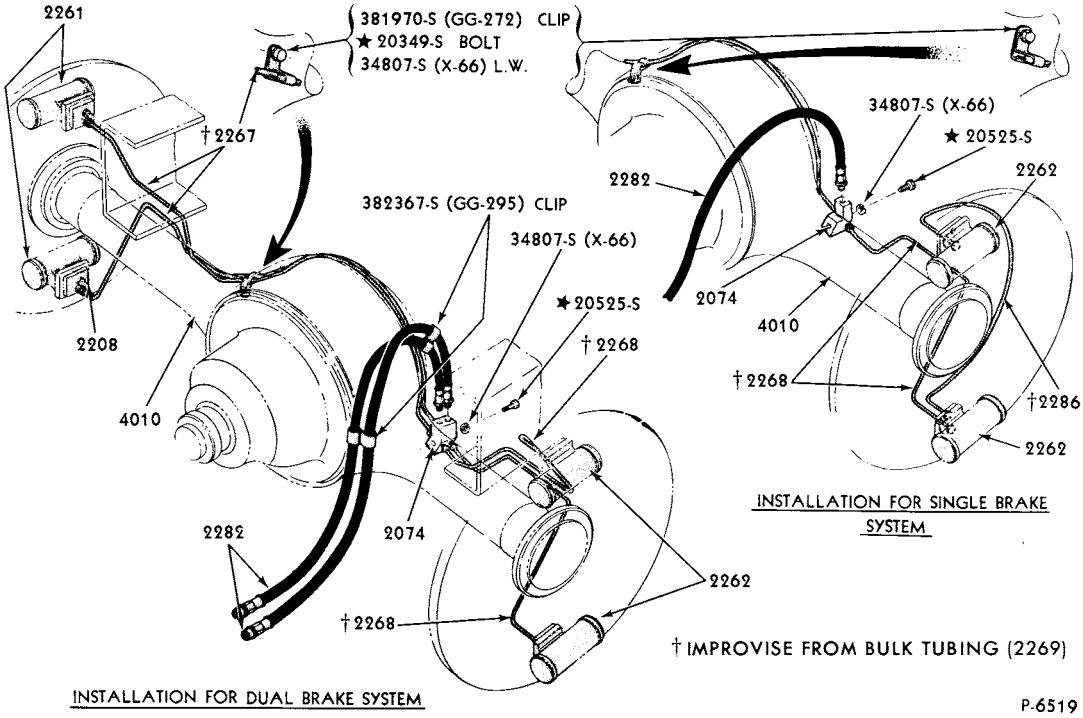

HYDRAULIC BRAKE SYSTEM-REAR
1973/77 B-F500

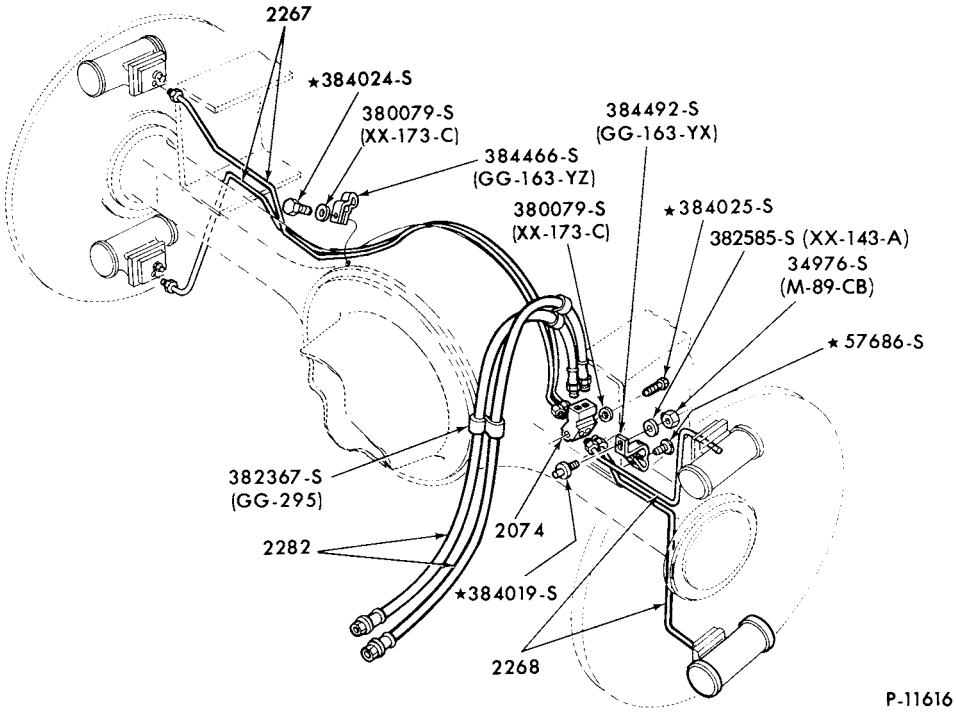

HYDRAULIC BRAKE SYSTEM-REAR AXLE
(FOR RELATED FRAME TUBING INSTALLATIONS, REFER TO PAGES 12 and 13)
1973/76 M450/500

COPYRIGHT © 1979 FORD MOTOR COMPANY - DEARBORN, MICHIGAN

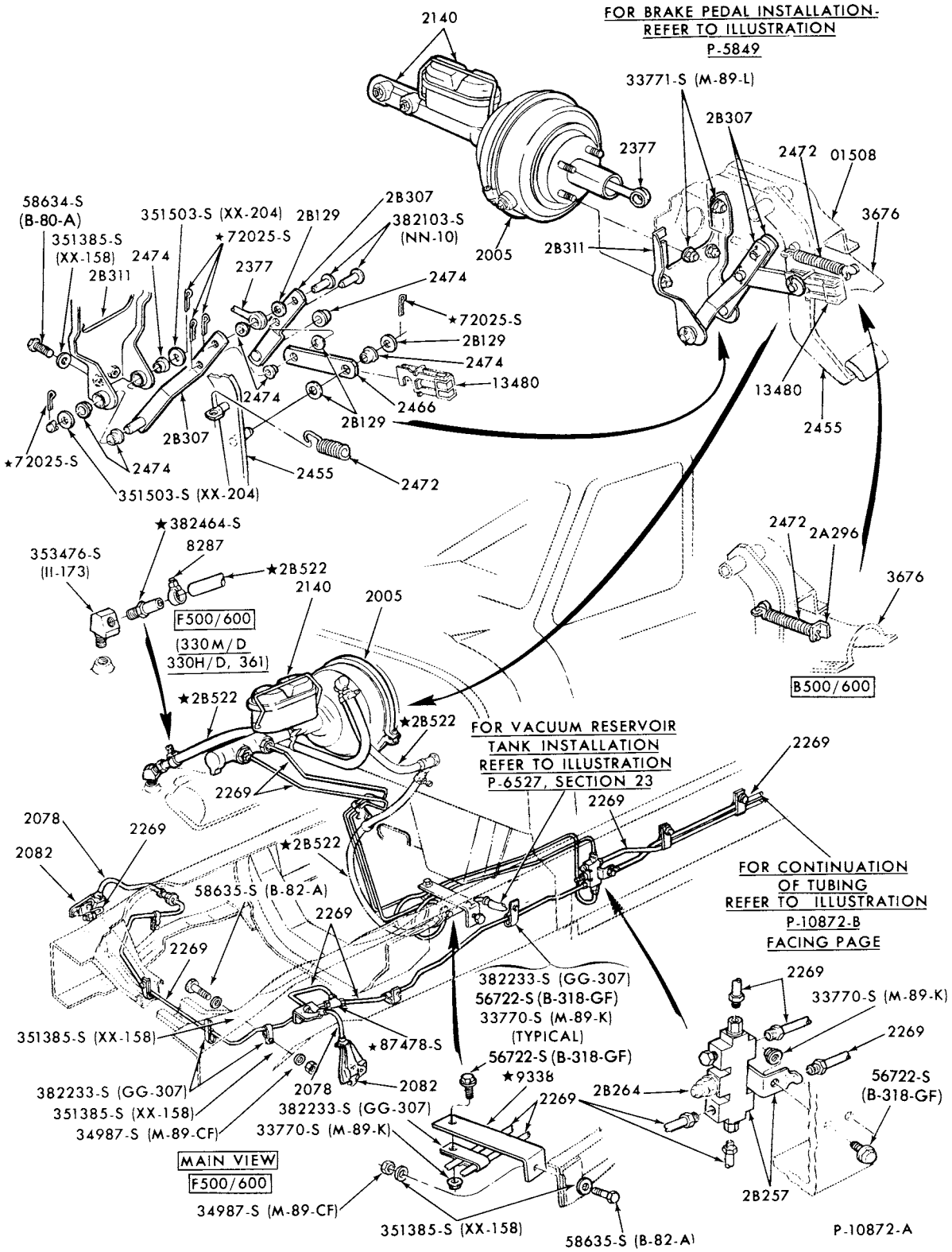

DUAL HYDRAULIC VACUUM BRAKE SYSTEM
(FOR REAR AXLE TUBING INSTALLATION, REFER TO PAGE 1;
FOR BOOSTER RESERVOIR TANKS, REFER TO SECTION 23 PAGE 2 and 14)
1973/77 B-F500--w/DASH MOUNTED BOOSTER

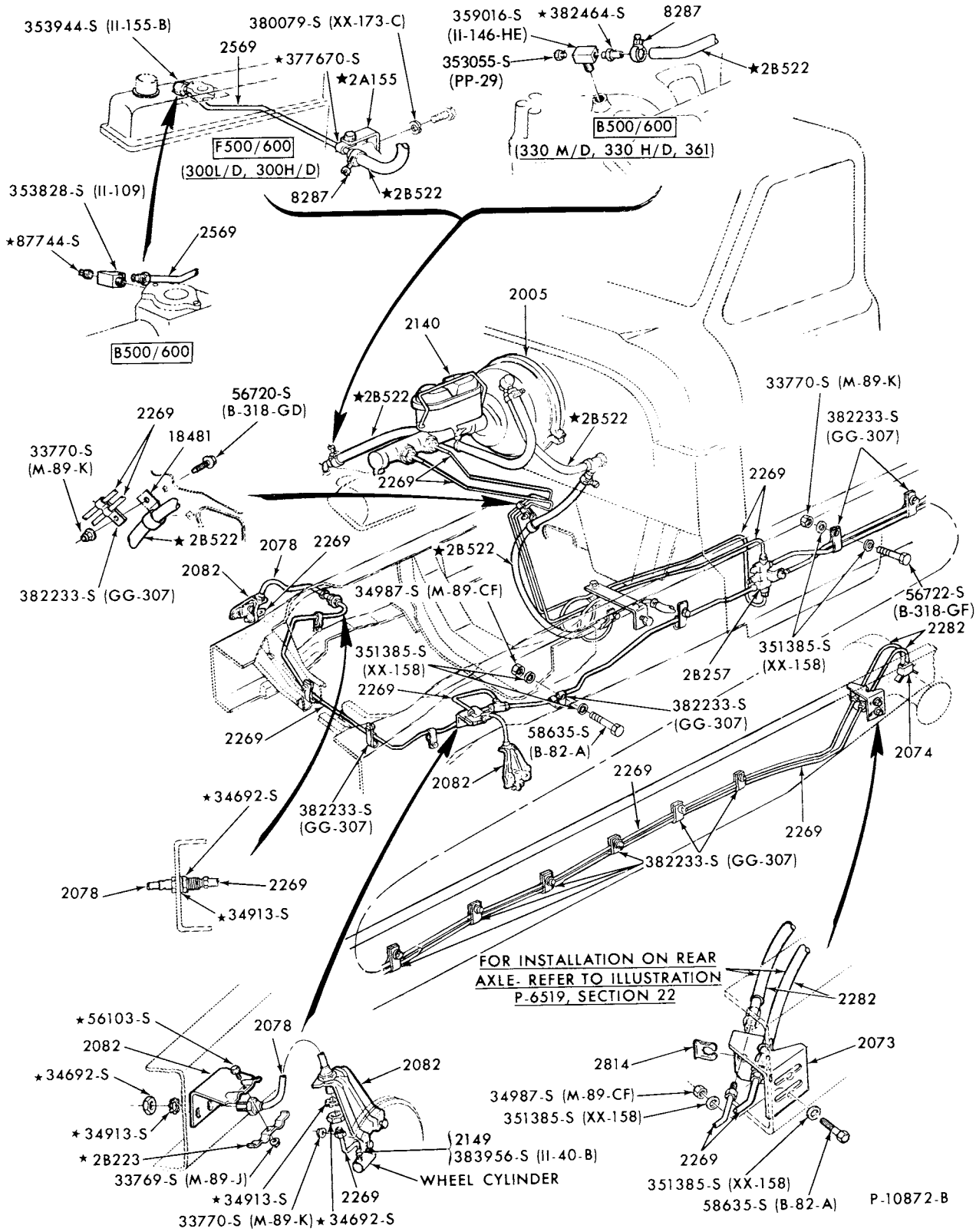

DUAL HYDRAULIC VACUUM BRAKE SYSTEM
(FOR REAR AXLE TUBING INSTALLATION, REFER TO PAGE 1
FOR BOOSTER RESERVOIR TANKS, REFER TO SECTION 23 PAGE 2 and 14)
1973/77 B-F500--w/DASH MOUNTED BOOSTER

COPYRIGHT © 1979 FORD MOTOR COMPANY DEARBORN, MICHIGAN

1973/79 TRUCK SERIES 100/500

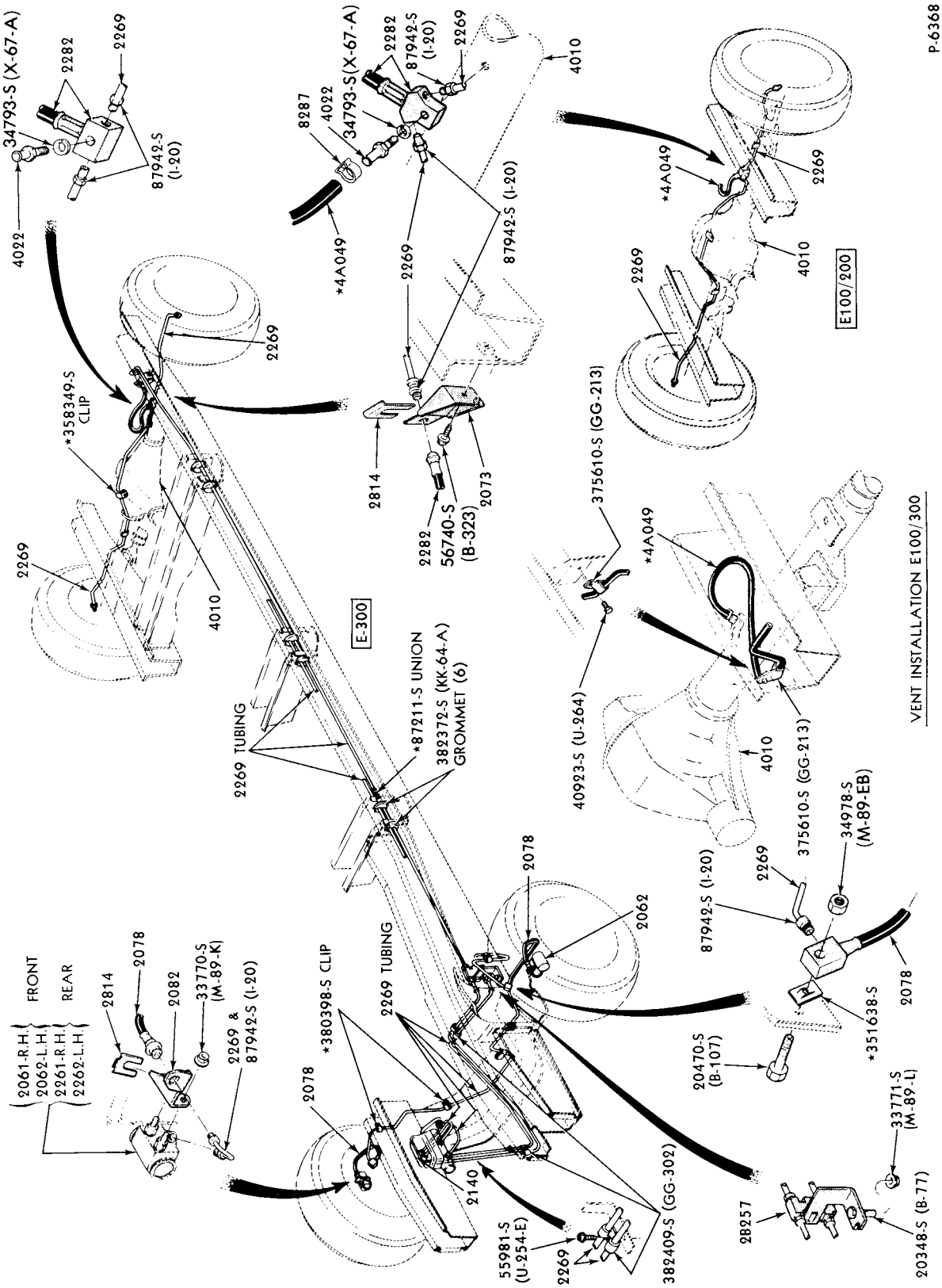

HYDRAULIC BRAKE SYSTEM
1973/74 E100/300

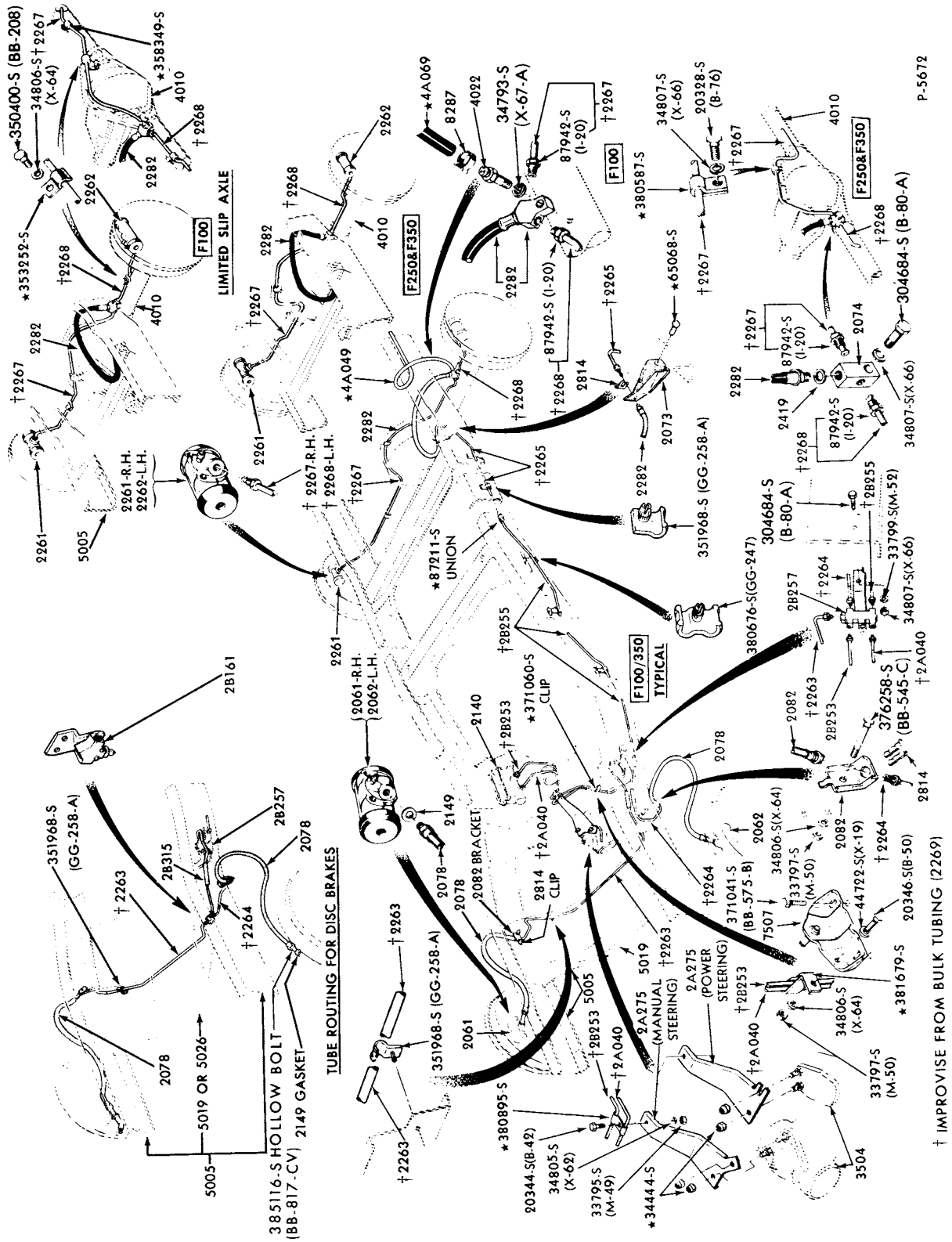

HYDRAULIC BRAKE SYSTEM
1973 F250/350--2/W/D and ABOVE 6200 GVW

COPYRIGHT © 1979 - FORD MOTOR COMPANY, DEARBORN, MICHIGAN

1973/79 TRUCK SERIES 100/500

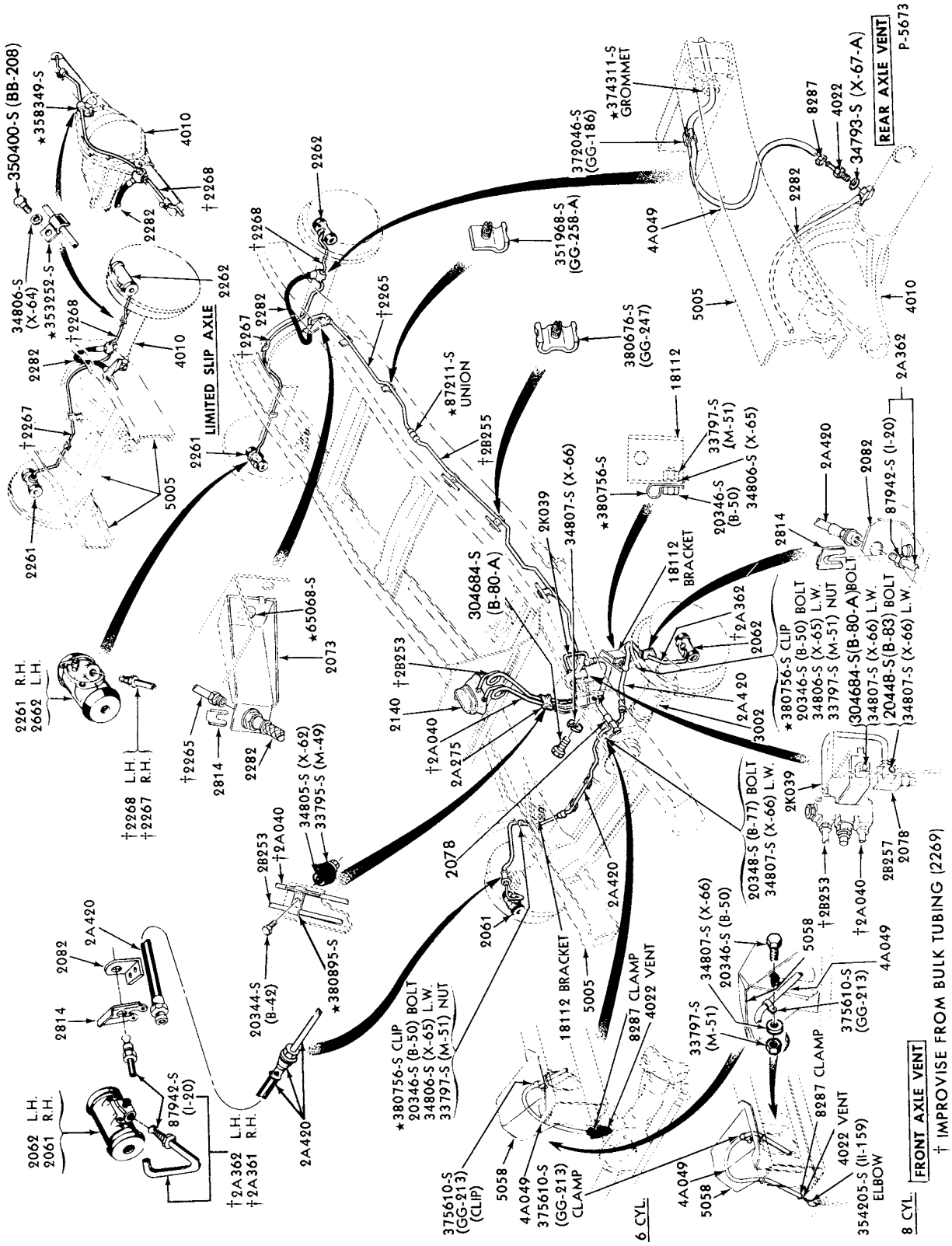

HYDRAULIC BRAKE SYSTEM
1973/75 F100--4/W/D

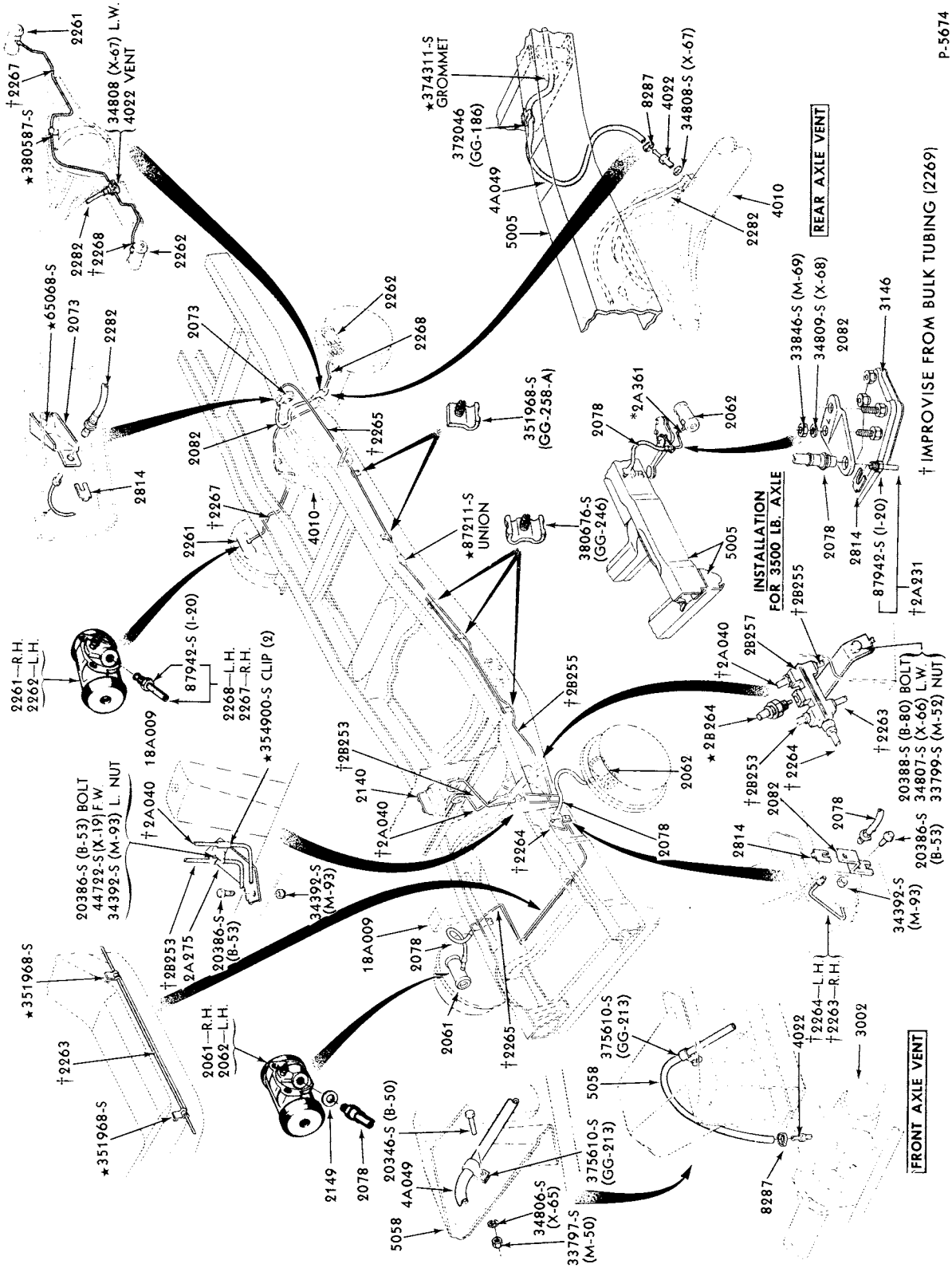

HYDRAULIC BRAKE SYSTEM
1973/75 F250--4/W/D

COPYRIGHT © 1979 FORD MOTOR COMPANY DEARBORN, MICHIGAN

1973/79 TRUCK SERIES 100/500

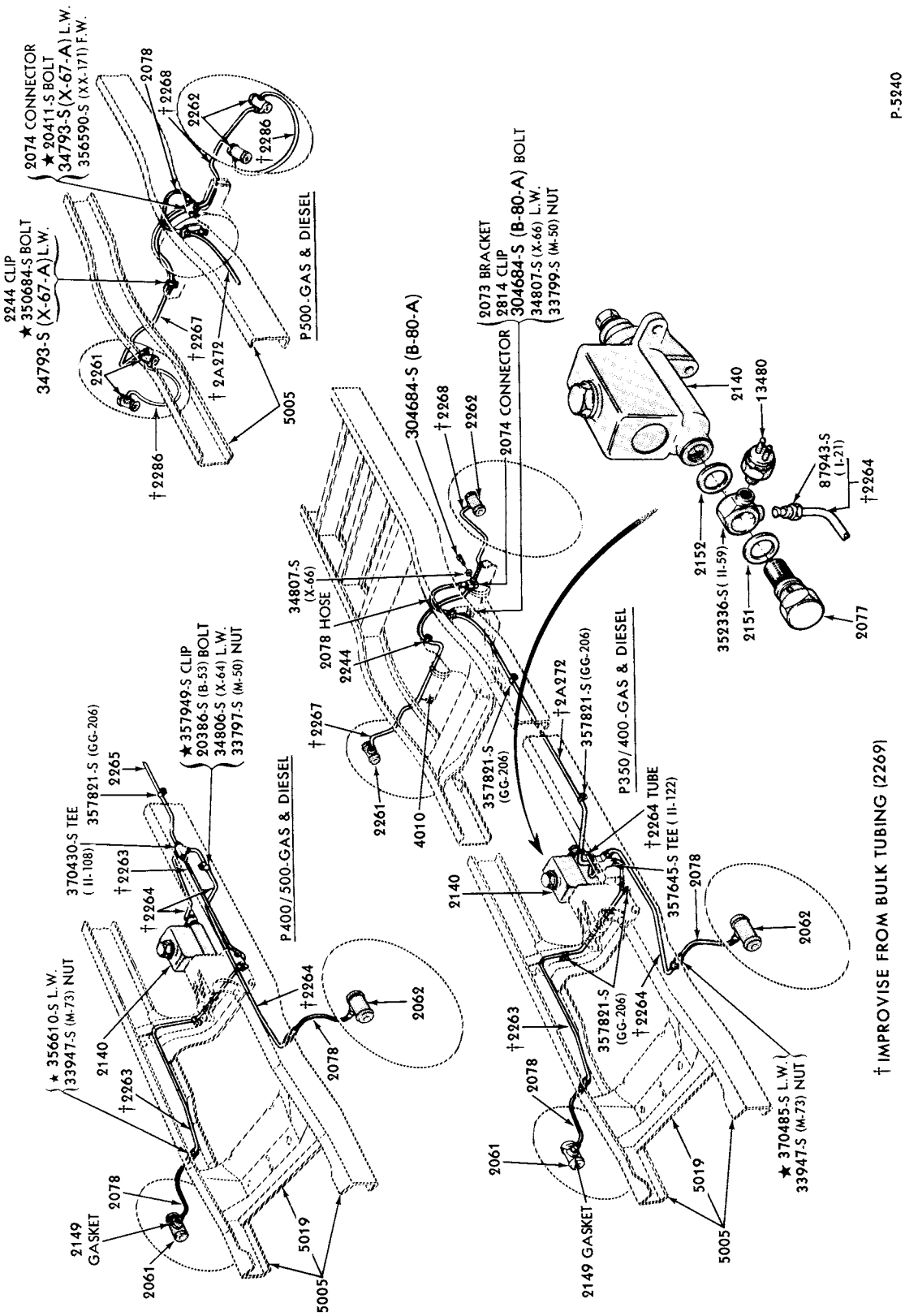

HYDRAULIC BRAKE SYSTEM
1973/77 P500

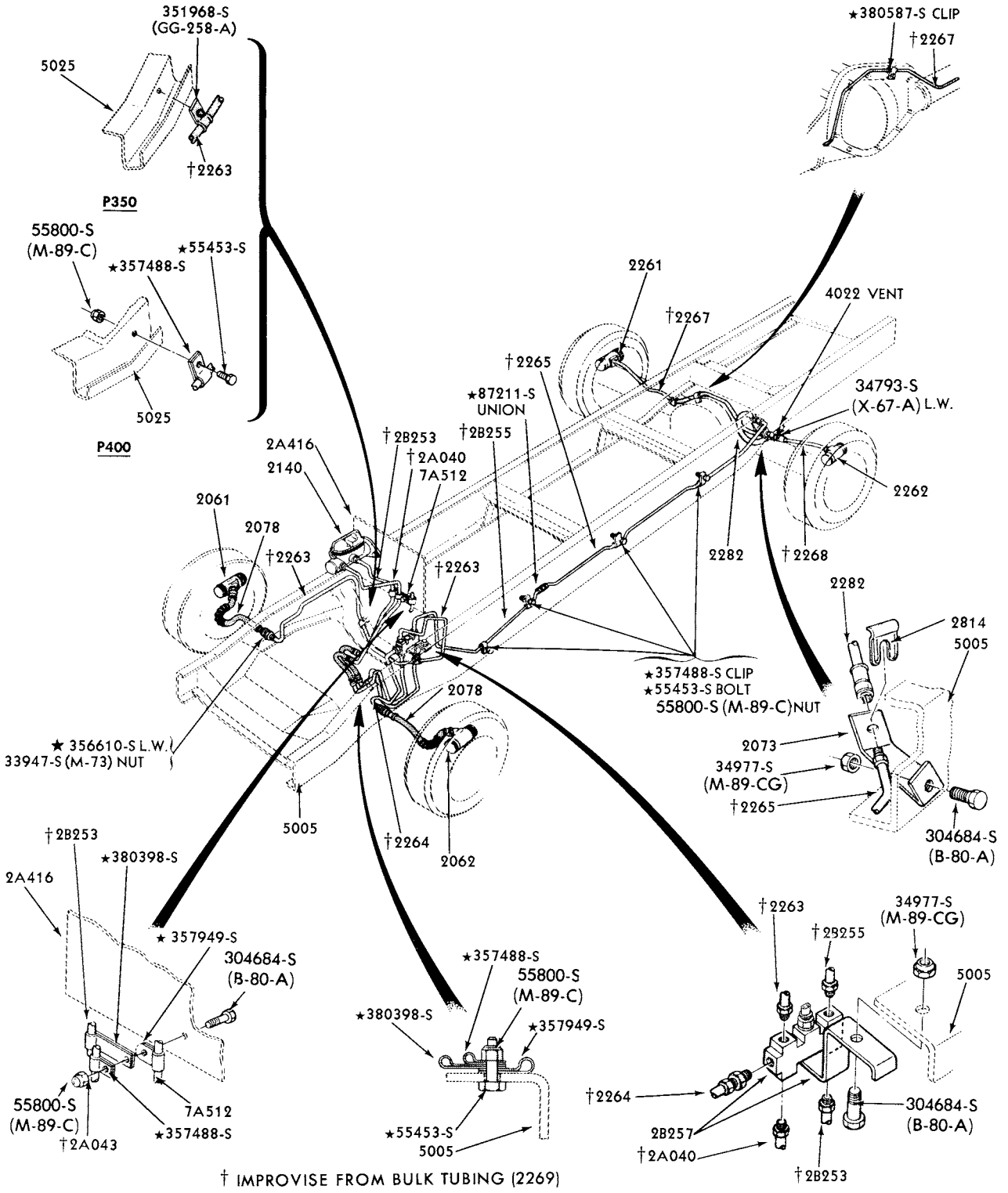

HYDRAULIC BRAKE SYSTEM
1973/76 P350/400

COPYRIGHT © 1979 — FORD MOTOR COMPANY DEARBORN, MICHIGAN

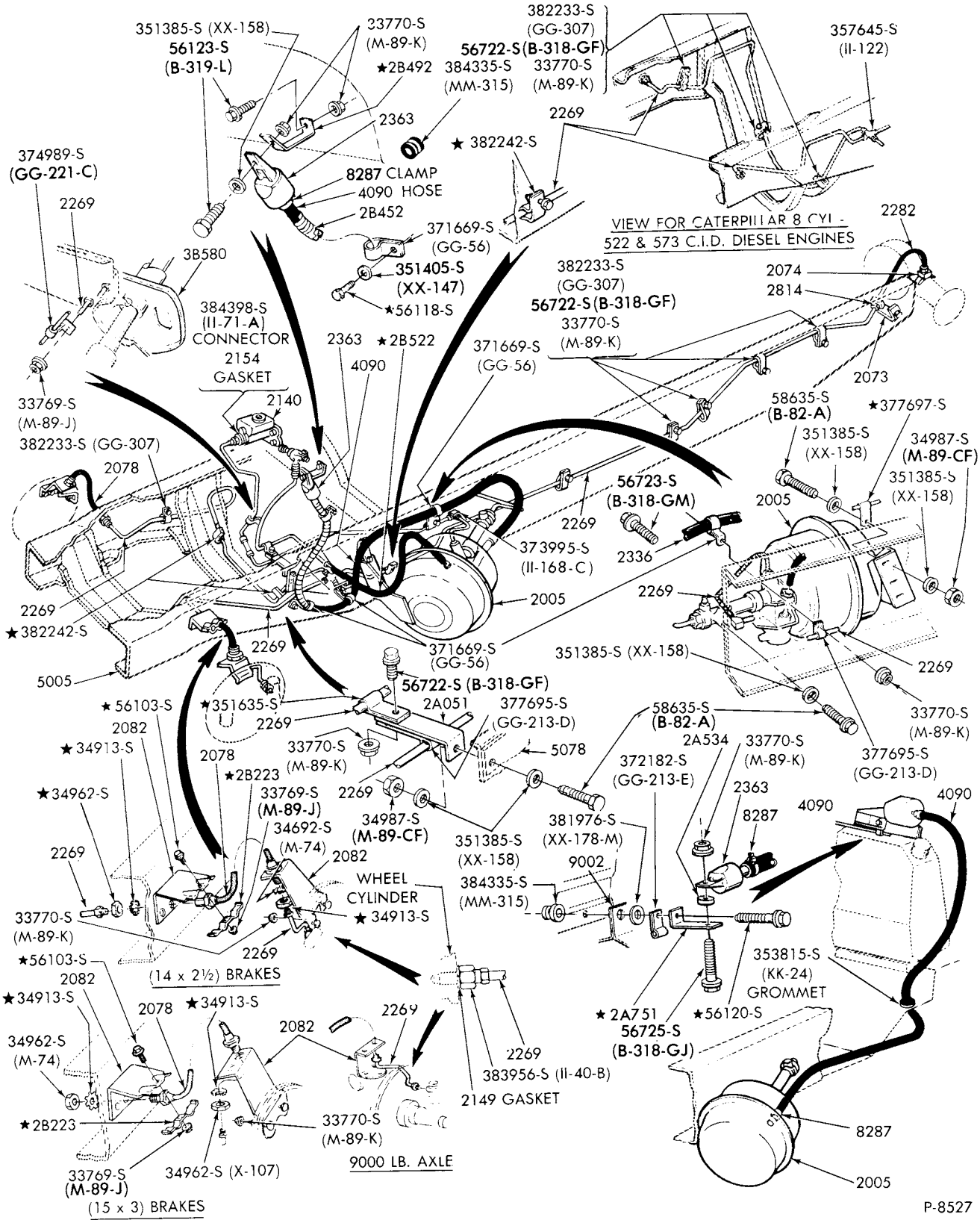

SINGLE HYDRAULIC BRAKE SYSTEM
1973/77 F500--w/FRAME MOUNTED BOOSTER

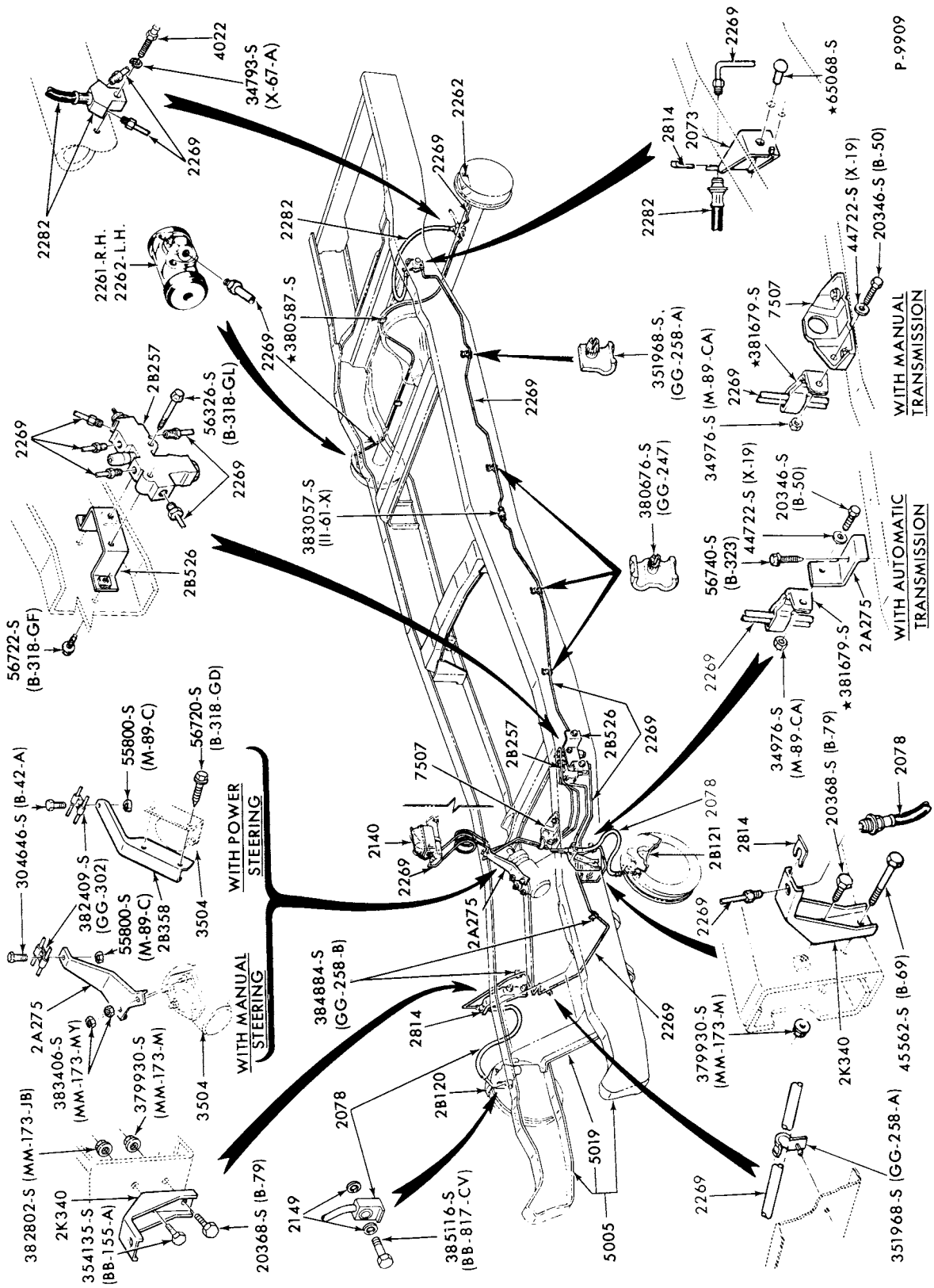

HYDRAULIC BRAKE SYSTEM

1973 F100--2/W/D and F250--2/W/D and 6200 GVW

COPYRIGHT © 1979 FORD MOTOR COMPANY, DEARBORN, MICHIGAN

1973/79 TRUCK SERIES 100/500

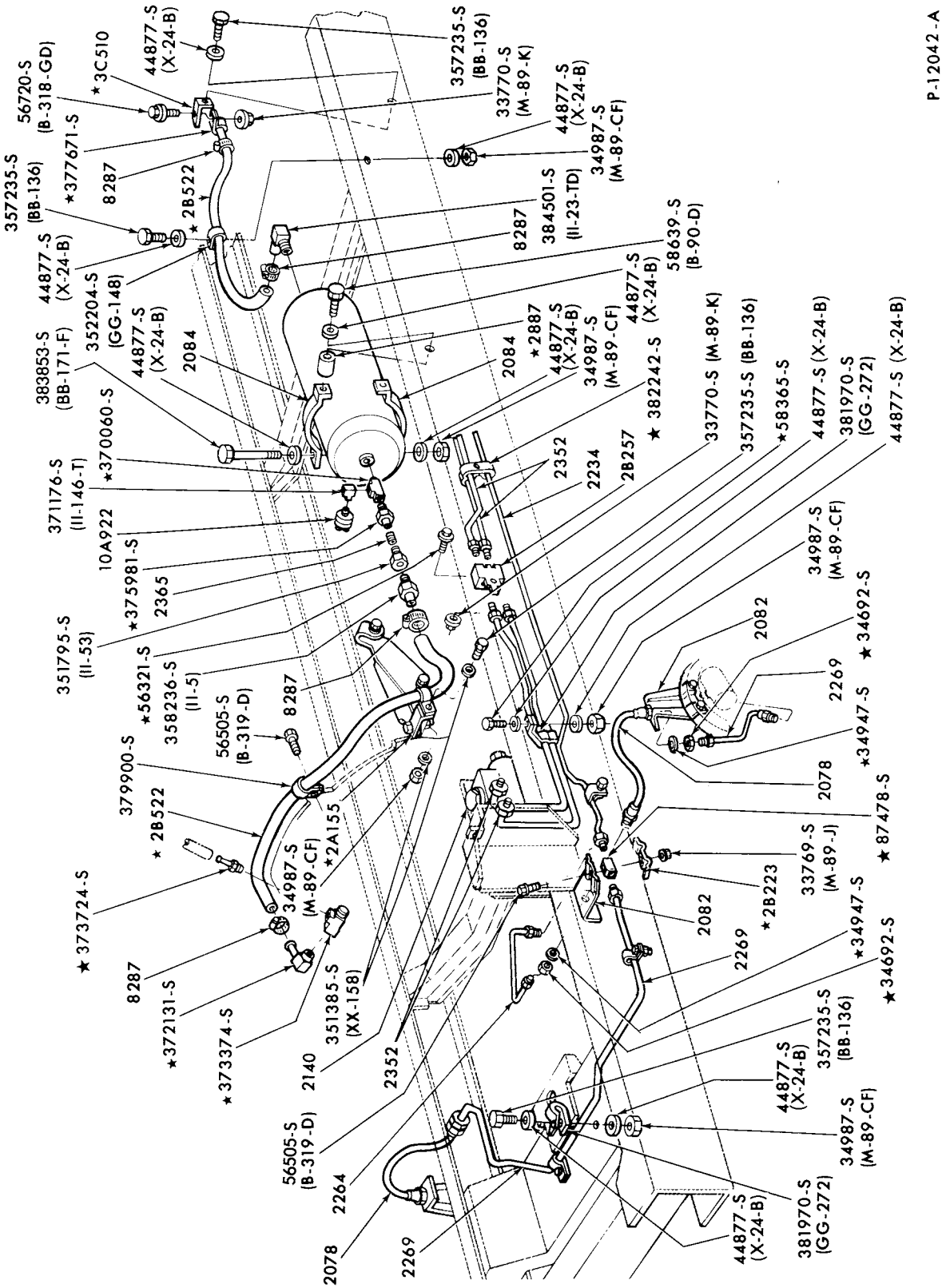

HYDRAULIC BRAKE SYSTEM-FRONT FRAME
(FOR REAR AXLE TUBING INSTALLATION, REFER TO PAGE 1)
1973/76 M450/500

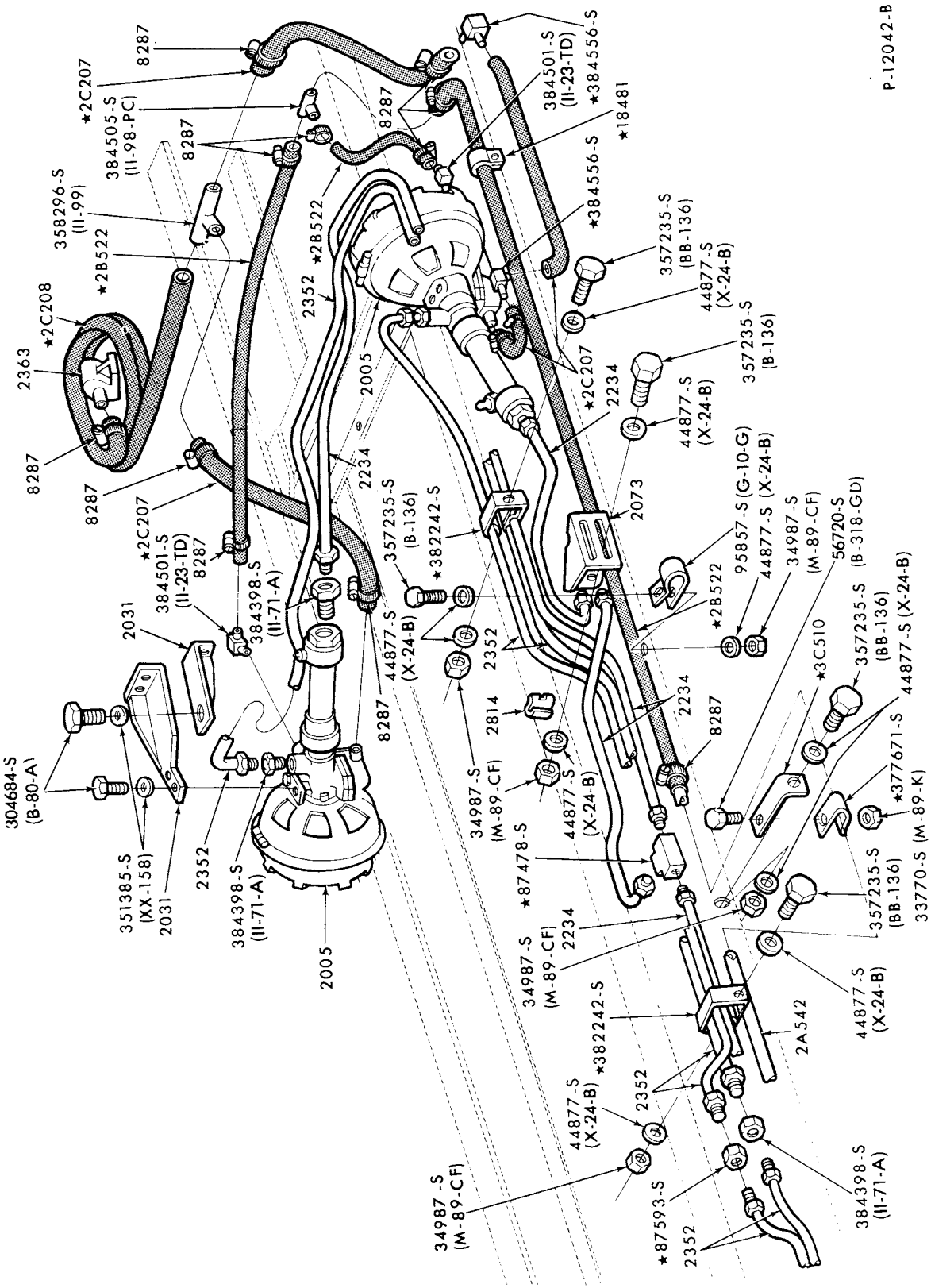

HYDRAULIC BRAKE SYSTEM-REAR FRAME
(FOR REAR AXLE TUBING INSTALLATION, REFER TO PAGE 1)
1973/76 M450/500

COPYRIGHT © 1979 FORD MOTOR COMPANY - DEARBORN, MICHIGAN

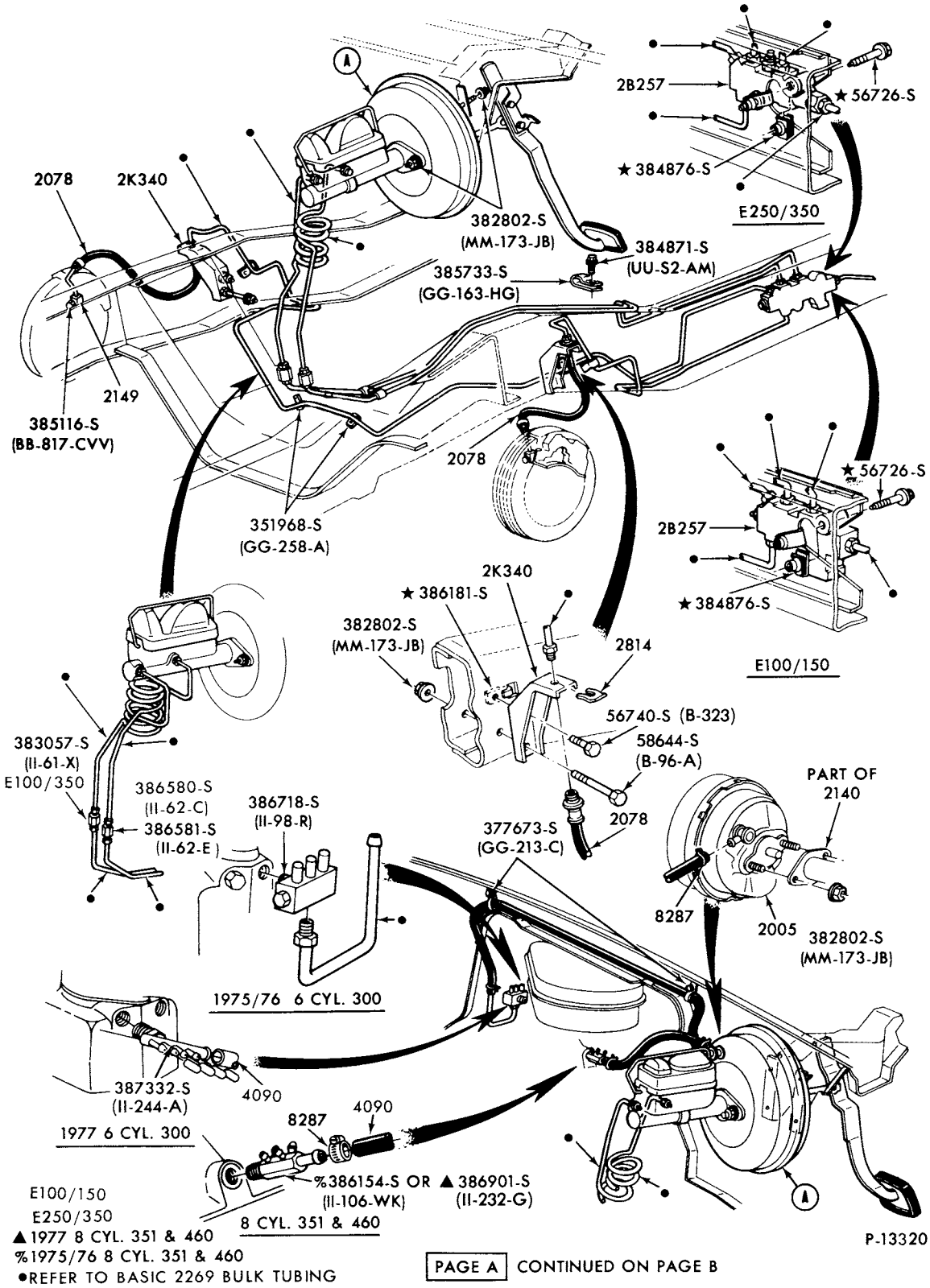

PAGE A CONTINUED ON PAGE B

HYDRAULIC BRAKE SYSTEM-FRONT SECTION-PAGE A (cont'd. on PAGE B)
1975/ E100/350

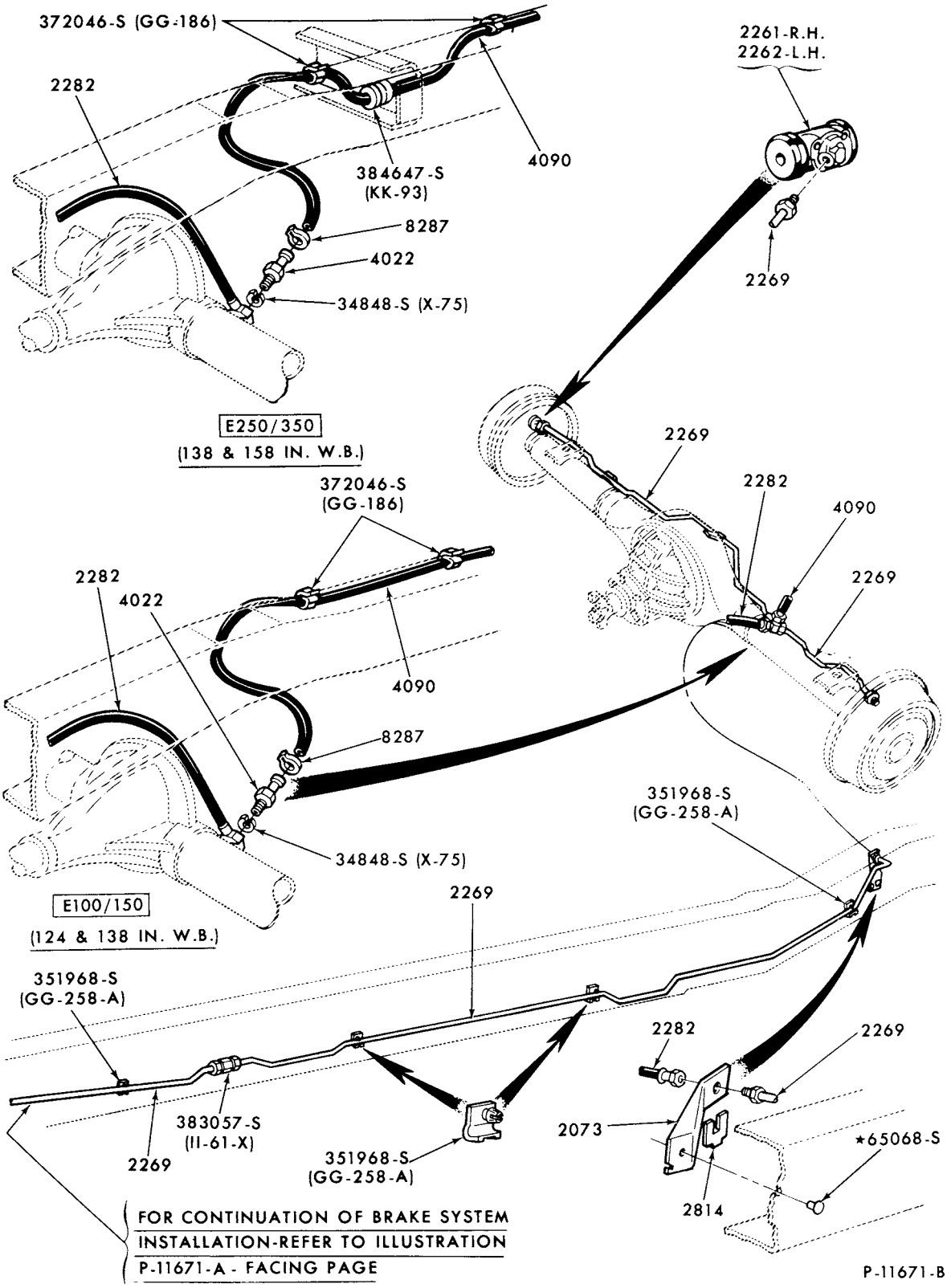

HYDRAULIC BRAKE SYSTEM-REAR SECTION-PAGE B (See PAGE A)
1975/ E100/350

COPYRIGHT © 1979 FORD MOTOR COMPANY DEARBORN, MICHIGAN

1973/79 TRUCK SERIES 100/500

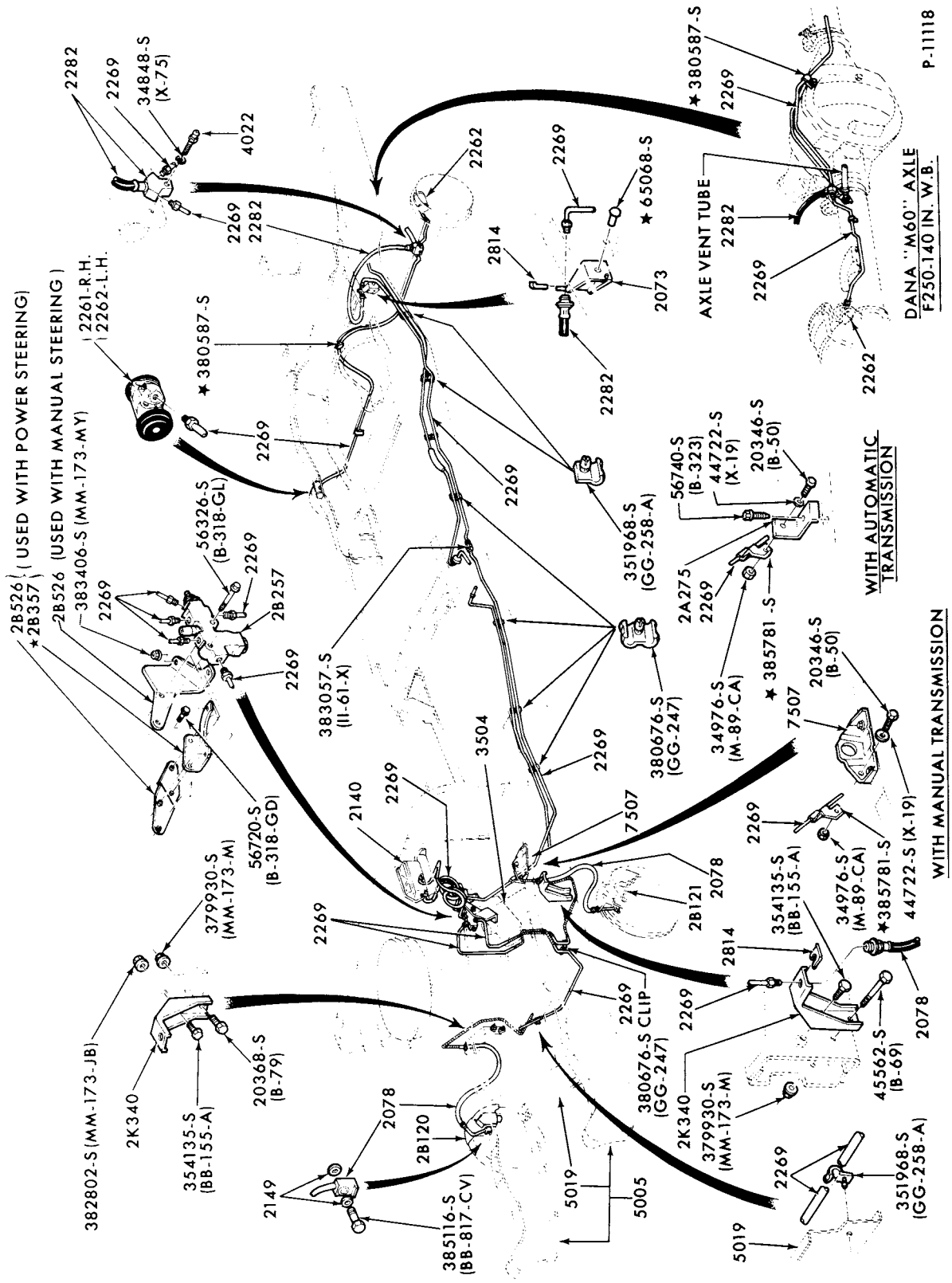

HYDRAULIC BRAKE SYSTEM - TYPICAL
1974/76 F100/250--2/W/D, F350-ALL GVW

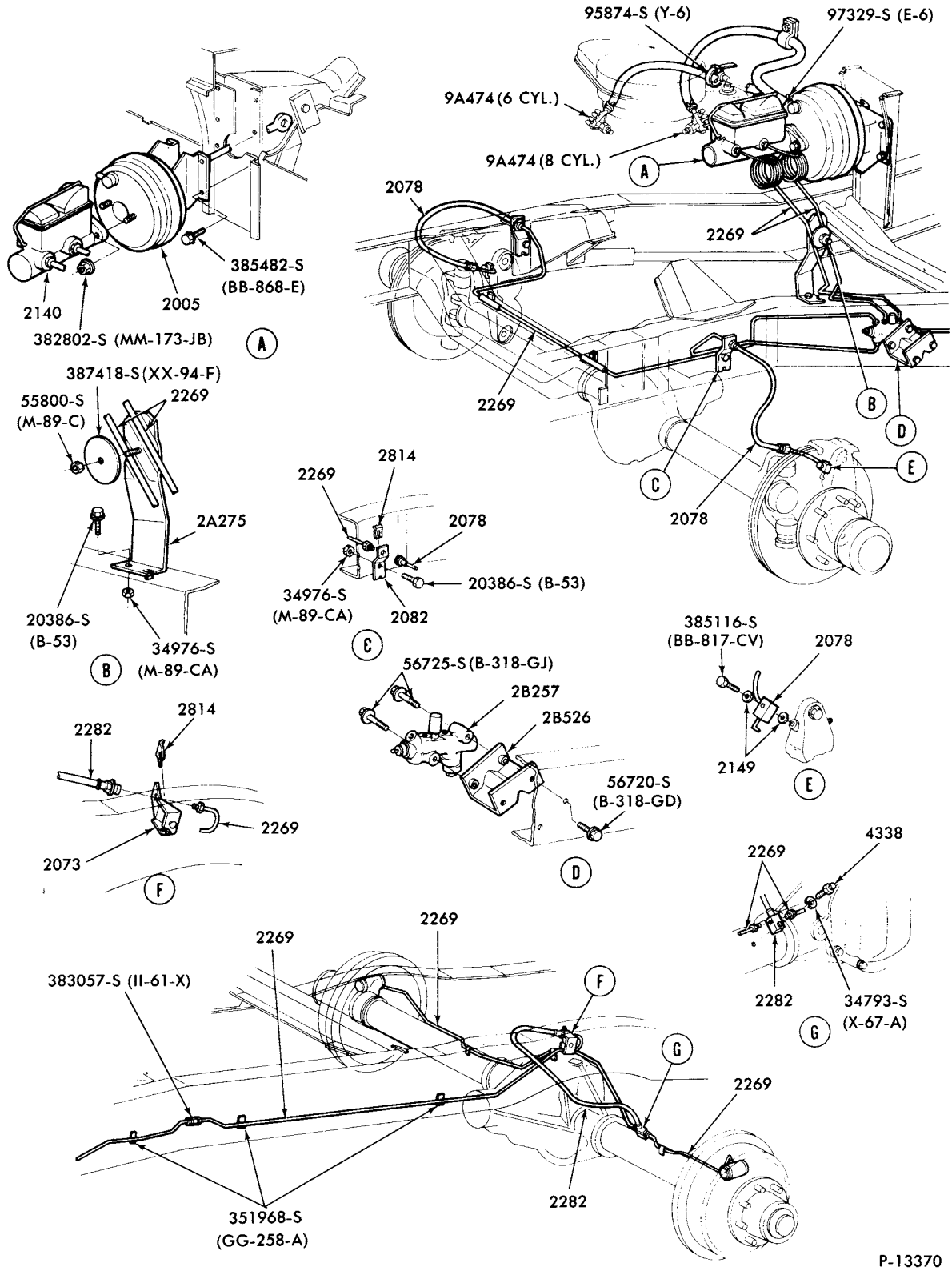

HYDRAULIC BRAKE SYSTEM
1976/ F250--4/W/D

COPYRIGHT © 1979 FORD MOTOR COMPANY, DEARBORN, MICHIGAN

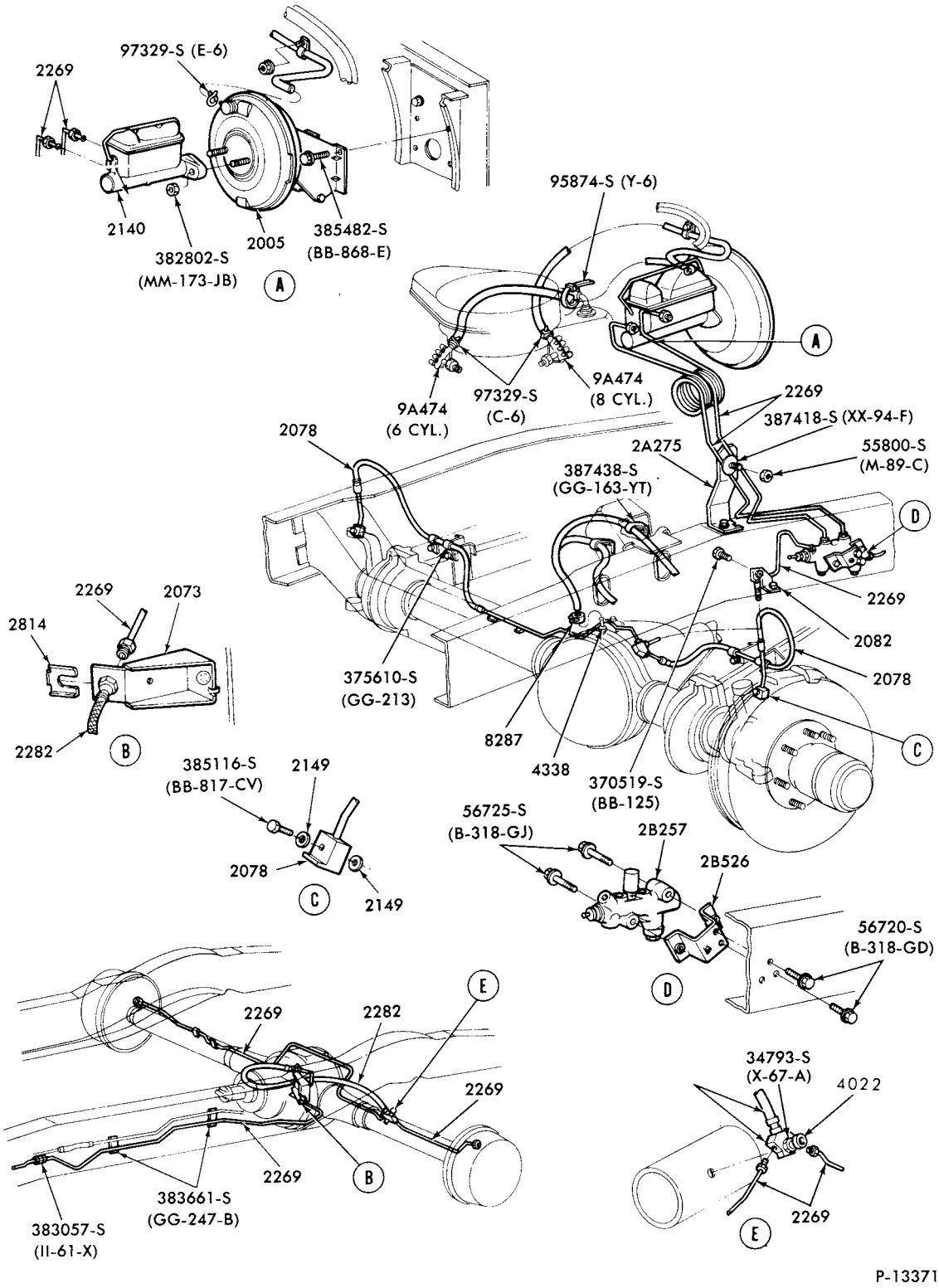

HYDRAULIC BRAKE SYSTEM
1976/ F150--4/W/D

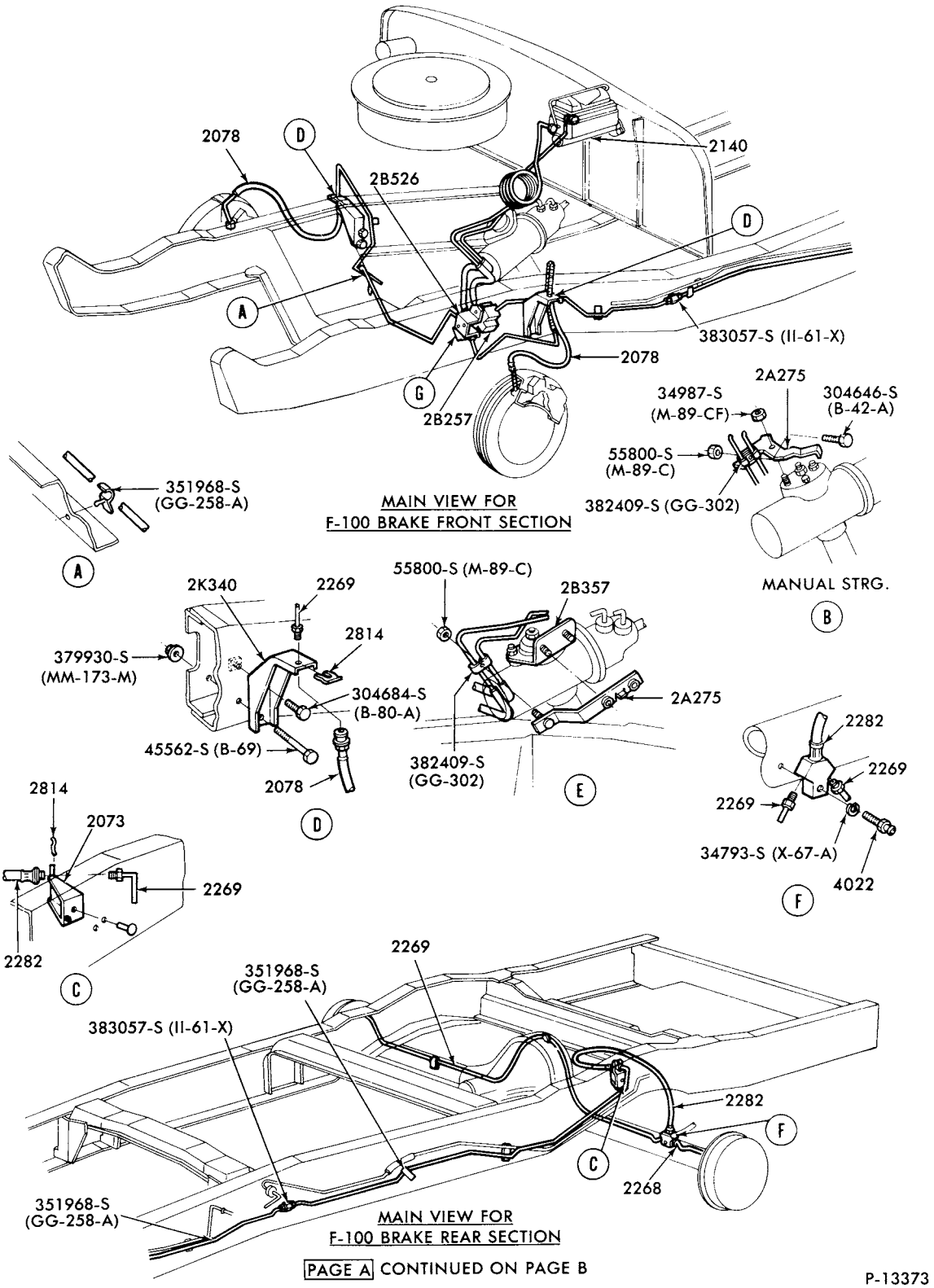

HYDRAULIC BRAKE SYSTEM-PAGE A (cont'd. on PAGE B)
1977 F100/350--2/W/D

COPYRIGHT © 1979 FORD MOTOR COMPANY, DEARBORN, MICHIGAN

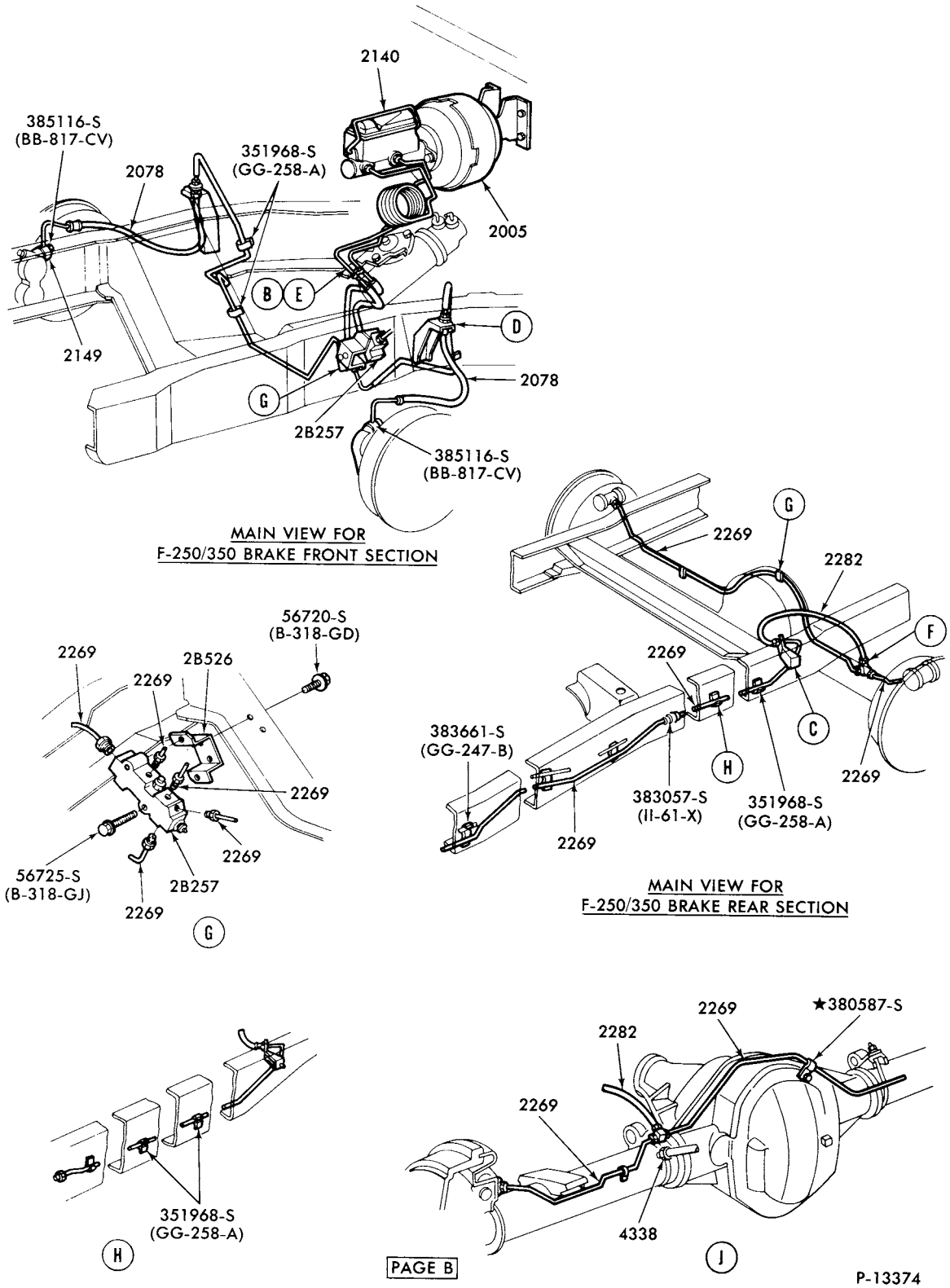

HYDRAULIC BRAKE SYSTEM-PAGE B (See PAGE A)
1977/ F100/350--2/W/D

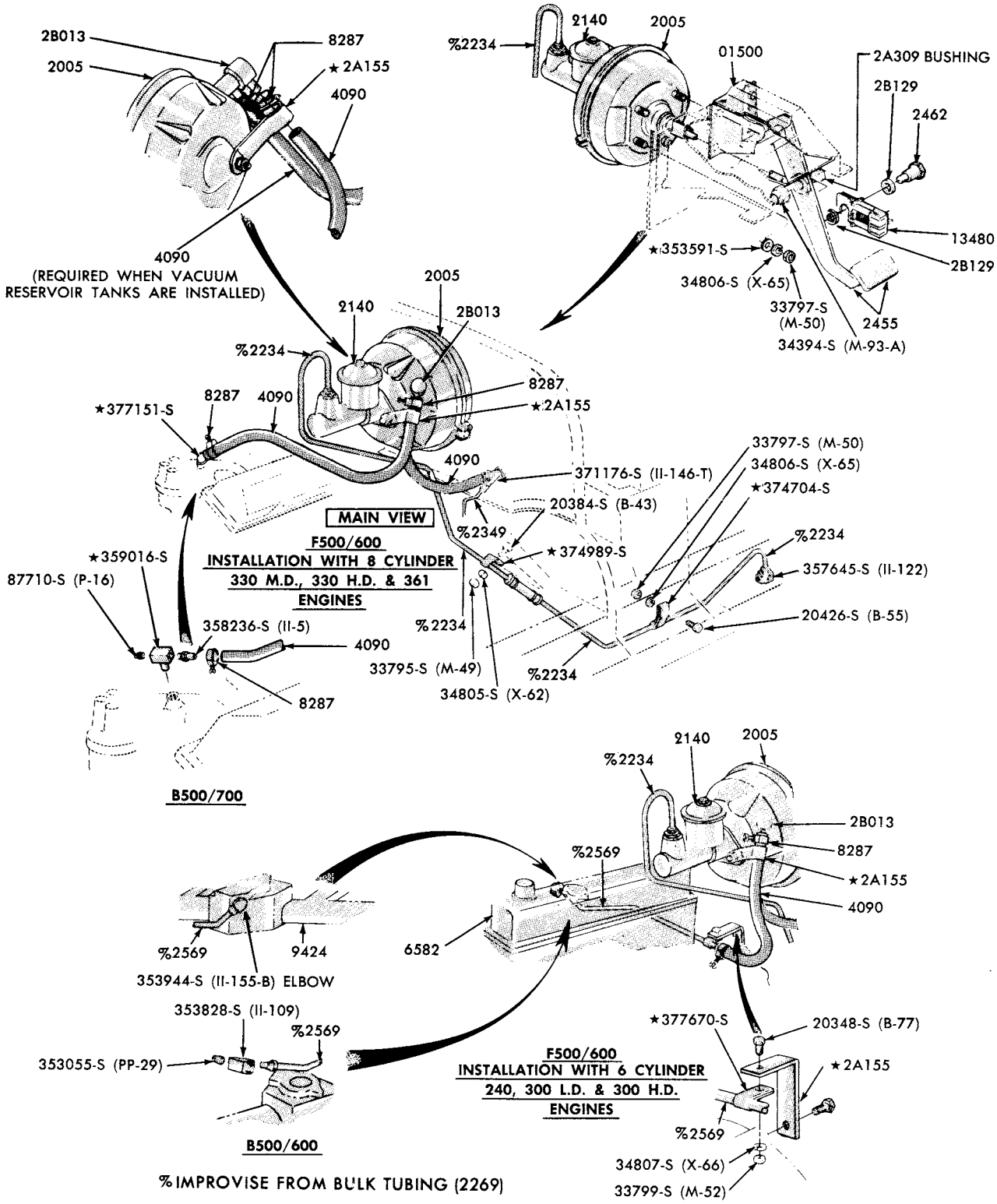

BRAKE BOOSTER (VACUUM-DASH MOUNTED) w/o RESERVOIR TANK
1973/77 B-F500

COPYRIGHT © 1979 —FORD MOTOR-DEARBORN, MICHIGAN
COMPANY

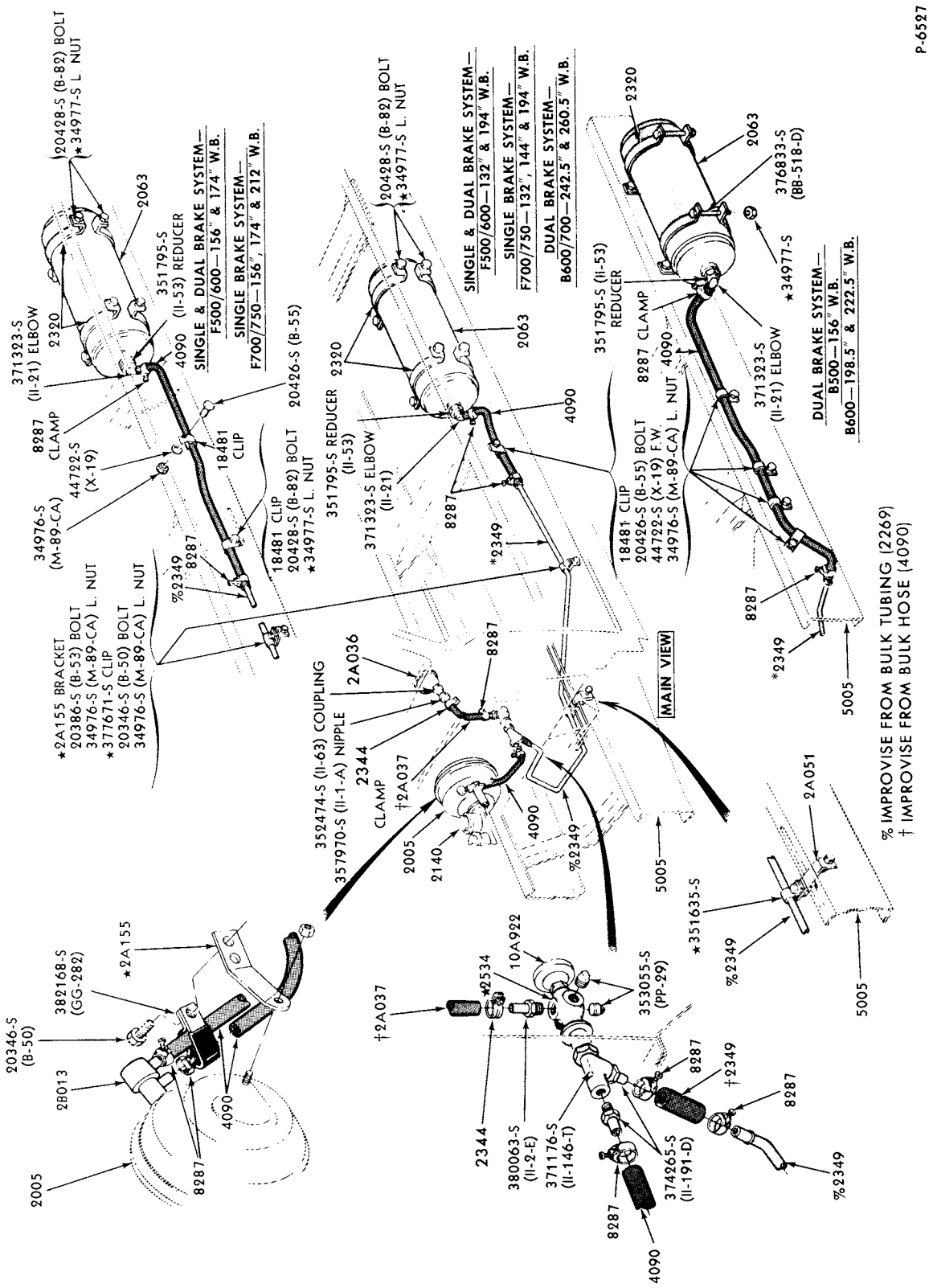

BRAKE BOOSTER (VACUUM-DASH MOUNTED) and RESERVOIR TANK
(FOR RELATED BOOSTER INSTALLATION, REFER TO SECTION 22, PAGE 3)
1973/74 B500
1973/77 F500

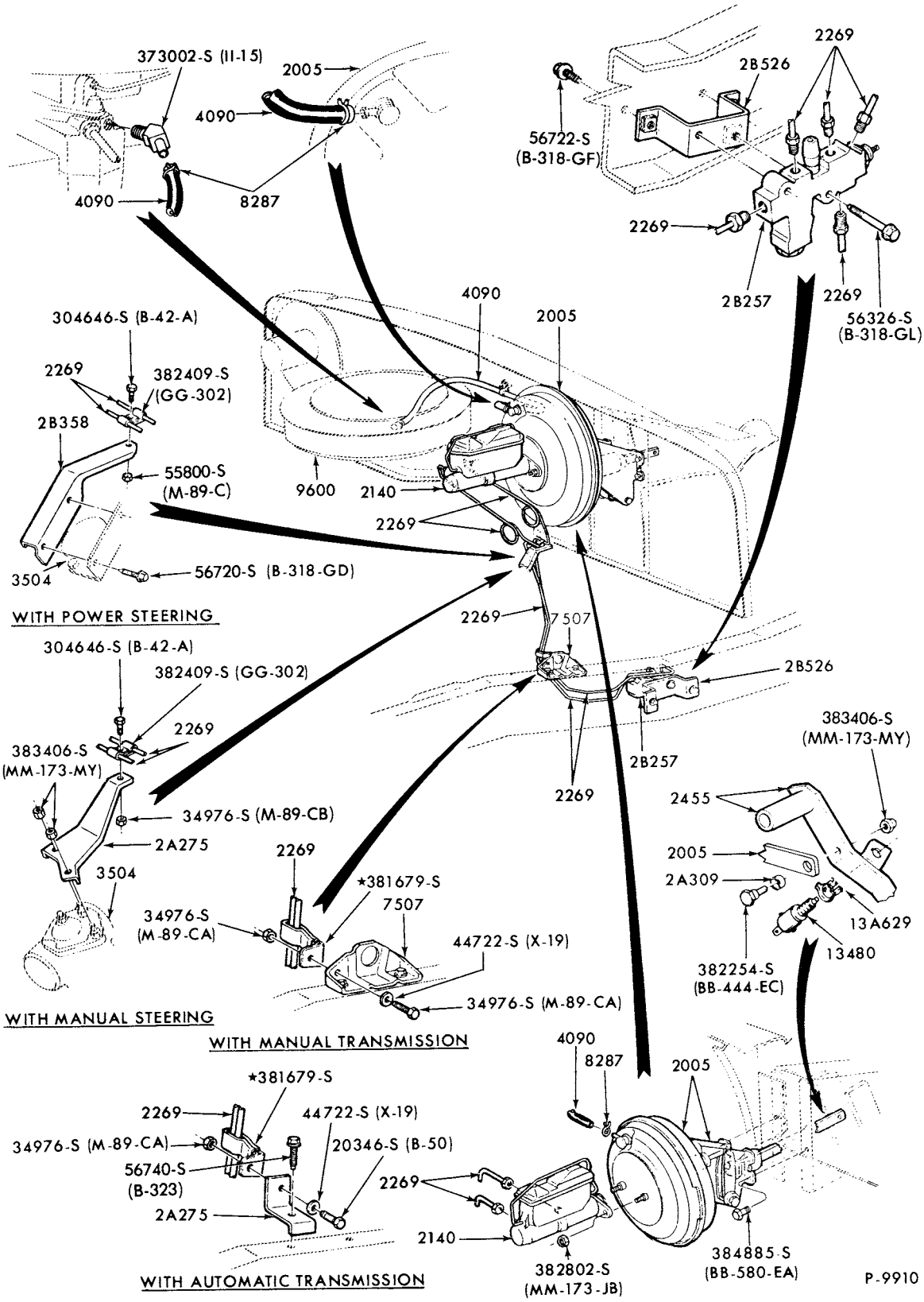

BRAKE BOOSTER (VACUUM-DASH MOUNTED)-BENDIX DIAPHRAGM

1973 F100 and F250--2/W/D and 6200 GVW

COPYRIGHT © 1979 — FORD MARKETING CORPORATION — DEARBORN, MICHIGAN

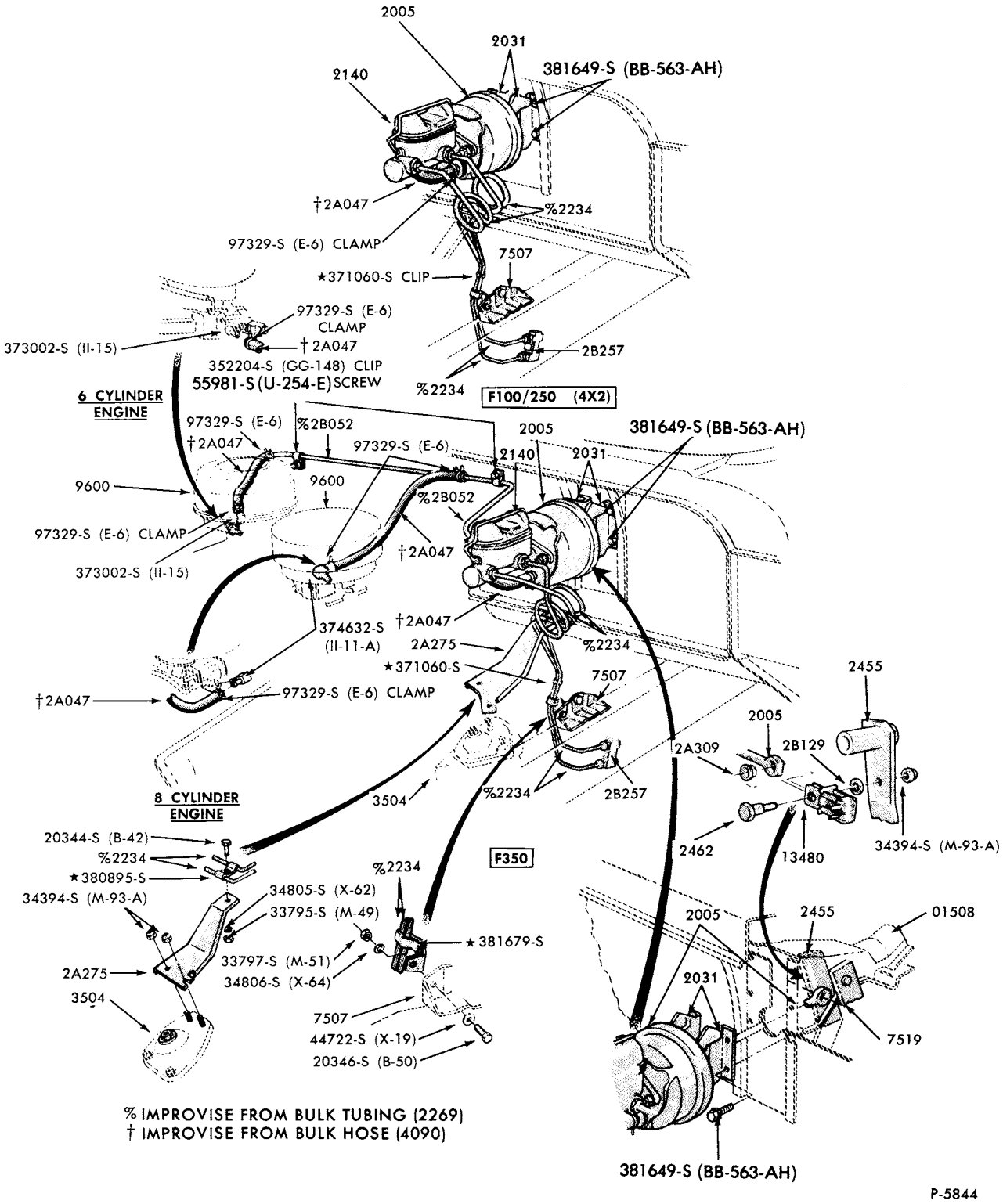

% IMPROVISE FROM BULK TUBING (2269)
† IMPROVISE FROM BULK HOSE (4090)

BRAKE BOOSTER (VACUUM-DASH MOUNTED)-BENDIX DIAPHRAGM
1973 F250--6900, 7500, 8100 GVW--2/W/D and F350

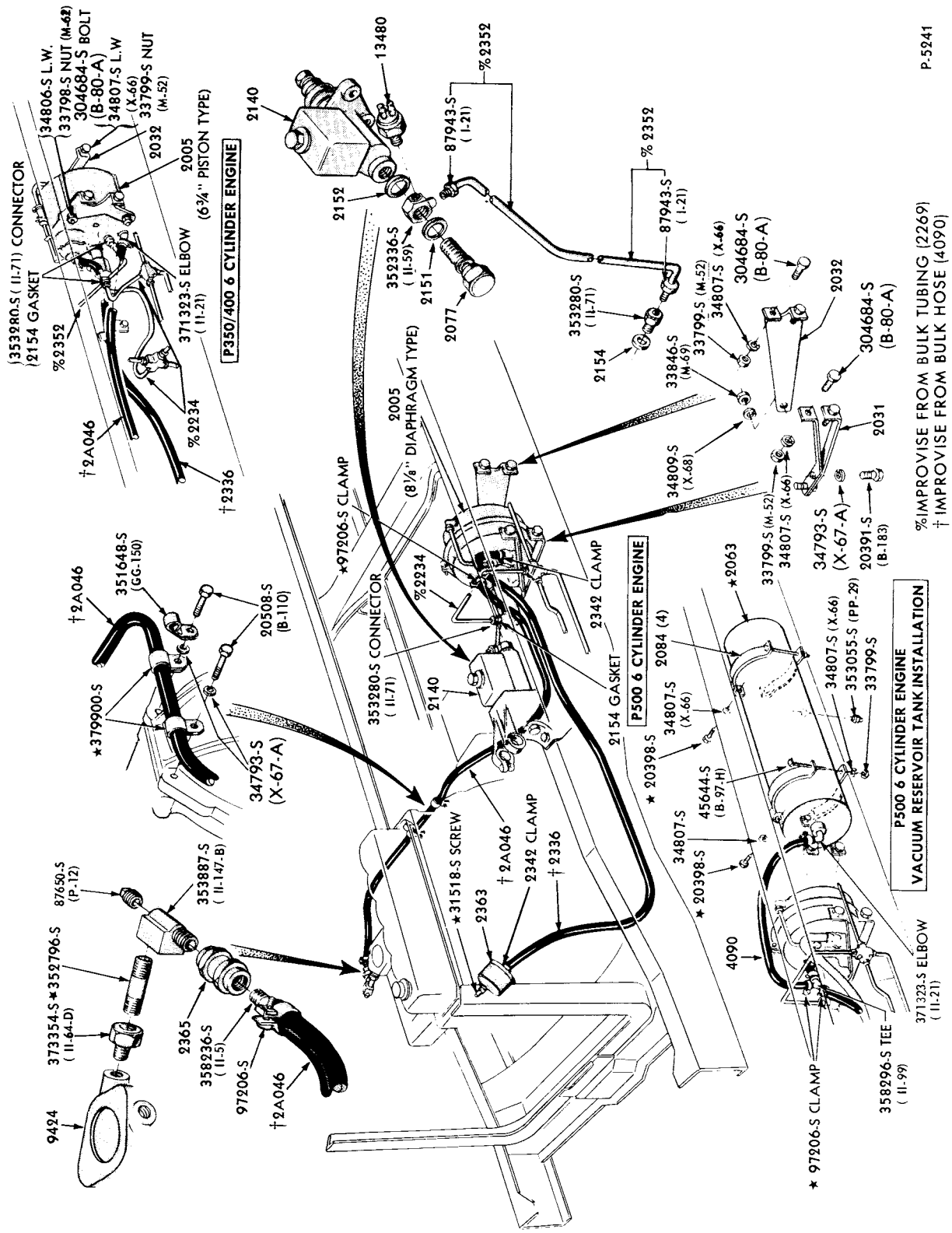

BRAKE BOOSTER (VACUUM-FRAME MOUNTED)
1973/76 P350/400
1976/77 P500

COPYRIGHT © 1979 FORD MOTOR COMPANY, DEARBORN, MICHIGAN

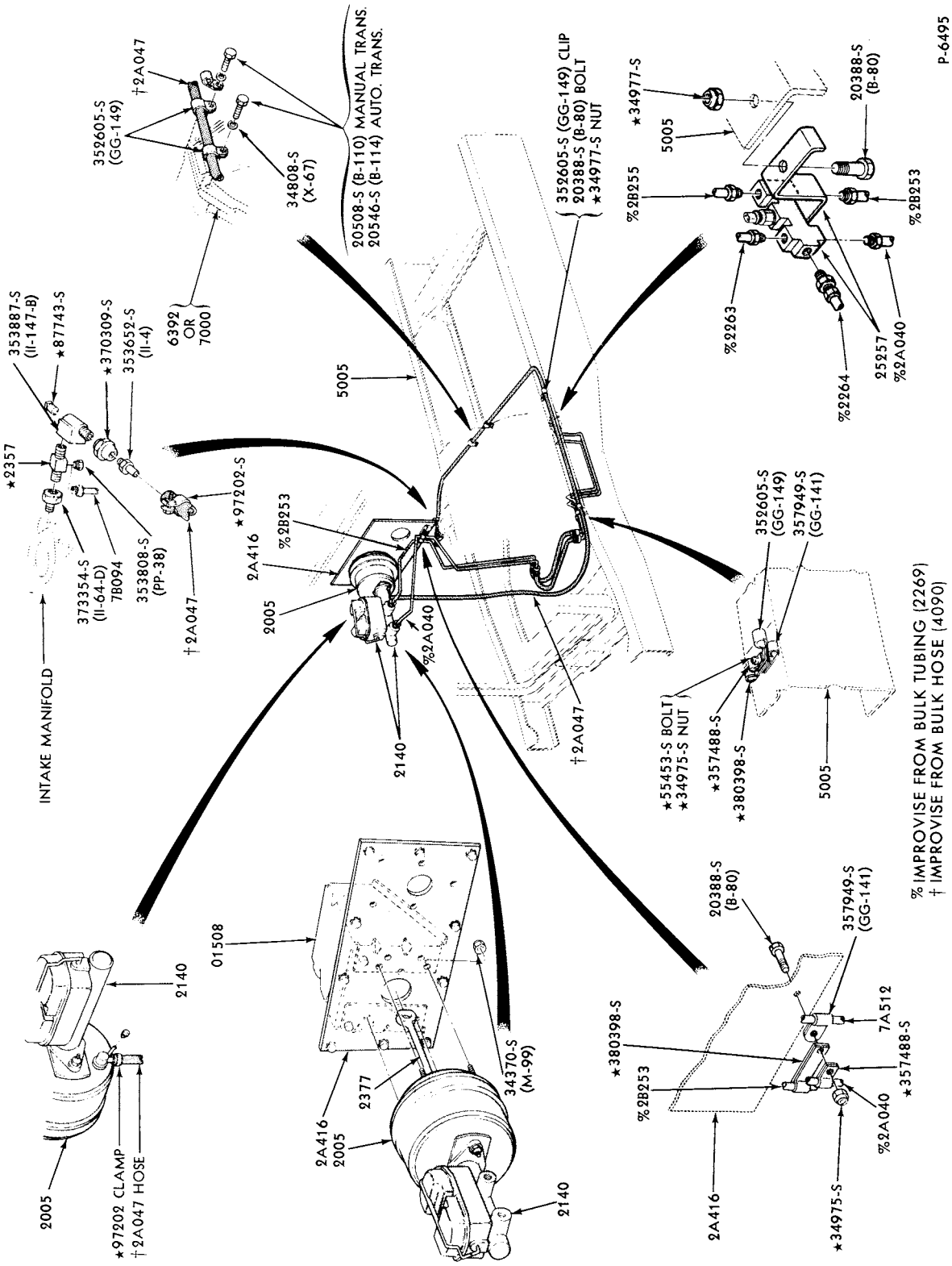

BRAKE BOOSTER (VACUUM-DASH MOUNTED)
1973/76 P350/400

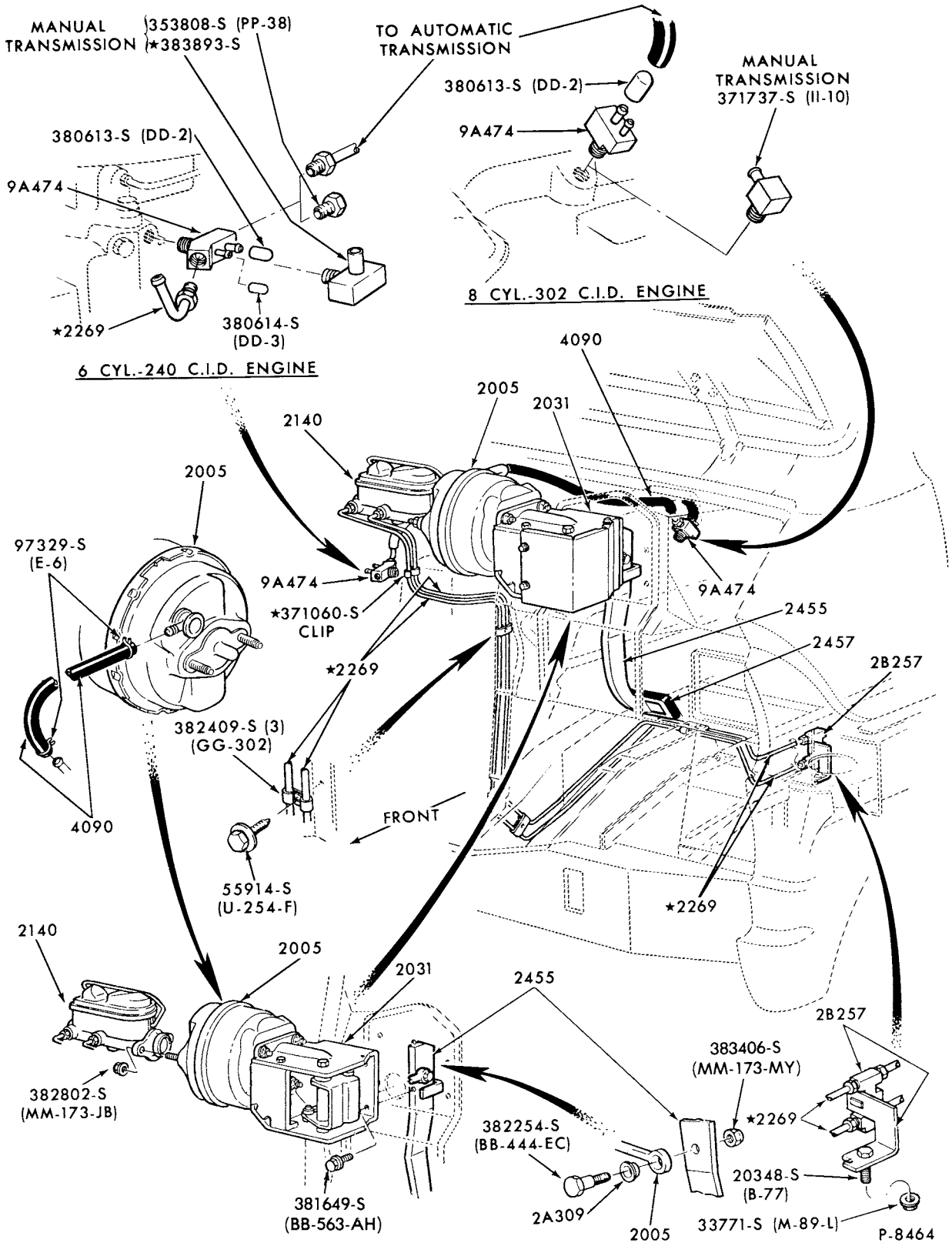

BRAKE BOOSTER (VACUUM-DASH MOUNTED)
1973/ E100/350

COPYRIGHT © 1979 FORD MOTOR COMPANY DEARBORN, MICHIGAN

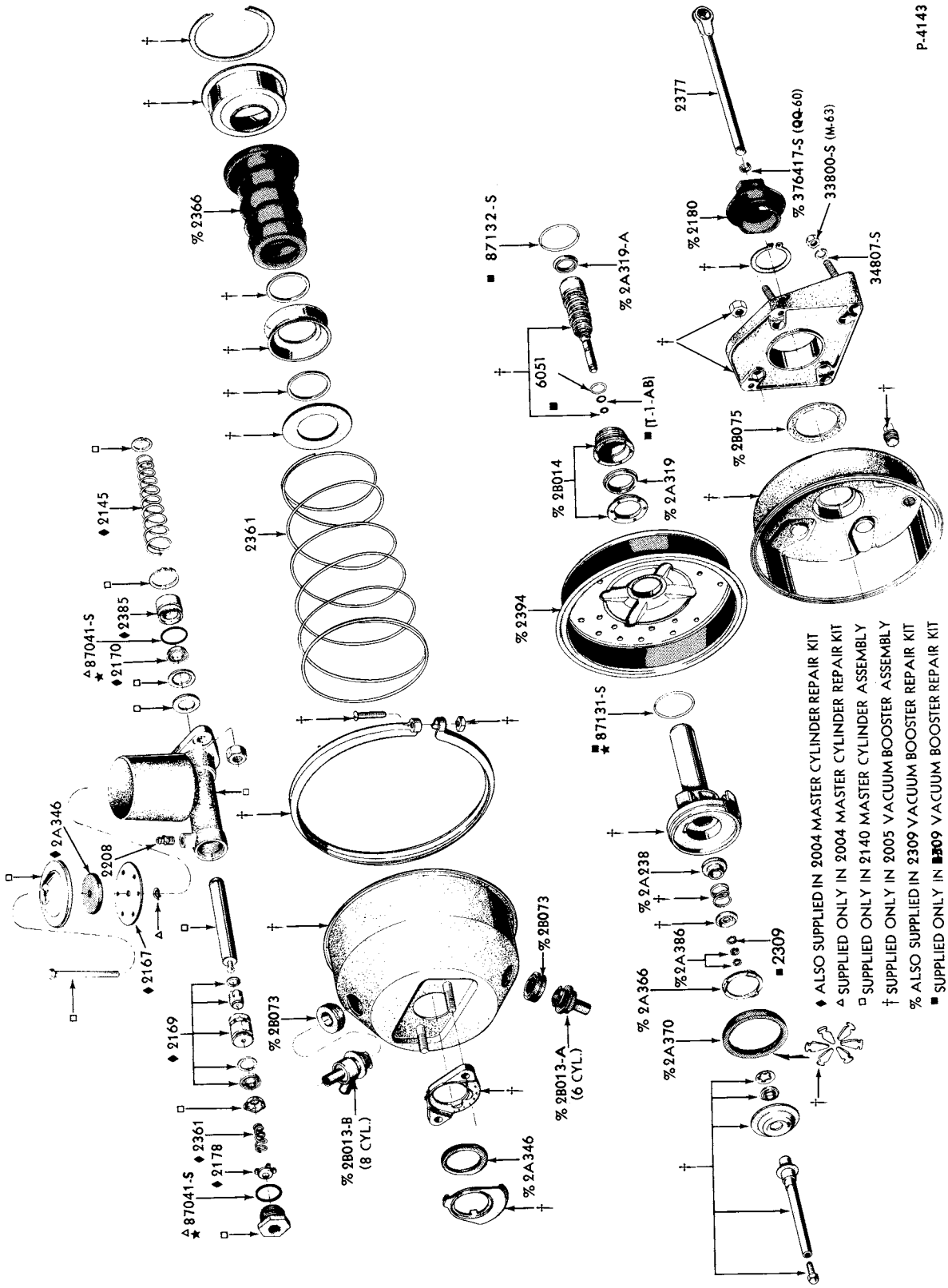

BRAKE BOOSTER (VACUUM-DASH MOUNTED)-MIDLAND-ROSS
1973/ F350 and 1973/77 B-F-P500

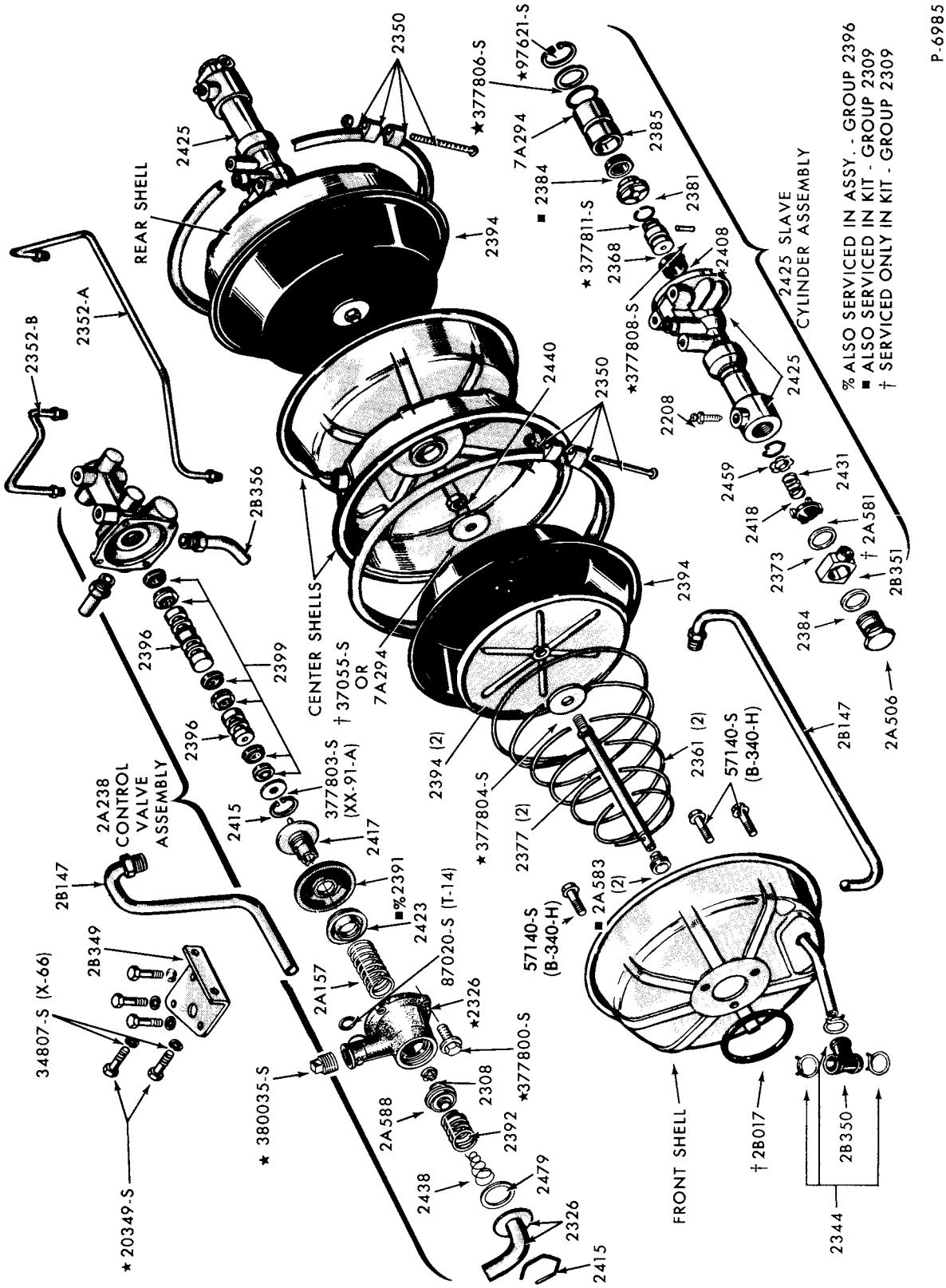

BRAKE BOOSTER (DUAL HYDRAULIC VACUUM)-BENDIX-TYPICAL
1973/77 B-F500 and 1973/76 P350/400--w/SPLIT BRAKE SYSTEM

COPYRIGHT © 1979 FORD MOTOR COMPANY - DEARBORN, MICHIGAN

1973/79 TRUCK SERIES 100/500

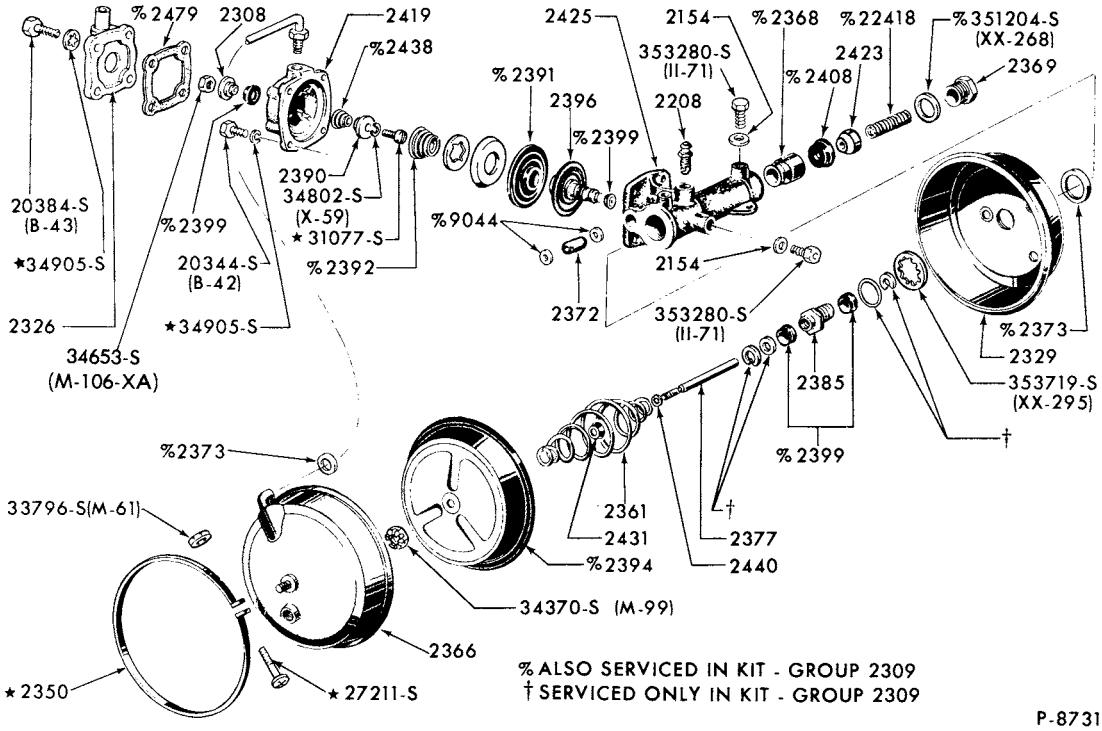

BRAKE BOOSTER - MIDLAND-ROSS 10" HY-POWER C-462-C
1973/77 P500

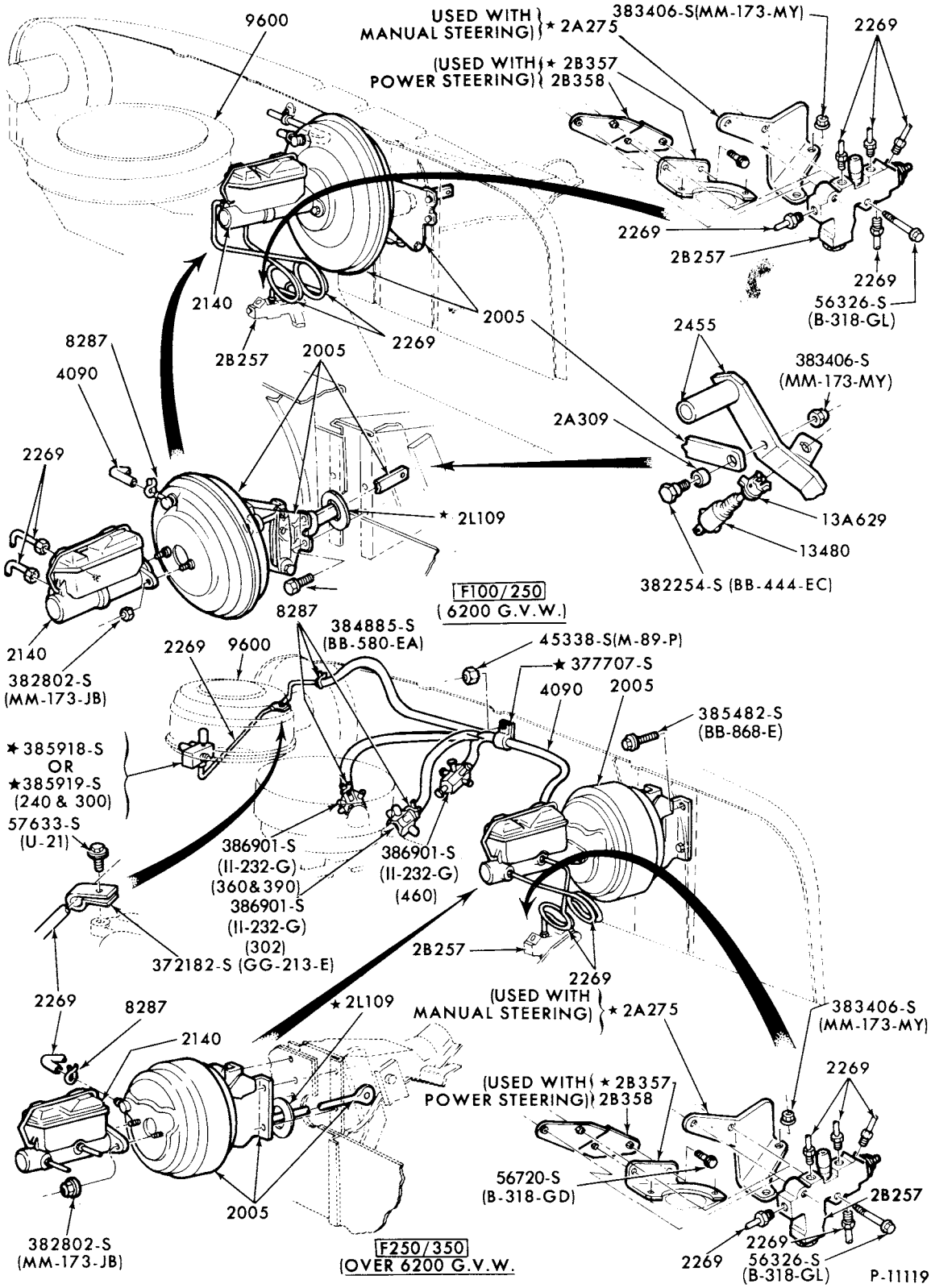

BRAKE BOOSTER (VACUUM-DASH MOUNTED)-BENDIX DIAPHRAGM
1974/ F100/350--2/W/D and ALL GVW

COPYRIGHT © 1979 FORD MOTOR COMPANY · DEARBORN, MICHIGAN

1973/79 TRUCK SERIES 100/500

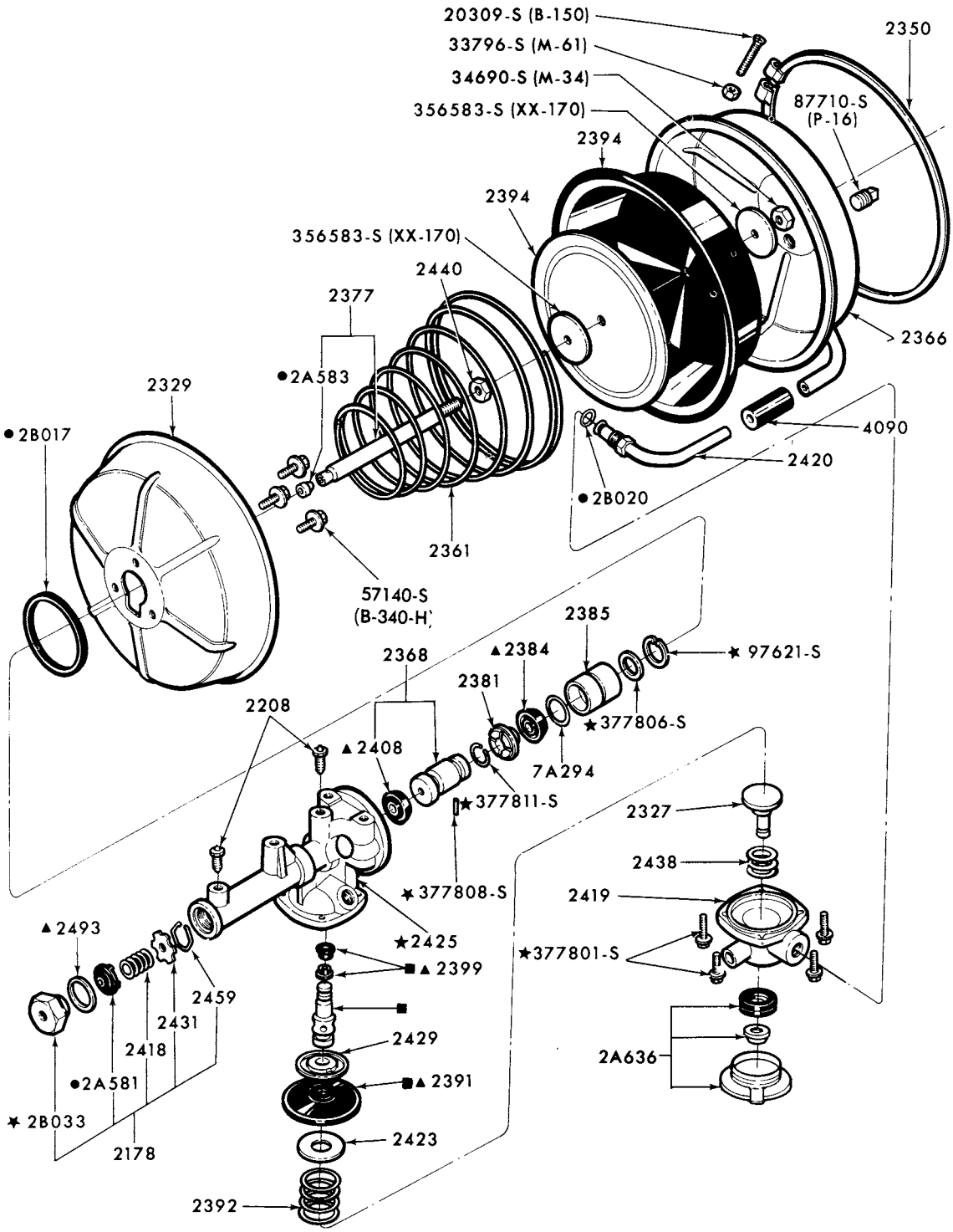

▲ALSO SERVICED IN KIT-GROUP 2309
■ALSO SERVICED IN ASSY.-GROUP 2396
●SERVICED ONLY IN KIT-GROUP 2309

P-11526

BRAKE BOOSTER (VACUUM-12 3/4")-BENDIX SINGLE DIAPHRAGM
1973/76 M450/500

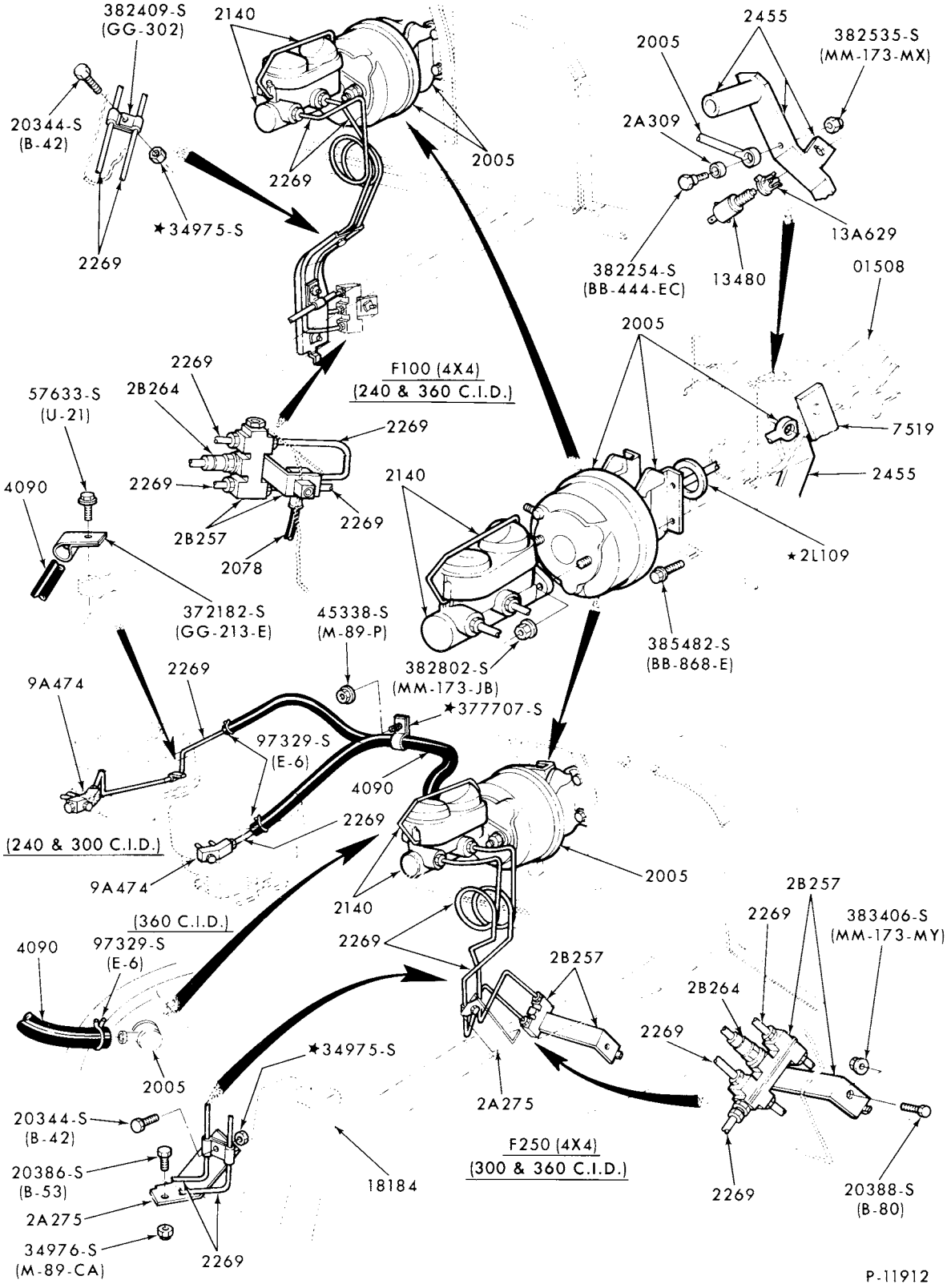

BRAKE BOOSTER (VACUUM-DASH MOUNTED)-BENDIX DIAPHRAGM
1973/ F100/350--4/W/D

COPYRIGHT © 1979 FORD MOTOR COMPANY DEARBORN, MICHIGAN

1973/79 TRUCK SERIES 100/500

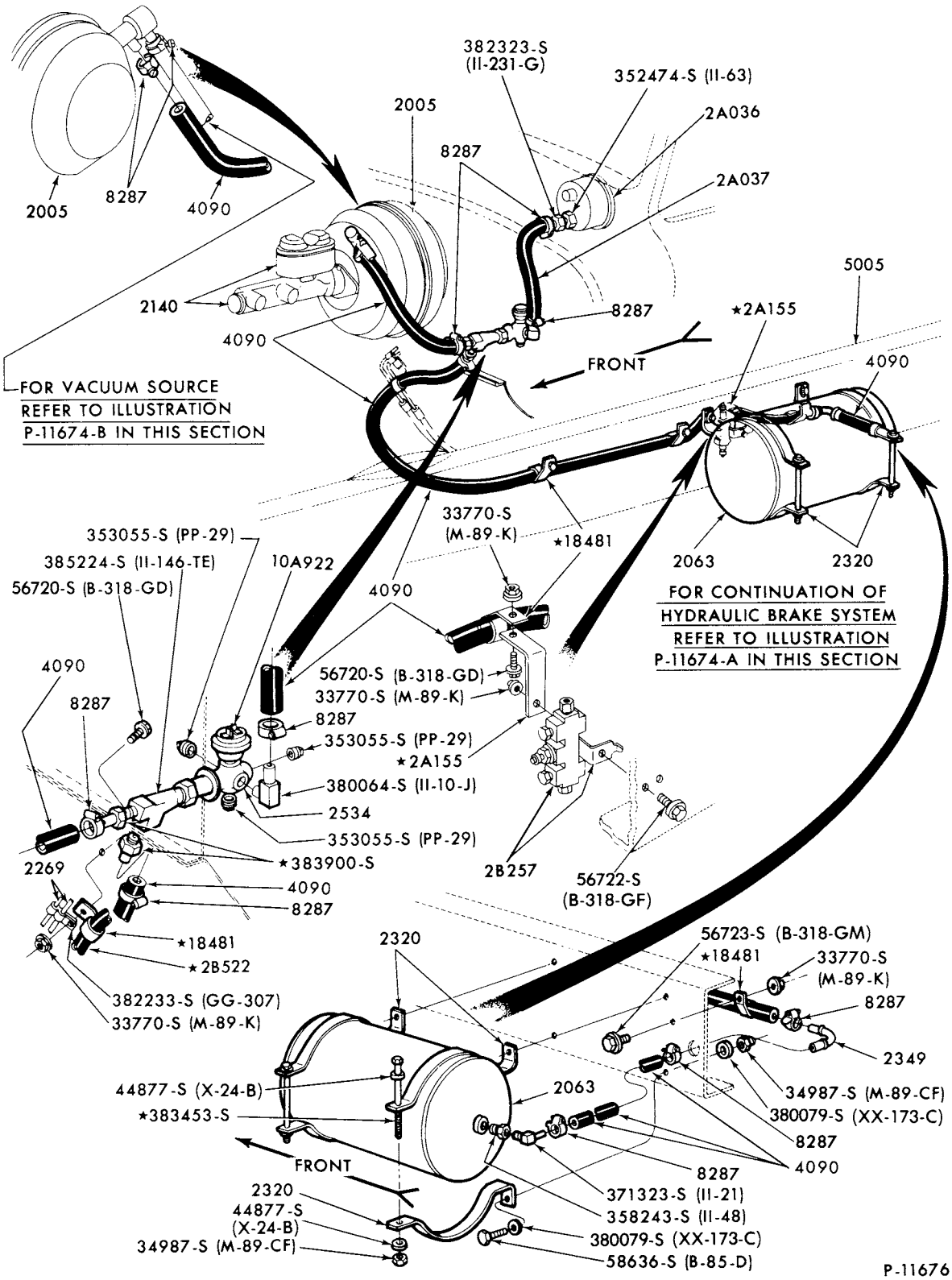

BRAKE BOOSTER (VACUUM-DASH MOUNTED) and RESERVOIR TANK
(FOR RELATED BOOSTER INSTALLATION, REFER TO SECTION 22 PAGE 3)
1975/77 B500

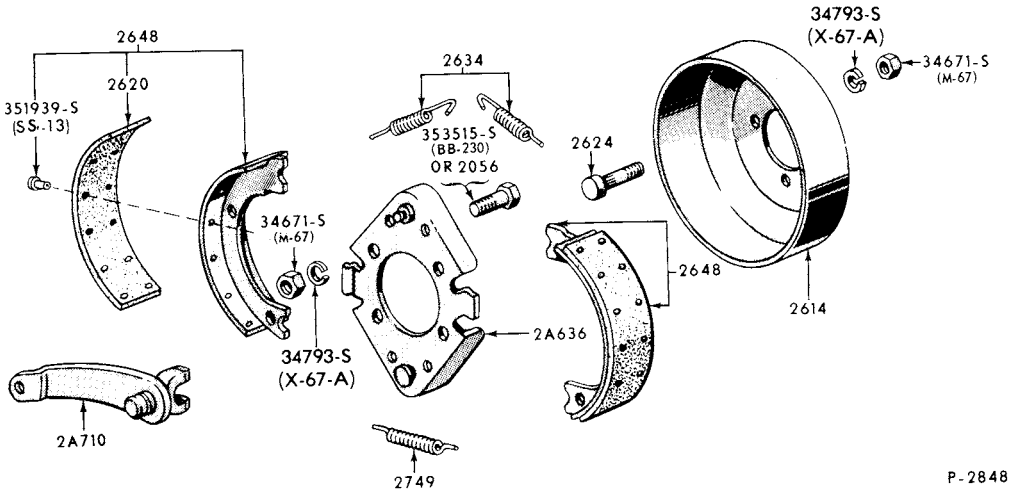

PARKING BRAKE PARTS (TRANS. INTERNAL SHOE TYPE)-9" x 2" and 9" x 3"
1973/77 F350, B-F-P500 and 1973/76 P350/400

COPYRIGHT © 1979 FORD MOTOR COMPANY DEARBORN, MICHIGAN

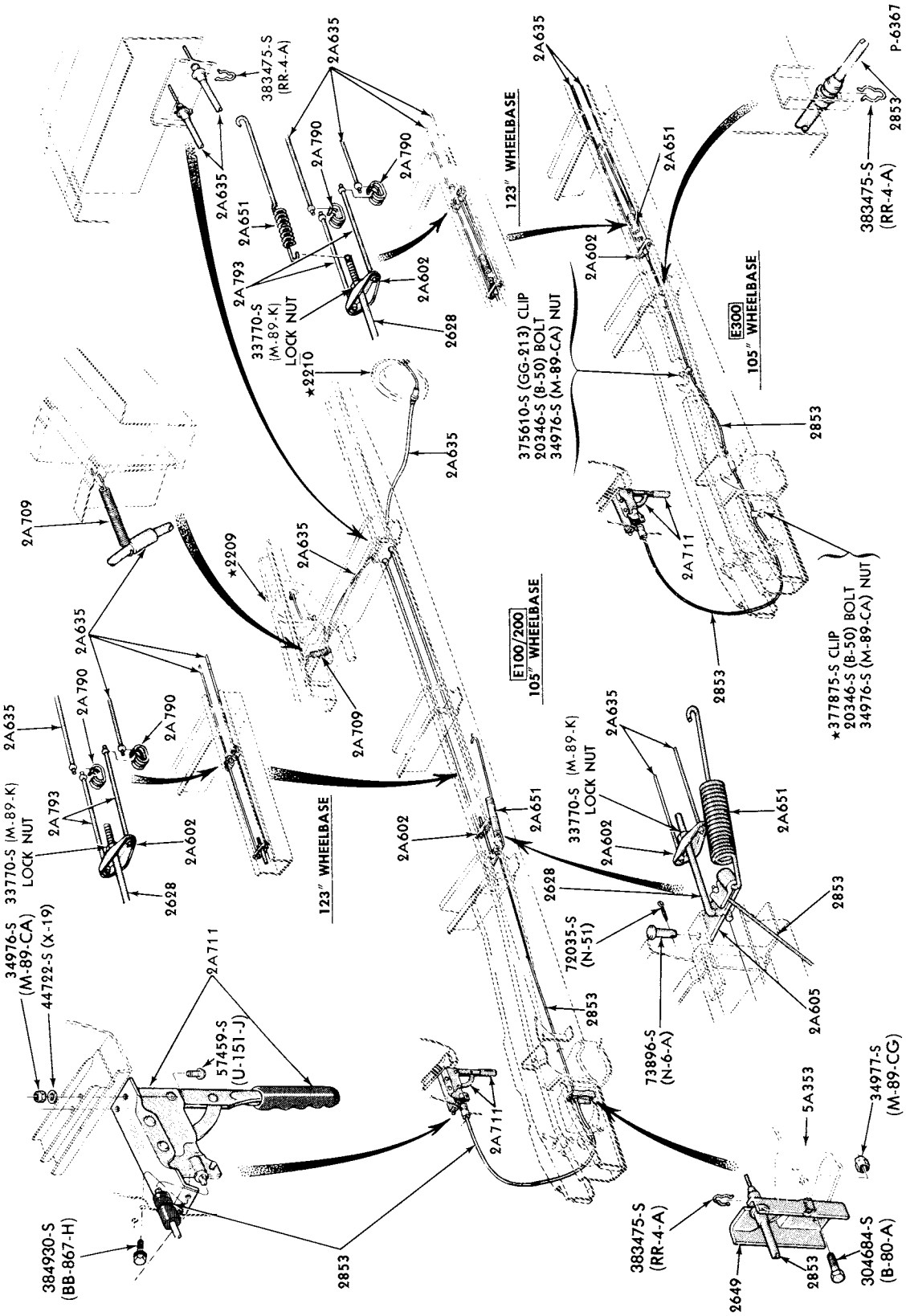

PARKING BRAKE SYSTEM (CABLE OPERATED REAR BRAKES)
1973/74 E100/300

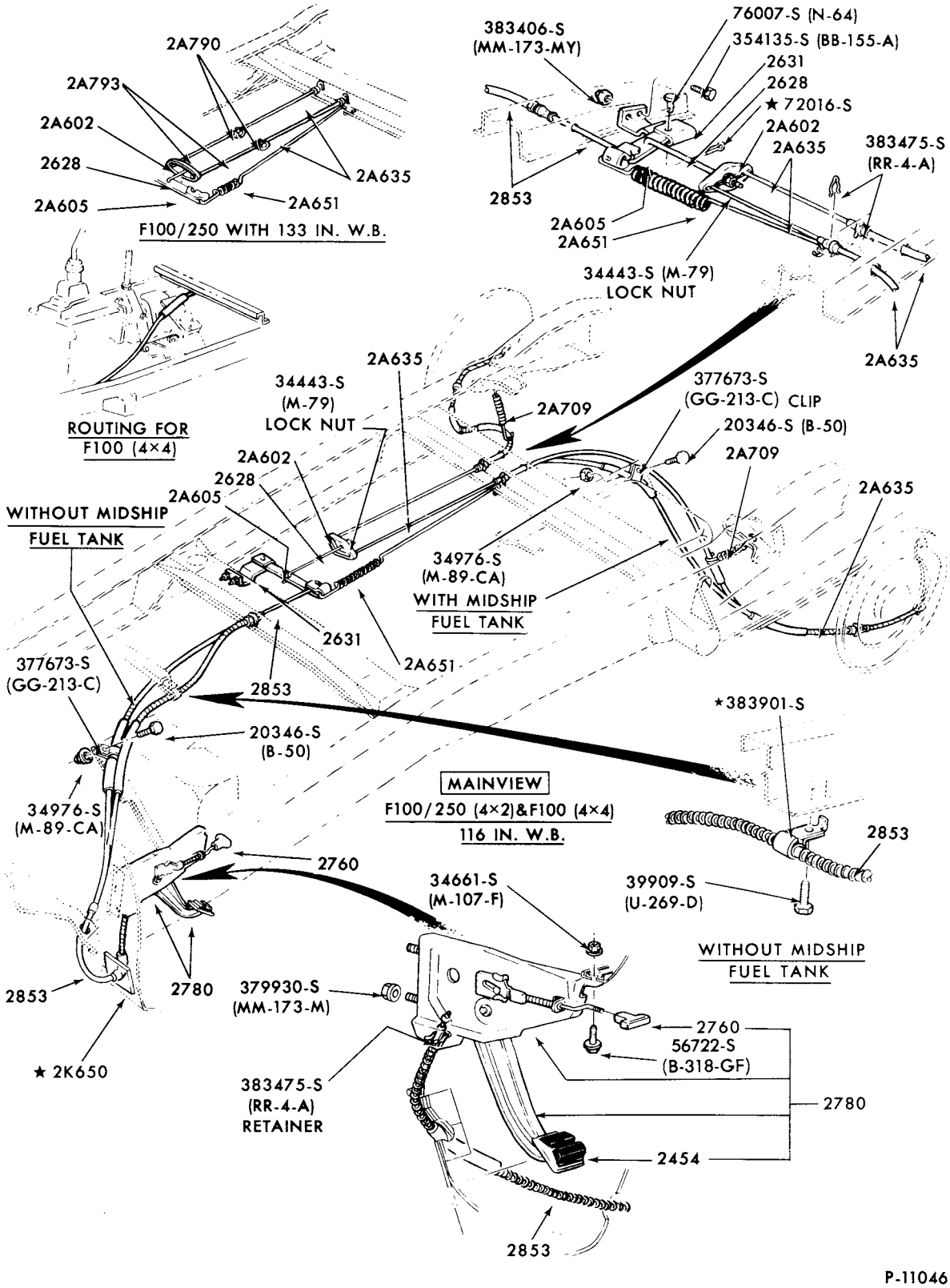

PARKING BRAKE SYSTEM (CABLE OPERATED REAR BRAKES)
1973/ F100/150--REG. CAB with 116" and 133" W/B
1973/ F250--2/W/D REG. CAB with STD. BRAKES and 133" W/B

COPYRIGHT © 1979 FORD MOTOR COMPANY DEARBORN, MICHIGAN

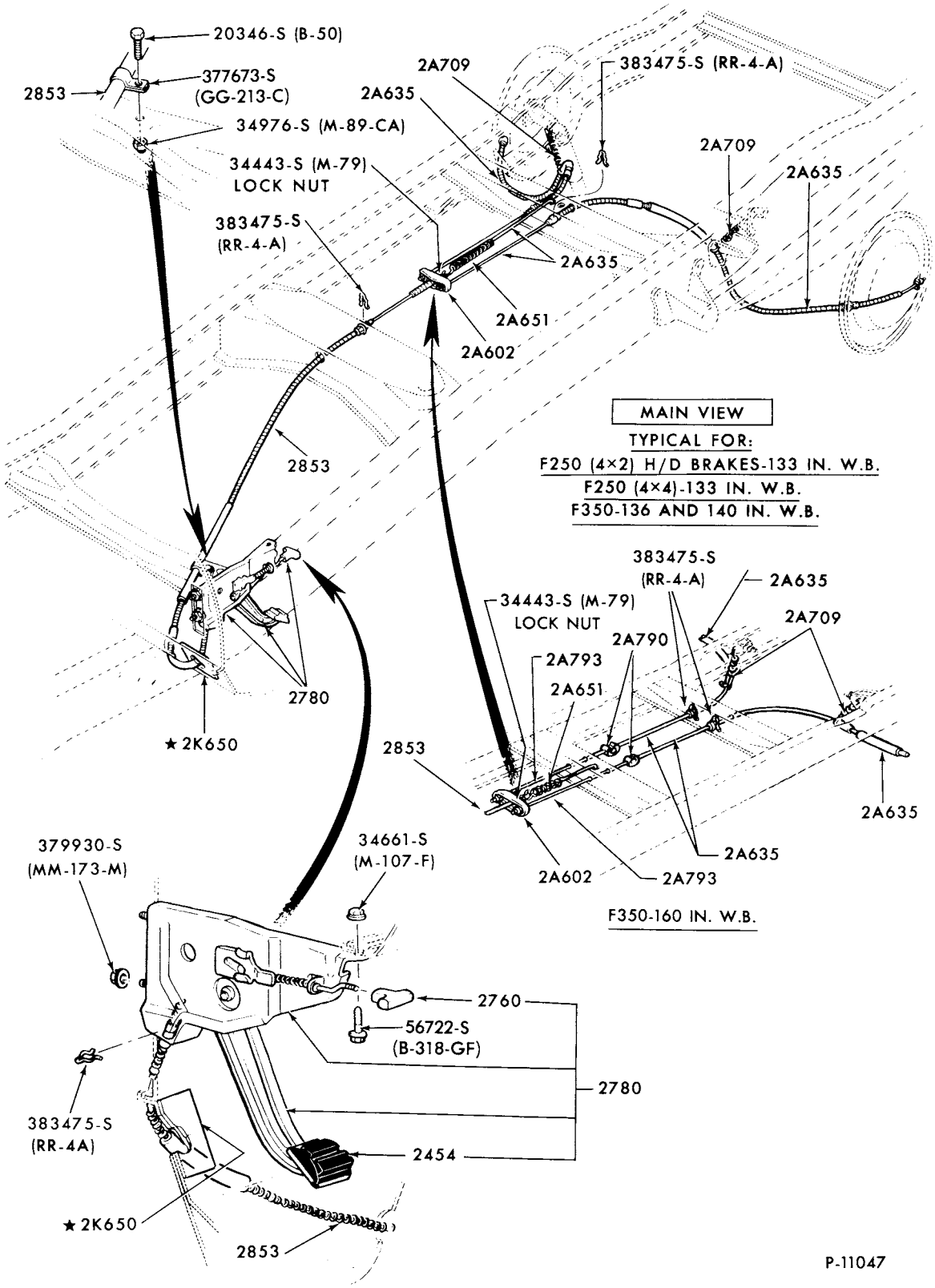

PARKING BRAKE SYSTEM (CABLE OPERATED REAR BRAKES)
1973/77 F250--2/W/D REG. CAB with H/D BRAKES and 133" W/B
1973/77 F250--4/W/D and F350 REG. CAB with 133", 136", 140" and 160" W/B

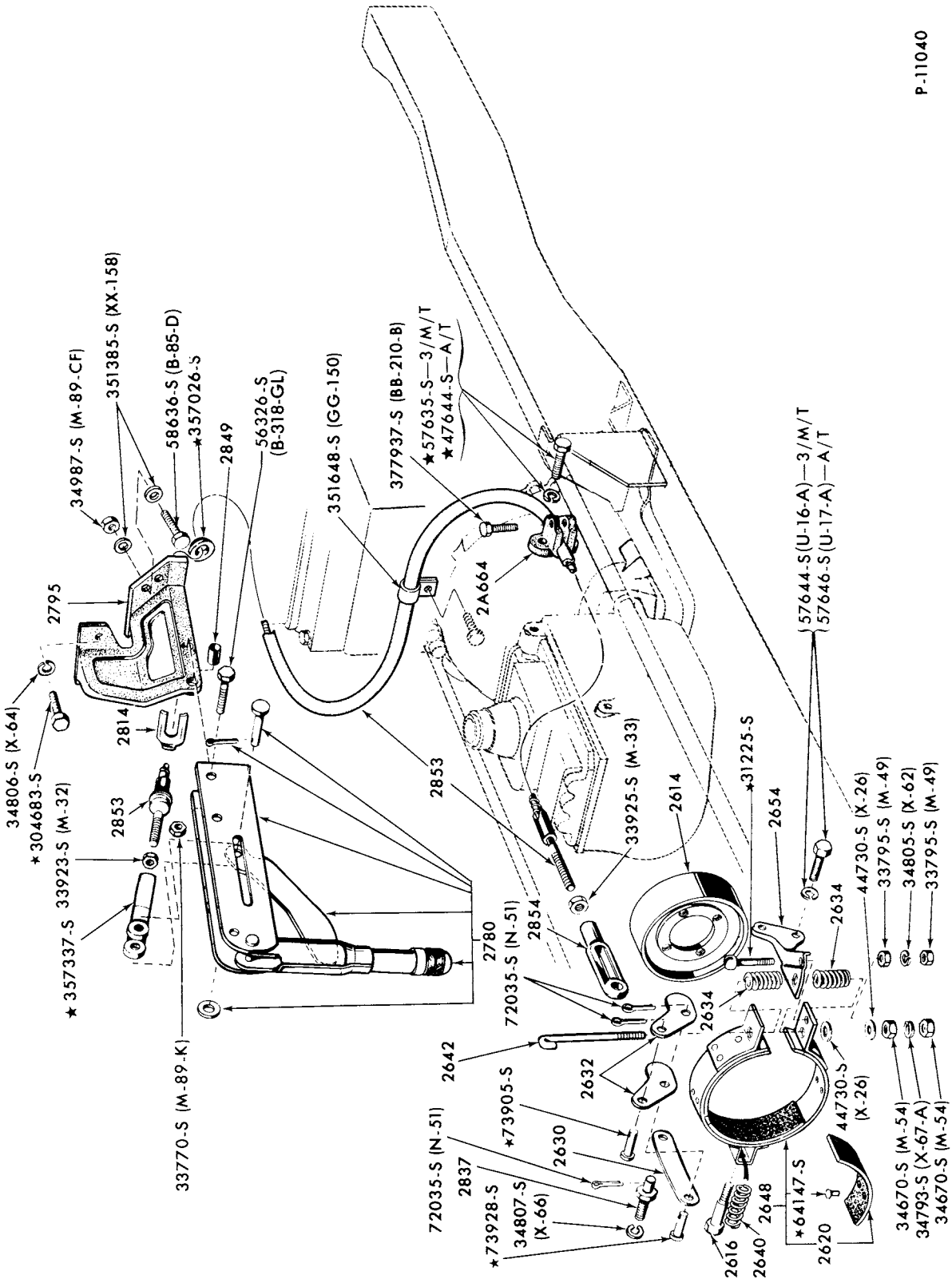

PARKING BRAKE SYSTEM (TRANS. EXTERNAL BAND TYPE)
1973/76 P350/400--3/M/T and A/T
1973/77 P500

COPYRIGHT © 1979 FORD MOTOR COMPANY DEARBORN, MICHIGAN

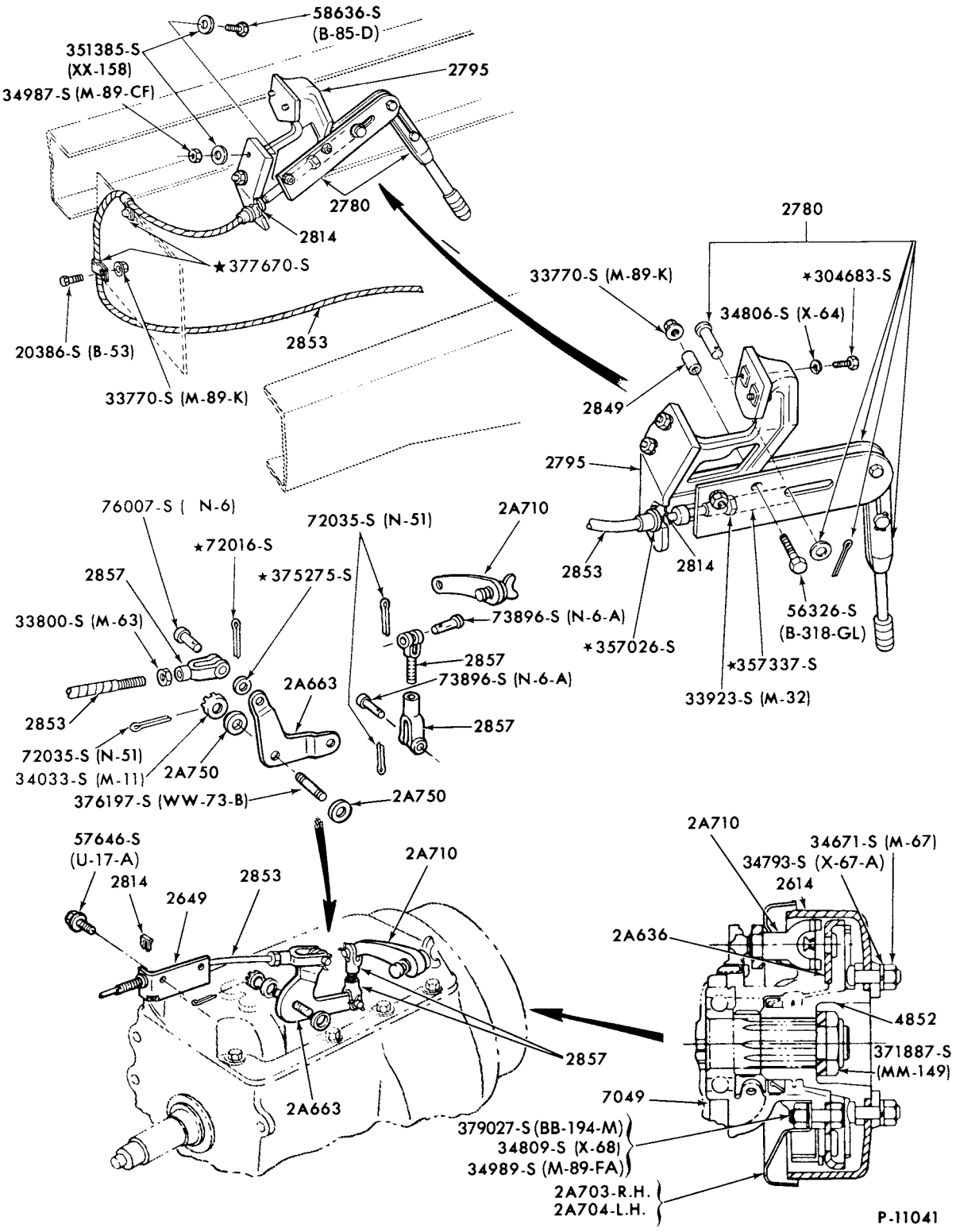

PARKING BRAKE SYSTEM (TRANS. INTERNAL SHOE TYPE)
1973/76 P350/400--4/M/T
1973/77 P500

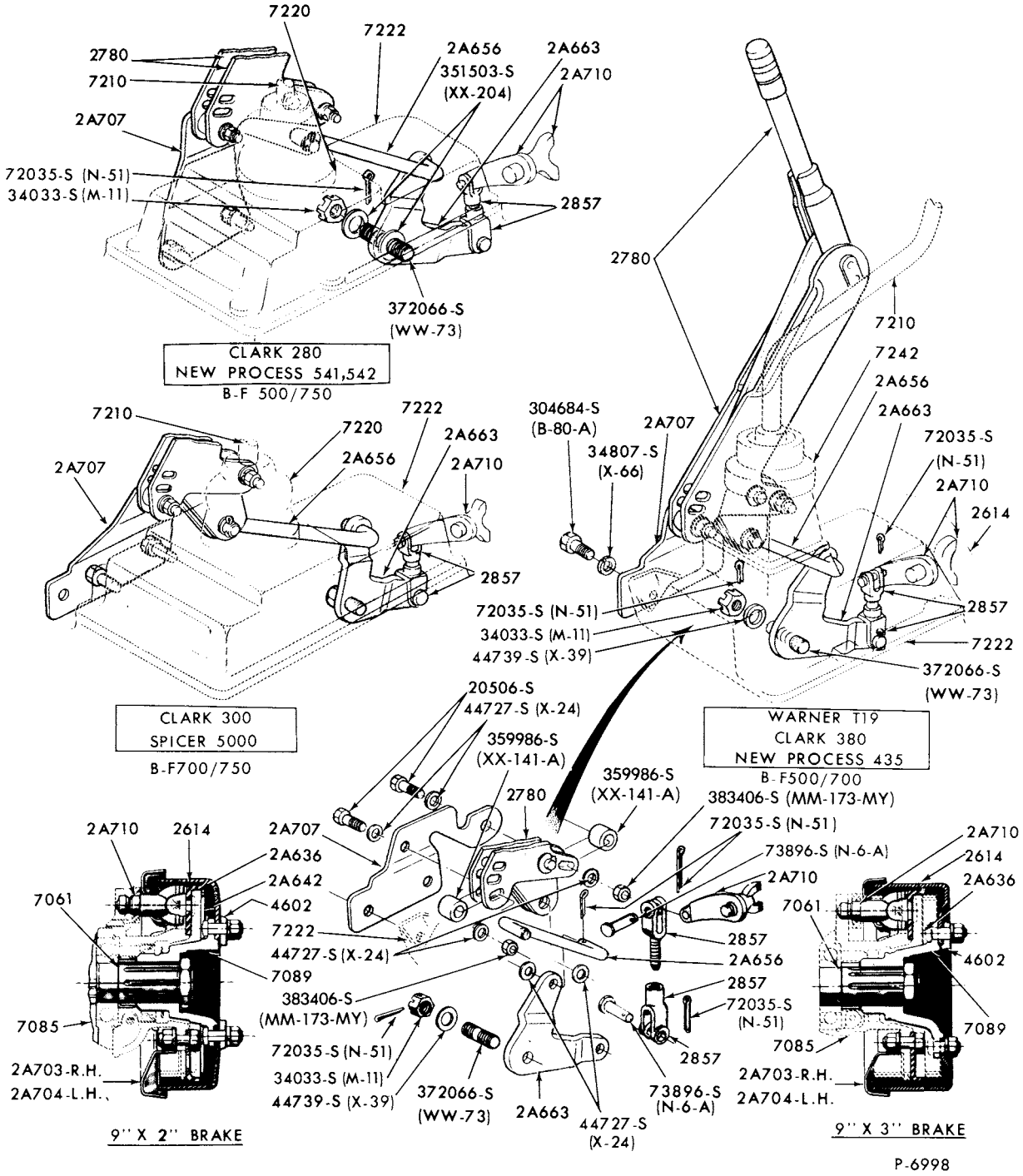

PARKING BRAKE SYSTEM (TRANS. INTERNAL SHOE TYPE w/ORSCHELN LEVER)
1973 B-F500 (84) w/MANUAL TRANS.-"BEFORE SER. S00,001"

COPYRIGHT © 1979 — FORD MOTOR COMPANY DEARBORN, MICHIGAN

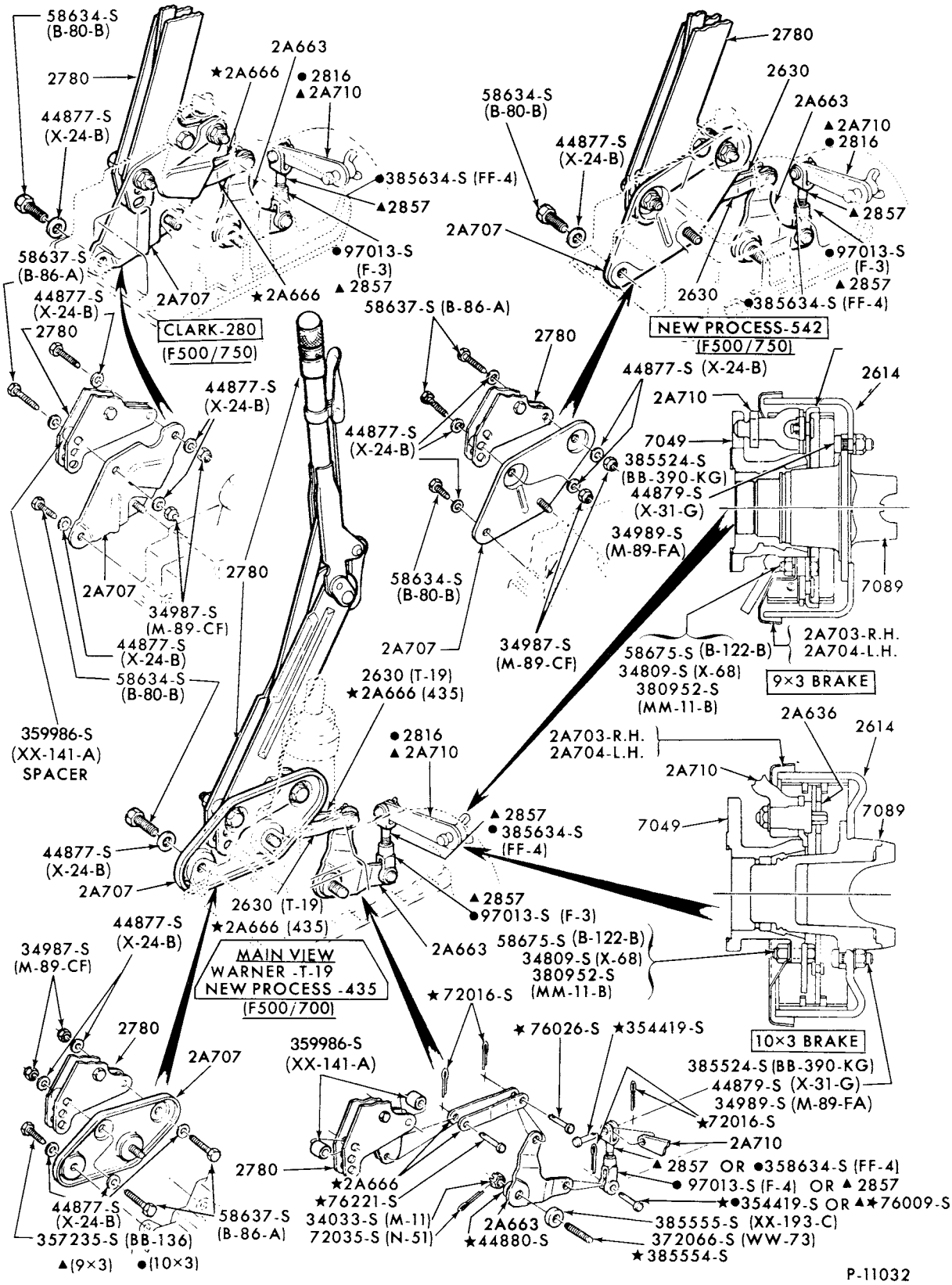

PARKING BRAKE SYSTEM
(TRANS. INTERNAL SHOE TYPE w/ORSCHELN LEVER)--9" x 3" and 10" x 3"
1973/77 F500 (81) w/MANUAL TRANS.-"FROM SER. S00,001"

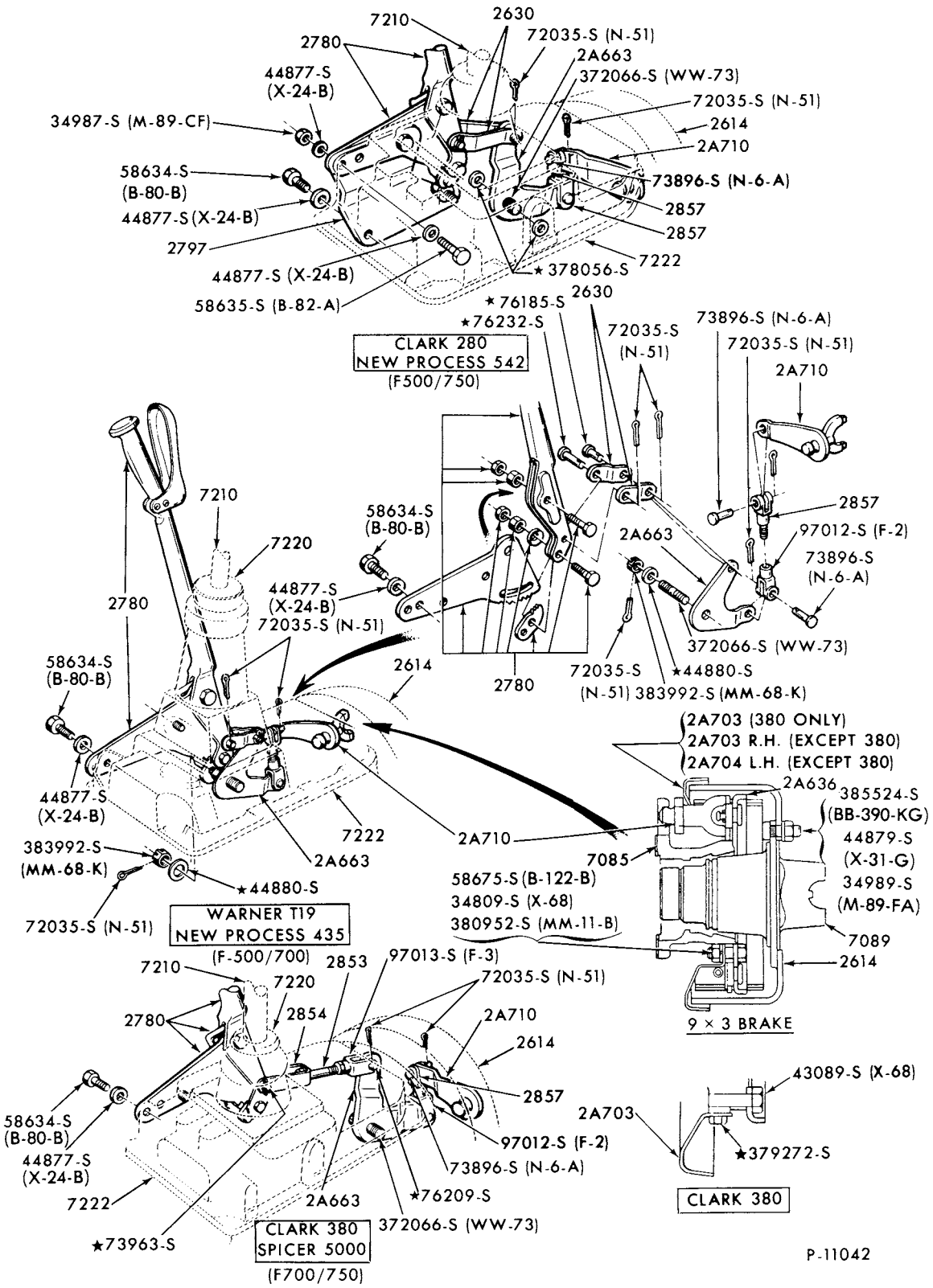

PARKING BRAKE SYSTEM (TRANS. INTERNAL SHOE TYPE w/STANDARD LEVER)--9" x 3"
1973/77 F500 (81) w/MANUAL TRANS.-"FROM SER. S00,001"

COPYRIGHT © 1979 FORD MOTOR COMPANY, DEARBORN, MICHIGAN

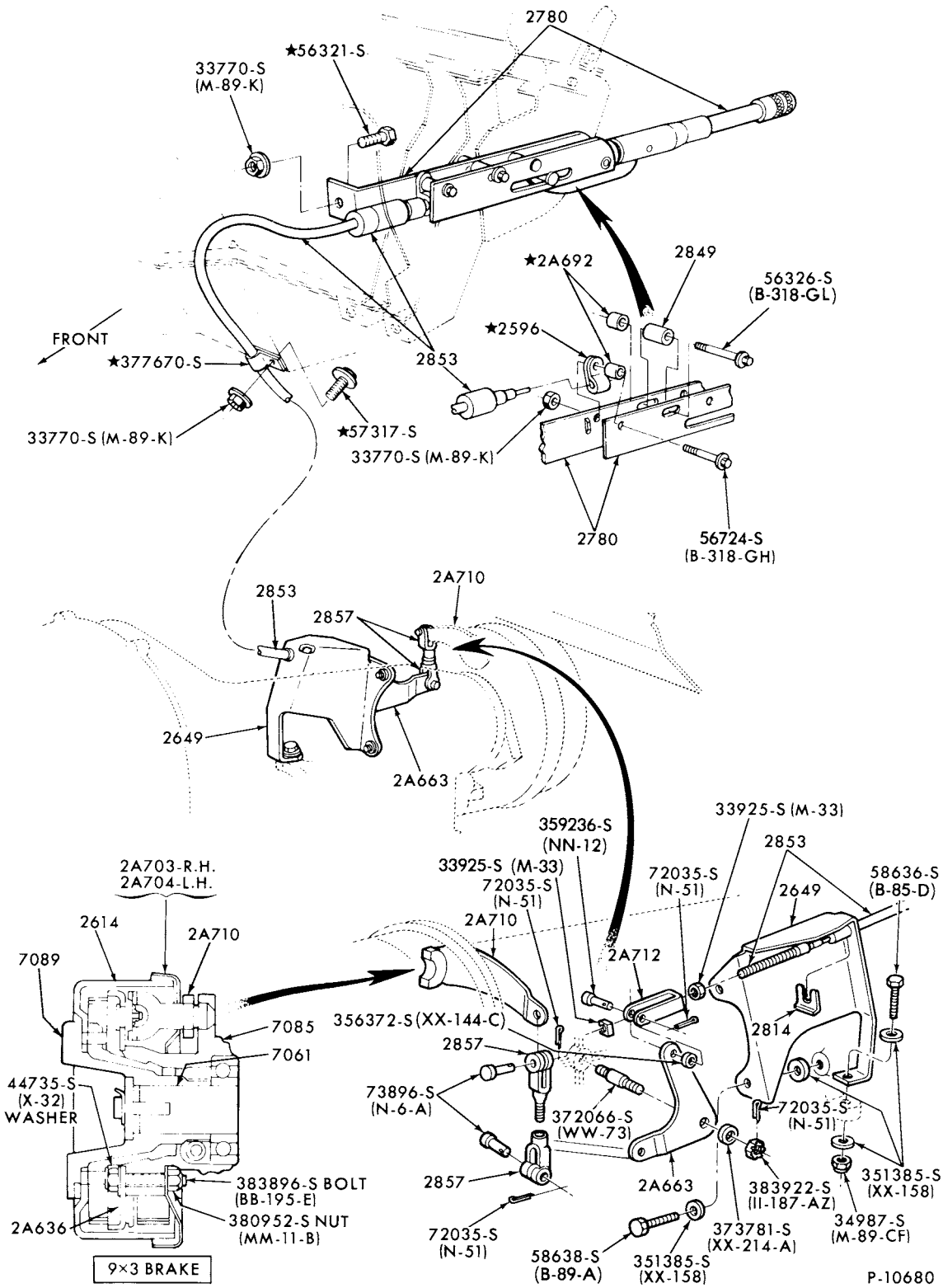

PARKING BRAKE SYSTEM (TRANS. INTERNAL SHOE TYPE)--9" x 3"
1973 F500 (84)--FORD C6 TRANS.-"BEFORE SER. S00,001"

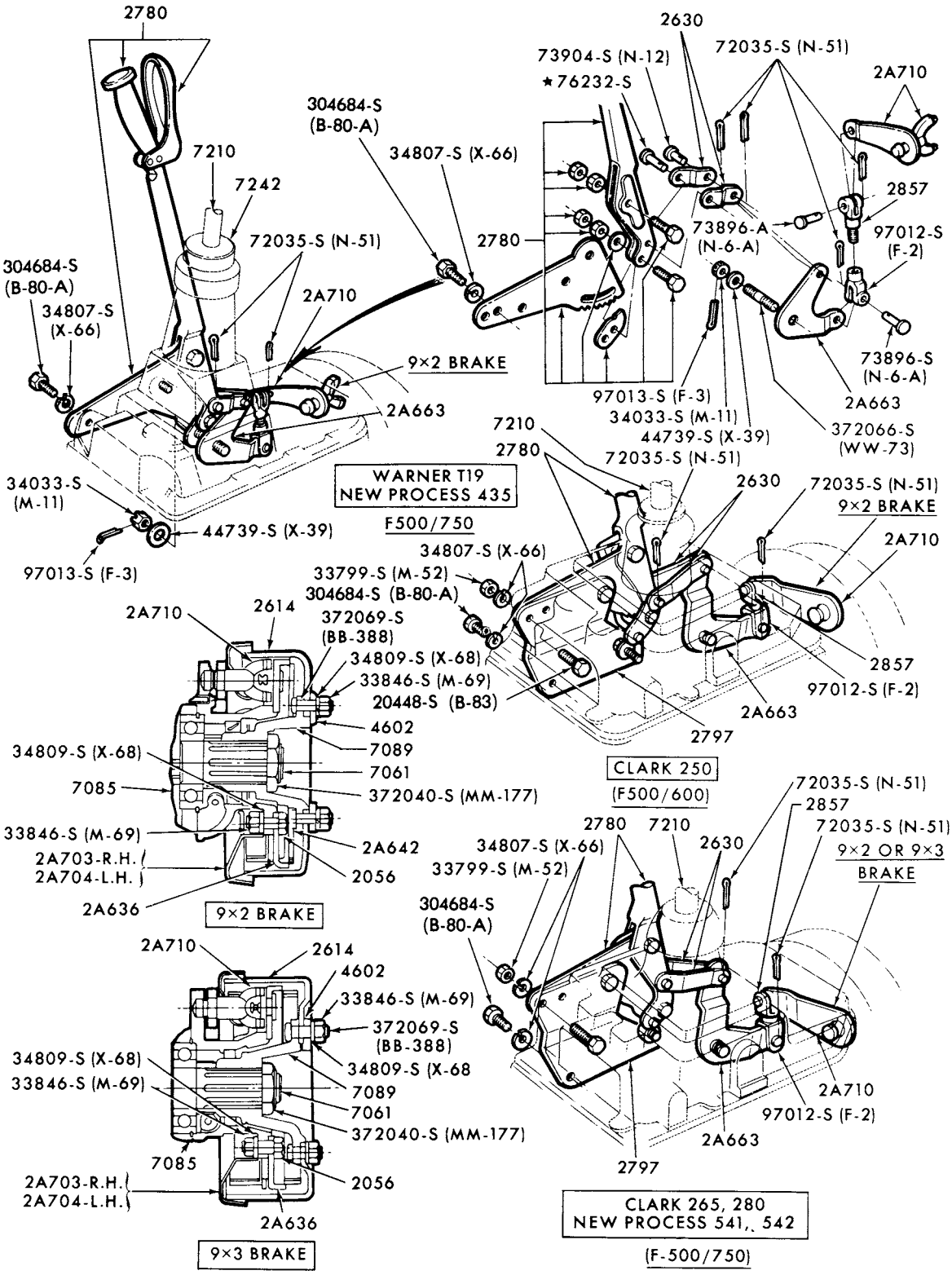

PARKING BRAKE SYSTEM (TRANS. INTERNAL SHOE TYPE w/STANDARD LEVER)
1973 F500 (81) w/MANUAL TRANS.-BEFORE SER. S00,001"

COPYRIGHT © 1979 FORD MOTOR COMPANY
DEARBORN, MICHIGAN

1973/79 TRUCK SERIES 100/500

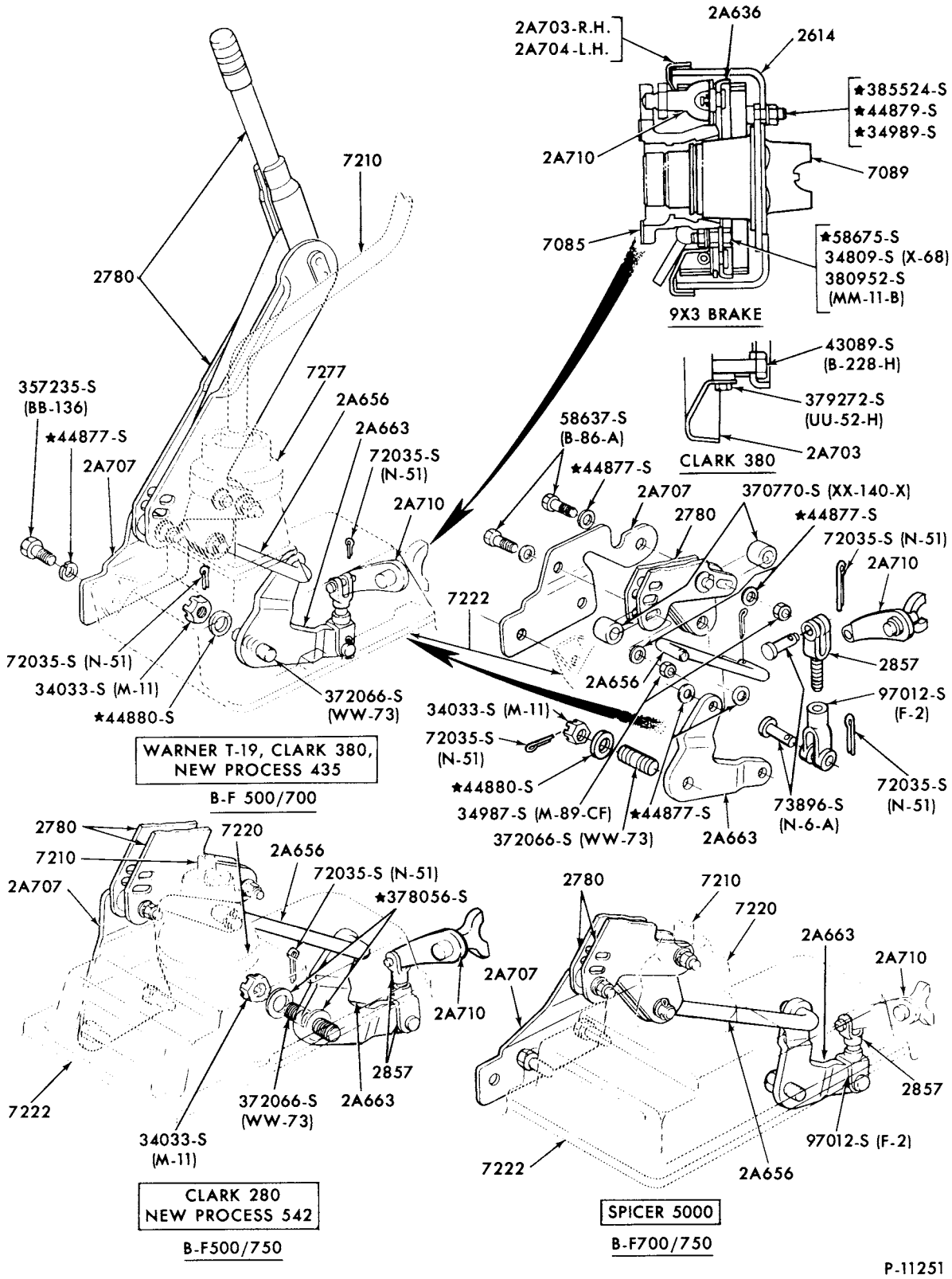

PARKING BRAKE SYSTEM (TRANS. INTERNAL SHOE TYPE w/ORSCHELN LEVER)
1973/77 B-F500 (84) w/MANUAL TRANS.-"FROM SER. S00,001"

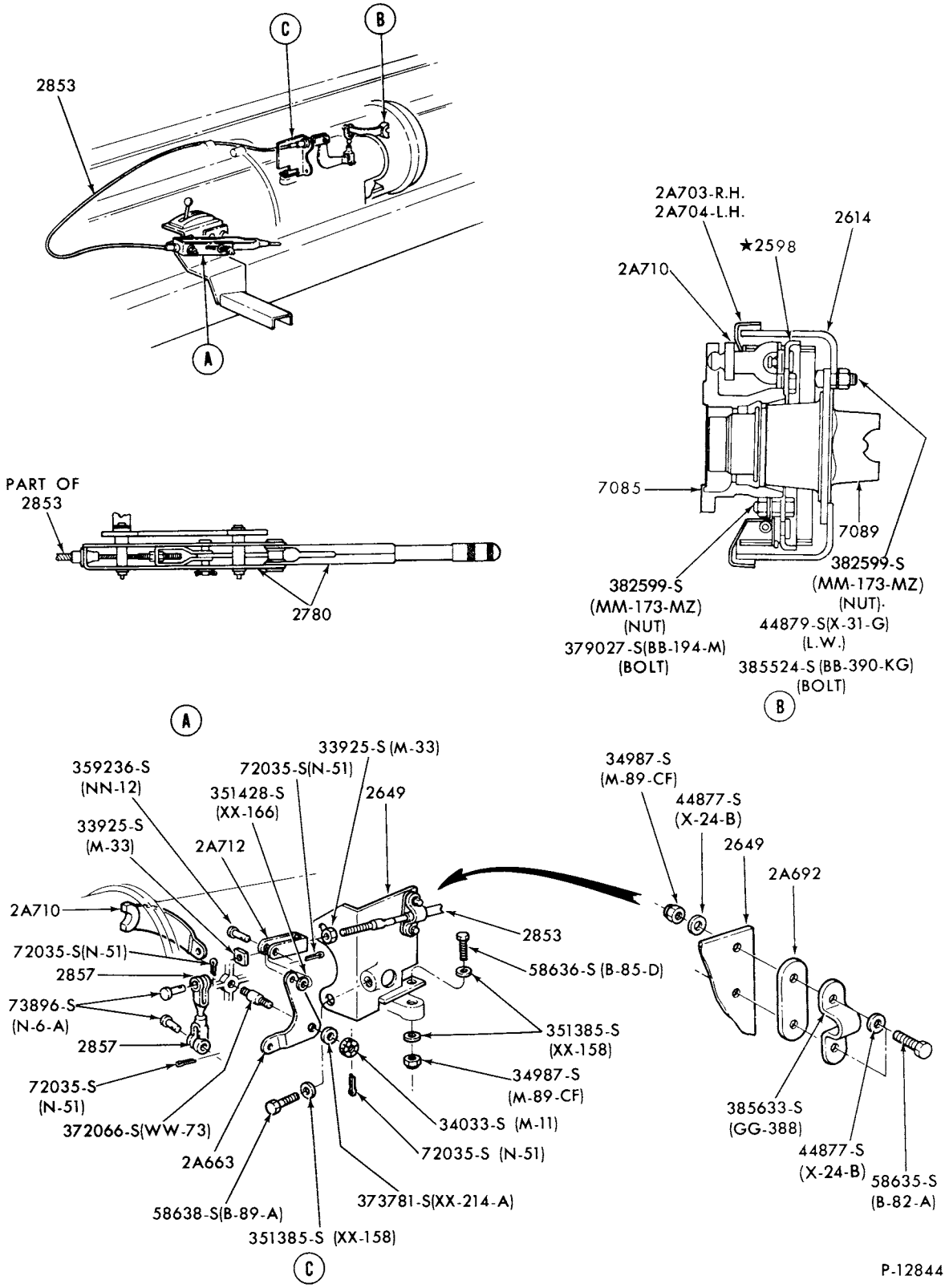

PARKING BRAKE SYSTEM (TRANS. INTERNAL SHOE TYPE w/ORSCHELN LEVER)
1973/76 M450/500 with FORD C6 TRANS.

COPYRIGHT © 1979 FORD MOTOR COMPANY - DEARBORN, MICHIGAN

1973/79 TRUCK SERIES 100/500

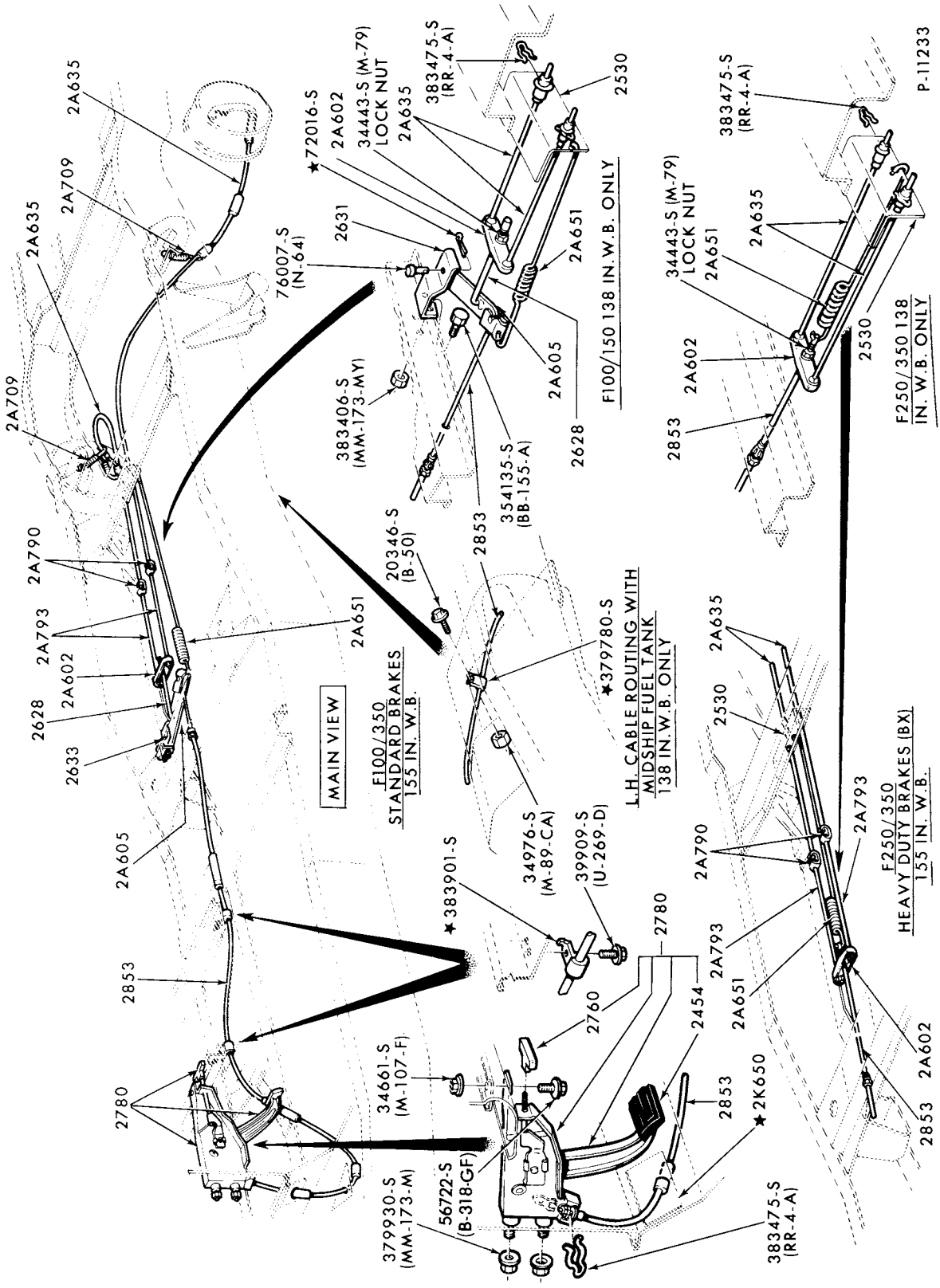

PARKING BRAKE SYSTEM (CABLE OPERATED REAR BRAKES)
1974/77 F100/350--SUPER CAB with 138" and 155" W/B

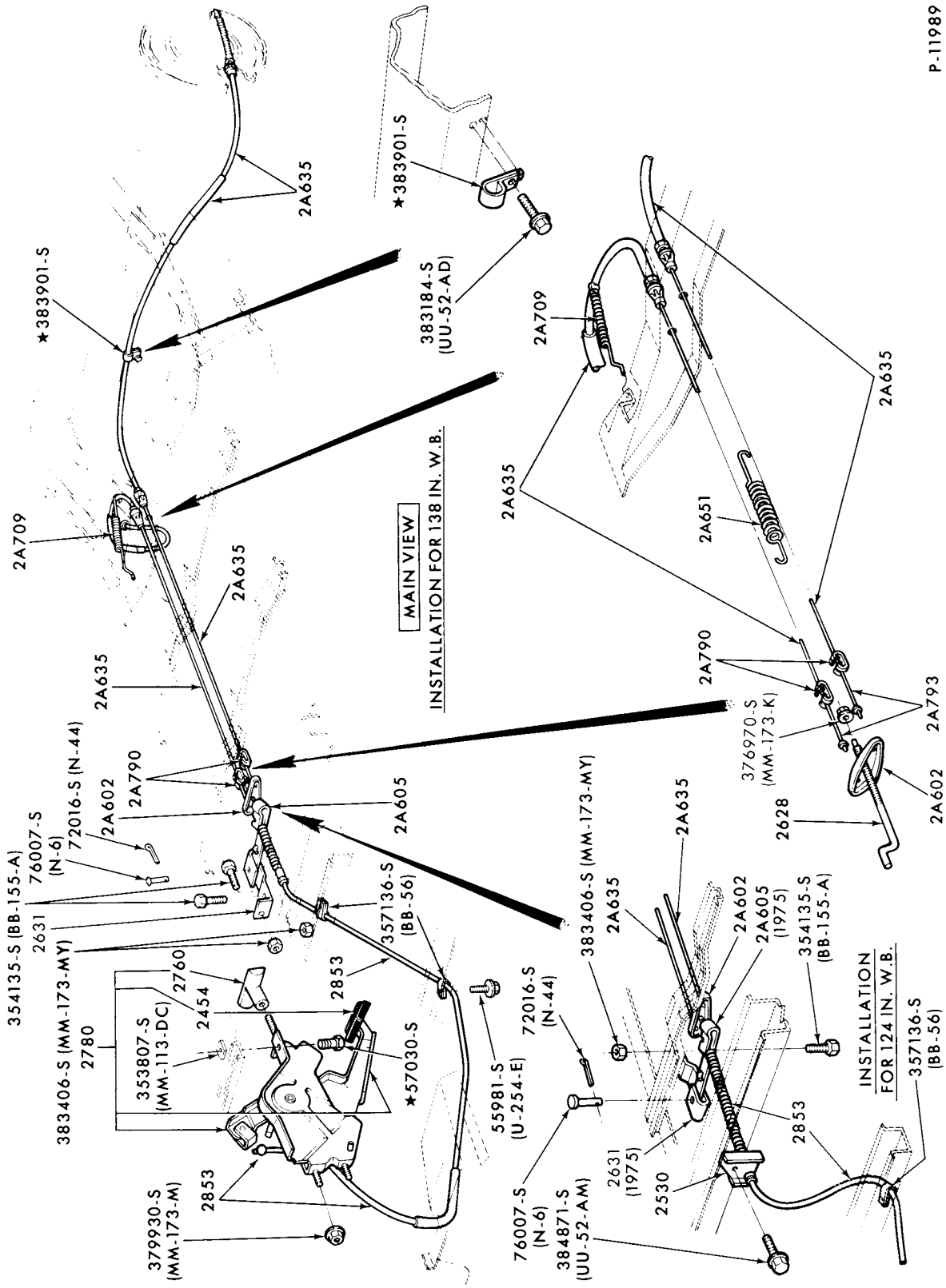

PARKING BRAKE SYSTEM (CABLE OPERATED REAR BRAKES)
1975/77 E100/150--124" and 138" W/B

COPYRIGHT © 1979 FORD MOTOR COMPANY DEARBORN, MICHIGAN

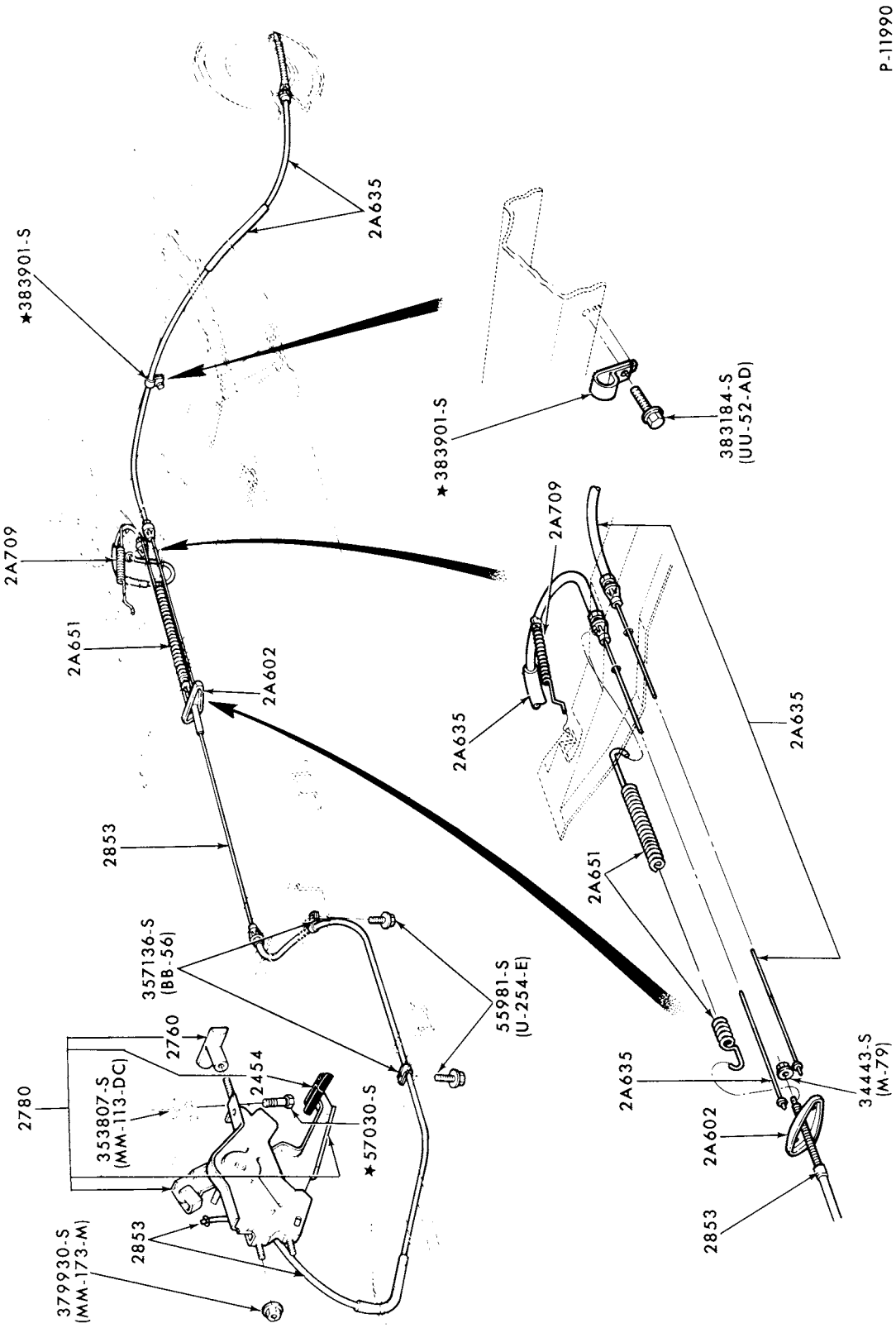

PARKING BRAKE SYSTEM (CABLE OPERATED REAR BRAKES)
1975/77 E250/350--138" and 158" W/B

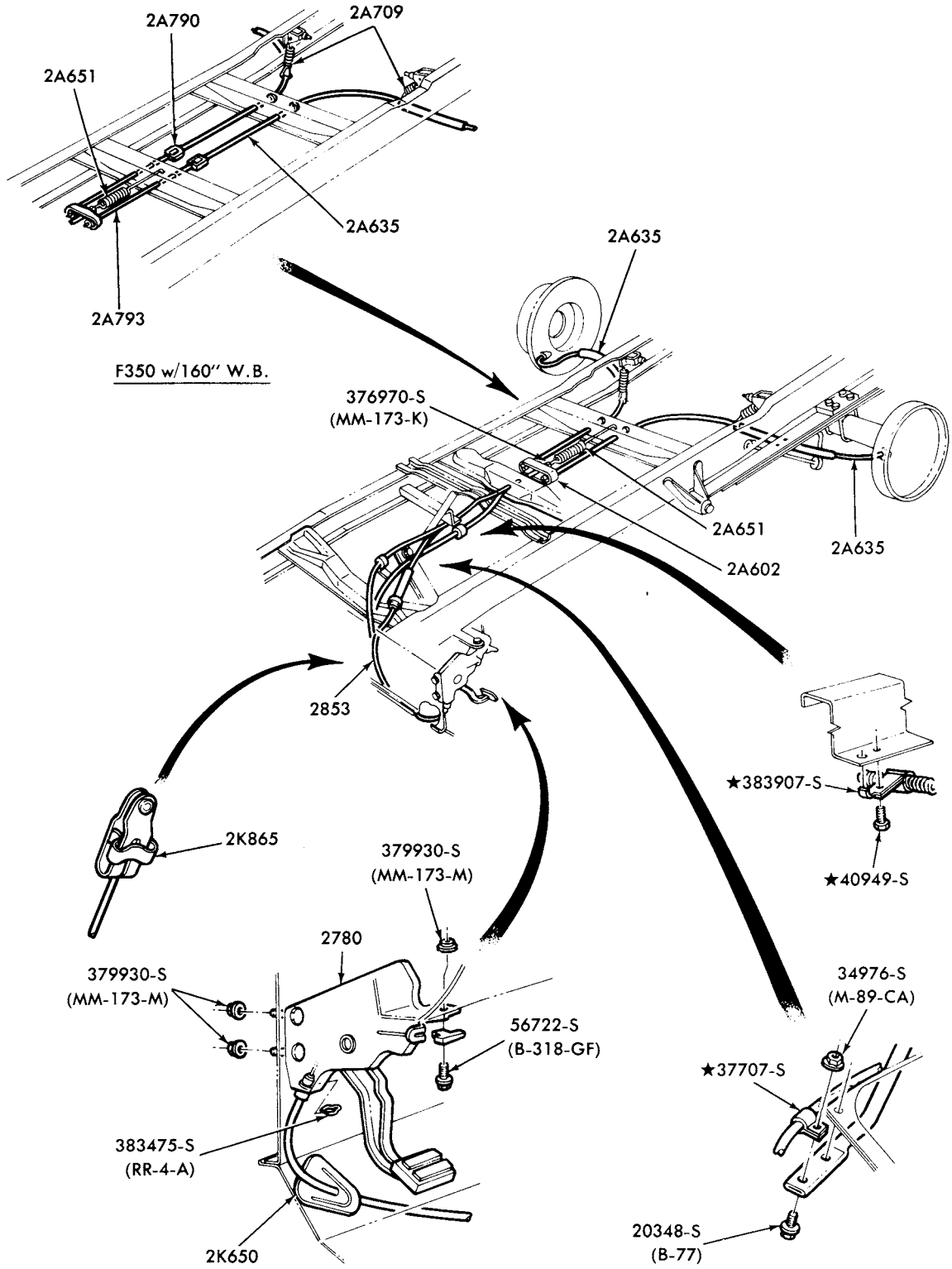

P-14579

PARKING BRAKE SYSTEM (CABLE OPERATED REAR BRAKES)
1978/ F250/350--2/W/D and 1978/ F250/350--4/W/D

COPYRIGHT © 1979 FORD MOTOR COMPANY, DEARBORN, MICHIGAN

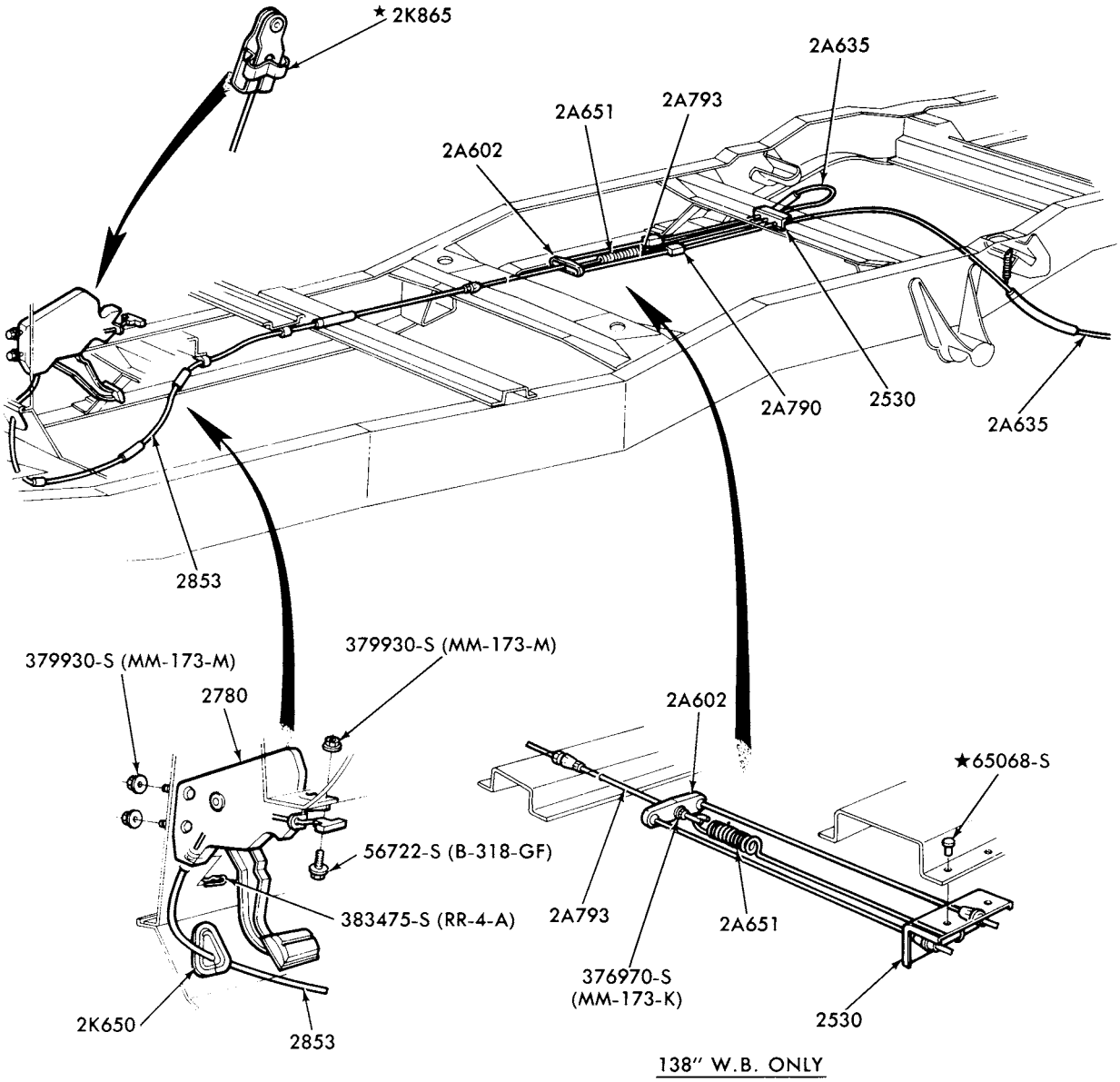

P-14580

PARKING BRAKE SYSTEM (CABLE OPERATED REAR BRAKES)
1978/ F100/350--2/W/D SUPER CAB with 138" and 155" W/B
1978/ F150/350--4/W/D SUPER CAB with 155" W/B

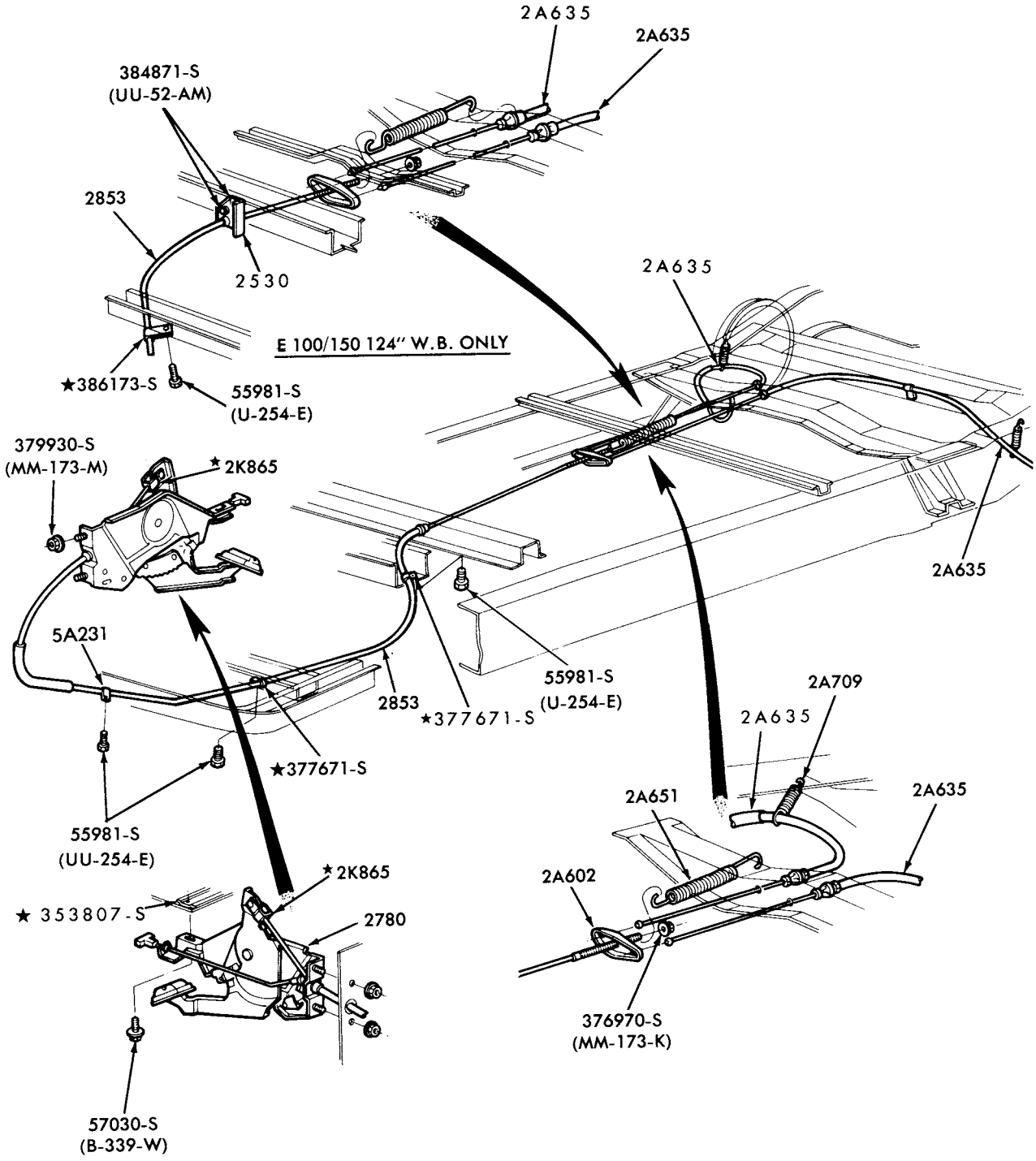

P-14581

PARKING BRAKE SYSTEM (CABLE OPERATED REAR BRAKES)
1978/ E100/350--124", 138" and 158" W/B

COPYRIGHT © 1979 FORD MOTOR COMPANY DEARBORN, MICHIGAN

INDEX

INCLUDED IN THIS INDEX ARE THE FOLLOWING MAJOR GROUPS IN THE ORDER SHOWN BELOW

FRONT AXLE and LINKAGE
STEERING:
- COLUMN
- MANUAL SYSTEM
- MANUAL GEAR DETAILS
- POWER SYSTEM
- POWER SYSTEM COMPONENT DETAILS
- WHEELS

YEAR 19___	TITLE	MODEL	SECTION	PAGE	ILLUS. NO.
	B SERIES				
73/77	5M	B500	30	1	P-10059
	STEERING				
	COLUMN				
73/77		B500	35	1	P-5988
	MANUAL				
73/77	Gear details-typical-Ross 375	B500	35	10	P-8460
	POWER				
73/77	System	B500	36	1	P-6253
73/77	Pump details-Eaton--6 cyl.	B500	36	9	P-9368
	-Eaton--8 cyl.	B500	36	9	P-9369
73/77	Reservoir details-Eaton	B500	36	8	P-9437
73/77	Steering gear details-Ross HF-54	B500	35	7	P-5527
	WHEEL				
73/77		B500	35	8	P-5802
	E SERIES				
	FRONT AXLE and LINKAGE				
73/74	2.5M thru 3.6M (Twin "I" beam)	E100/300	30	2	P-10160-A
			30	3	P-10160-B
75/		E100/350	30	10	P-12047-A
			30	11	P-12047-B
	STEERING				
	COLUMN				
73/74		E100/300	35	2	P-6451
75/77		E100/350	35	19	P-11630
78/	With A/T	E100/350	35	26	P-14237
78/	With A/T and tilt wheel	E100/350	35	27	P-14238
78/	With 3/M/T	E100/350	35	28	P-14239
78/	With 4/M/T	E100/350	35	29	P-14240
	MANUAL				
73/74	Gear details	E100/300	35	2	P-6451
75/	Gear details	E100/350	35	22	P-12342
	POWER				
73/74	System	E100/300	36	2	P-8058-A
73/74	Linkage installation	E100/300	36	3	P-8058-B
73/74	Control valve details-typical	E100/300	36	6	P-8175
73/74	Cylinder details-typical	E100/300	36	5	P-4180
73/74	Pump installation	E100/300	36	2	P-8058-A
75/	Pump installation--6 cyl. (1975/76)	E100/350	36	16	P-11672
	--6 cyl. (1977/)	E100/350	36	20	P-13325
	--8 cyl. (1975/76)	E100/350	36	17	P-11624
77	Pump installation--8 cyl.	E100/350	36	23	P-14254

COPYRIGHT © 1979 - FORD MOTOR COMPANY —DEARBORN, MICHIGAN

INDEX

YEAR 19__	TITLE	MODEL	SECTION	PAGE	ILLUS. NO.
	E SERIES				
	POWER - cont'd.				
78/	Pump installation--8 cyl.	E100/350	36	24	P-14257
73/74	Pump details	E100/300	36	7	P-5615
75/	Pump details	E100/350	36	18	P-8816
73/74	Steering gear details	E100/300	35	2	P-6451
75/	Steering gear details	E100/300	35	21	P-12259
	WHEEL				
73/74	Wheel and horn details	E100/300	35	2	P-6451
75/77	Wheel and horn details	E100/300	35	19	P-11630
	F SERIES				
	FRONT AXLE and LINKAGE				
73/	2.5M thru 3.8M (Twin "I" beam)	F100/350--2/W/D	30 30	4 5	P-10321-A P-10321-B
73/75	Front driving axle assy.	F100--4/W/D	30	13	P-10300
76/	Front driving axle - Page A	F100/150--4/W/D	30	15	P-12954
	- Page B	F100/150--4/W/D	30	16	P-12955
73/75	Front driving axle installation and linkage	F100--4/W/D	30	6	P-5123
76/77	Front driving axle installation, linkage and steering shock absorber	F100/150--4/W/D	30	14	P-12741
78/	Front driving axle installation, linkage and steering shock absorber	F150--4/W/D	30	18	P-14977
73	Front driving axle assy. -3.3M (Dana 44-6F)	F250(exc.Crew Cab)--4/W/D	30	7	P-10615
73/	Front driving axle assy.-3.5M (Dana 44-6FHD)	F250/350--4/W/D	30	12	P-10544
73/75	Front driving axle-3.8M (Dana 60-F)	F250/350(Crew Cab)--4/W/D	30	12	P-10544
76/	Front driving axle (Dana 60-F)	F250--4/W/D	30	17	P-13041
73/77	5M	F500	30	1	P-10059
	STEERING				
	COLUMN				
73	With A/T and M/T - column shift	F100/350--2/W/D	35	3	P-10638
74/77	With A/T and M/T - column shift	F100/350--2/W/D	35	15	P-11049
73/75	With 4/M/T - floor shift	F100--4/W/D	35	4	P-10162
76/77	With 4/M/T - floor shift	F100/150--4/W/D	35	24	P-12974
73/77	With 4/M/T - floor shift	F250--4/W/D	35	6	P-10161
73/75	With A/T - column shift	F100/250--4/W/D	35	14	P-10723
76/77	With A/T	F100/250--4/W/D	35	25	P-12975
73/75	Steering shock absorber details	F100--4/W/D	35	4	P-10162
73/77	All	F500	35	1	P-5988
73/77	With 4/M/T - floor shift	F100/350--2/W/D	35	16	P-11050
78/	With A/T and tilt wheel	F150/350--4/W/D	35	30	P-14241
78/	With A/T and tilt wheel	F100/350--2/W/D	35	31	P-14242
78/	With 4/M/T	F150/350--4/W/D	35	32	P-14243
78/	With A/T	F150/350--4/W/D	35	33	P-14244
78/	With 4/M/T	F100/350--2/W/D	35	34	P-14245
78/	With A/T	F100/350--2/W/D	35	35	P-14246
78/	With 3/M/T	F100/350--2/W/D	35	36	P-14247
	MANUAL				
73/	Gear details	F100/350--2/W/D	35	8	P-4608
73/78	Gear details	F100/150--4/W/D	35	11	P-9981
73/77	Gear details	F250/350-4/W/D	35	10	P-8460
73/77	Gear details-typical-Ross 375	F500	35	10	P-8460

INDEX

YEAR 19__	TITLE	MODEL	SECTION	PAGE	ILLUS. NO.
	F SERIES				
	POWER				
73/77	Pump installation--6 & 8 cyl.	F100/350--2/W/D	36	4	P-9946
78/	Pump installation--6 & 8 cyl.	F100/350--2/W/D	36	26	P-14585
73/77	Pump details	F100/350--2/W/D	36	7	P-5615
78/	Pump details-Ford C-II design	F100/350	36	25	P-14265
73/74	Steering gear details (spool valve type-SPA-AB, AJ)	F100/350--2/W/D	35	9	P-6792
74/	Steering gear details (rotary valve type)	F100/350	35	20	P-12201
73/75	Pump installation--8 cyl. 360	F100--4/W/D	36	10	P-10630
76/77	Pump installation--6 cyl. 300 and 8 cyl. 360	F100/150--4/W/D	36	19	P-12738
78/	Pump installation--6 and 8 cyl.	F150/350-4/W/D	36	22	P-14586
73/76	Pump installation--8 cyl. 390	F250--4/W/D	36	11	P-10631
77	Pump installation--6 cyl. 300 and 8 cyl. 351M,400	F250--4/W/D	36	21	P-13365
73/	Control valve details - Garrison type	F100/150--4/W/D	36	12	P-10647
73/74	"Before Ser. T80,001"	F250--4/W/D	36	12	P-10647
74/	Control valve details - Bendix type "From Ser. T80,001"	F250-4/W/D	36	15	P-11988
73/	Cylinder details	F100/250--4/W/D	36	5	P-10649
73/77	Pump details	F100/350--4/W/D	36	7	P-5615
73/	Steering gear details	F100--2/W/D	35	11	P-9981
73/77	Steering gear details - Ross 375	F250--4/W/D	35	10	P-8460
77/	Steering gear details - Ford gear	F150/350--4/W/D	35	20	P-12201
73/77	System	F500	36	1	P-6253
73/77	Pump details - Eaton--6 cyl.	F500	36	9	P-9368
	- Eaton--8 cyl.	F500	36	9	P-9369
73/77	Reservoir details-Eaton	F500	36	8	P-9437
73/77	Steering gear details-Ross HF-54	F500	35	7	P-5527
	WHEEL				
73/		F100/350	35	10	P-11669
73/77		F500	35	8	P-5802
	M SERIES				
	Refer to "P" Series for illustrations not listed below				
	FRONT AXLE and LINKAGE				
73/76	5M	M450/500	30	1	P-10059
	STEERING				
	COLUMN				
73/76	With fixed wheel	M450/500	35	18	P-11554
74/76	With tilt wheel	M450/500	35	23	P-12386
	POWER				
73/76	Pump details	M450/500	36	9	P-9368
73/76	Steering gear installation	M450/500	35	17	P-11544
73/76	Steering gear details - Ross HF-54	M450/500	35	7	P-5527
73/76	Pump installation--8 cyl. 360,390	M450/500	36	13	P-11543
	--8 cyl. 460	M450/500	36	14	P-11545
	WHEEL				
73/76	Wheel and horn mechanism	M450/500	35	18	P-11554
	P SERIES				
	FRONT AXLE and LINKAGE				
73/77	3.8M	P350/400	30	8	P-10066
73/77	4.7M	P500	30	9	P-10065
	STEERING				
	COLUMN				
73/77	With 3/M/T	P350/500	35	13	P-9968
73/77	With 4/M/T	P350/500	35	5	P-9966
73/77	With A/T	P350/500	35	12	P-9969
	MANUAL				
73/77	Gear details	P350/500	35	5	P-9966
	WHEEL				
73/77	Wheel and horn mechanism	P350/500	35	5	P-9966

COPYRIGHT © 1979 FORD MOTOR COMPANY —DEARBORN, MICHIGAN

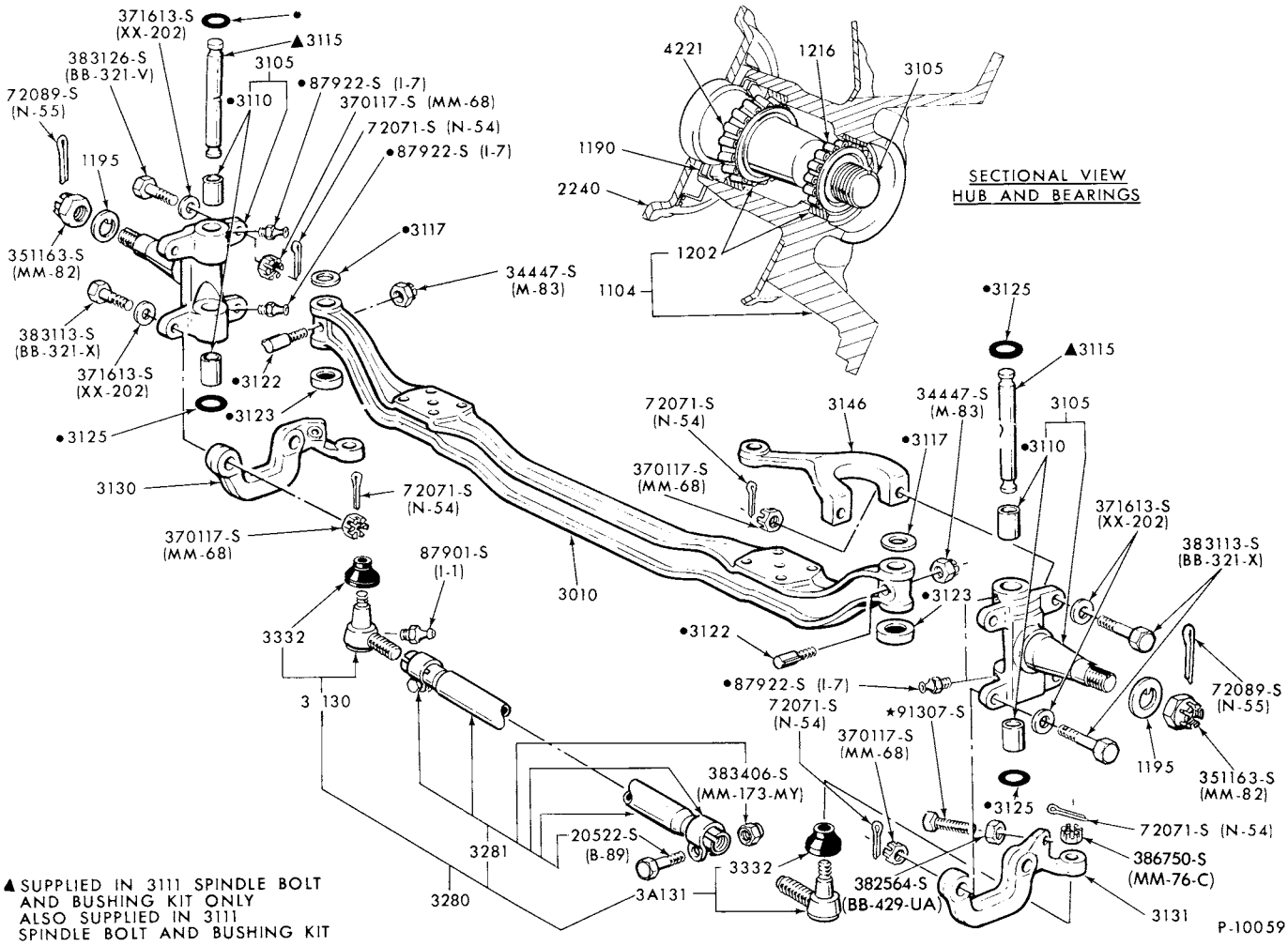

▲ SUPPLIED IN 3111 SPINDLE BOLT AND BUSHING KIT ONLY
ALSO SUPPLIED IN 3111 SPINDLE BOLT AND BUSHING KIT

FRONT AXLE and RELATED PARTS (5M)
1973/77 B-F500 and 1973/76 M450/500

COPYRIGHT © 1979 FORD MOTOR COMPANY, DEARBORN, MICHIGAN

1973/79 TRUCK SERIES 100/500

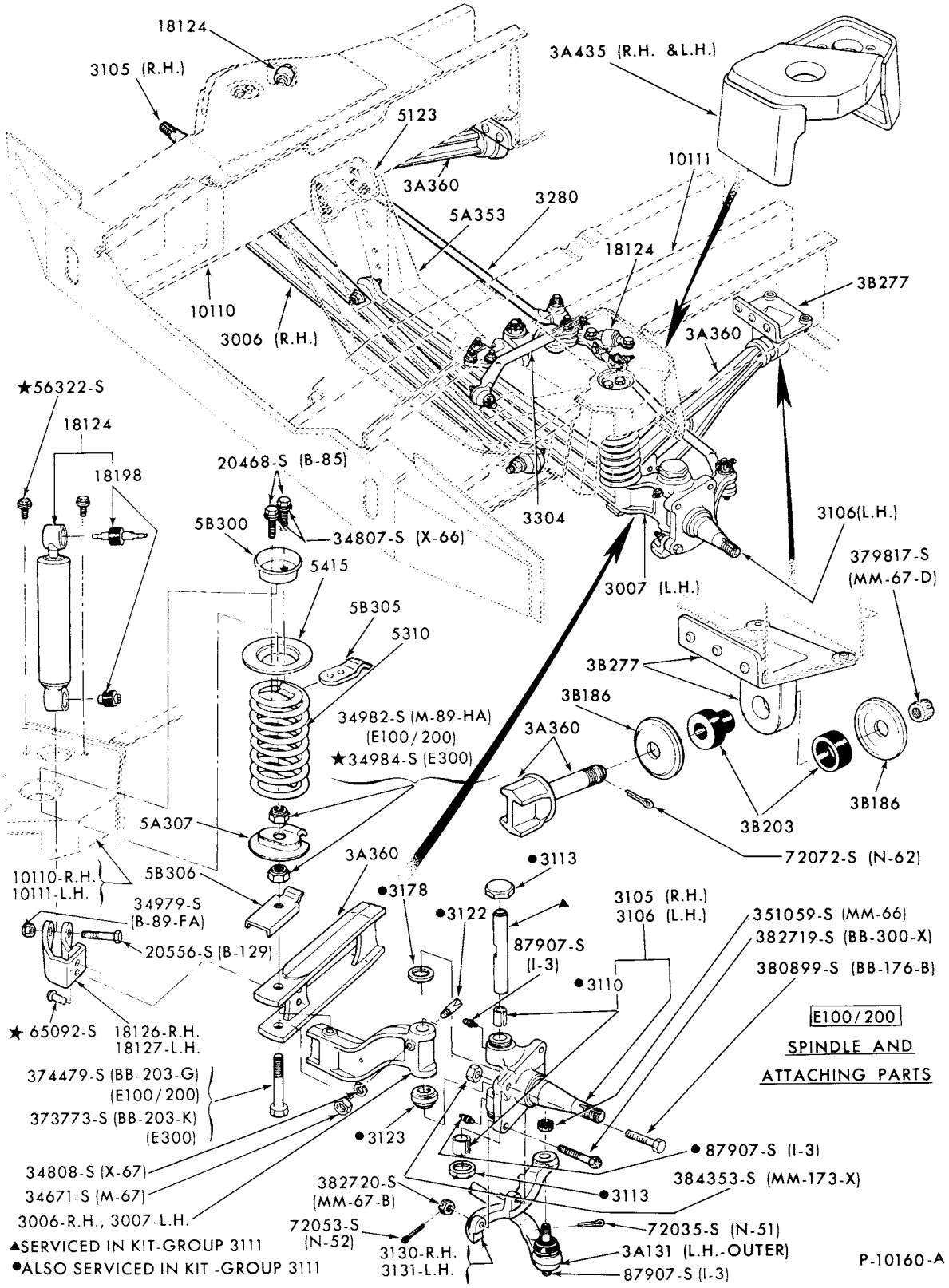

FRONT AXLE, SUSPENSION and RELATED PARTS (TWIN "I"BEAM-2.5M THRU 3.6M)
1973/74 E100/300

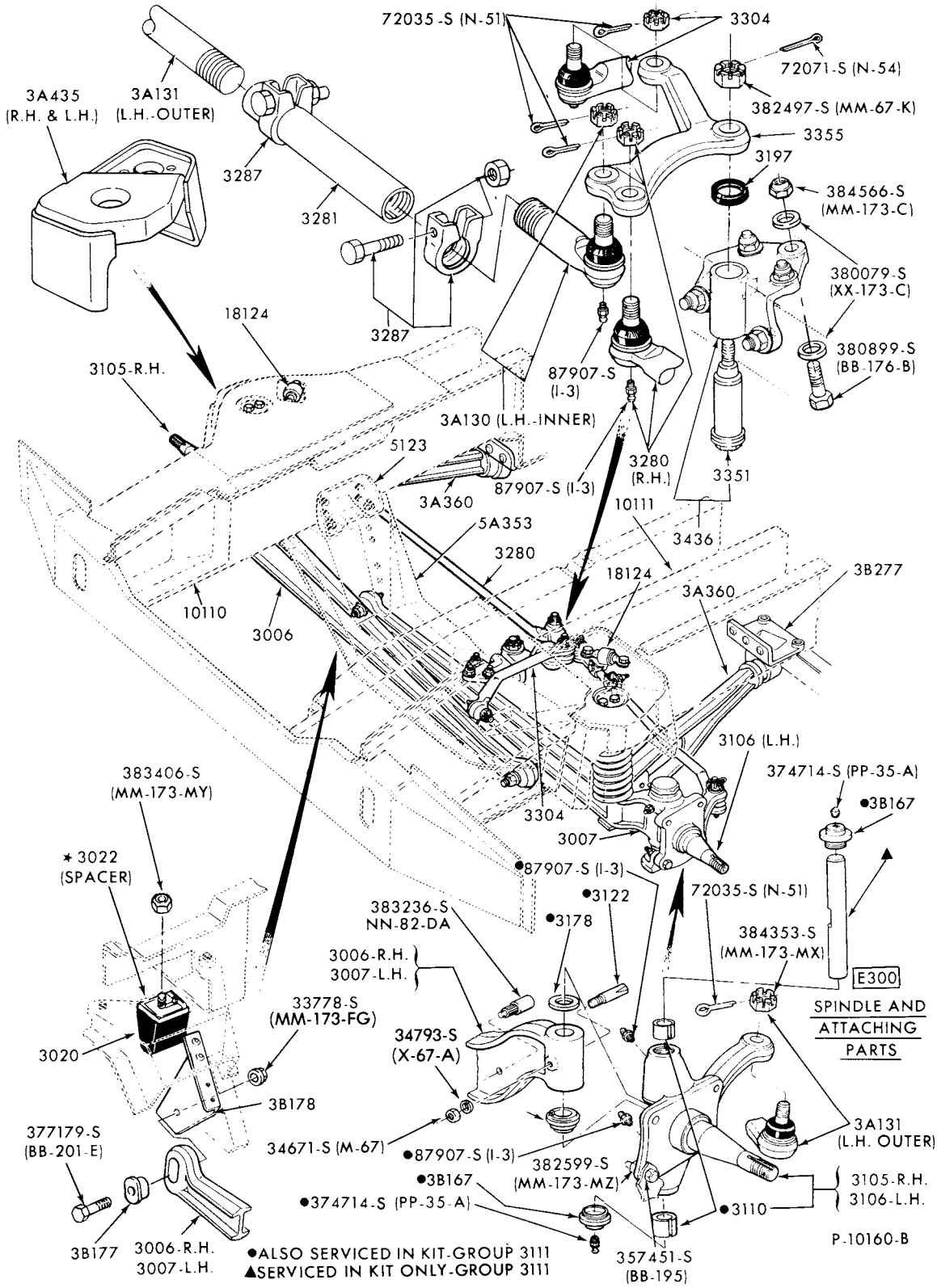

FRONT AXLE, SUSPENSION and RELATED PARTS (TWIN "I" BEAM-2.5M THRU 3.6M)

1973/74 E100/300

COPYRIGHT © 1979 FORD MOTOR COMPANY DEARBORN, MICHIGAN

1973/79 TRUCK SERIES 100/500

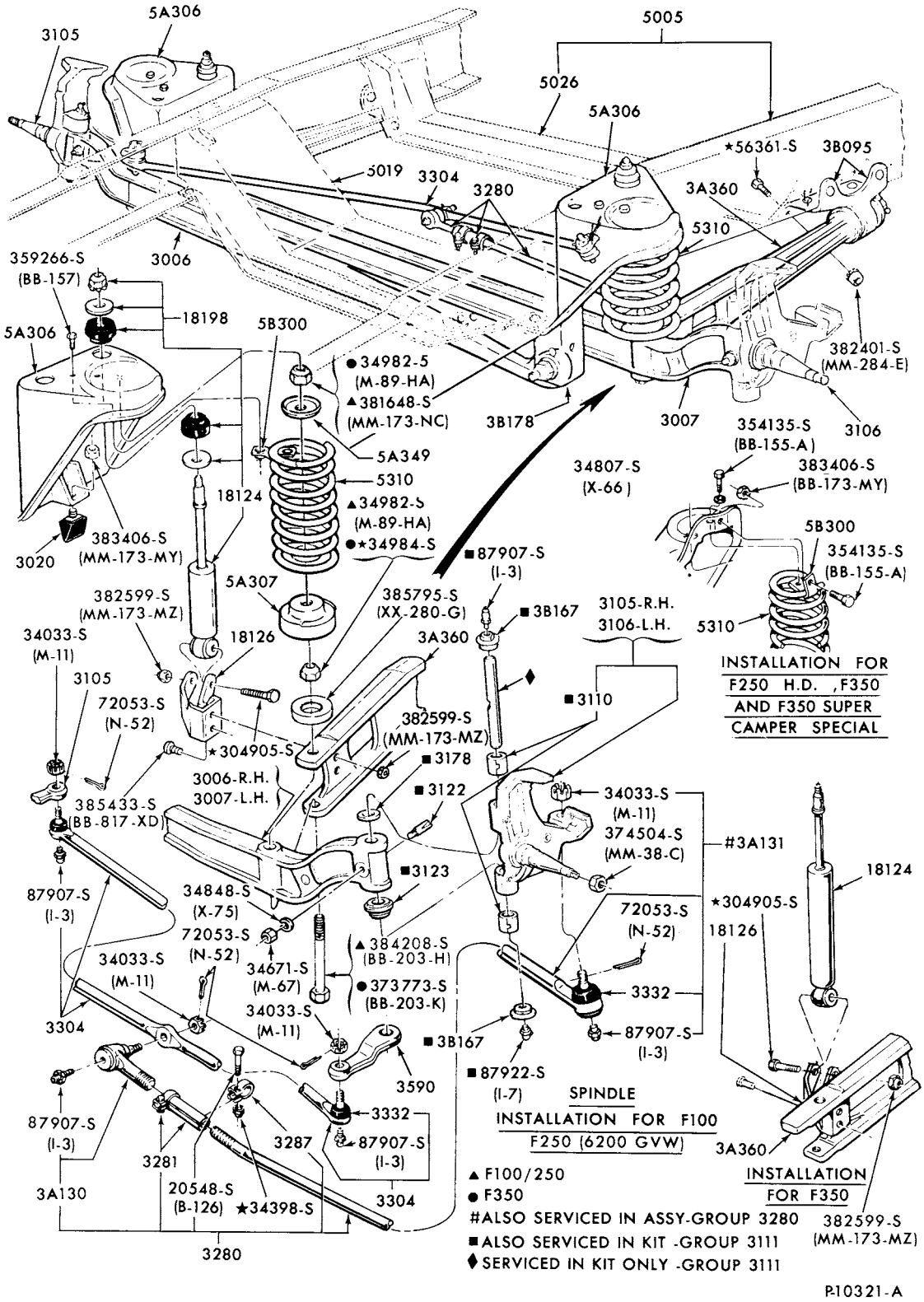

FRONT AXLE, SUSPENSION and RELATED PARTS (TWIN "I" BEAM-2.5M THRU 3.8M)

1973/ F100/350--2/W/D

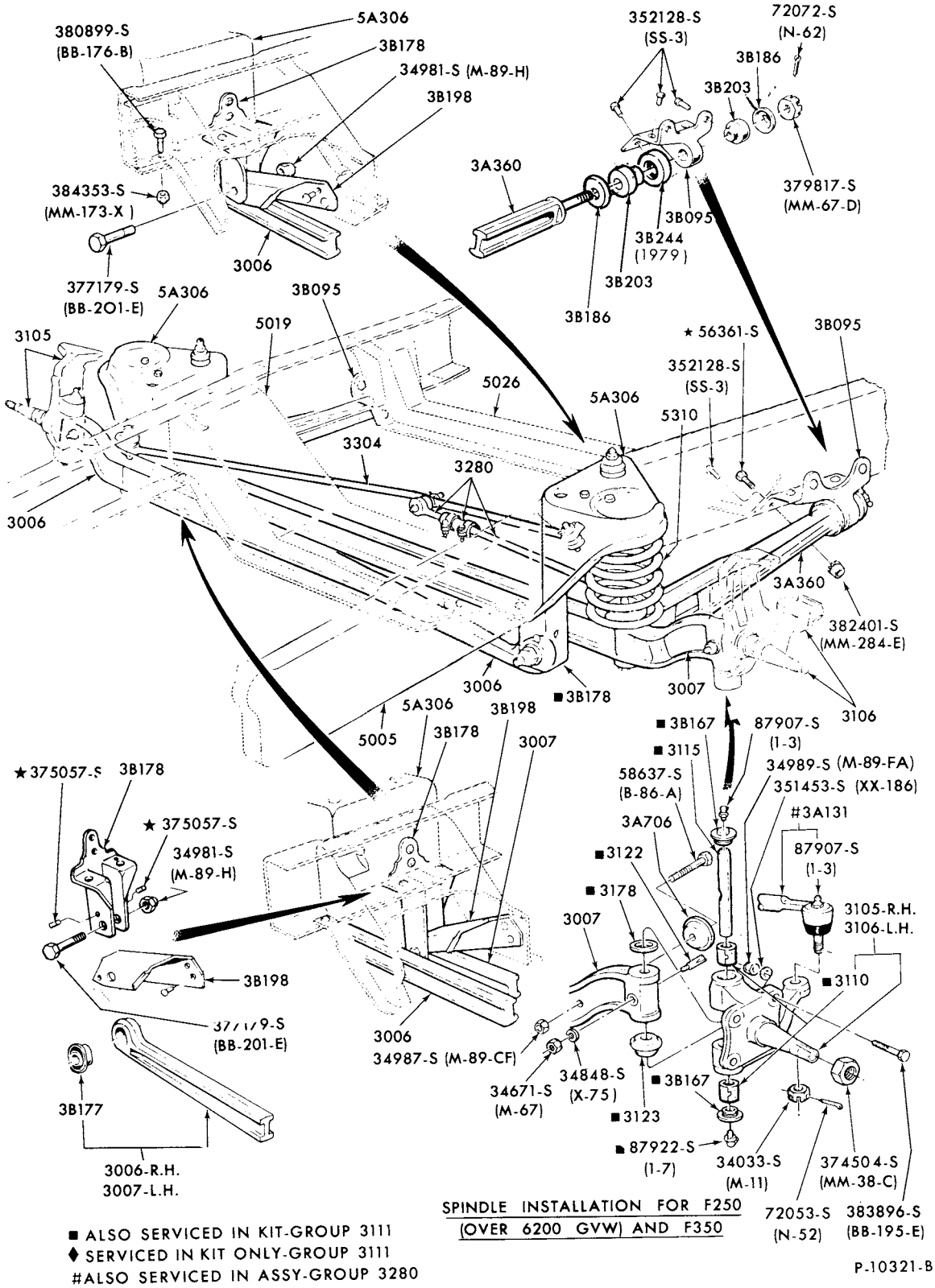

FRONT AXLE, SUSPENSION and RELATED PARTS(TWIN "I" BEAM-2.5M THRU 3.8M)

1973/ F100/350--2/W/D

COPYRIGHT © 1979 FORD MOTOR COMPANY DEARBORN, MICHIGAN

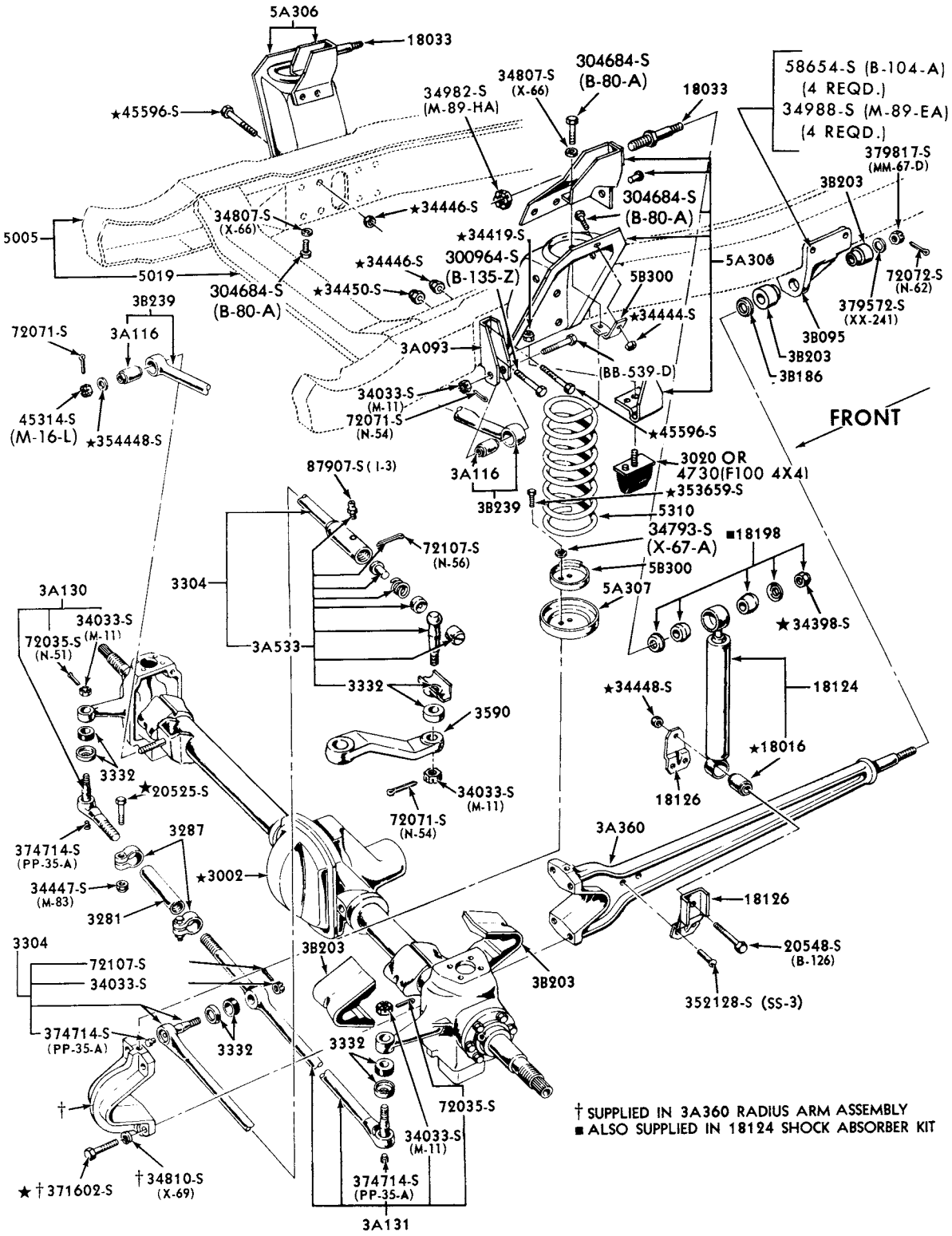

FRONT DRIVING AXLE INSTALLATION, SUSPENSION and RELATED PARTS
1973/75 F100--4/W/D

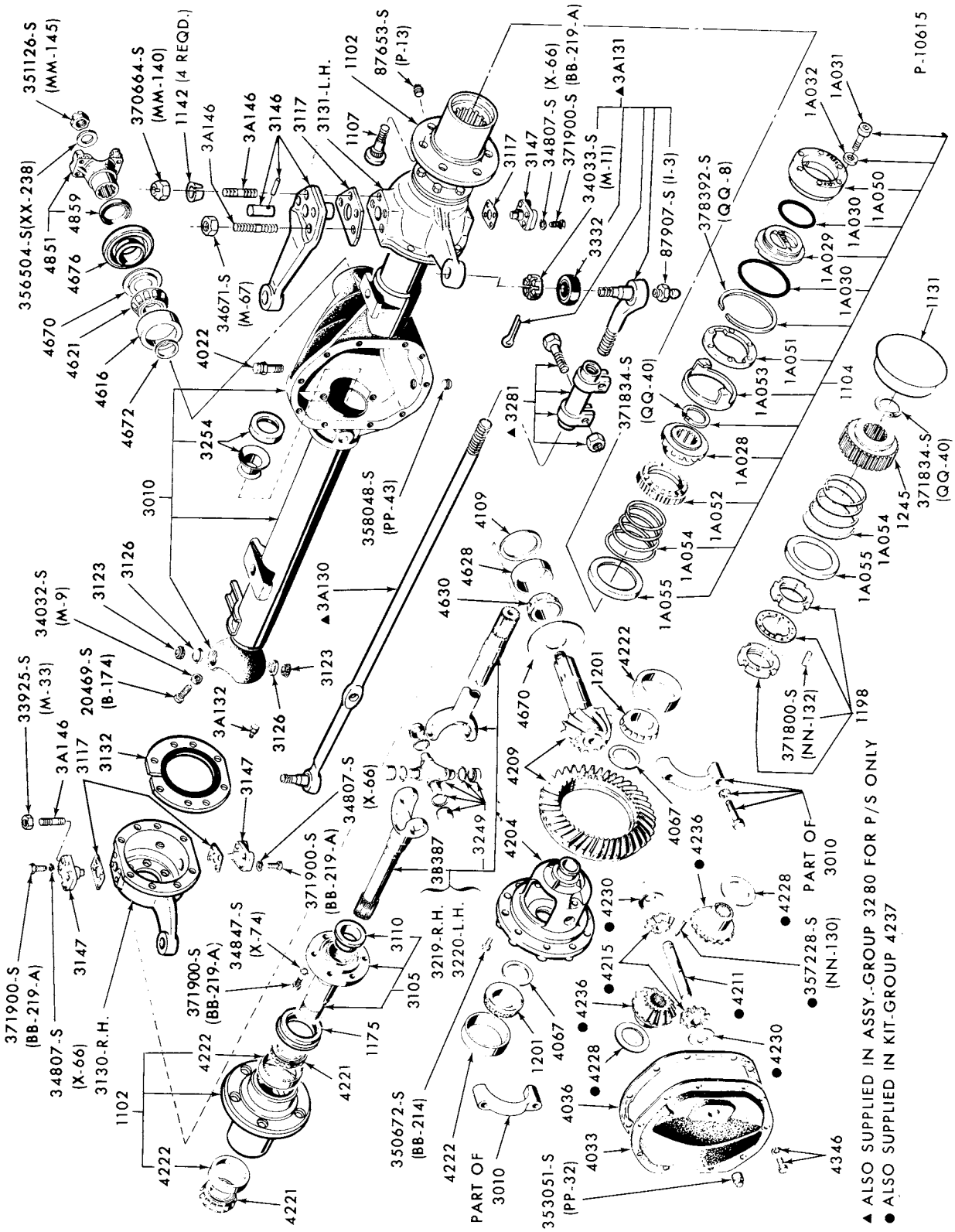

FRONT DRIVING AXLE ASSY. (DANA 44-6F MODEL)

1973 F250--4/W/D and 3.3M CAPACITY

COPYRIGHT © 1979 FORD MOTOR COMPANY - DEARBORN, MICHIGAN

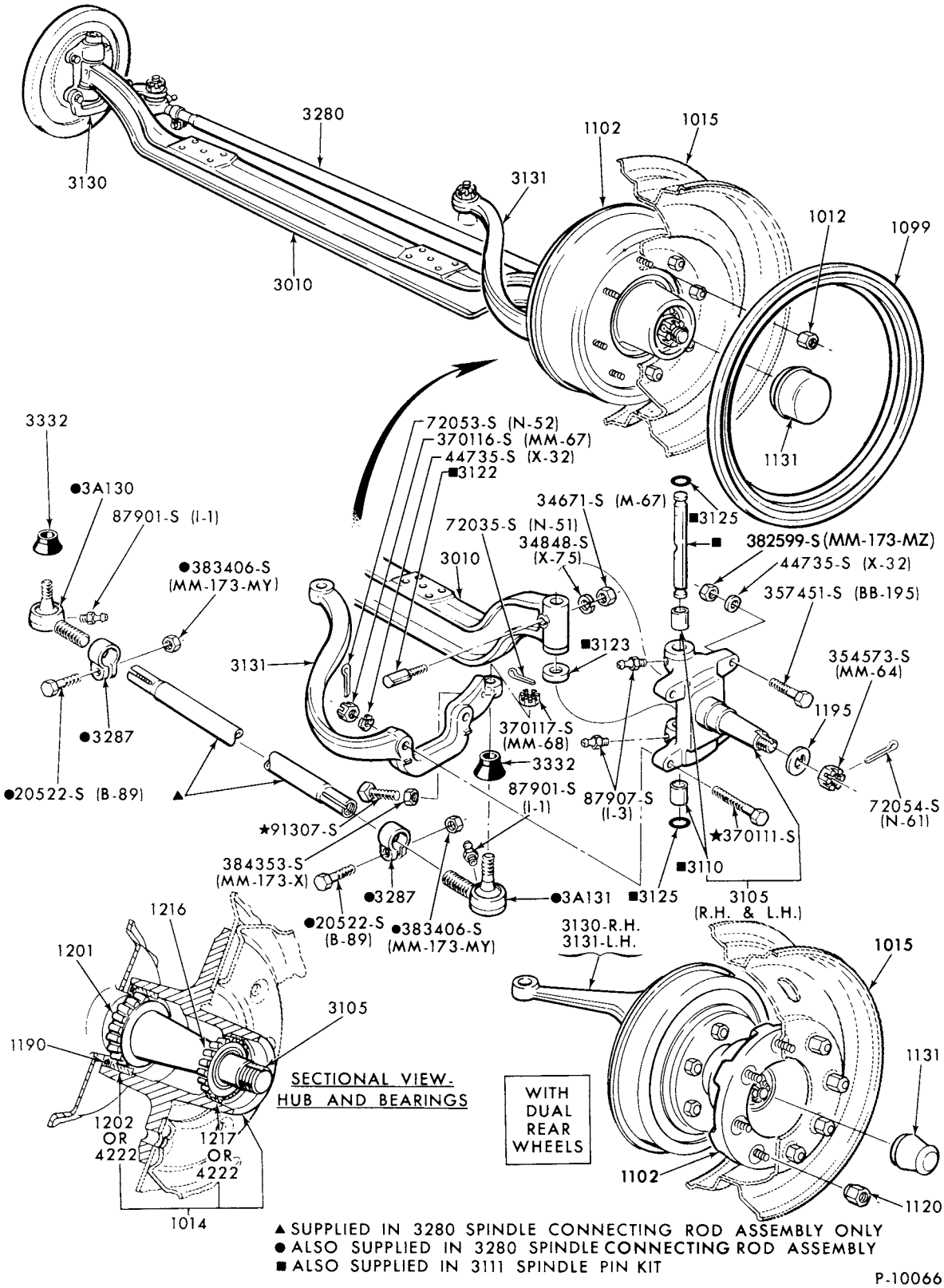

▲ SUPPLIED IN 3280 SPINDLE CONNECTING ROD ASSEMBLY ONLY
● ALSO SUPPLIED IN 3280 SPINDLE CONNECTING ROD ASSEMBLY
■ ALSO SUPPLIED IN 3111 SPINDLE PIN KIT

P-10066

FRONT AXLE and RELATED PARTS (3.8M)

1973/77 P350/400

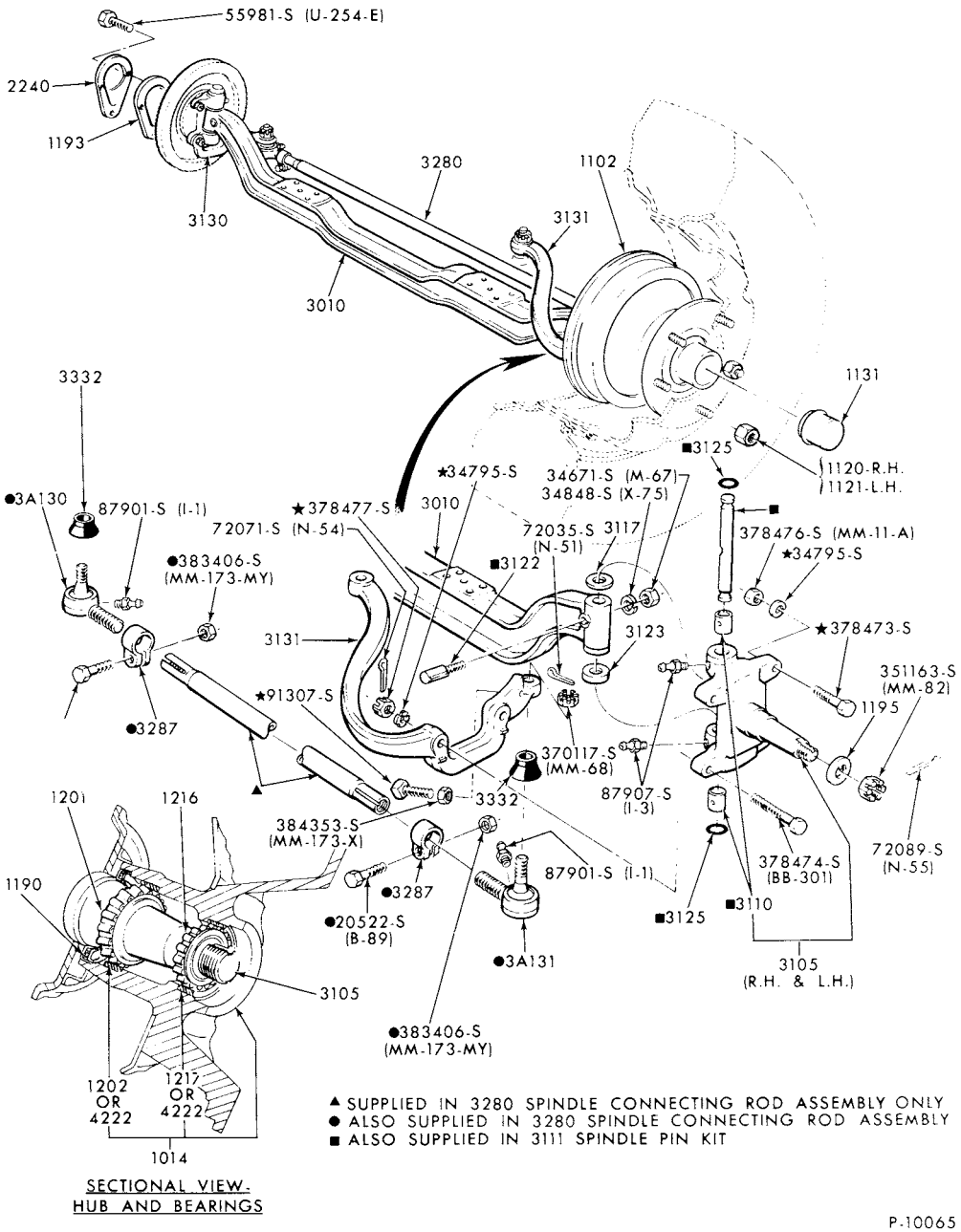

FRONT AXLE and RELATED PARTS (4.7M)

1973/77 P500

COPYRIGHT © 1979 FORD MOTOR COMPANY, DEARBORN, MICHIGAN

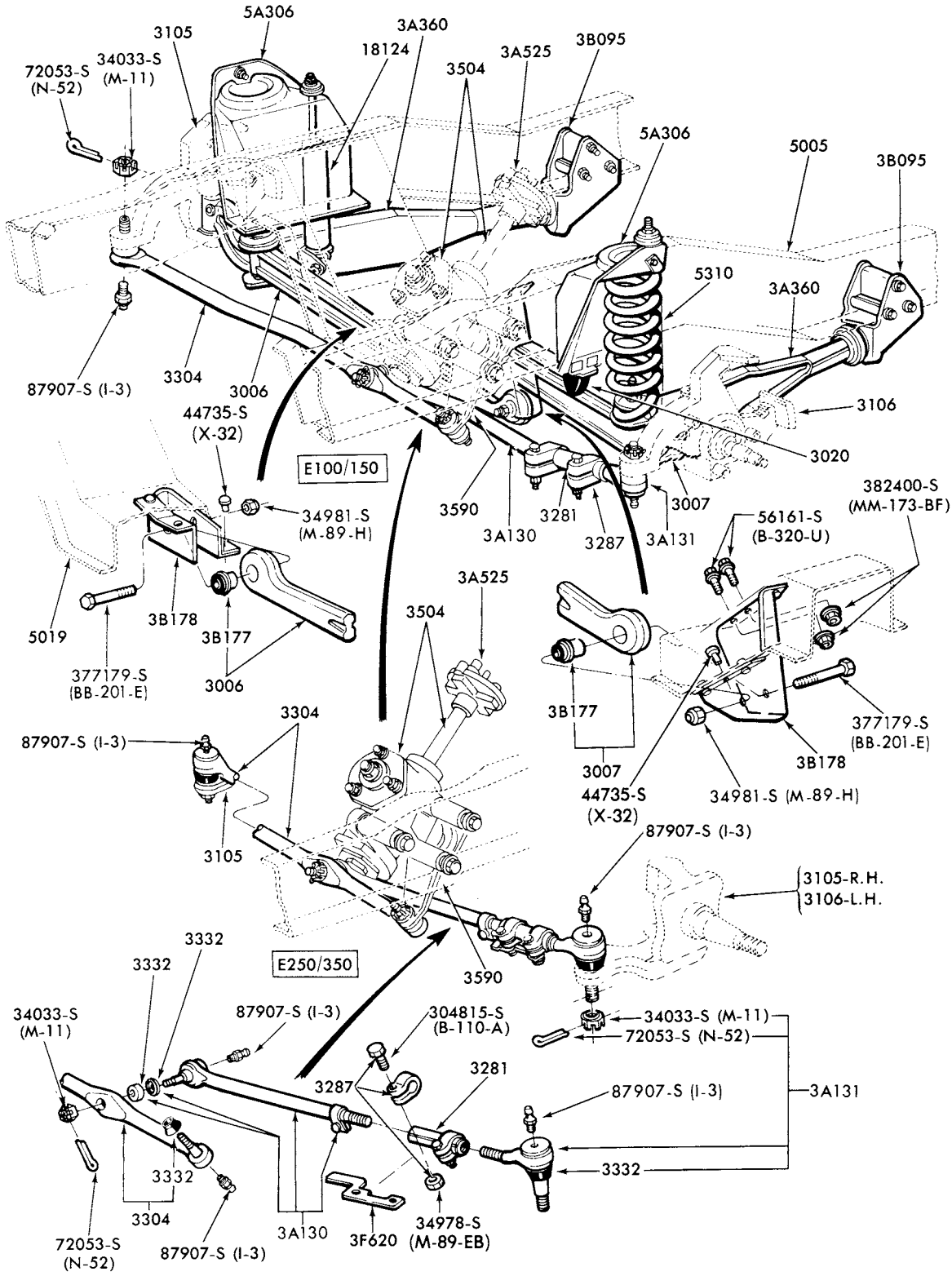

P-12047-A

FRONT AXLE, SUSPENSION and RELATED PARTS (ALSO SEE PAGE 11)
1975/ E100/350

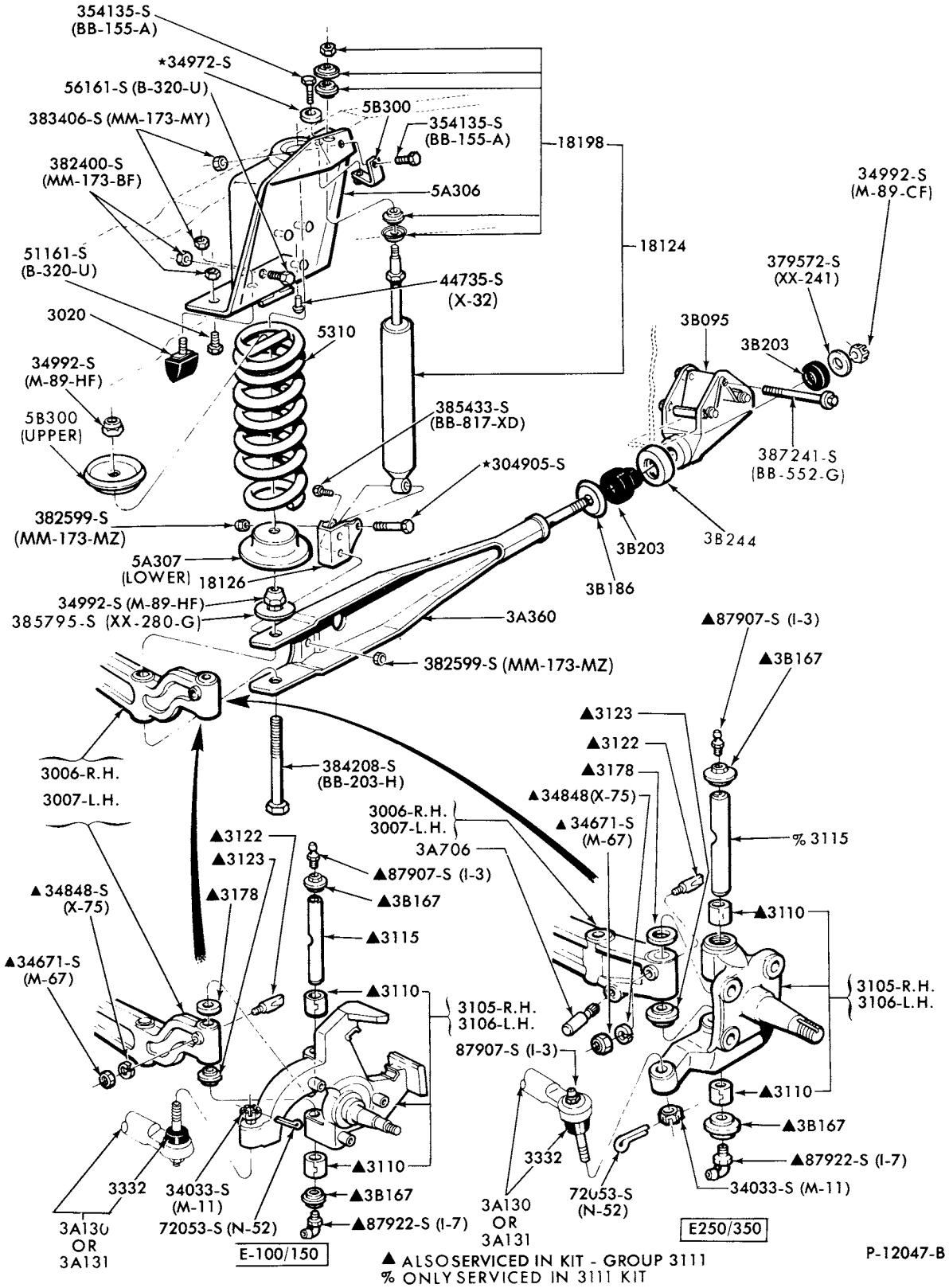

FRONT AXLE, SUSPENSION and RELATED PARTS (ALSO SEE PAGE 10)
1975/ E100/350

COPYRIGHT © 1979 - FORD MOTOR COMPANY DEARBORN, MICHIGAN

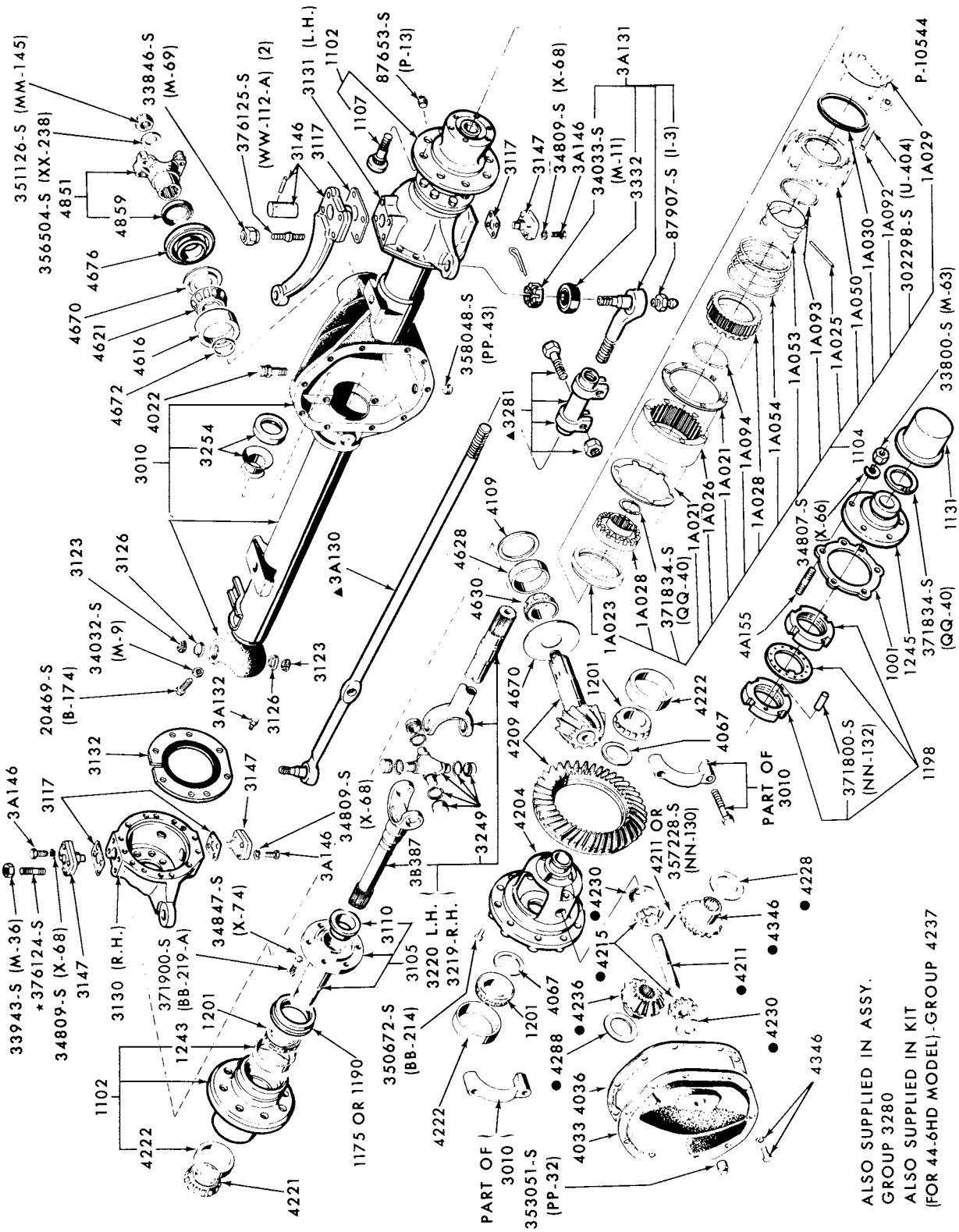

FRONT DRIVING AXLE ASSY.
1973/77 F250/350 (EXC. CREW CAB)--4/W/D and 3.5M CAPACITY (DANA 44-6FHD)
1973/75 F250 (CREW CAB)--4/W/D and 3.8M CAPACITY (DANA 60-F)

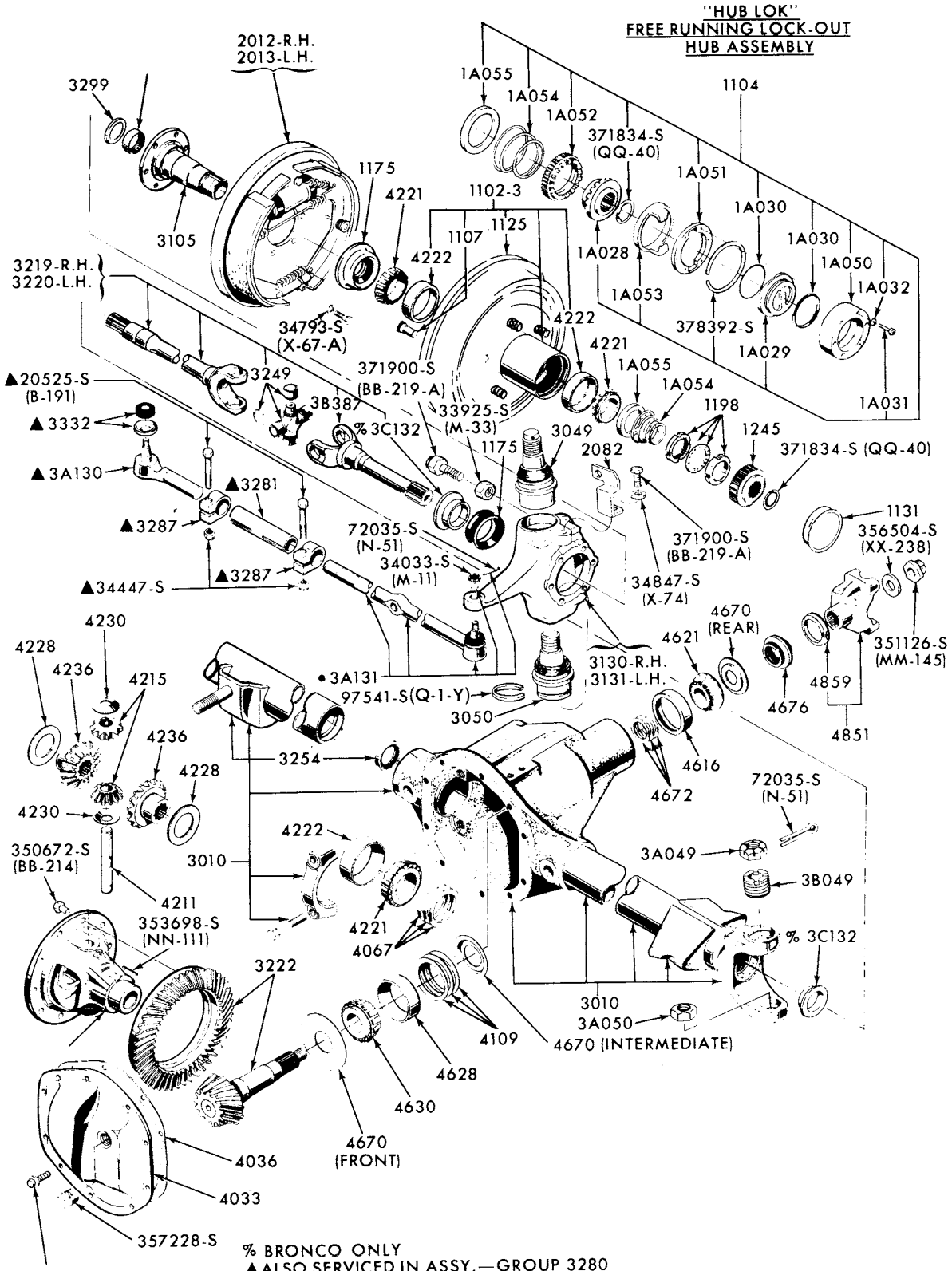

% BRONCO ONLY
▲ALSO SERVICED IN ASSY.—GROUP 3280
•SERVICED IN ASSY. ONLY—GROUP 3280

P-10300

FRONT DRIVING AXLE ASSY. (DANA 44-7F MODEL)
1973/75 F100--4/W/D

COPYRIGHT © 1979 FORD MOTOR COMPANY DEARBORN, MICHIGAN

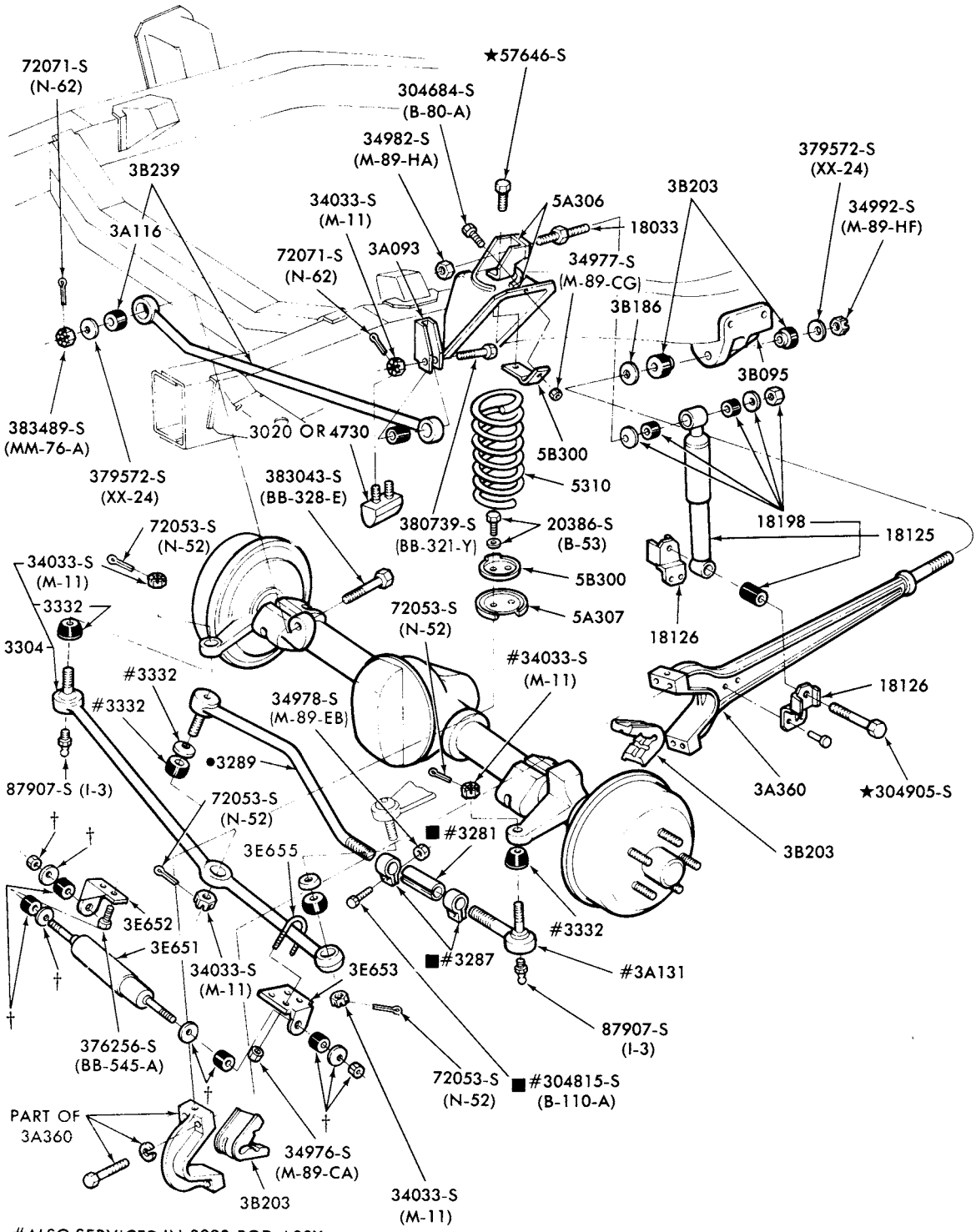

#ALSO SERVICED IN 3280 ROD ASSY.
•ONLY SERVICED IN 3280 ROD ASSY.

■ALSO SERVICED IN 3310 KIT (1978 ONLY)
† SERVICED ONLY IN 3E655 KIT

P-12741

FRONT DRIVING AXLE INSTALLATION and RELATED PARTS
1976/77 F100/150--4/W/D

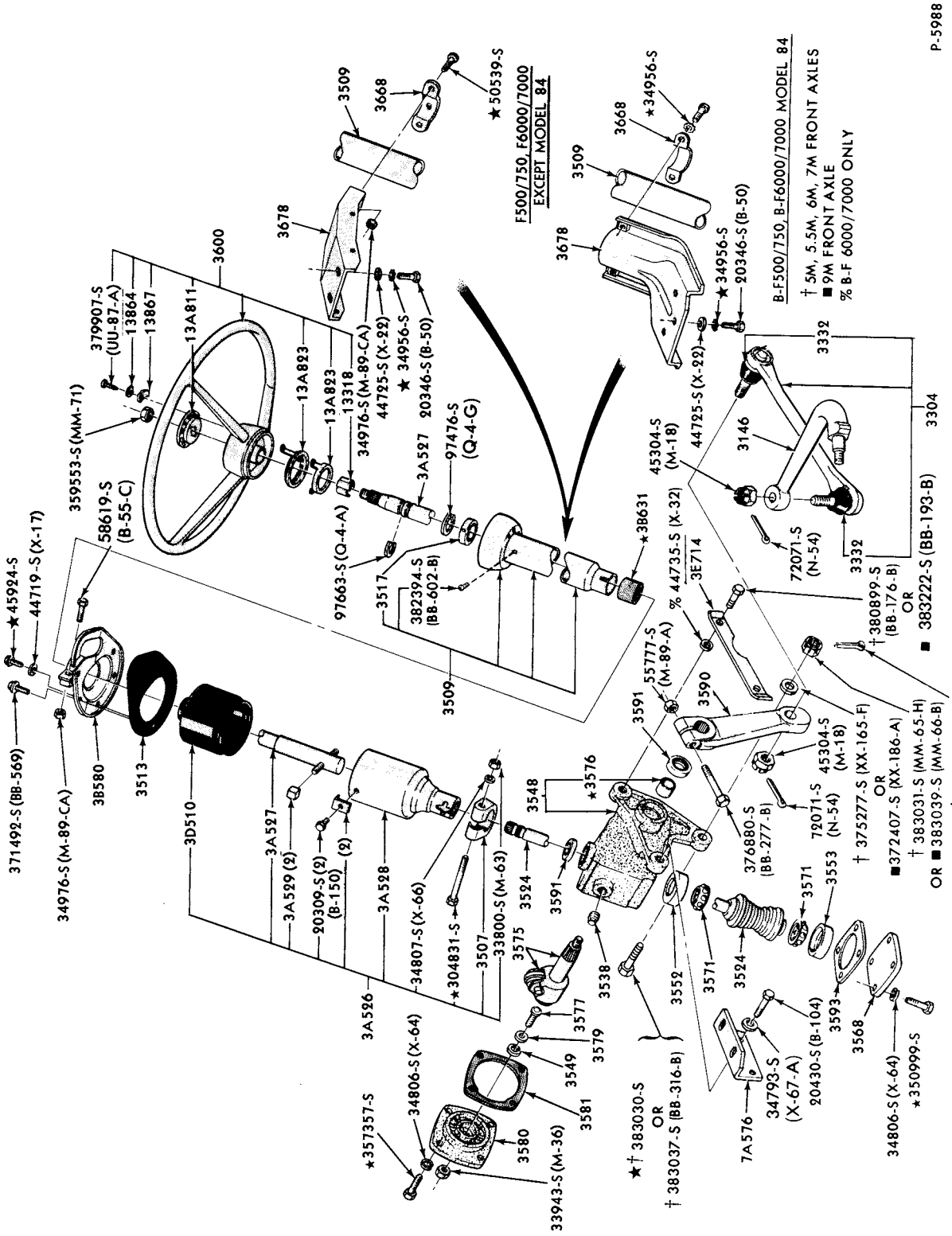

STEERING COLUMN, LINKAGE and GEAR
1973/77 B-F500

COPYRIGHT © 1979 FORD MOTOR COMPANY, DEARBORN, MICHIGAN

1973/79 TRUCK SERIES 100/500

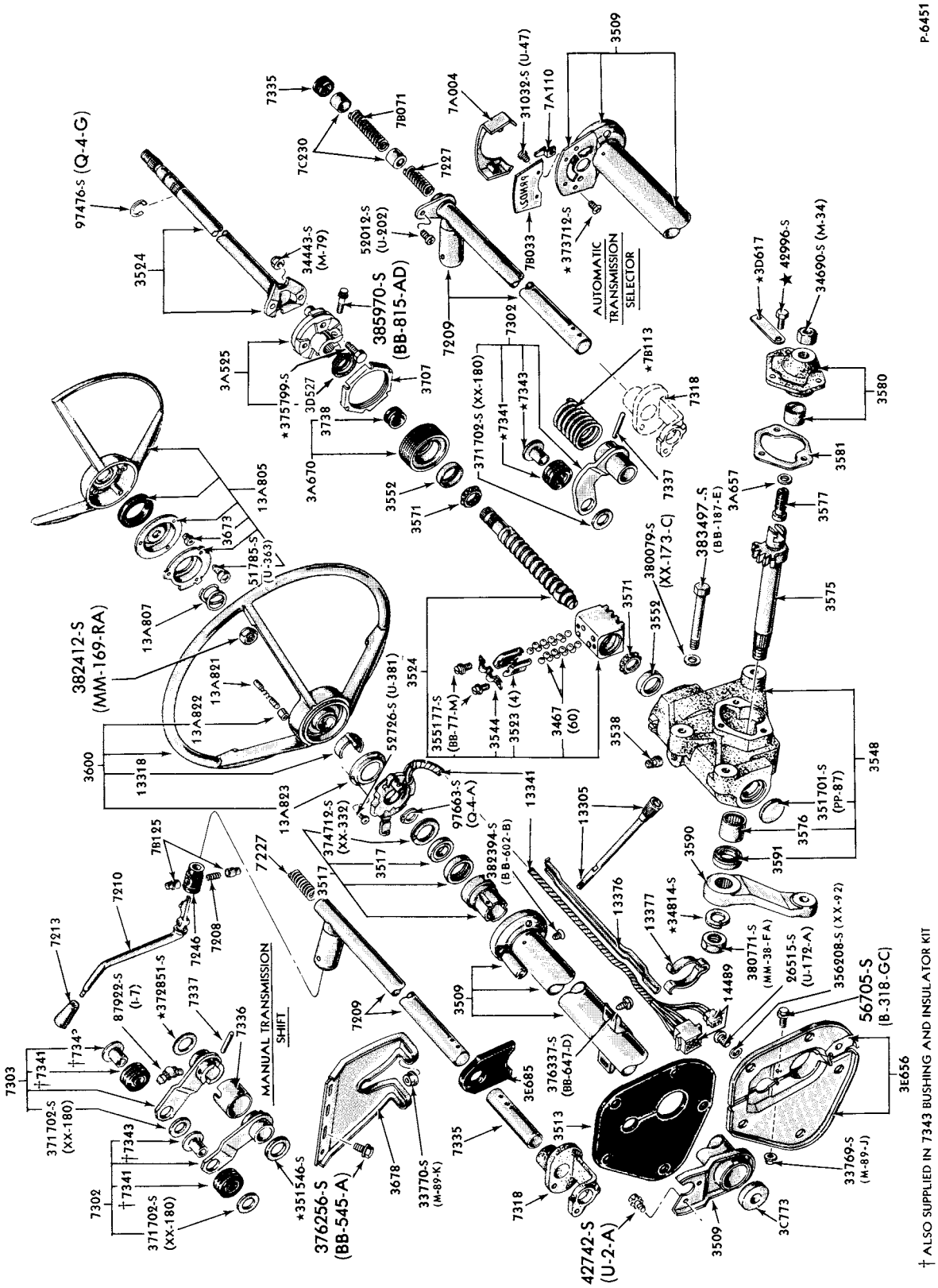

STEERING COLUMN, GEAR, WHEEL and TRANSMISSION SHIFT CONTROL

1973/74 E100/300

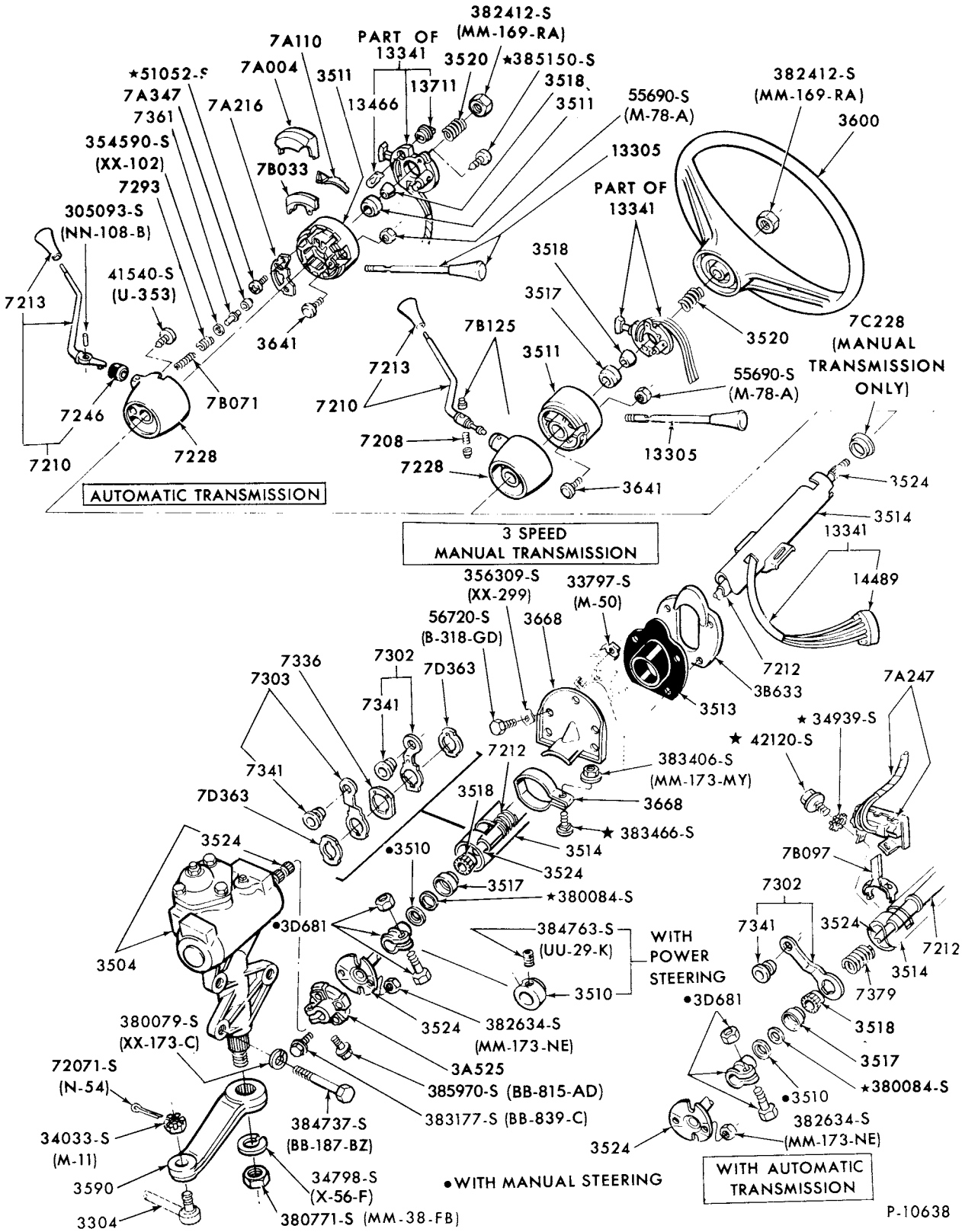

STEERING COLUMN and TRANSMISSION SHIFT CONTROLS

1973 F100/350--2/W/D

COPYRIGHT © 1979 FORD MOTOR-DEARBORN, MICHIGAN COMPANY

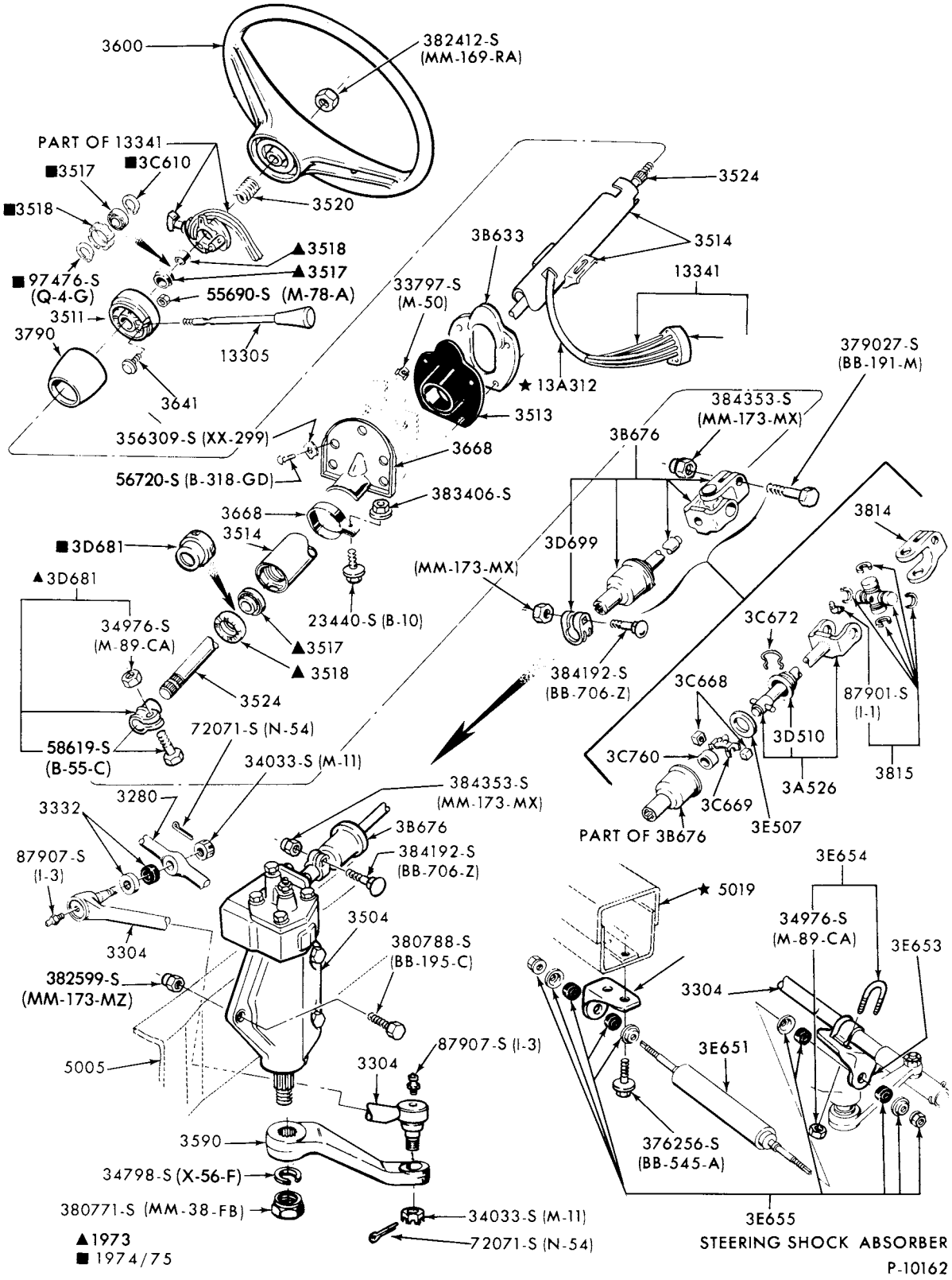

STEERING COLUMN and LINKAGE
1973/75 F100--4/W/D and 4/M/T

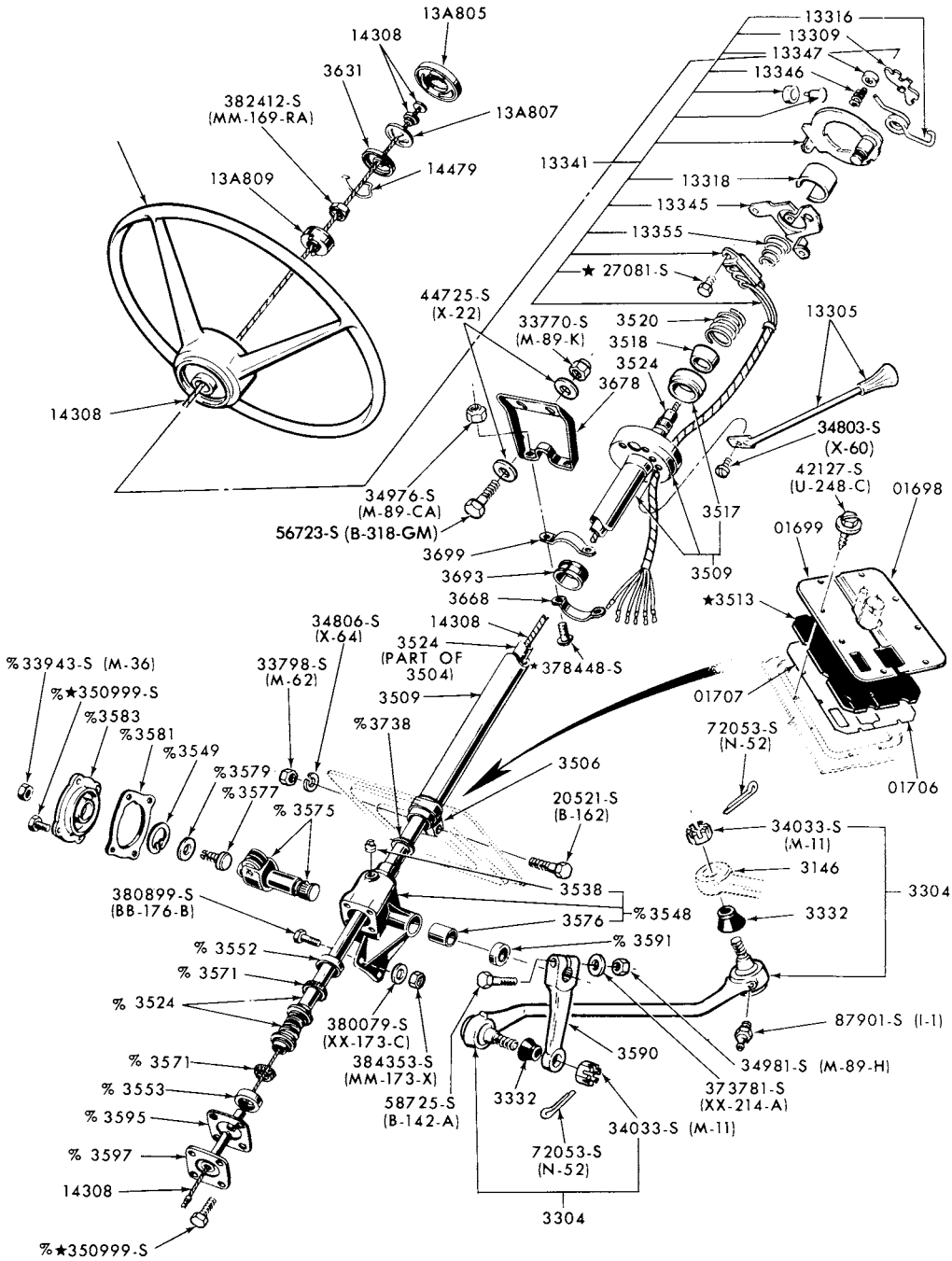

% ALSO SUPPLIED IN 3504 GEAR ASSEMBLY

P-9966

STEERING COLUMN, LINKAGE, GEAR ASSY. and RELATED PARTS

1973/77 P350/500--4/M/T

COPYRIGHT © 1979 FORD MOTOR COMPANY—DEARBORN, MICHIGAN

1973/79 TRUCK SERIES 100/500

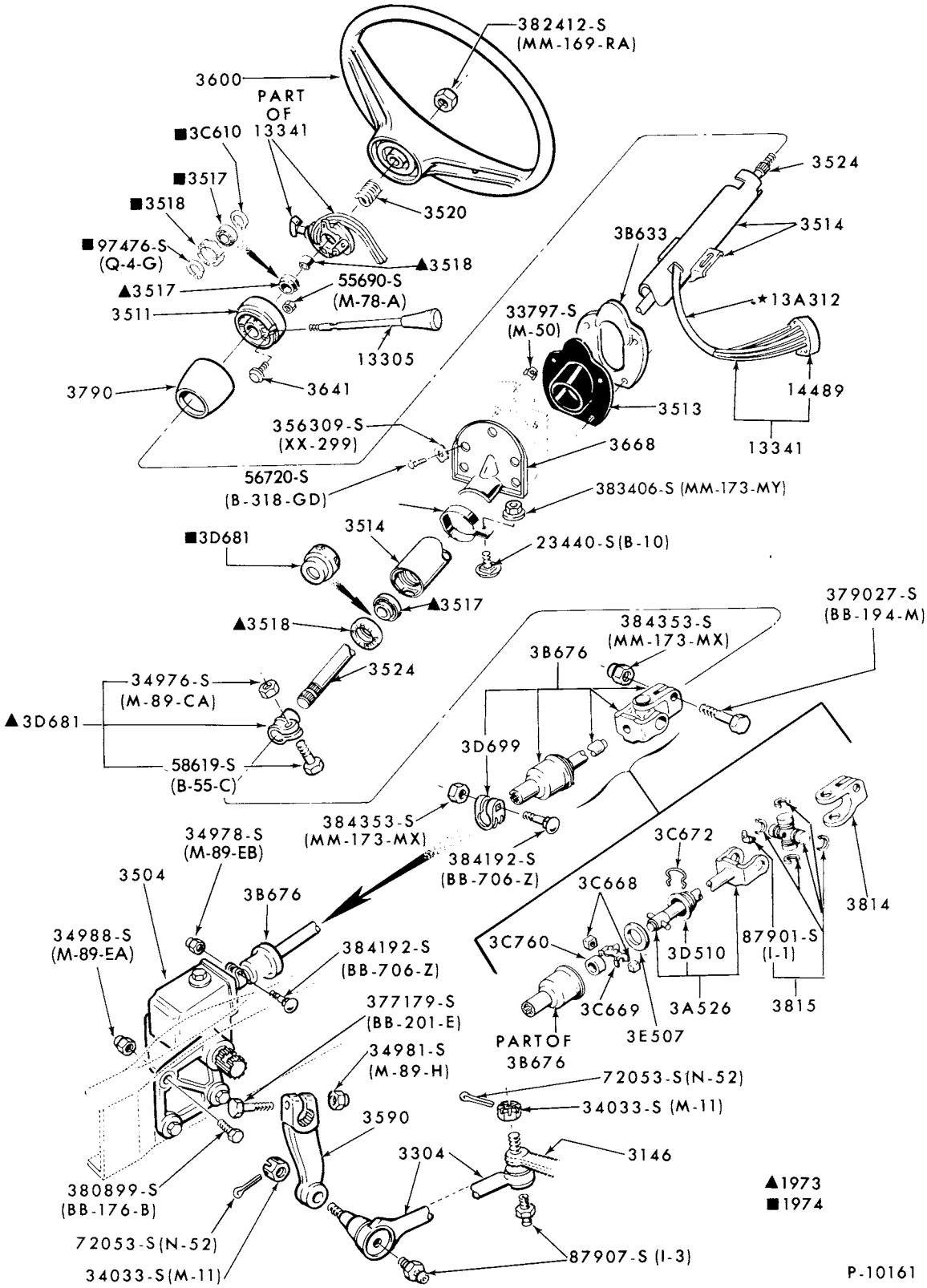

STEERING COLUMN, LINKAGE and RELATED PARTS

1973/75 F250--4/W/D and 4/M/T

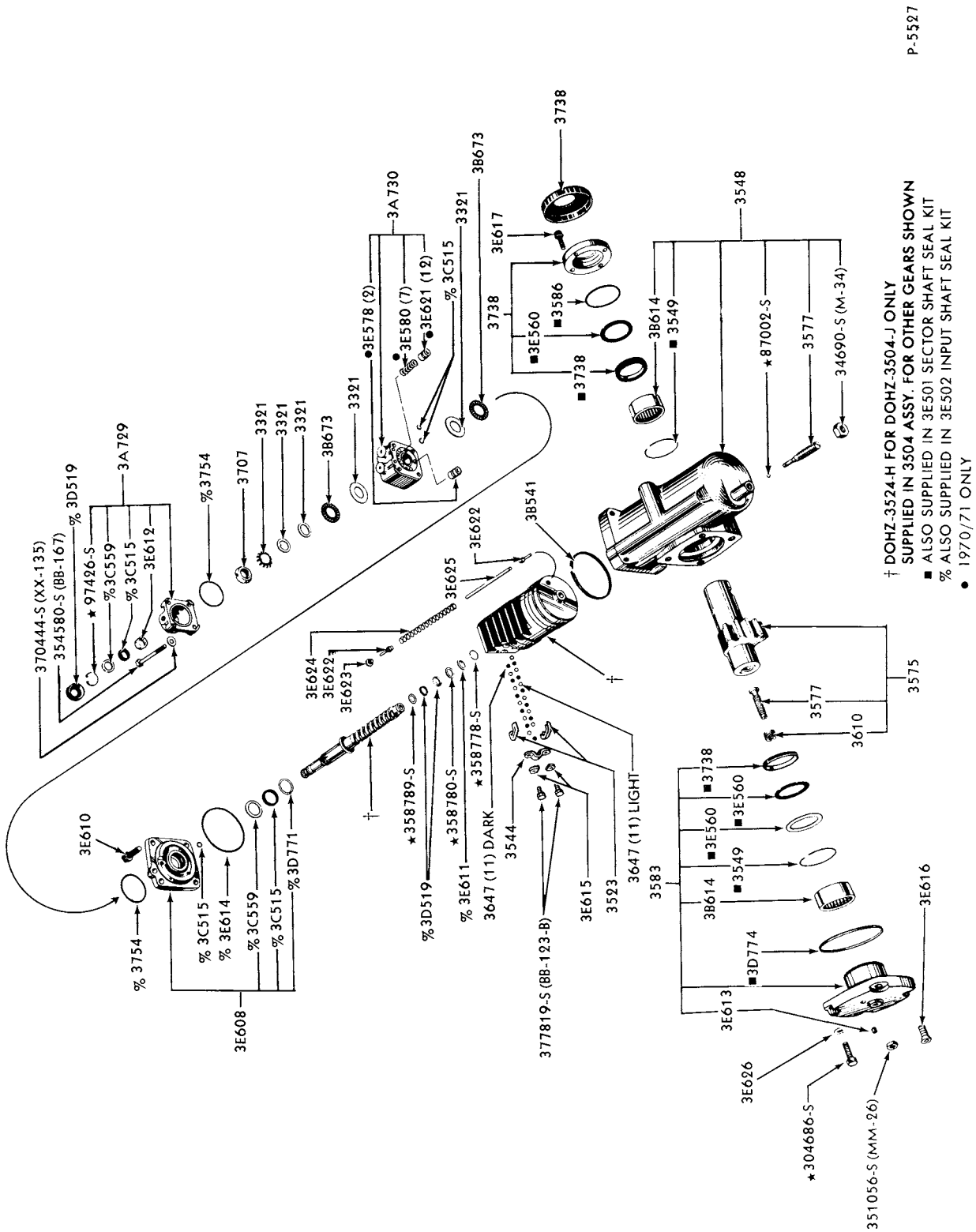

POWER STEERING GEAR ASSY.-ROSS HF-54
1973/77 B-F500 and 1973/76 M450/500

COPYRIGHT © 1979 FORD MOTOR COMPANY, DEARBORN, MICHIGAN

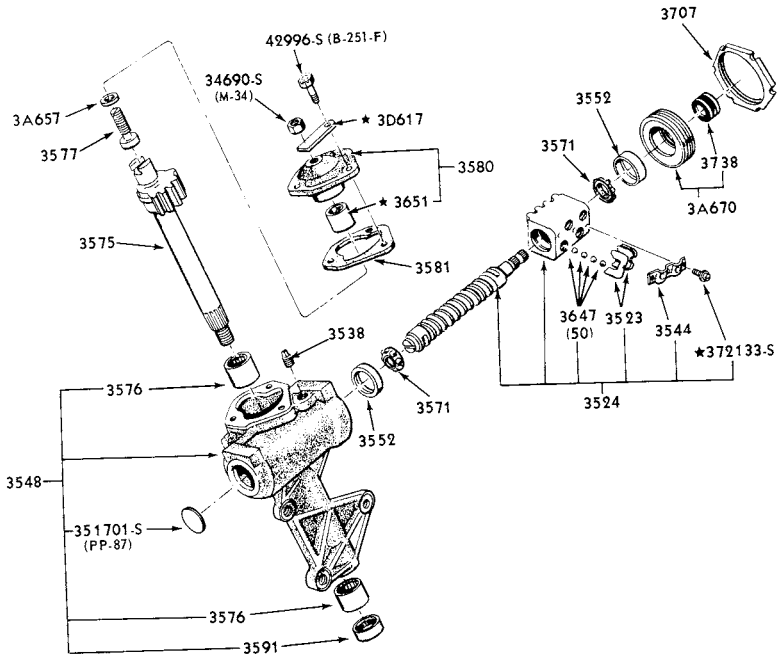

P-4608

MANUAL STEERING GEAR ASSY.
1973/ F100/350--2/W/D

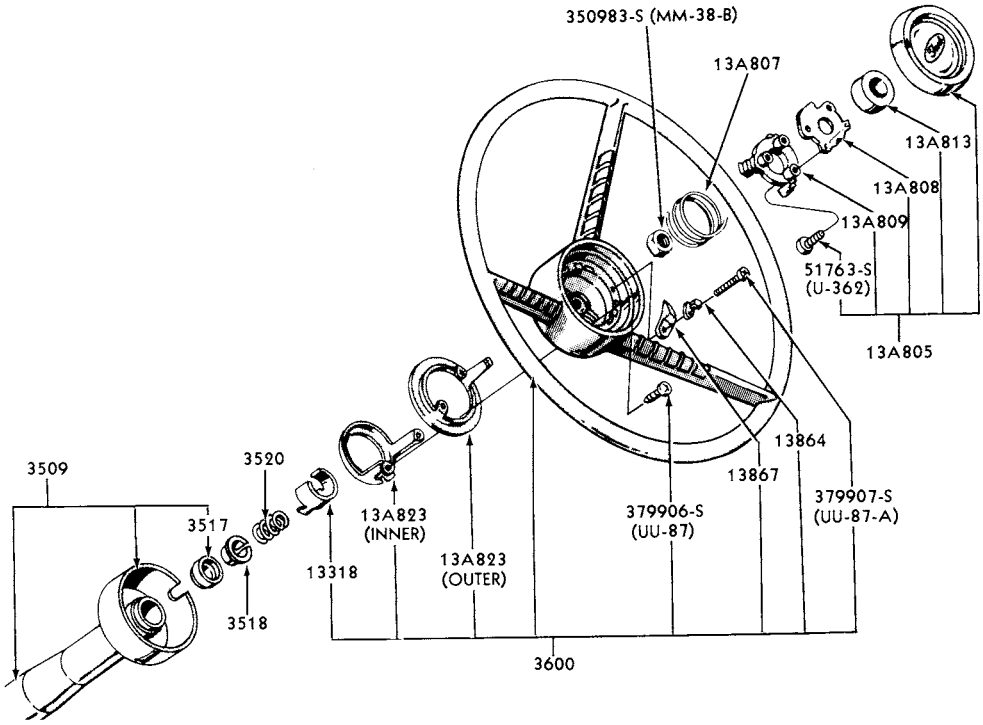

P-5802

STEERING WHEEL, HORN MECHANSIM and RELATED PARTS
1973/77 B-F500

P-6792

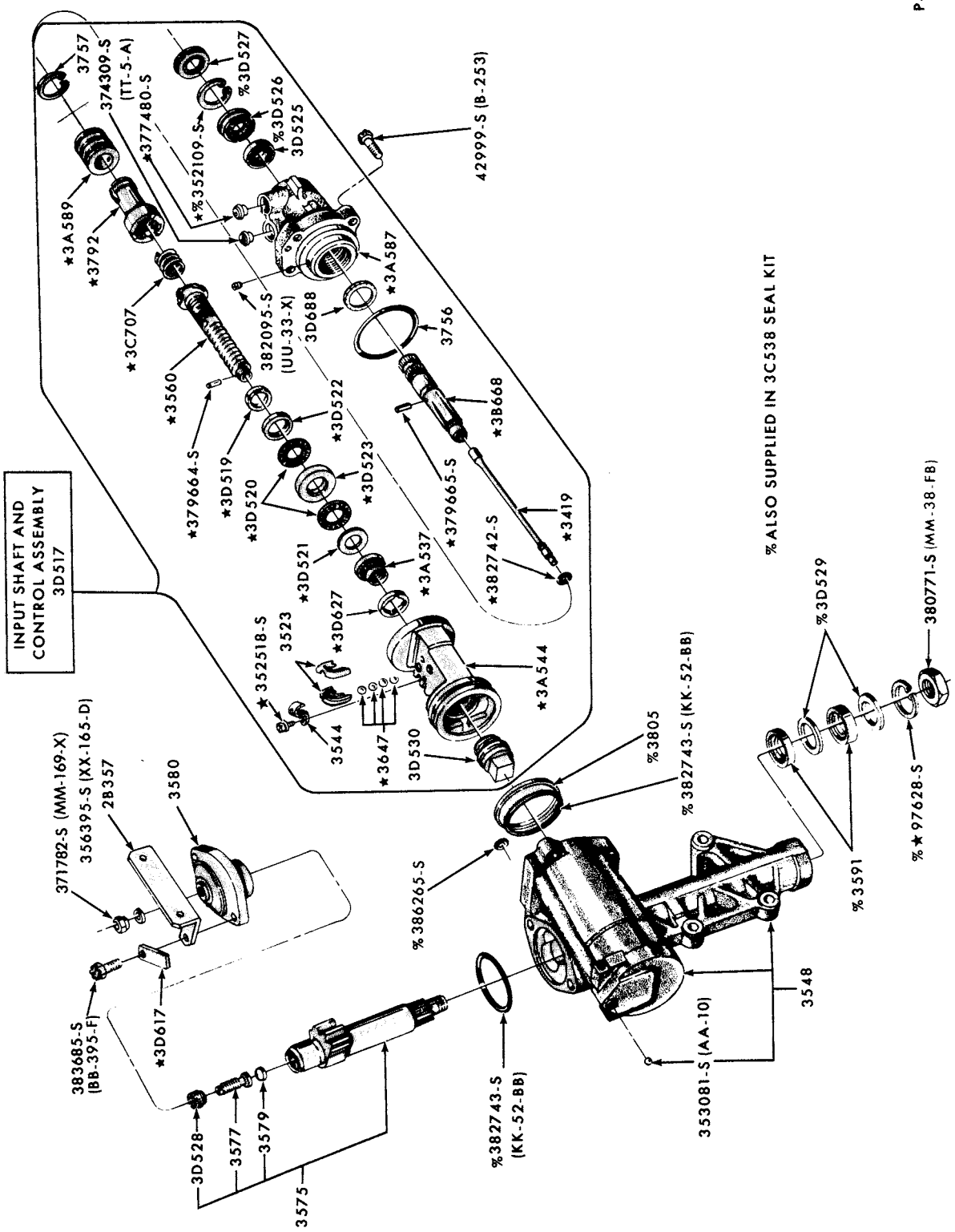

POWER STEERING GEAR ASSY.-FORD DESIGN (SPOOL VALVE TYPE-#SPA-AB,AJ)
1973/74 F100/350--2/W/D

COPYRIGHT © 1980— FORD MOTOR COMPANY —DEARBORN, MICHIGAN

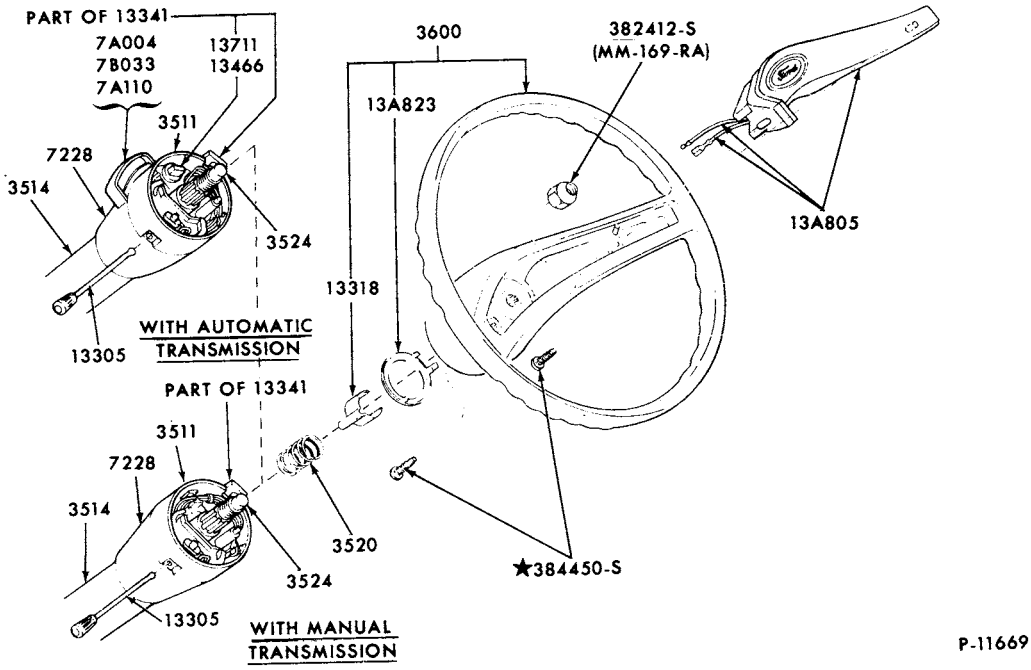

STEERING WHEEL, HORN and RELATED PARTS
1973/ E-F100/350

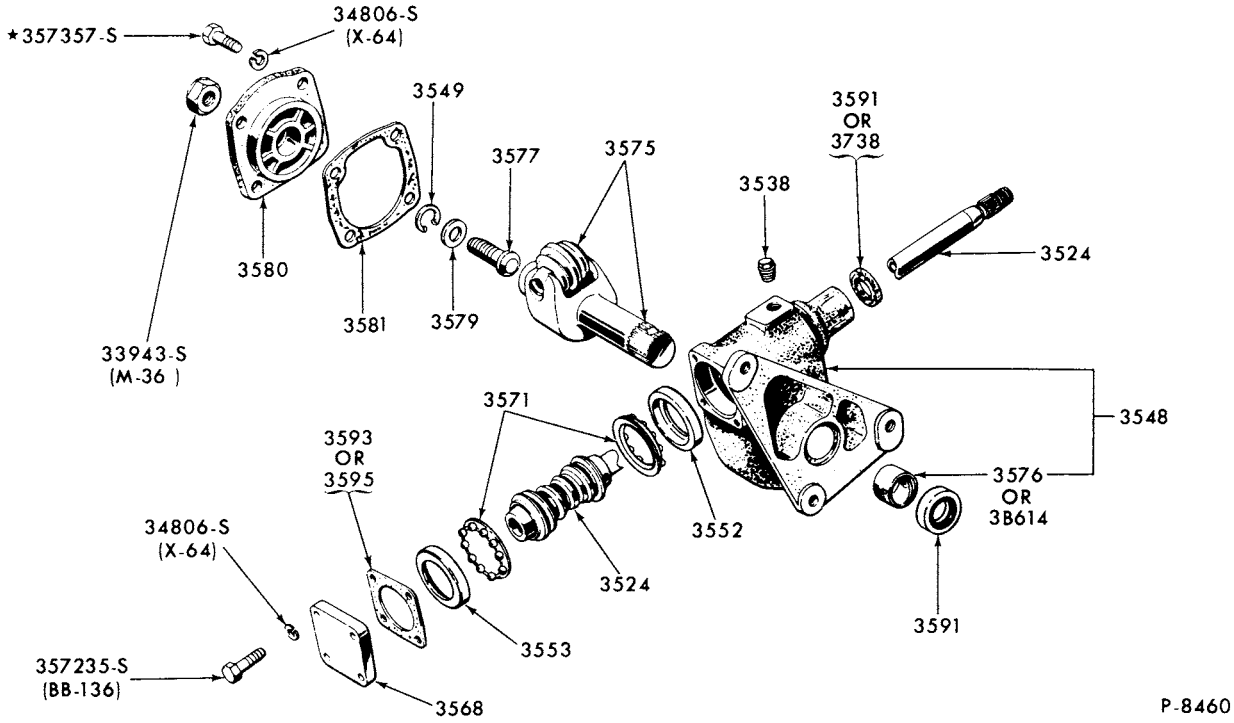

GEAR ASSY.-ROSS 375
1973/77 F250--4/W/D and 1973/77 B-F500

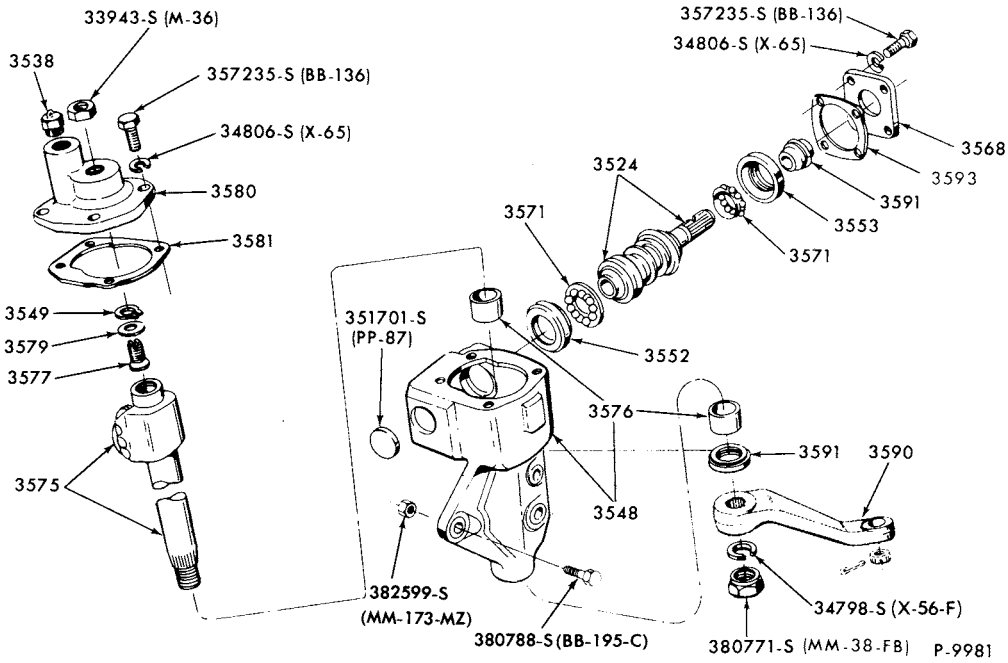

GEAR ASSY.-ROSS 24J

1973/78 F100/150--4/W/D

COPYRIGHT © 1979 FORD MOTOR COMPANY DEARBORN, MICHIGAN

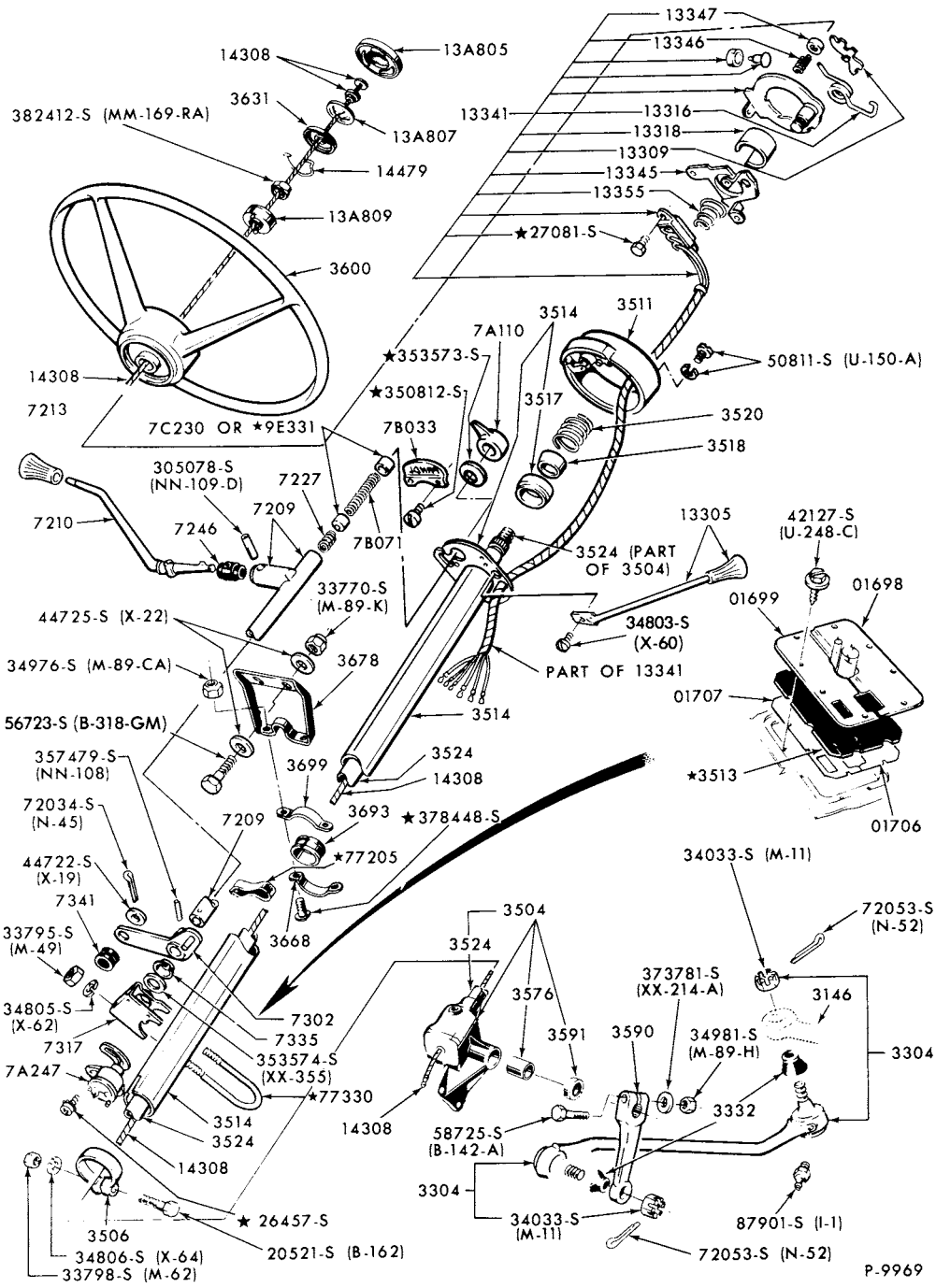

STEERING COLUMN, LINKAGE, TRANSMISSION GEARSHIFT CONTROL and RELATED PARTS
1973/77 P350/500--A/T

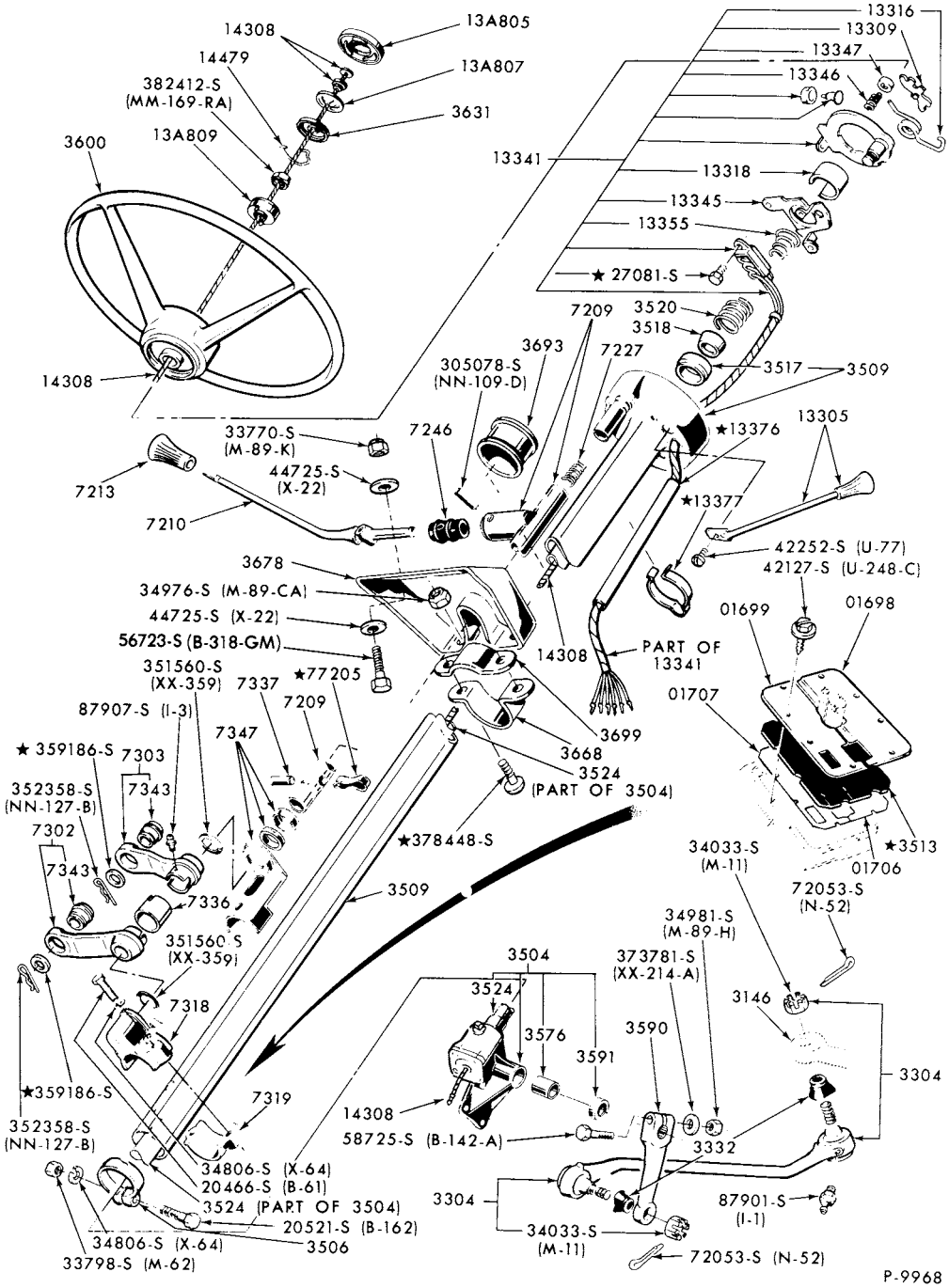

STEERING COLUMN, LINKAGE and TRANSMISSION GEARSHIFT CONTROL

1973/77 P350/500--3/M/T

COPYRIGHT © 1979 FORD MOTOR COMPANY - DEARBORN, MICHIGAN

1973/79 TRUCK SERIES 100/500

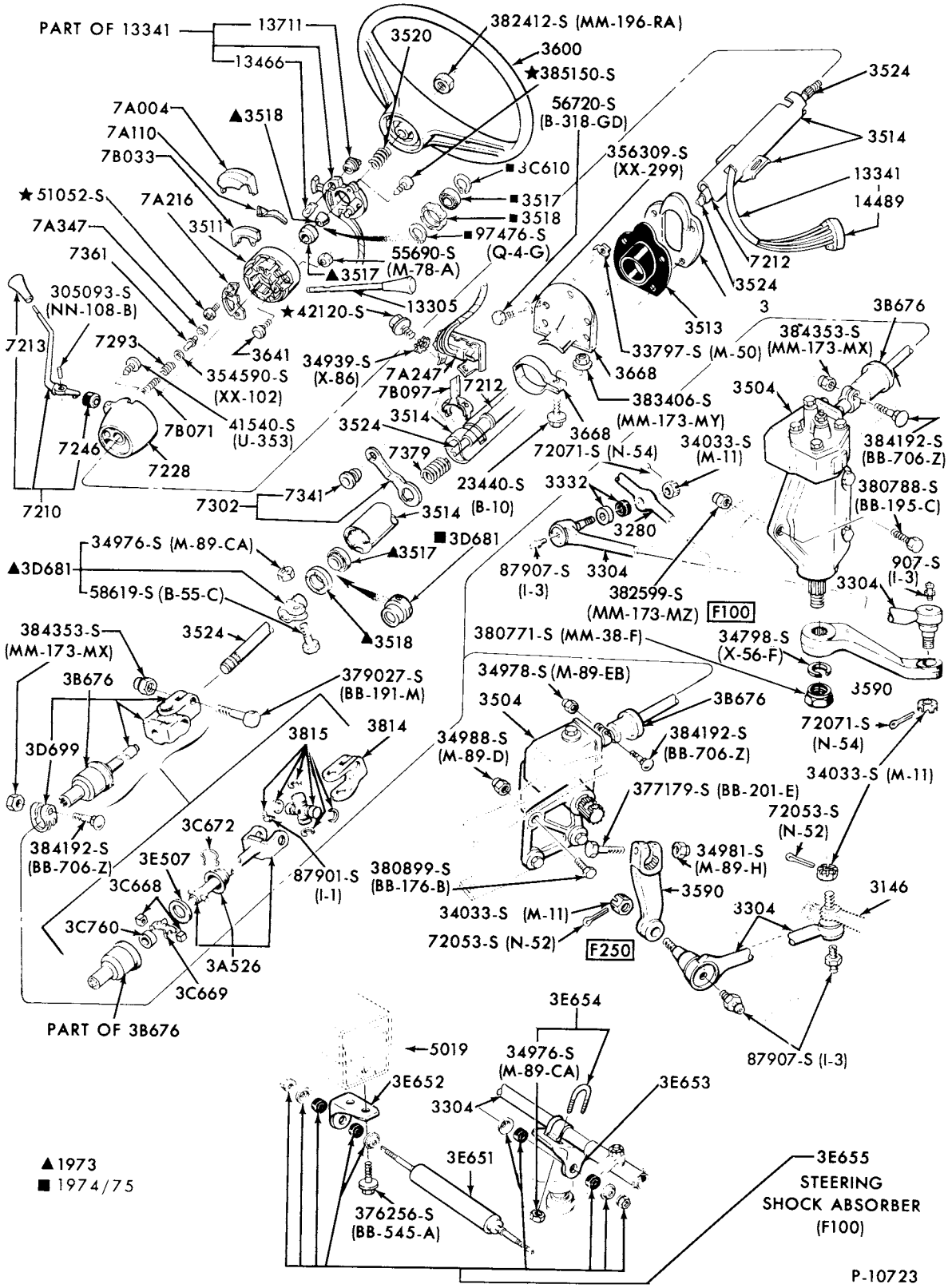

STEERING COLUMN and LINKAGE

1973/75 F100/250--4/W/D with A/T or P/S

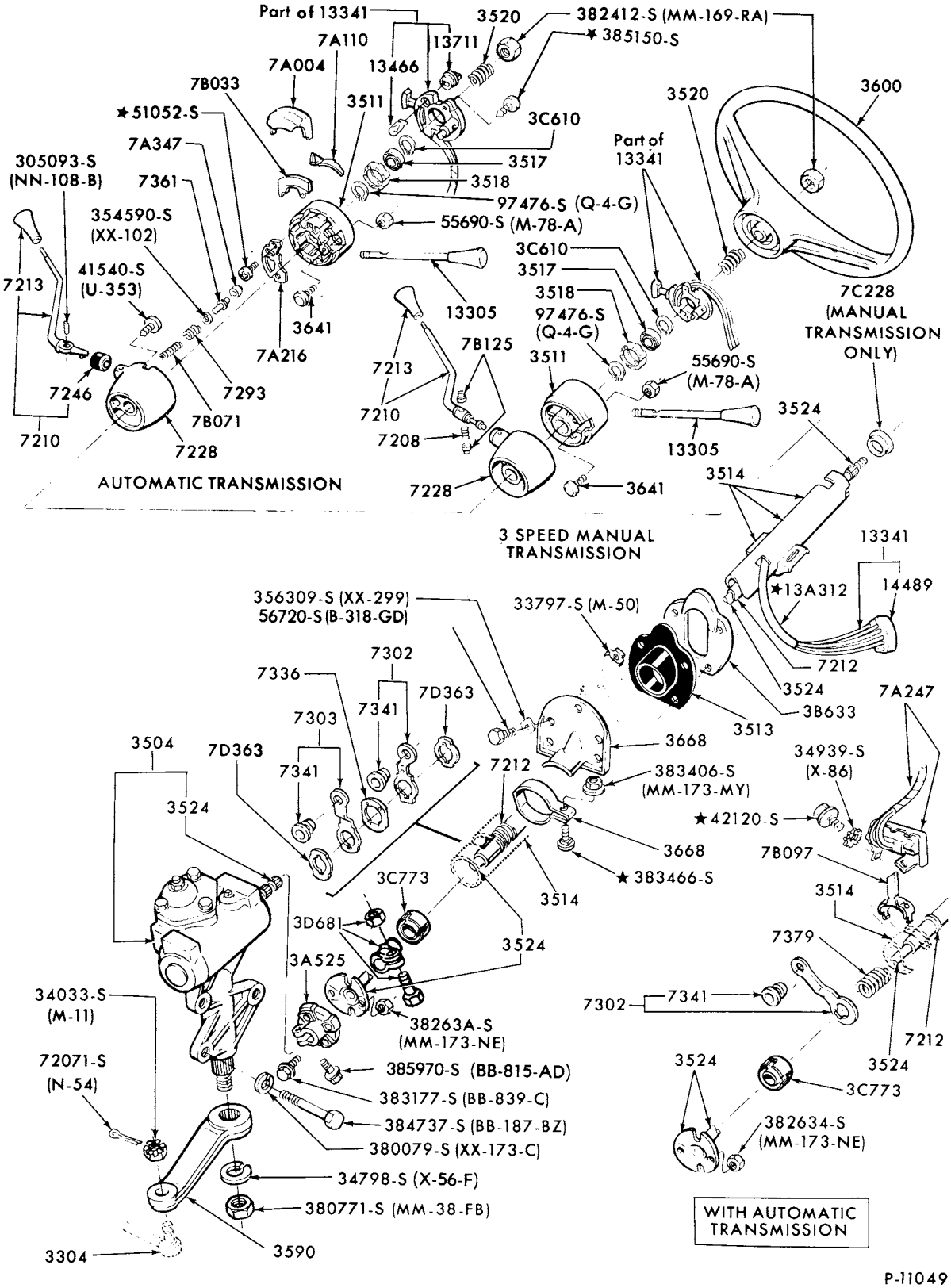

STEERING COLUMN with COLUMN SHIFT TRANSMISSION CONTROLS
1974/77 F100/350--2/W/D

COPYRIGHT © 1979 FORD MOTOR COMPANY, DEARBORN, MICHIGAN

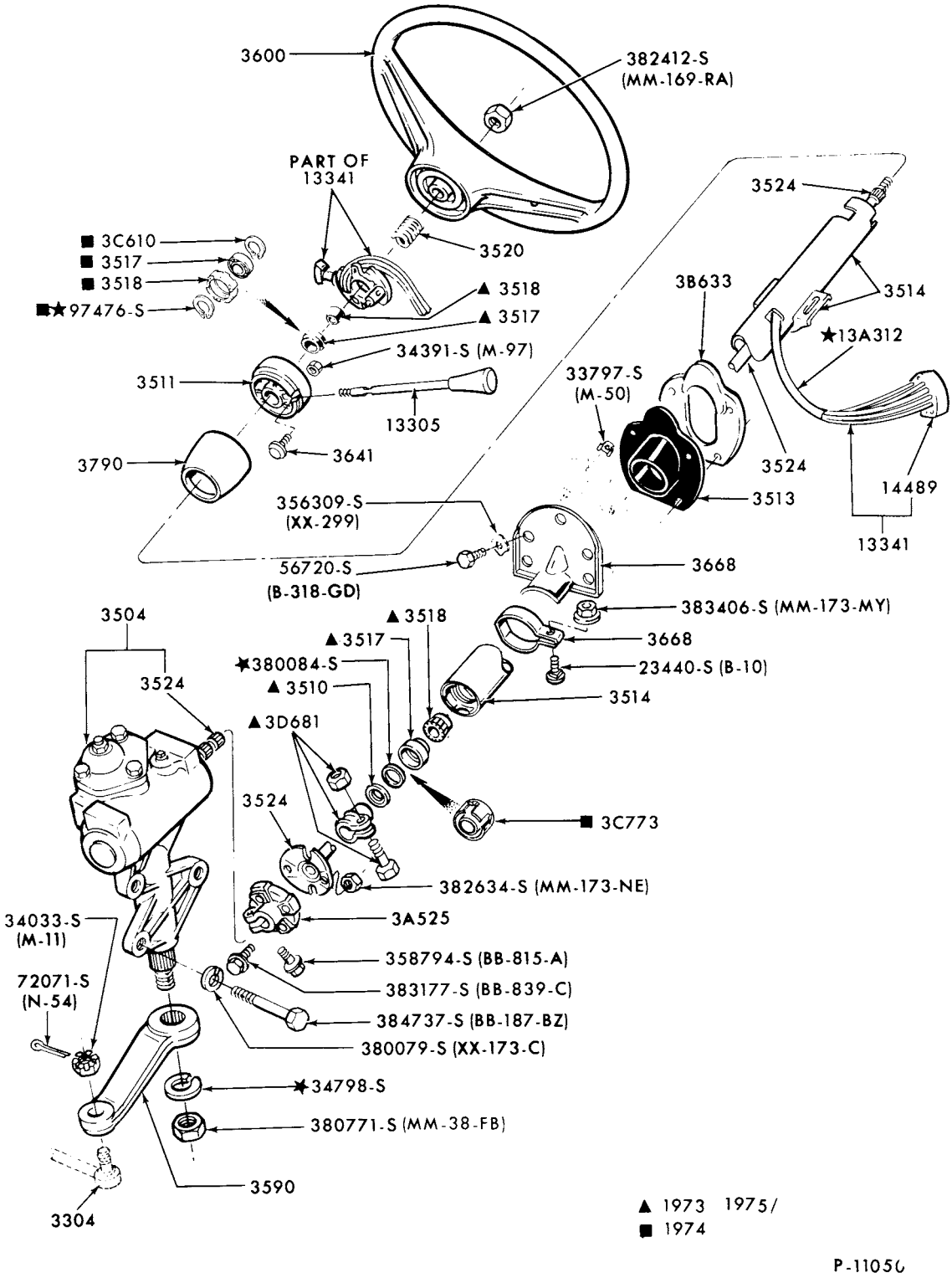

STEERING COLUMN with 4/M/T
1973/77 F100/350--2/W/D

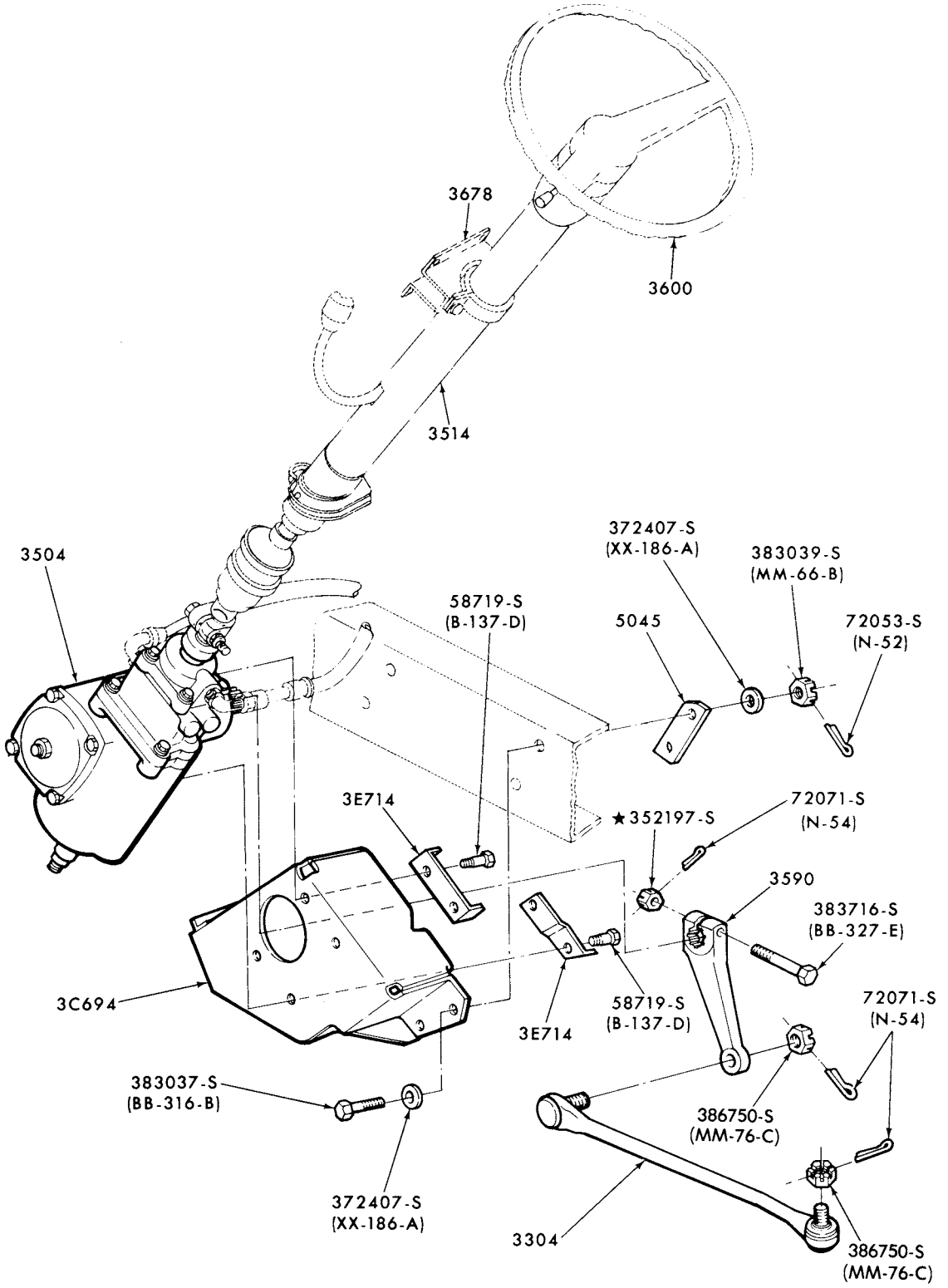

POWER STEERING GEAR INSTALLATION
1973/76 M450/500

COPYRIGHT © 1979 FORD MOTOR COMPANY DEARBORN, MICHIGAN

1973/79 TRUCK SERIES 100/500

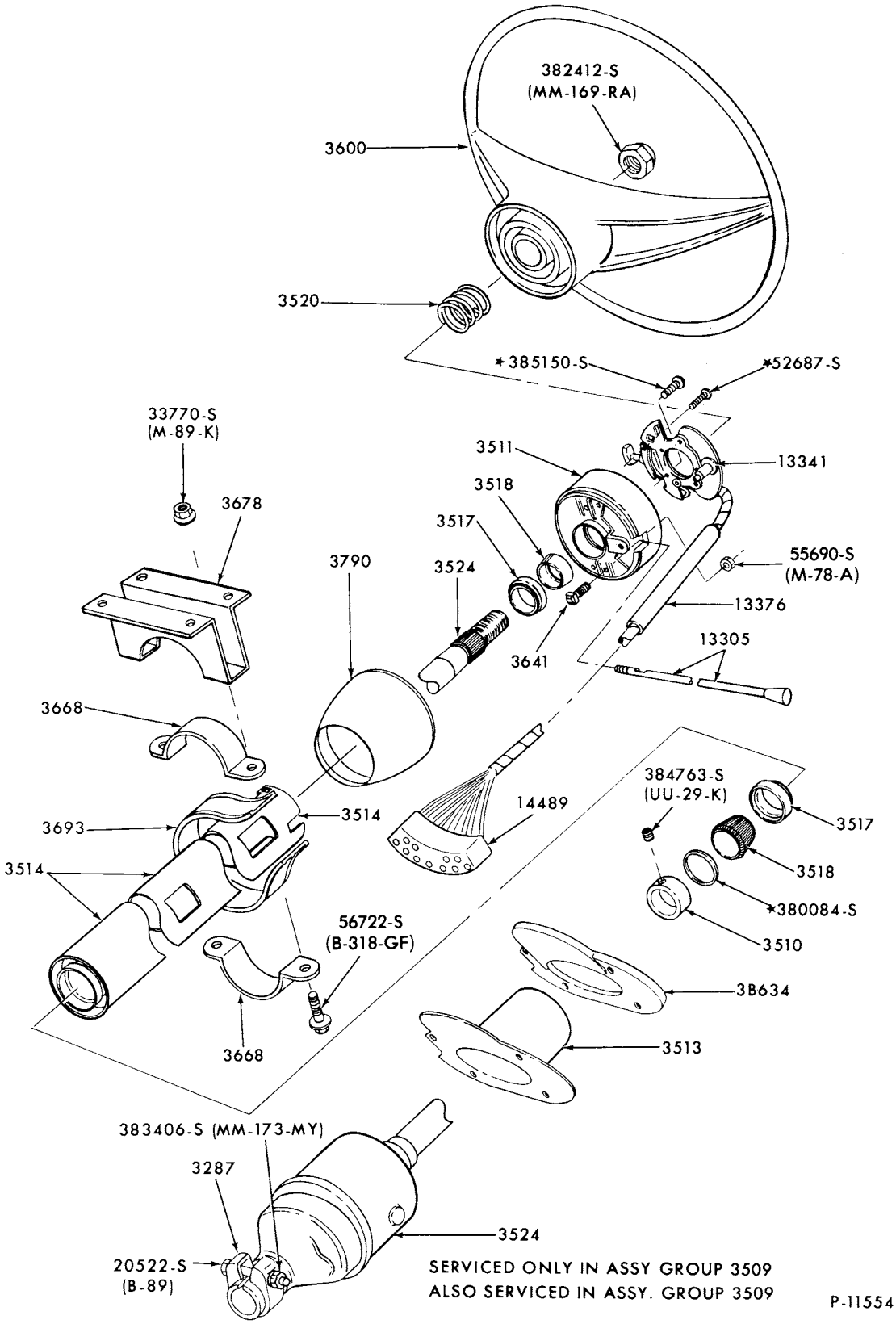

STEERING COLUMN--FIXED WHEEL
1973/76 M450/500

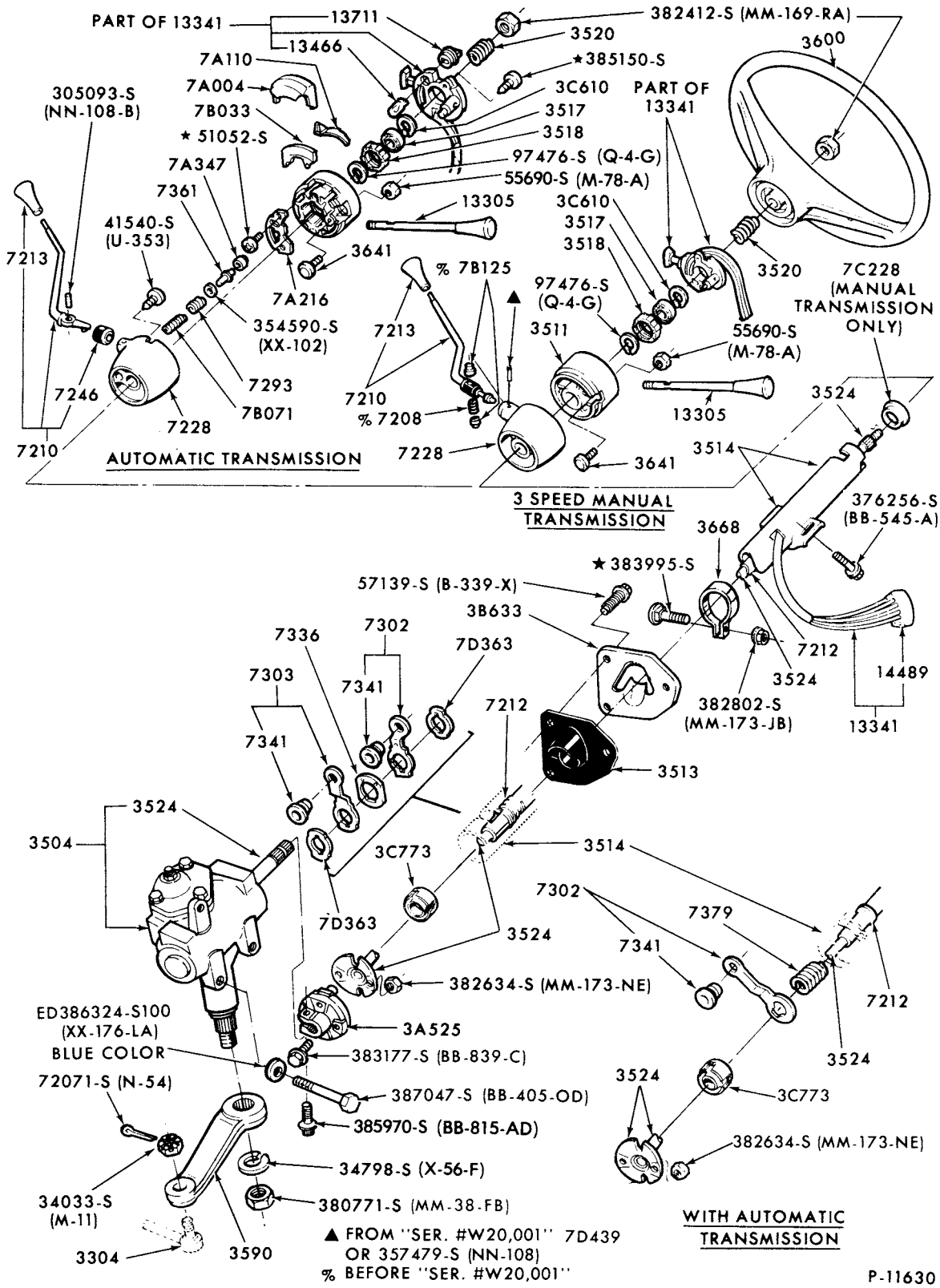

STEERING COLUMN
1975/77 E100/350

COPYRIGHT © 1980 FORD MOTOR COMPANY DEARBORN, MICHIGAN

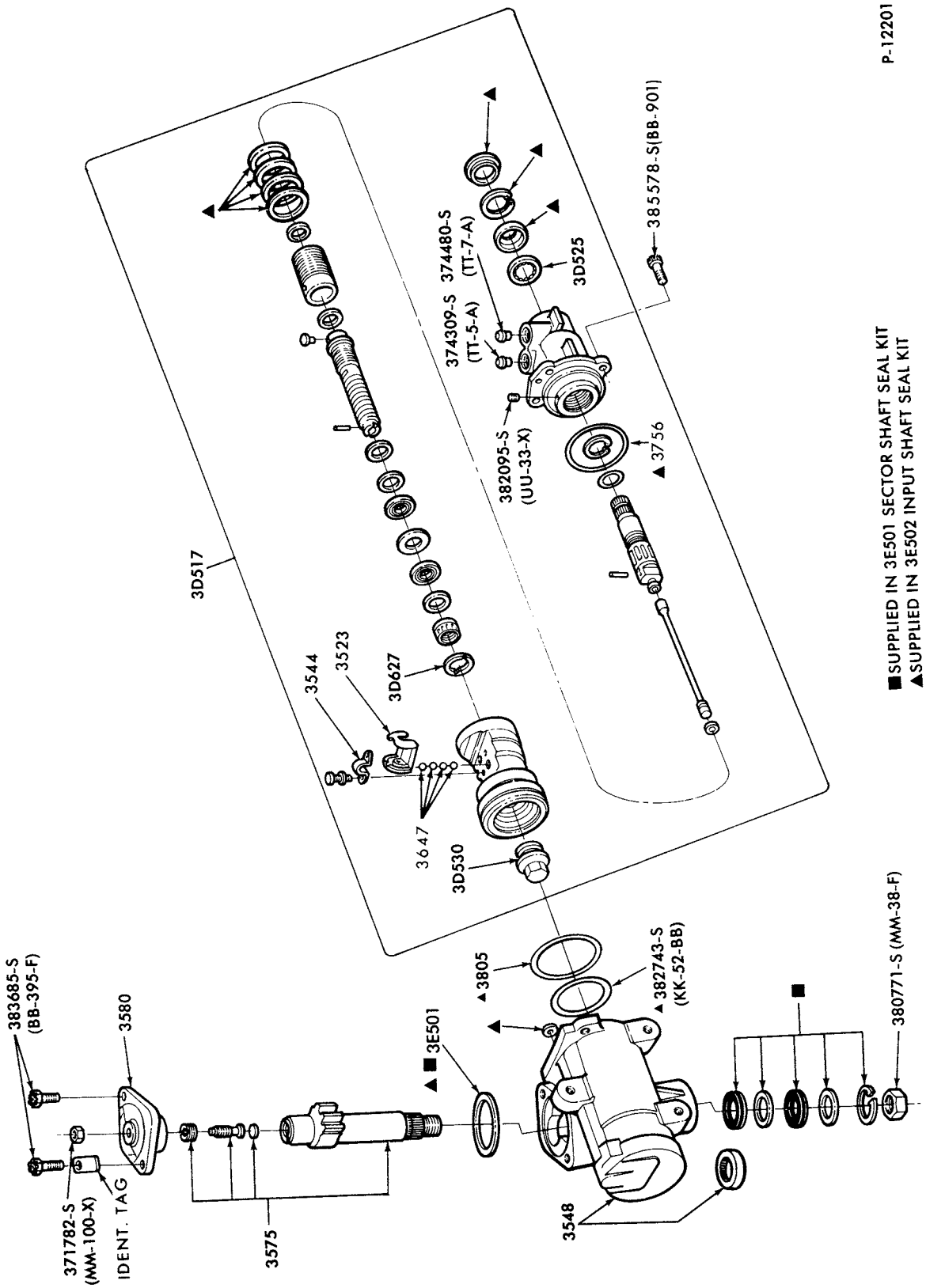

POWER STEERING GEAR ASSY.-FORD DESIGN (ROTARY VALVE TYPE)
1974/ F100/350

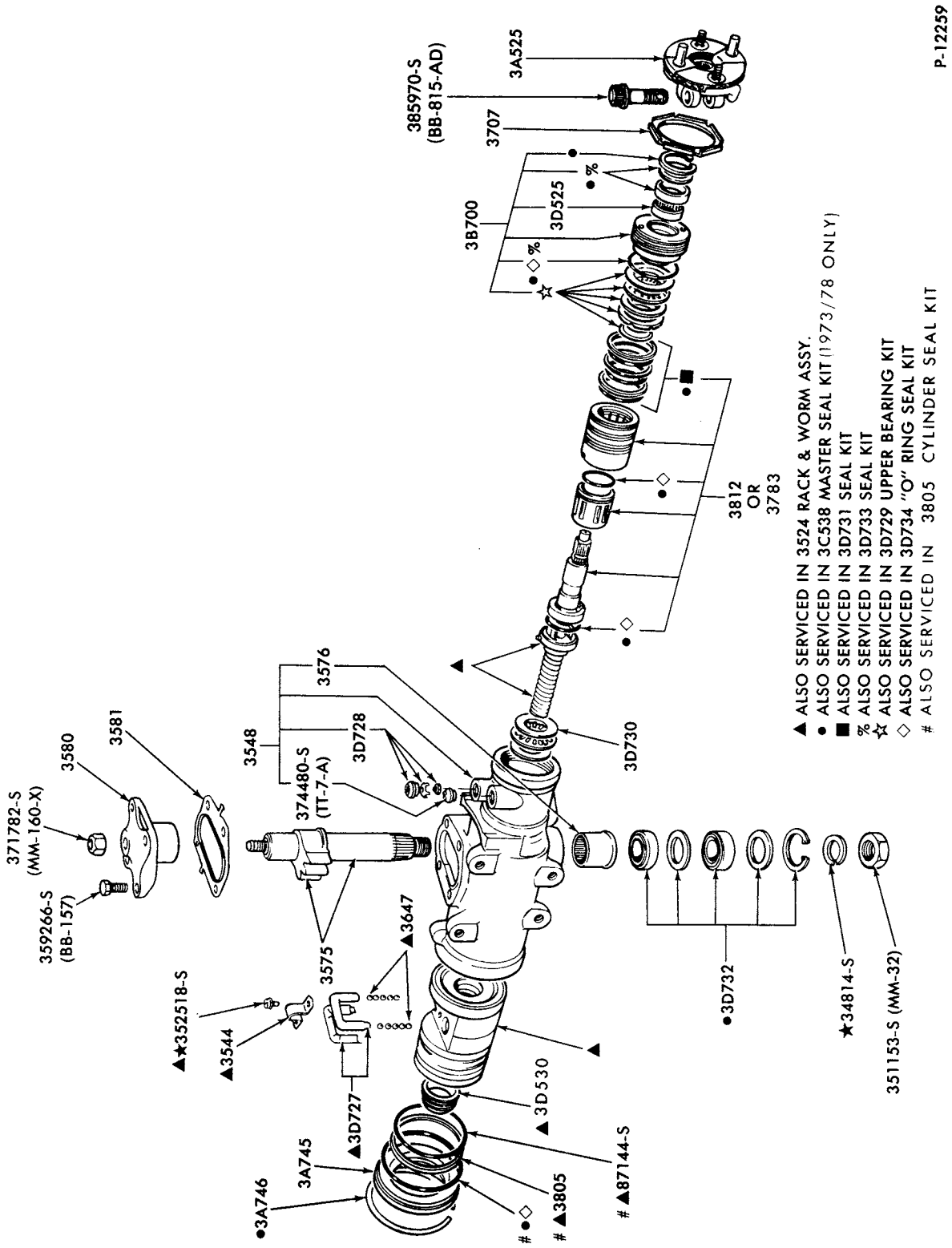

POWER STEERING GEAR ASSY.-SAGINAW DESIGN
1975/ E100/350

COPYRIGHT © 1980 FORD MOTOR COMPANY DEARBORN, MICHIGAN

1973/79
TRUCK SERIES 100/500

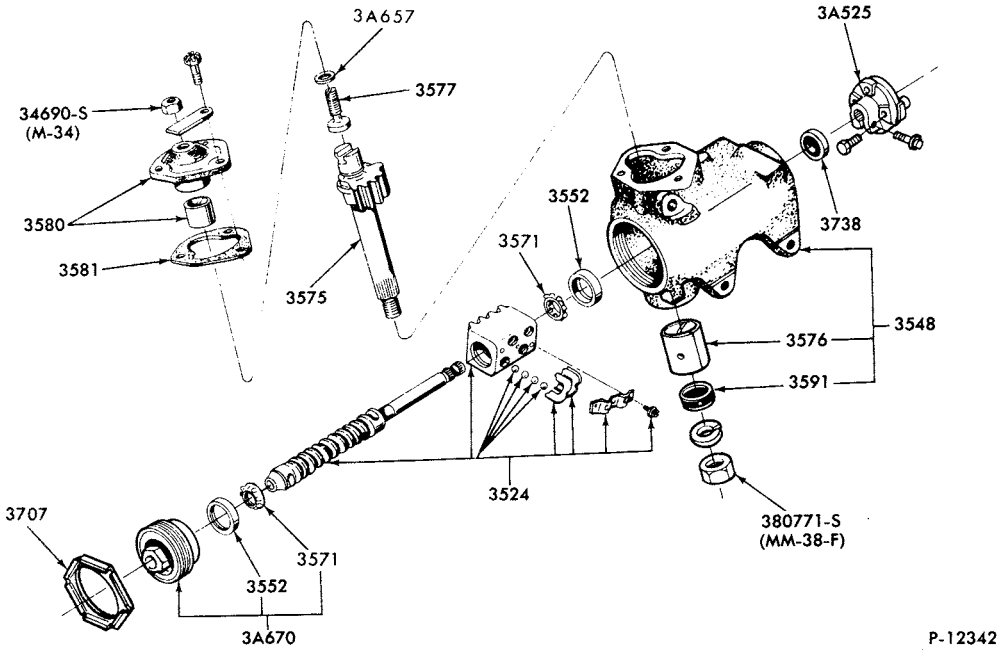

MANUAL STEERING GEAR ASSY.
1975/ E100/350

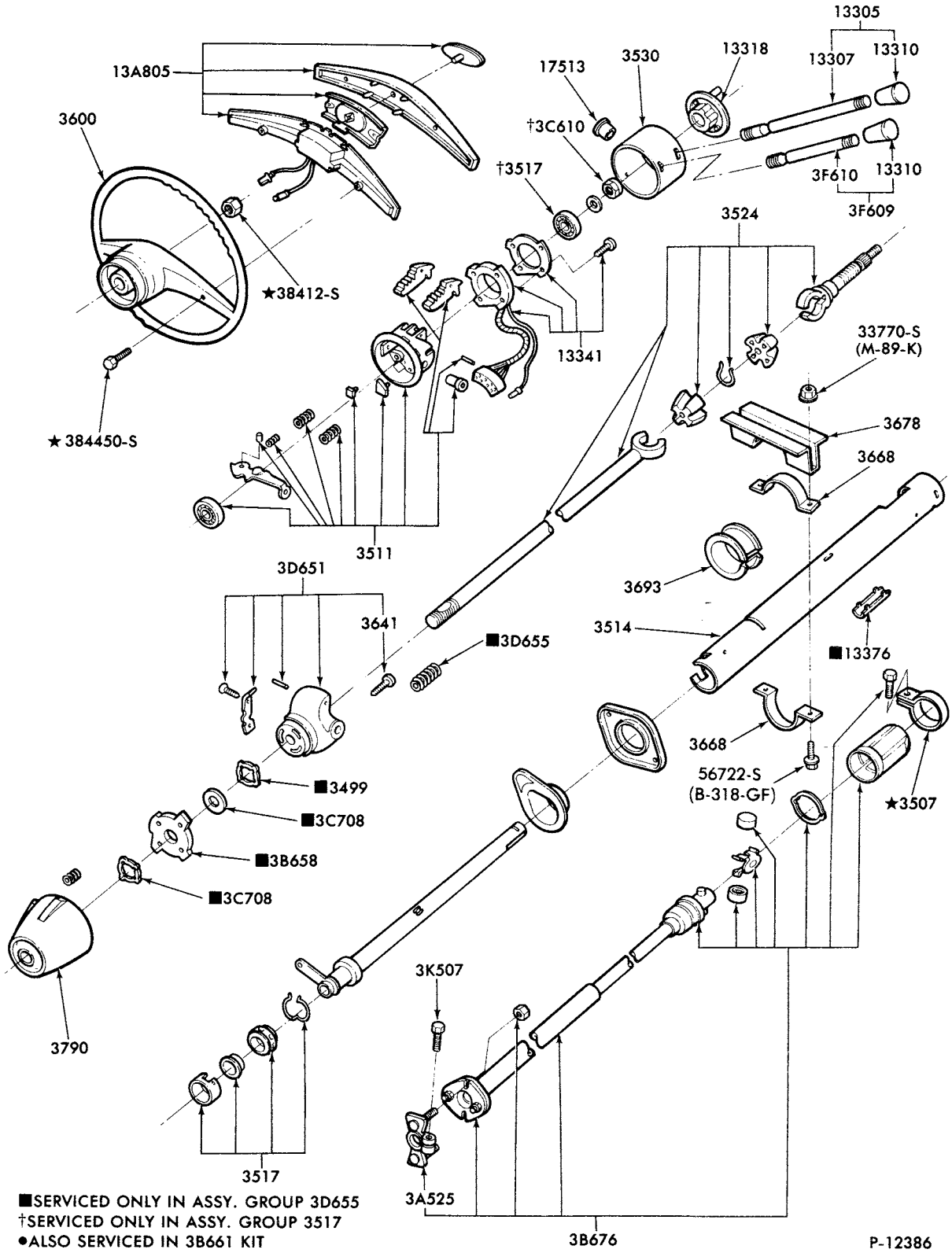

■SERVICED ONLY IN ASSY. GROUP 3D655
†SERVICED ONLY IN ASSY. GROUP 3517
•ALSO SERVICED IN 3B661 KIT

STEERING COLUMN--TILT WHEEL
1974/76 M450/500

COPYRIGHT © 1980— FORD MOTOR COMPANY —DEARBORN, MICHIGAN

1973/79
TRUCK SERIES 100/500

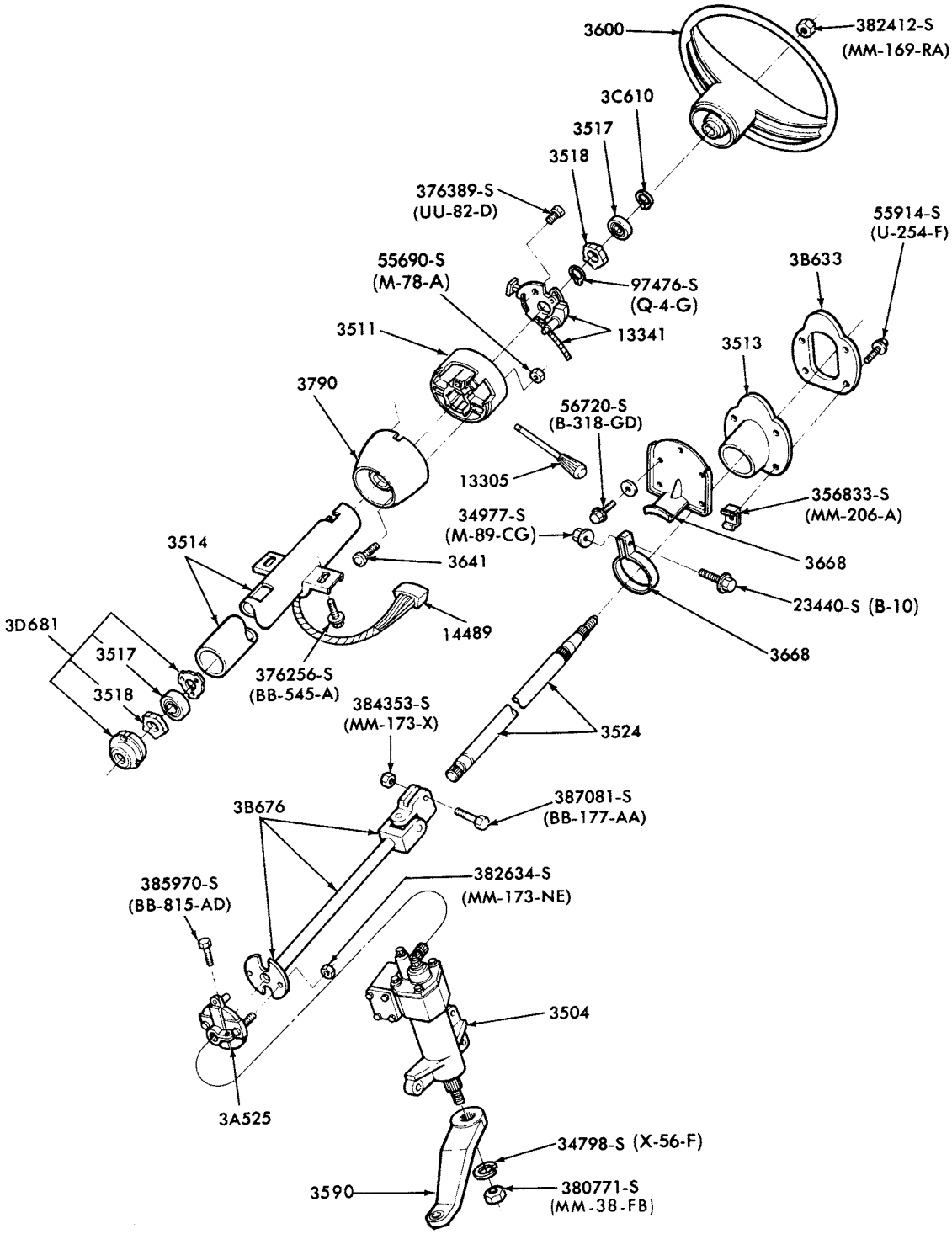

P-12974

STEERING COLUMN with 4/M/T
1976/77 F100/150--4/W/D

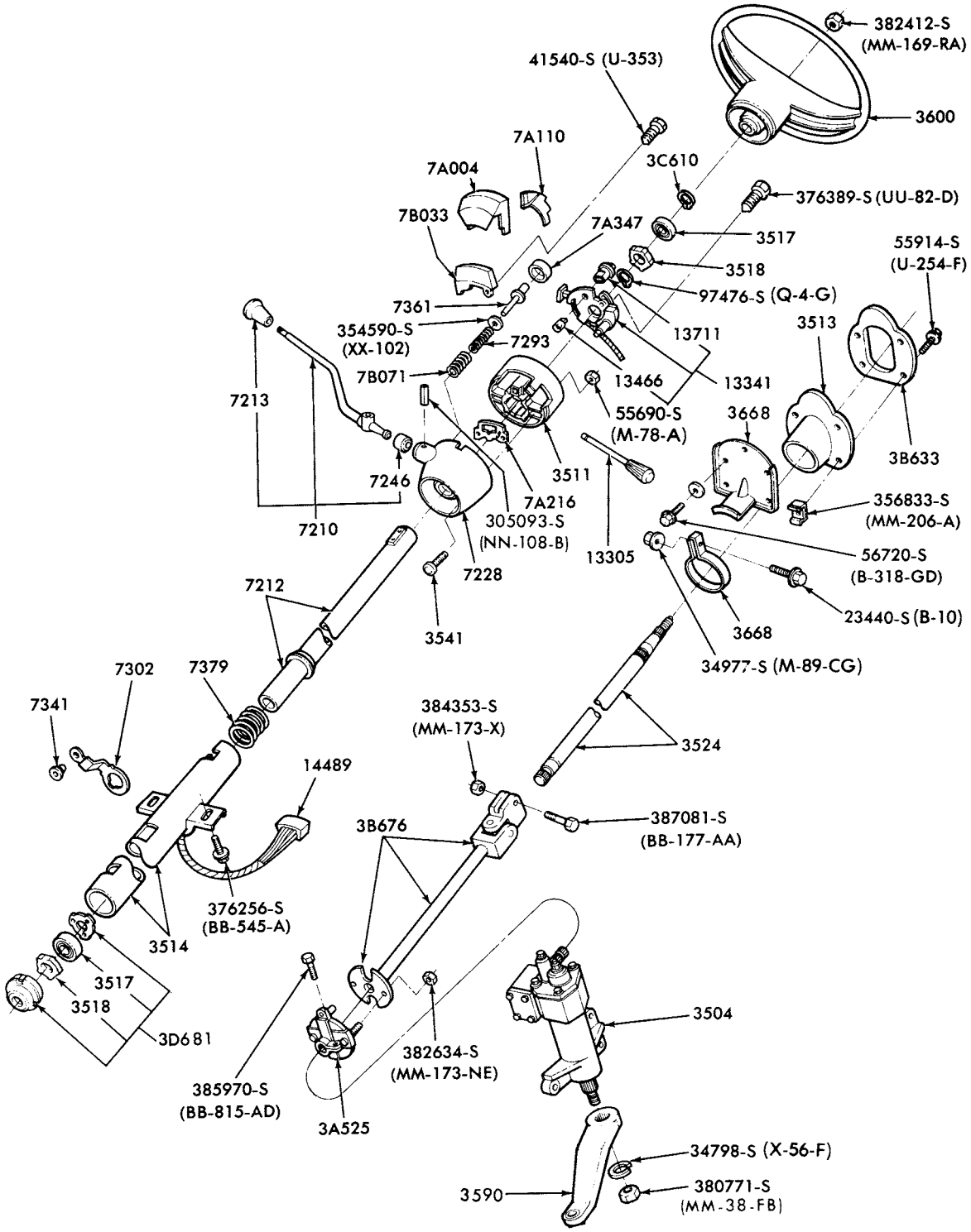

P-12975

STEERING COLUMN and RELATED PARTS
1976/77 F100/250--4/W/D with A/T

COPYRIGHT © 1980— FORD MOTOR COMPANY —DEARBORN, MICHIGAN

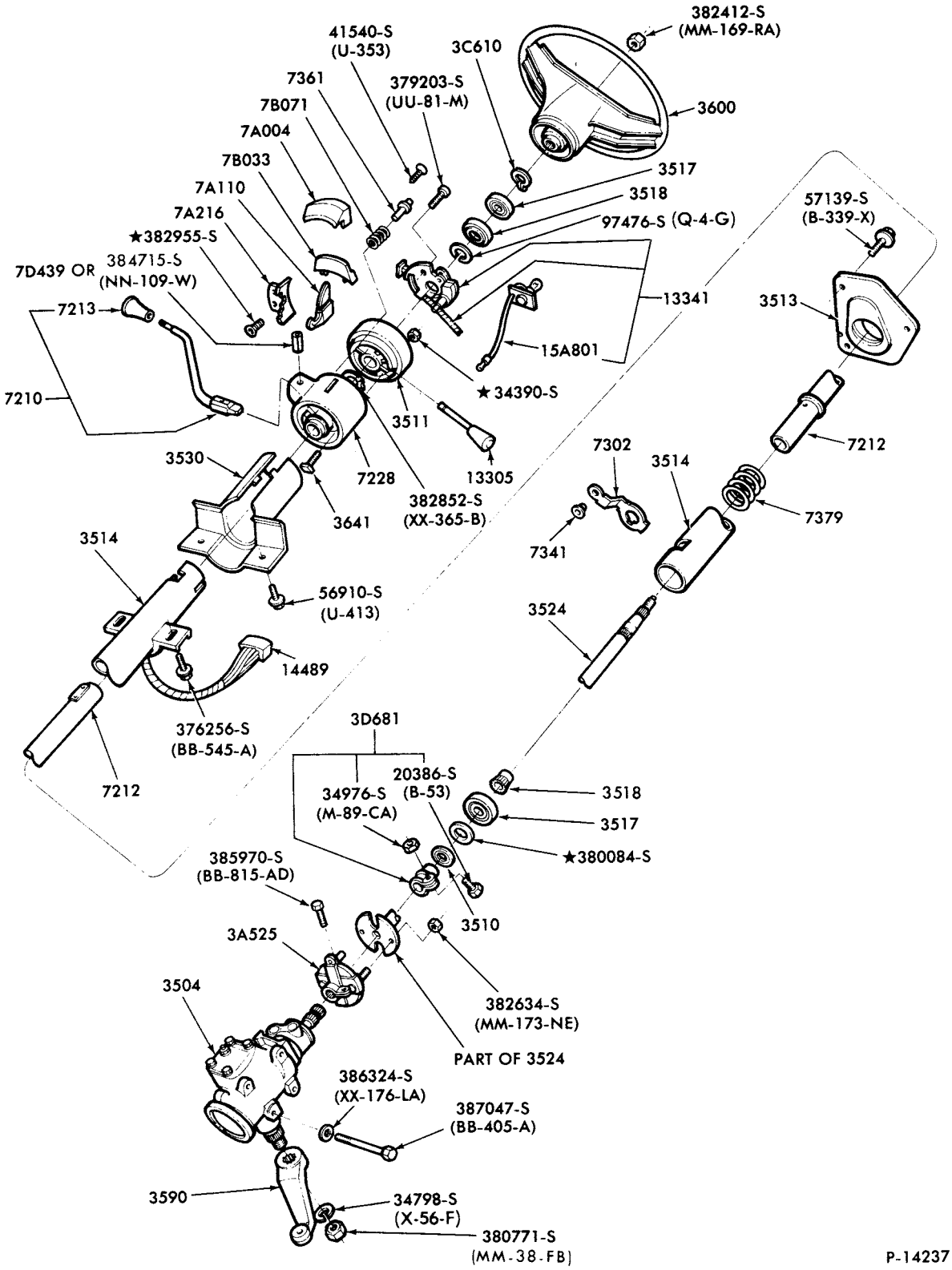

STEERING COLUMN with A/T - FIXED WHEEL
1978/ E100/350

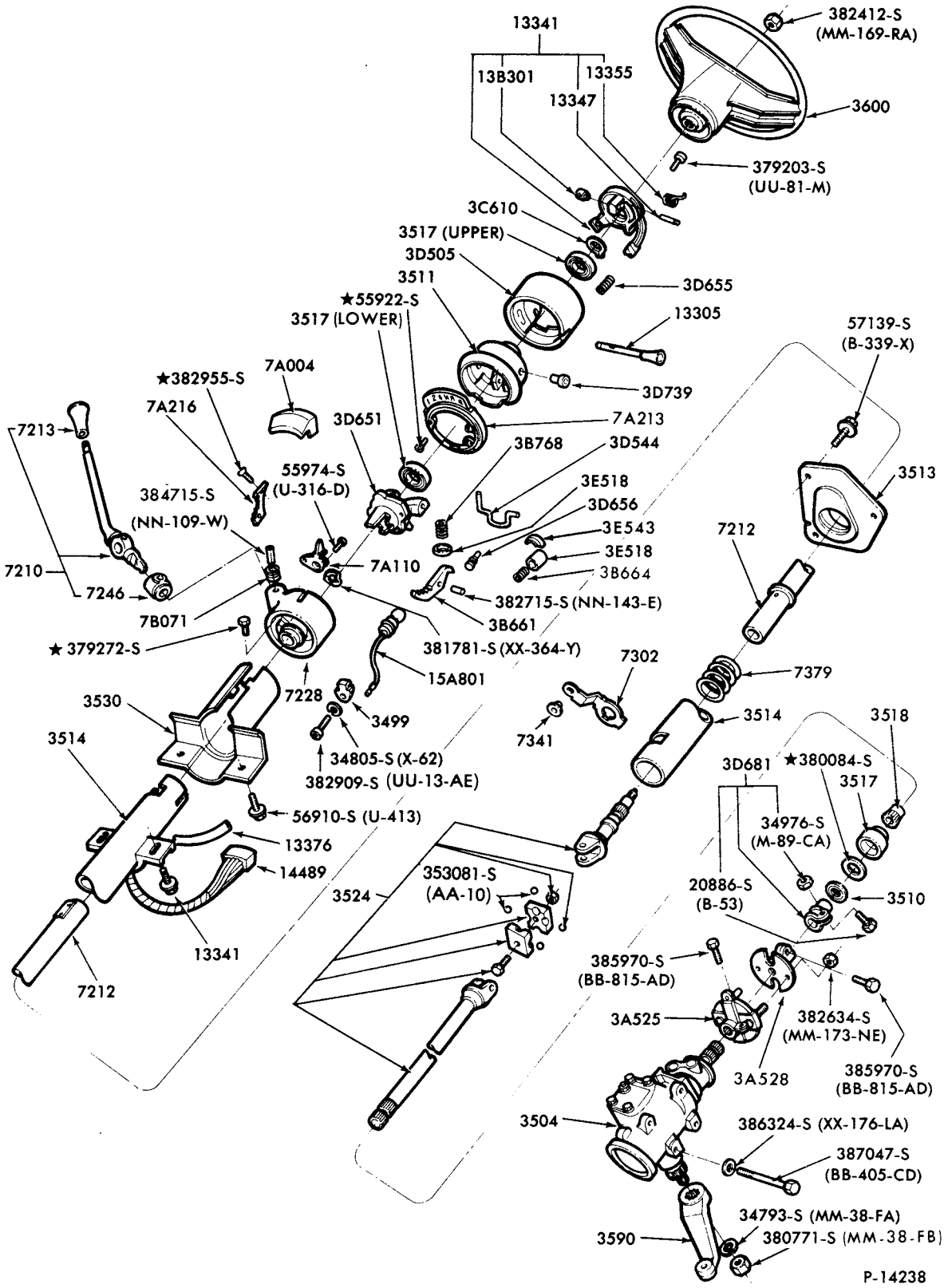

STEERING COLUMN with A/T - TILT WHEEL
1978/ E100/350

COPYRIGHT © 1980 FORD MOTOR-DEARBORN, MICHIGAN COMPANY

1973/79 TRUCK SERIES 100/500

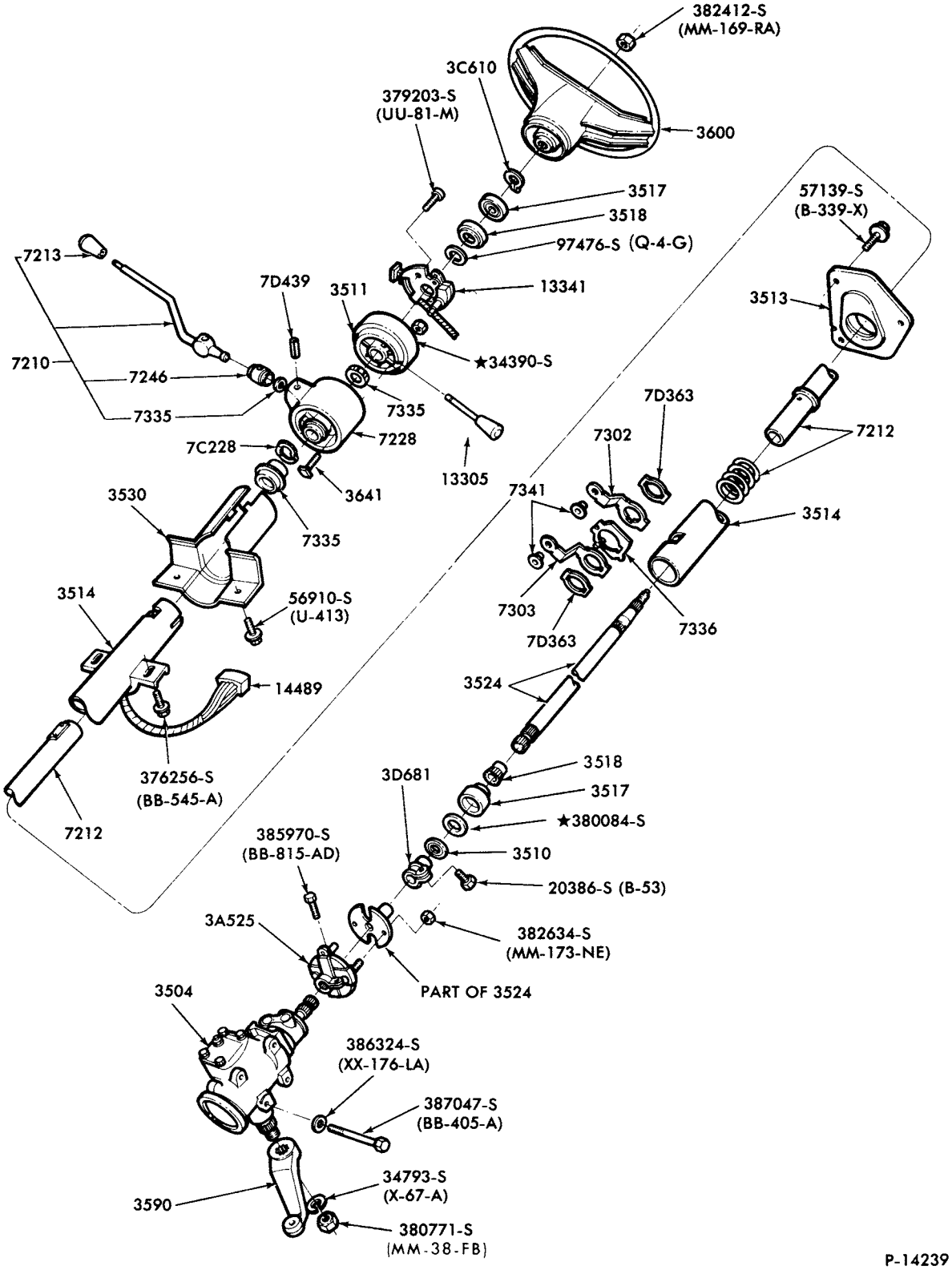

STEERING COLUMN with 3/M/T
1978/ E100/350

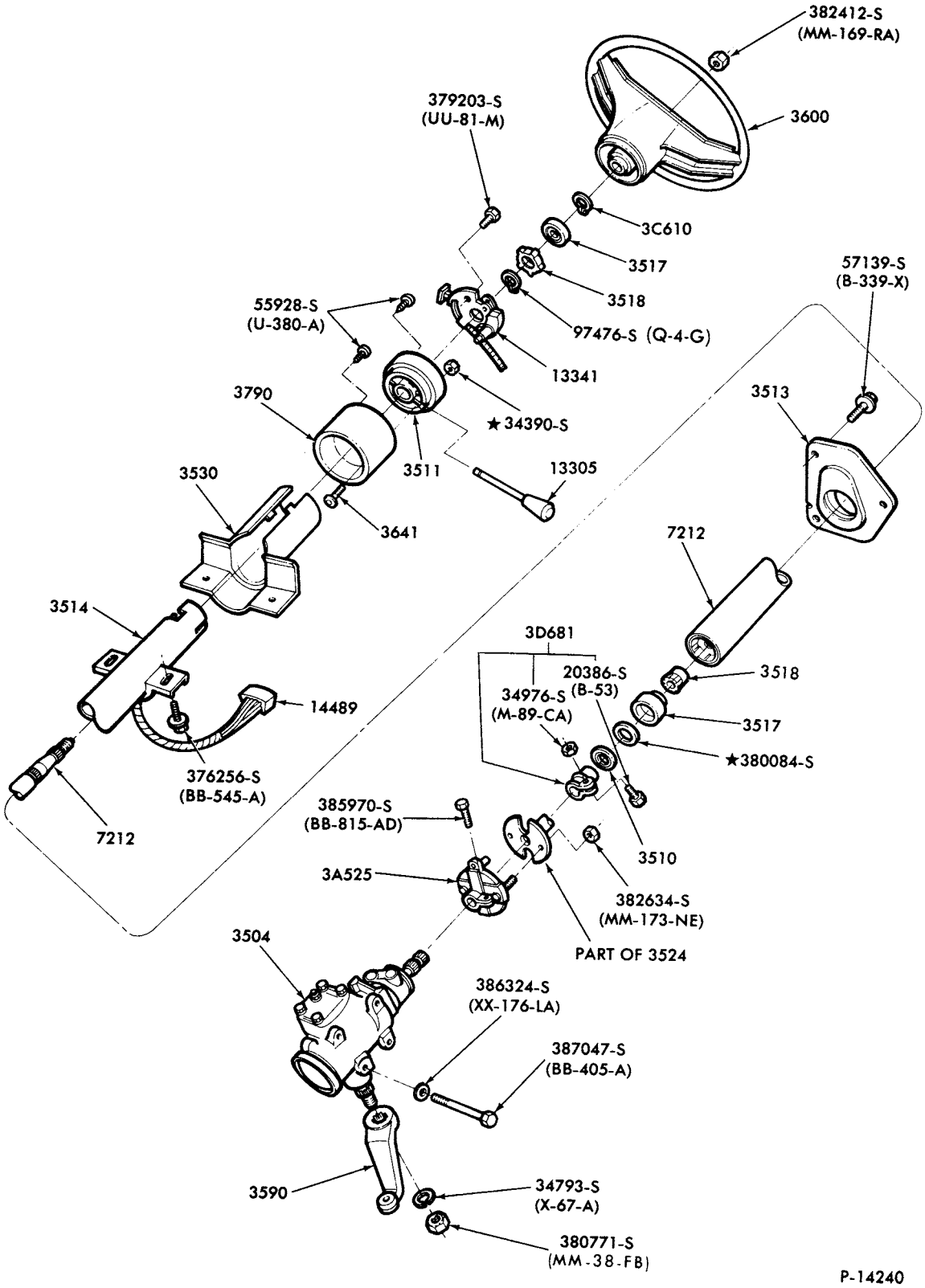

STEERING COLUMN with 4/M/T
1978/ E100/350

COPYRIGHT © 1980— FORD MOTOR COMPANY —DEARBORN, MICHIGAN

1973/79 TRUCK SERIES 100/500

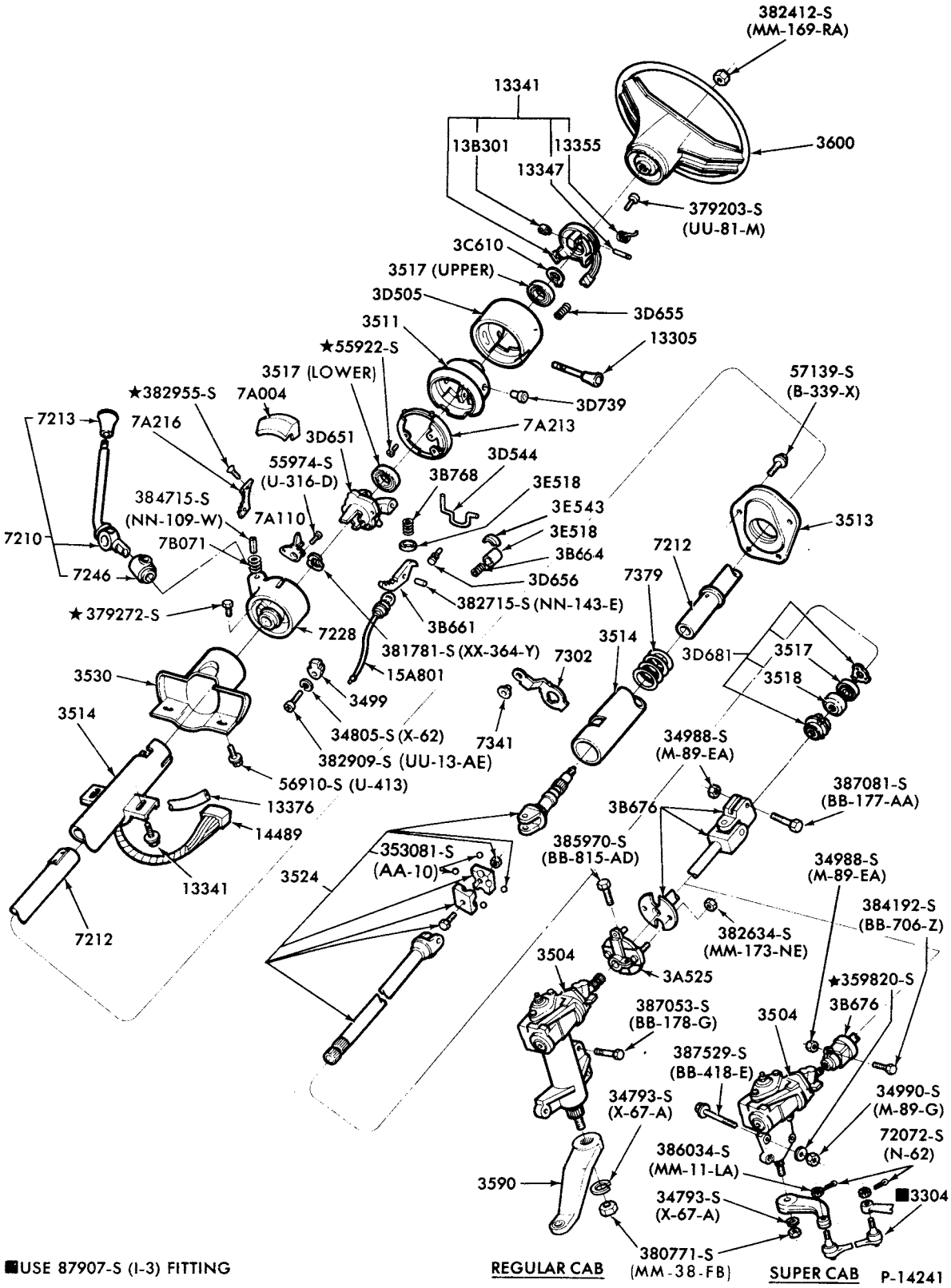

STEERING COLUMN with A/T - TILT WHEEL
1978/ F150/350--4/W/D

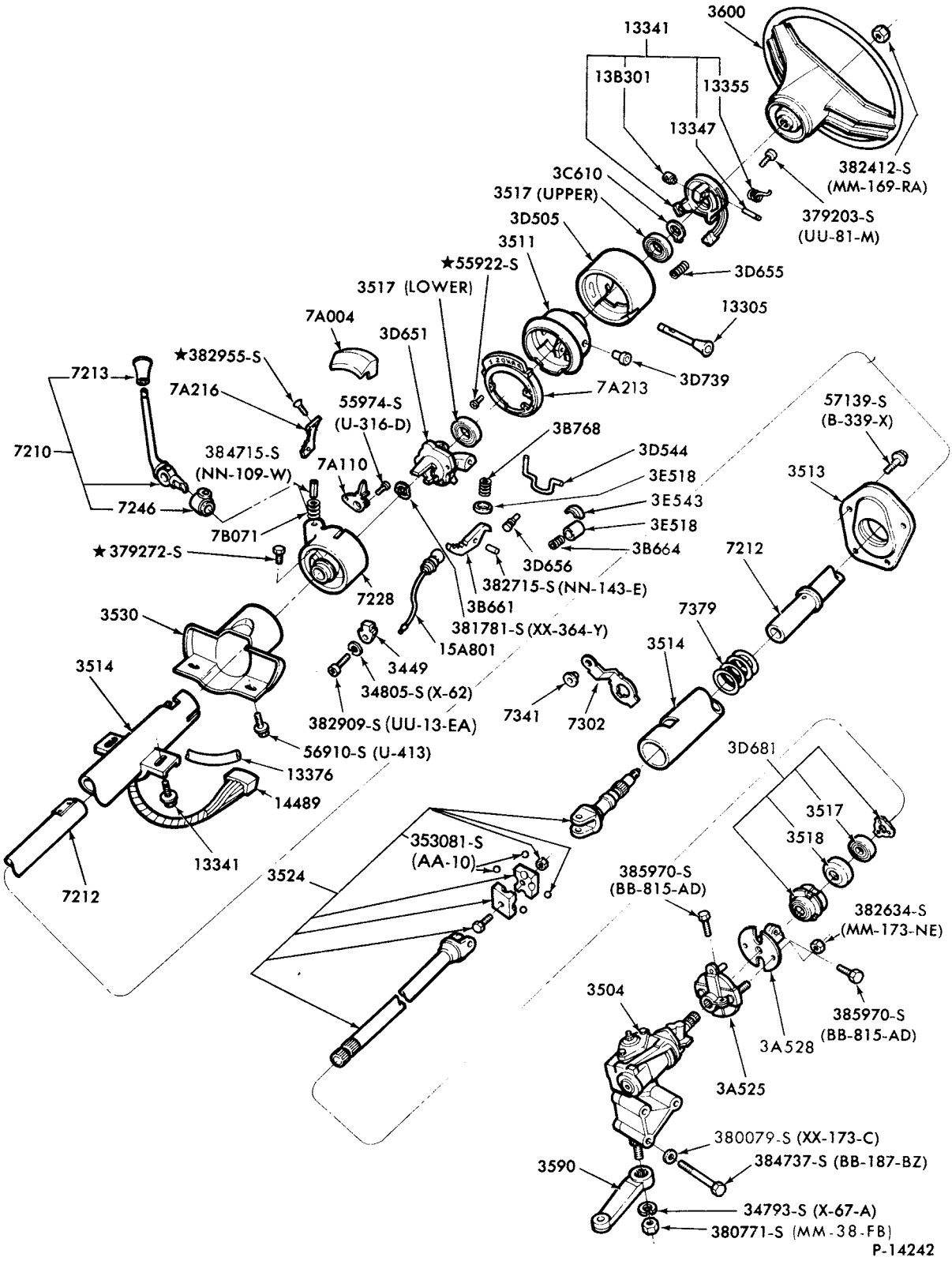

STEERING COLUMN with A/T - TILT WHEEL
1978/ F100/350--2/W/D

COPYRIGHT © 1980 FORD MOTOR-DEARBORN, MICHIGAN COMPANY

1973/79 TRUCK SERIES 100/500

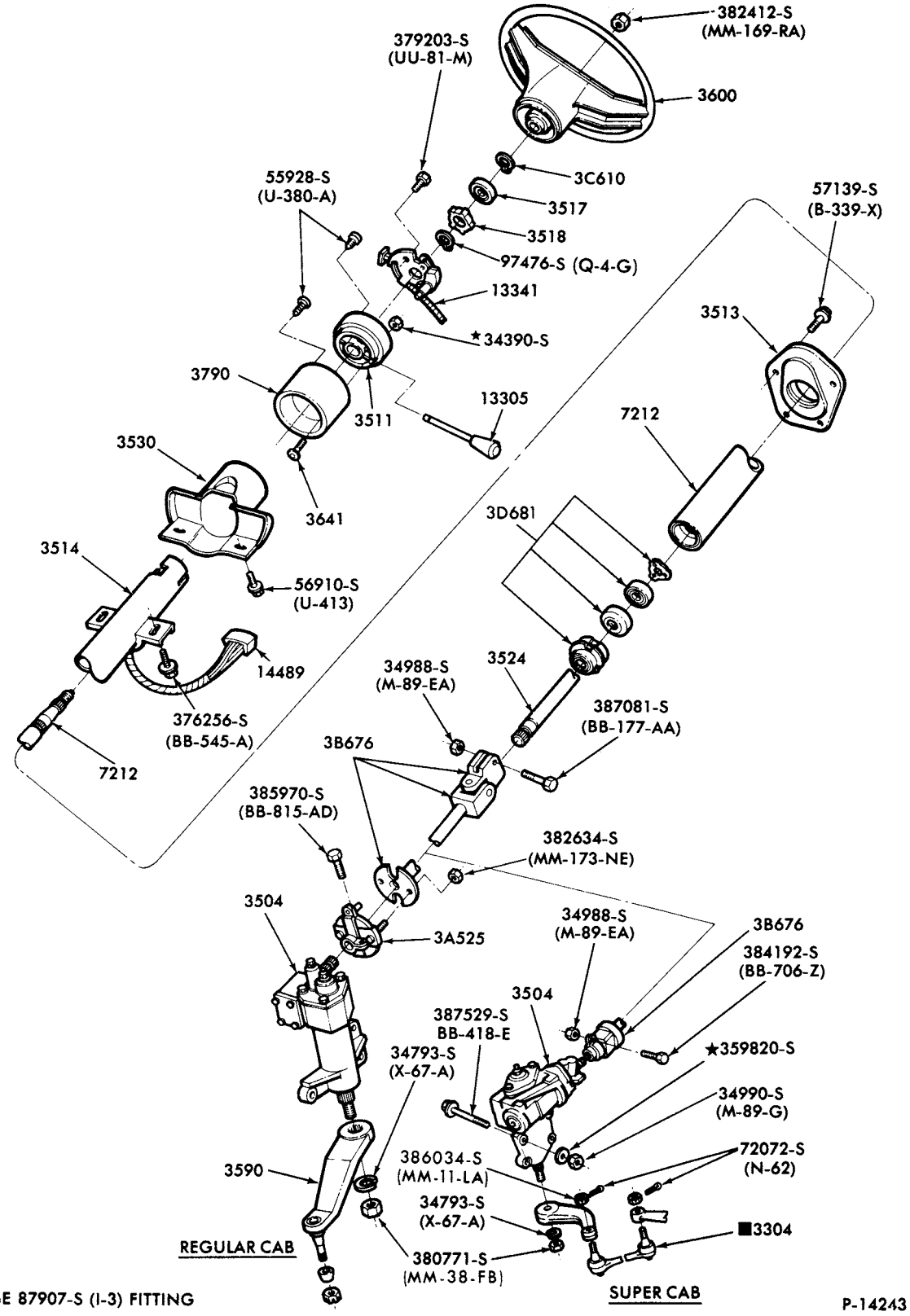

STEERING COLUMN with 4/M/T
1978/ F150/350--4/W/D

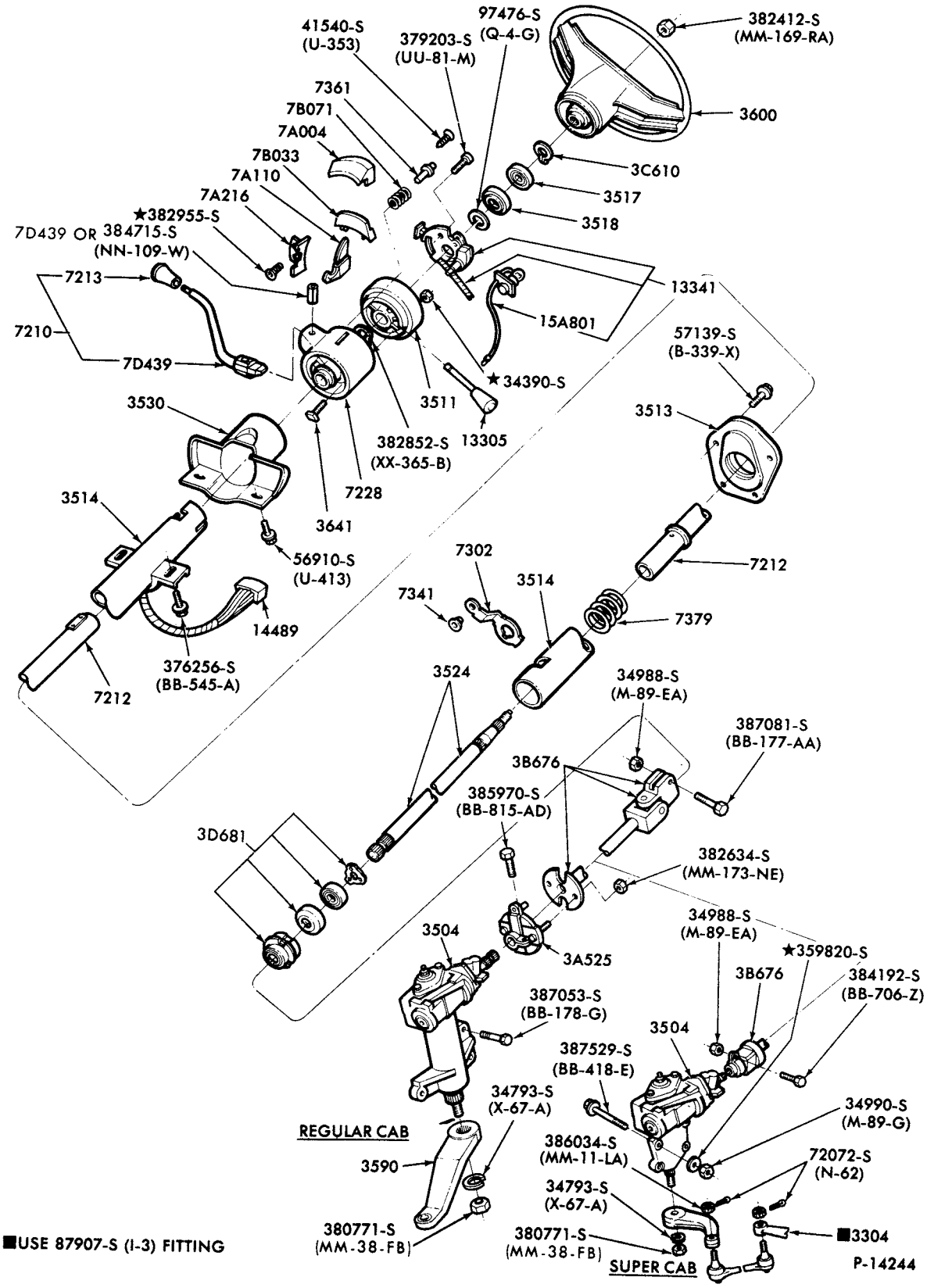

STEERING COLUMN with A/T - FIXED WHEEL
1978/ F100/350--4/W/D

COPYRIGHT © 1980— FORD MOTOR COMPANY —DEARBORN, MICHIGAN

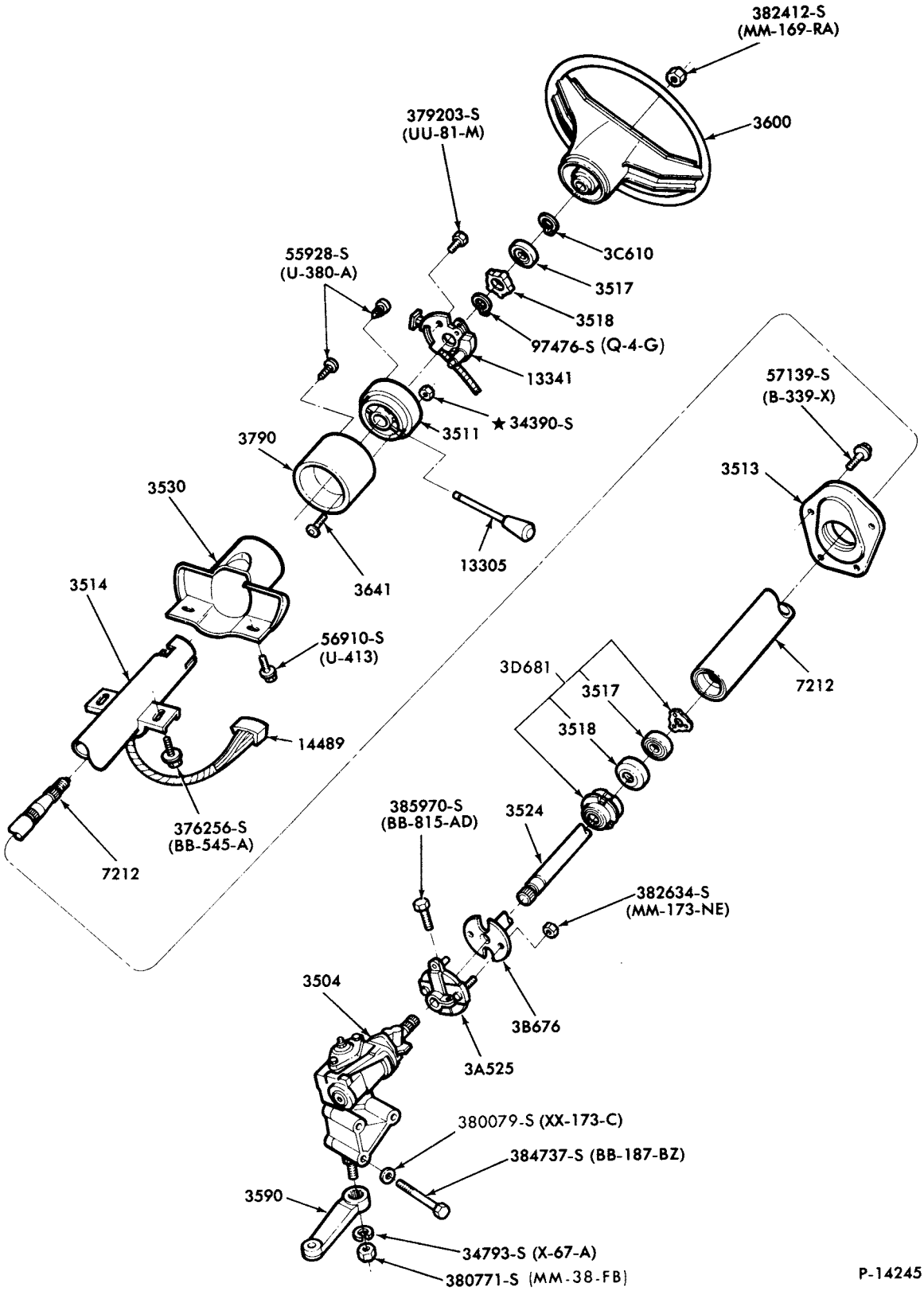

STEERING COLUMN with 4/M/T
1978/ F100/350--2/W/D

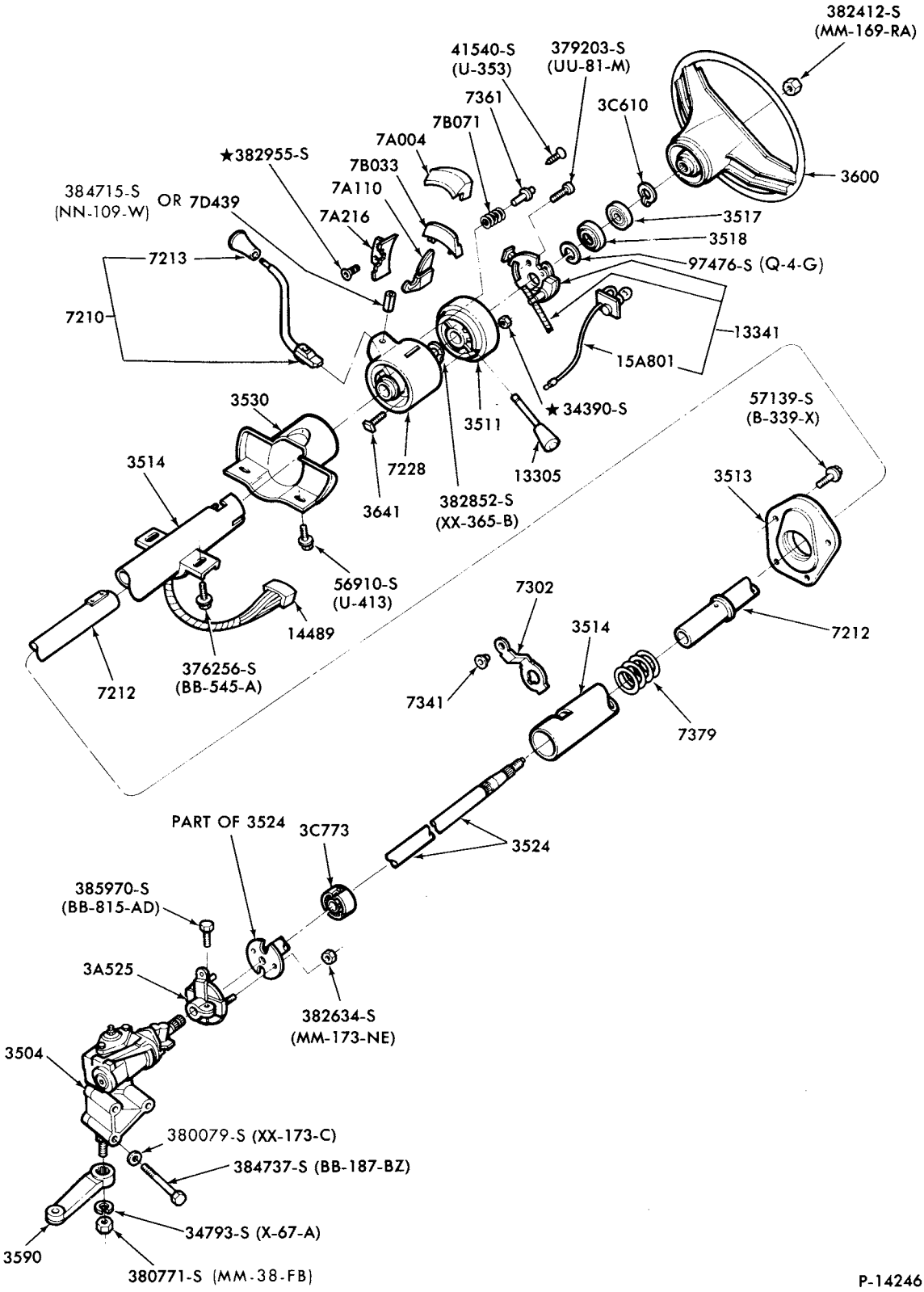

STEERING COLUMN with A/T - FIXED WHEEL
1978/ F100/350--2/W/D

COPYRIGHT © 1980— FORD MOTOR COMPANY —DEARBORN, MICHIGAN

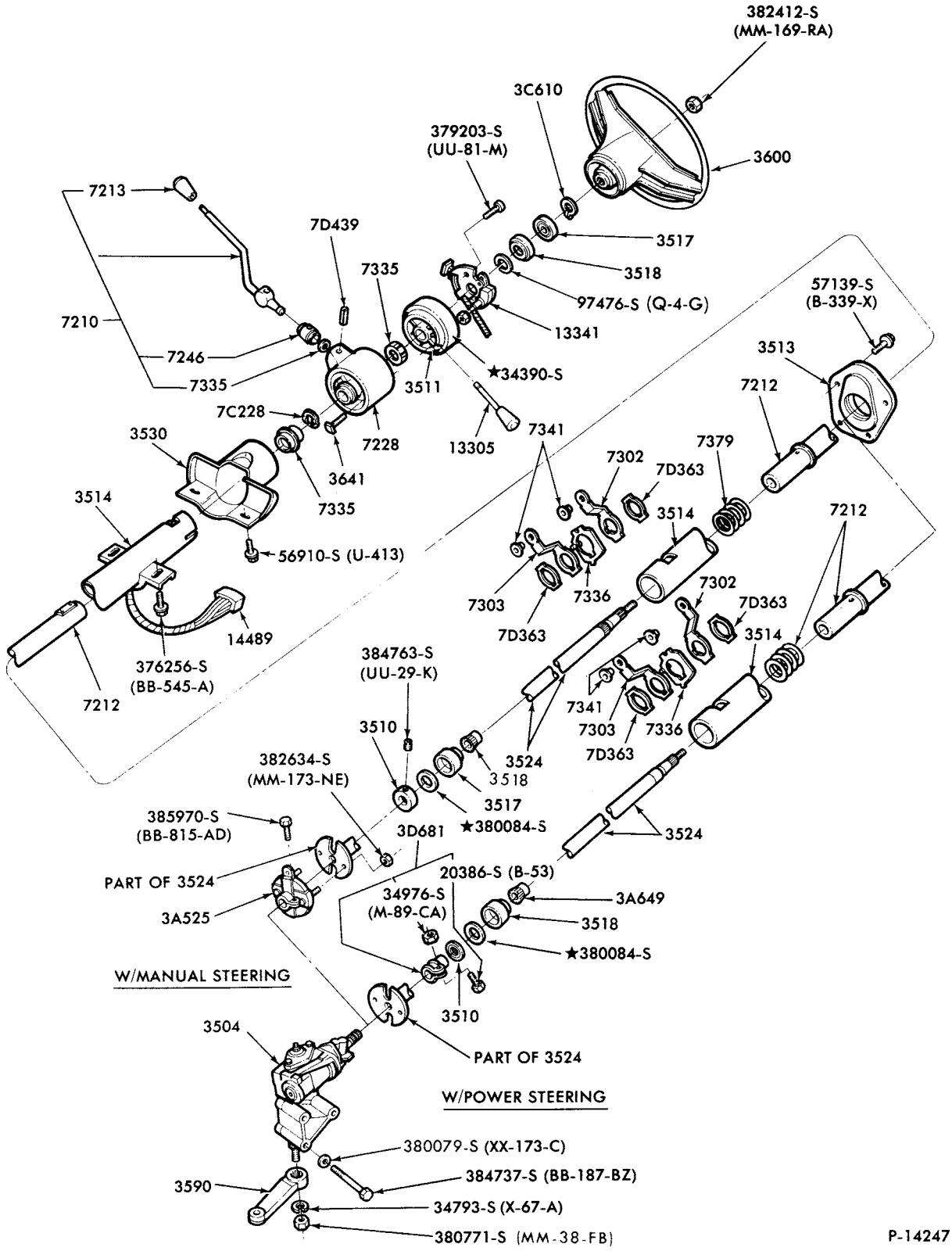

STEERING COLUMN with 3/M/T
1978/ F100/350--2/W/D

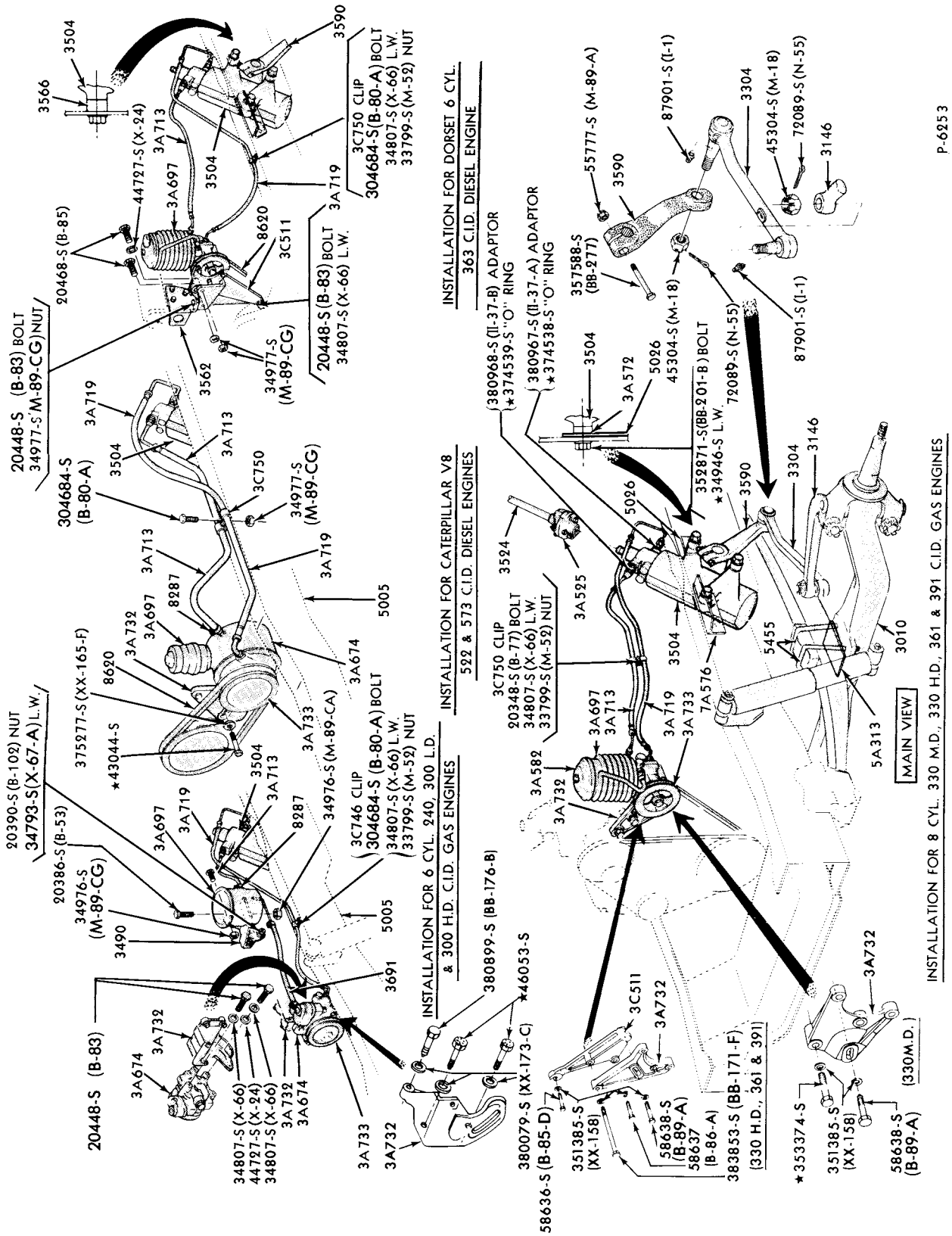

POWER STEERING HOSE and PUMP INSTALLATION
1973/77 B-F500

COPYRIGHT © 1979 - FORD MOTOR COMPANY - DEARBORN, MICHIGAN

1973/79 TRUCK SERIES 100/500

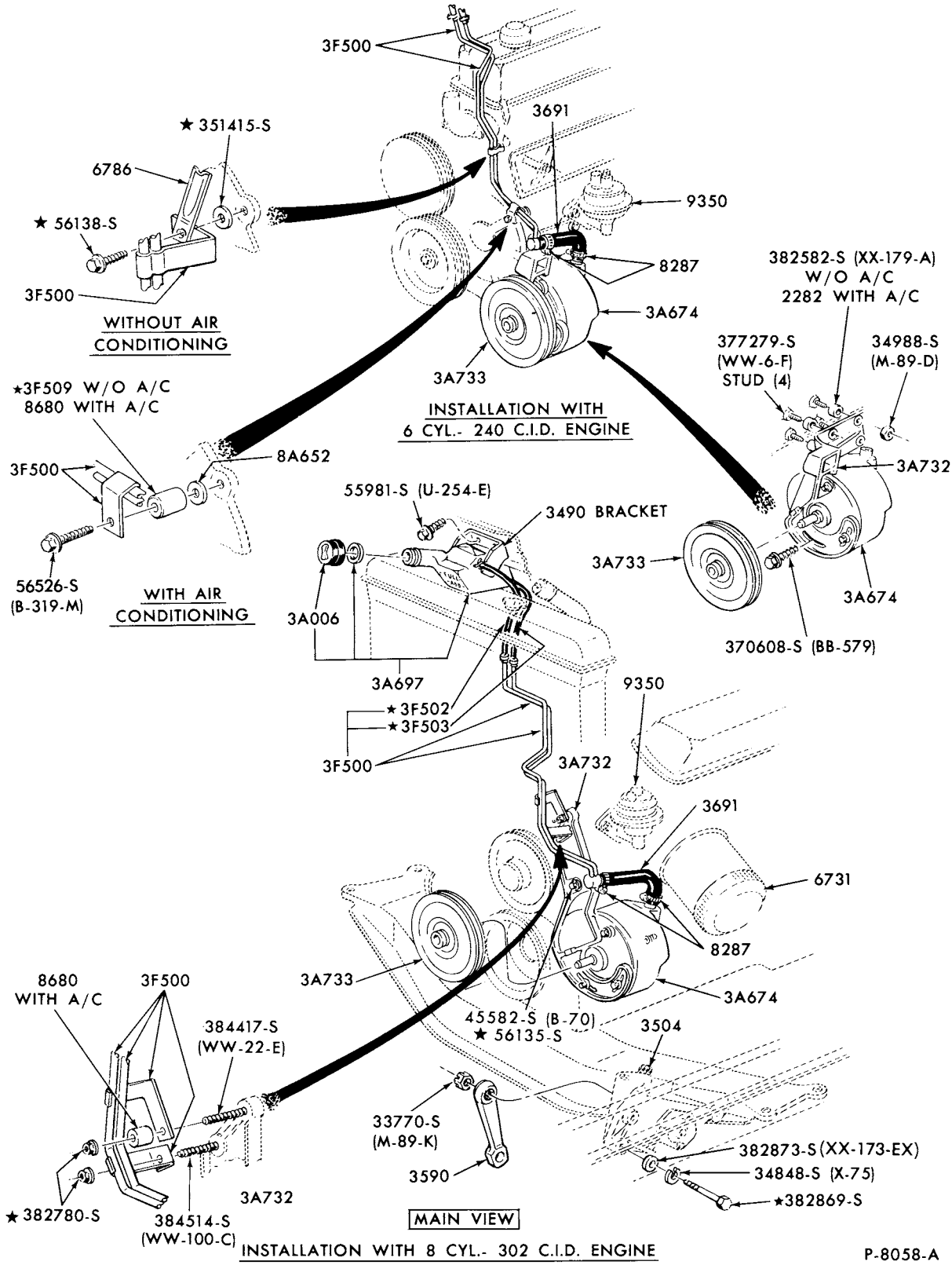

POWER STEERING HOSE and PUMP INSTALLATION

1973/74 E100/300

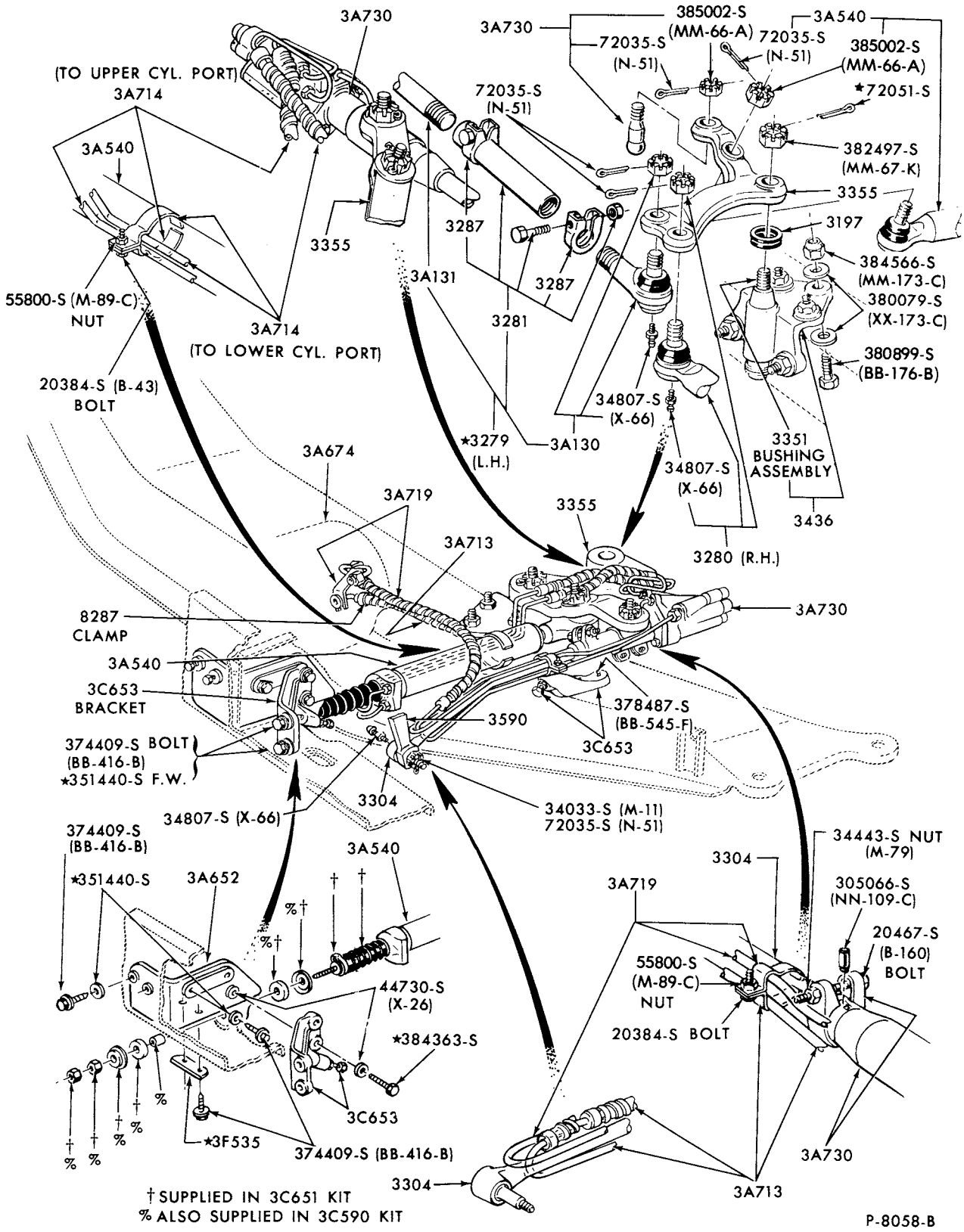

POWER STEERING SYSTEM - LINKAGE INSTALLATION and RELATED PARTS
1973/74 E100/300

COPYRIGHT © 1979 FORD MOTOR COMPANY—DEARBORN, MICHIGAN

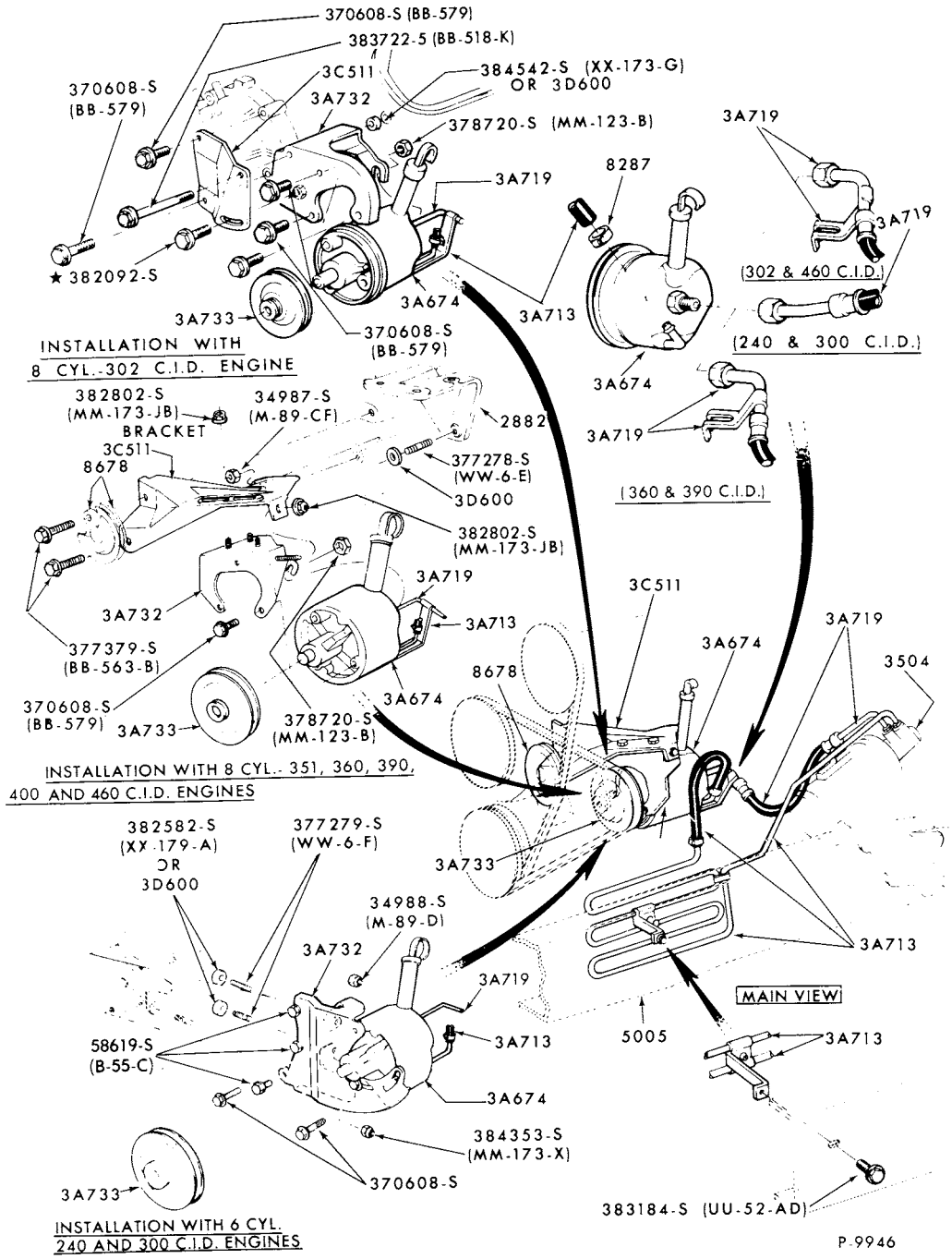

POWER STEERING HOSE and PUMP INSTALLATION

1973/77 F100/350--2/W/D

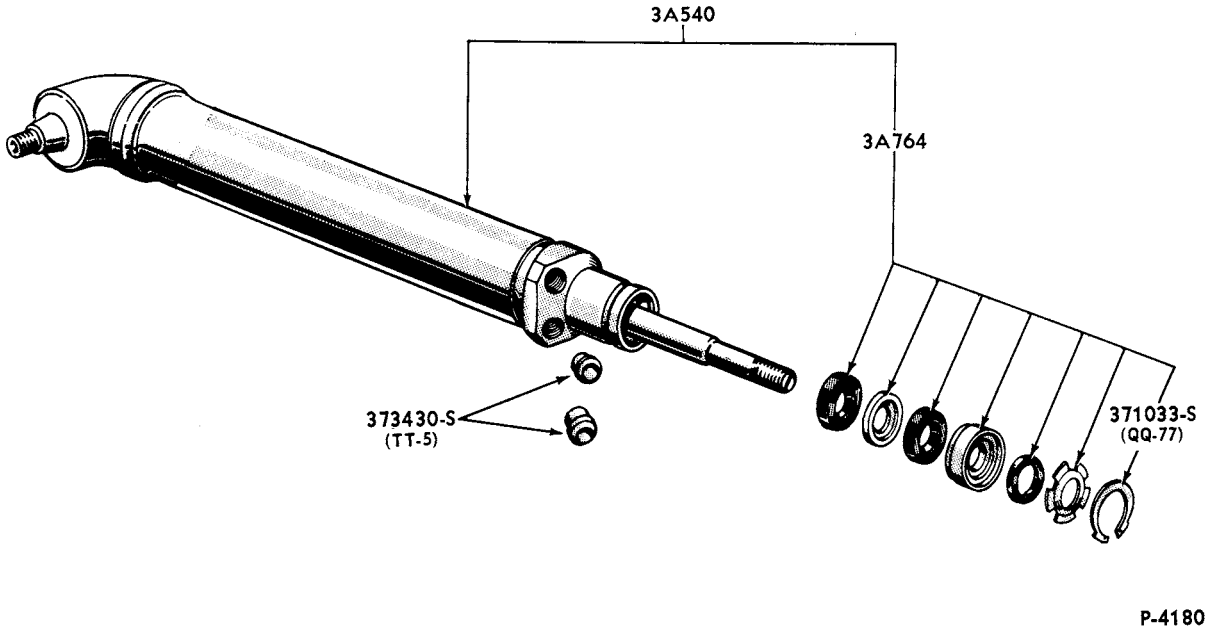

POWER STEERING CYLINDER ASSY.
1973/74 E100/300

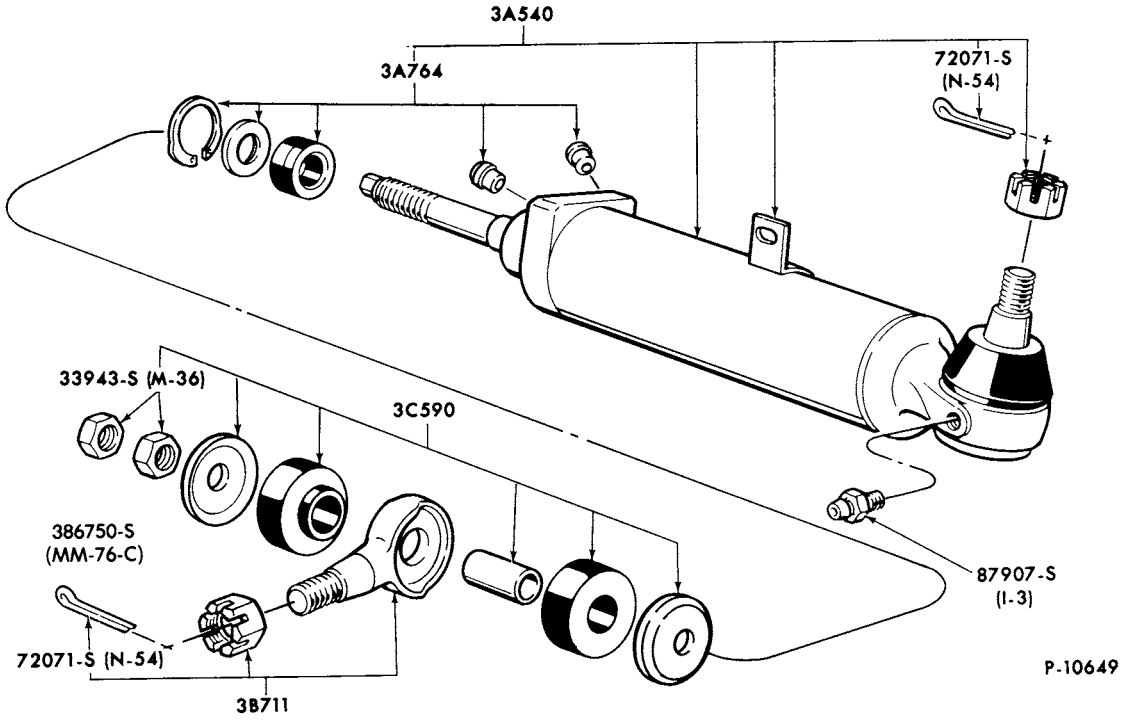

POWER STEERING CYLINDER ASSY.
1973/76 F100/250--4/W/D

COPYRIGHT © 1979 FORD MOTOR COMPANY, DEARBORN, MICHIGAN

P-8175

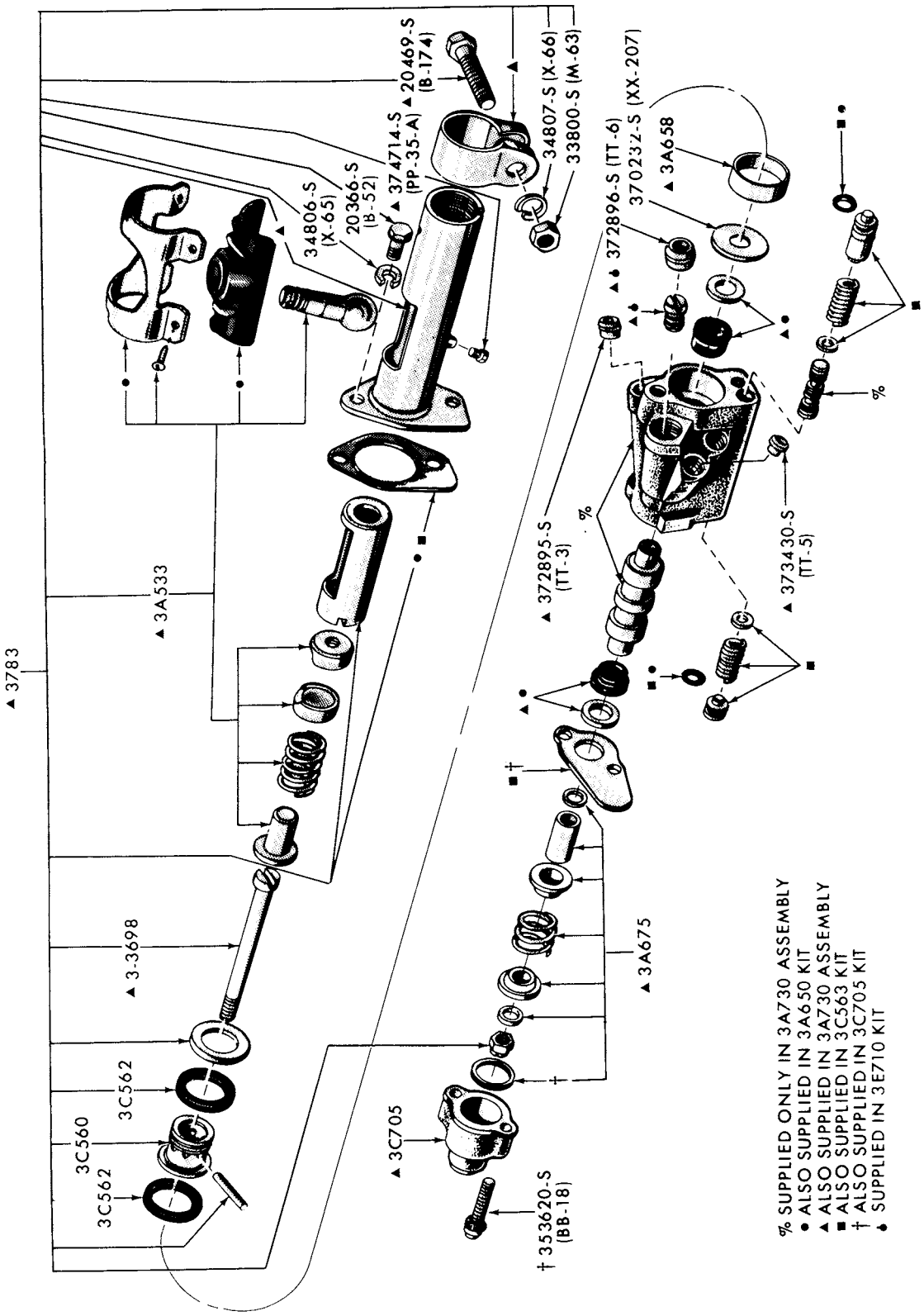

POWER STEERING CONTROL VALVE ASSY.
1973/74 E100/300

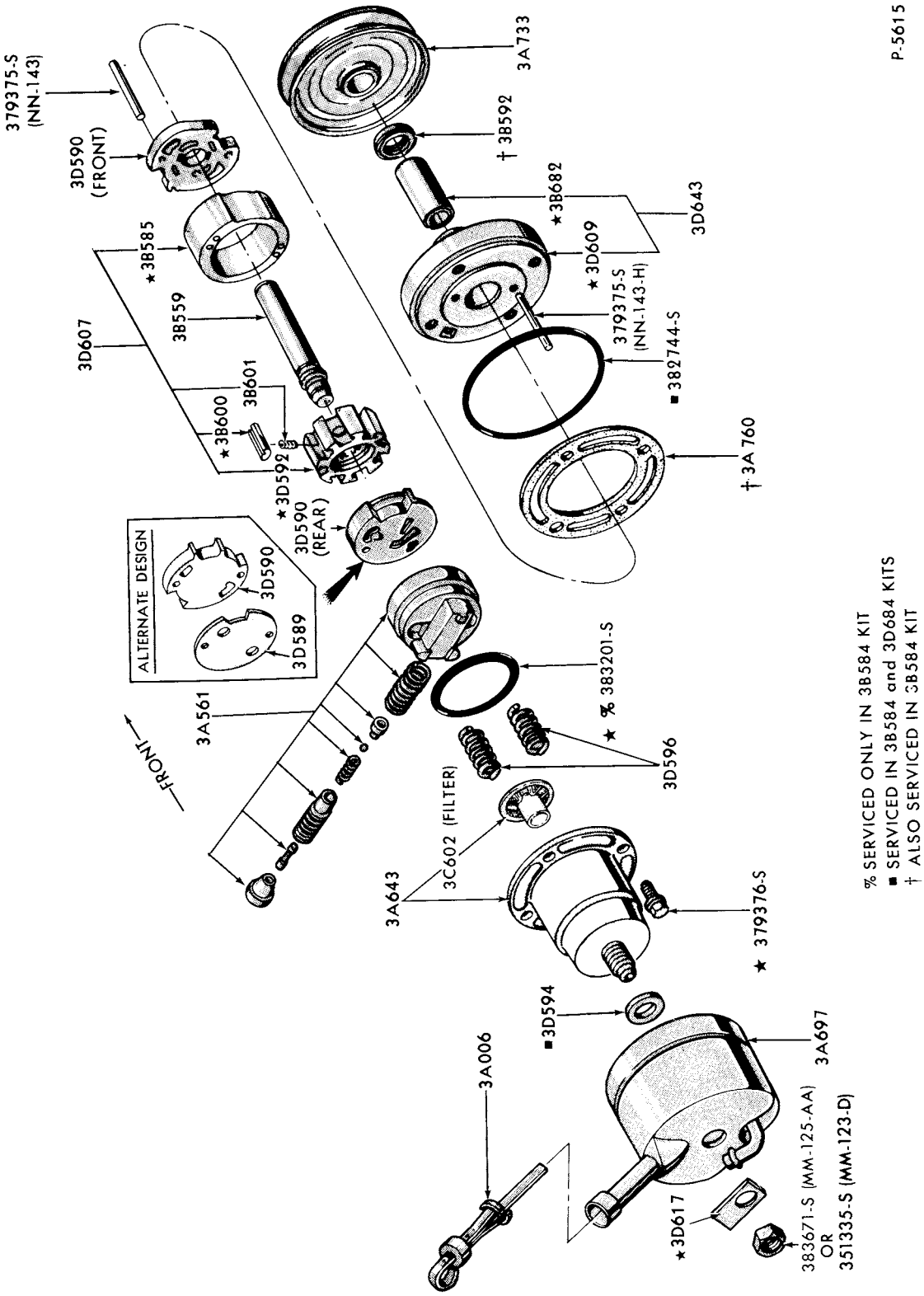

POWER STEERING PUMP ASSY.
1973/74 E100/300 and 1973/77 E100/350

COPYRIGHT © 1979 FORD MOTOR COMPANY - DEARBORN, MICHIGAN

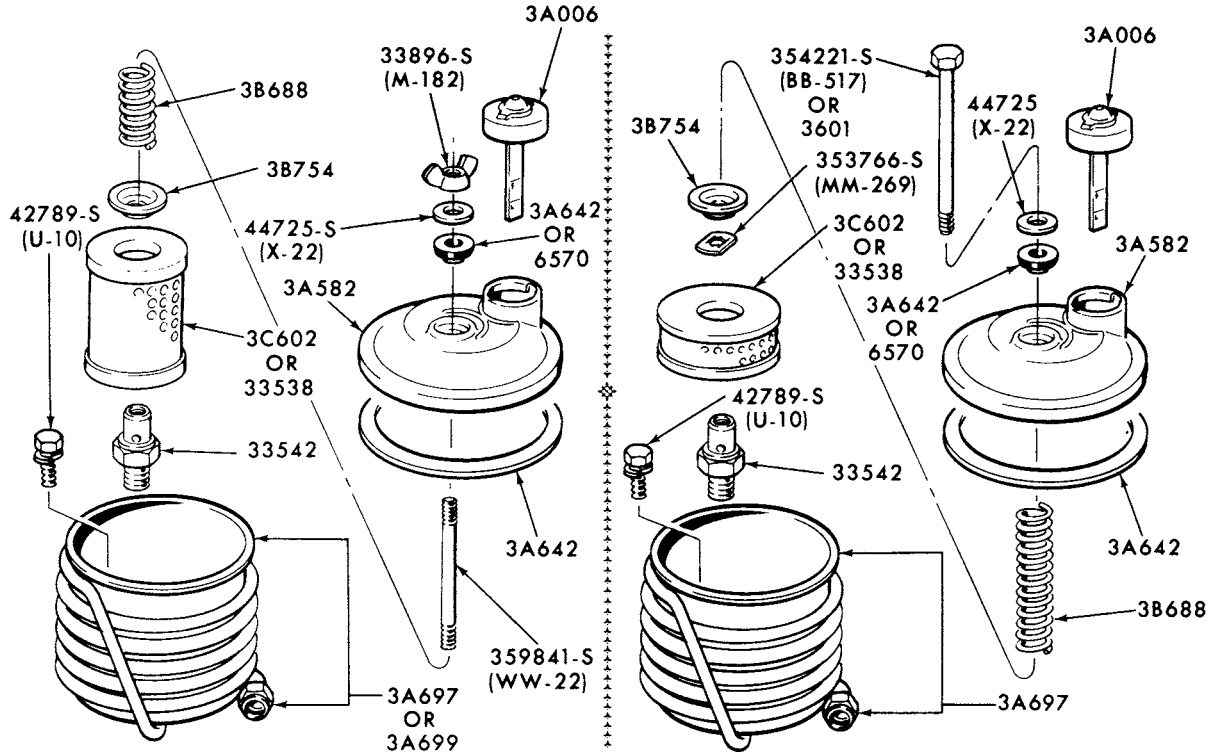

(TYPE 1) (TYPE 2)

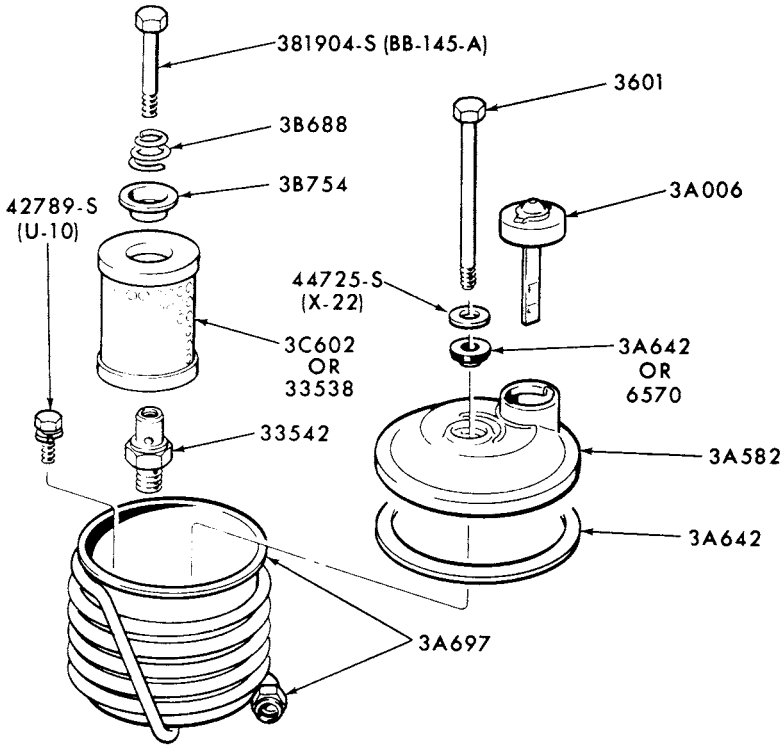

P-9437

(TYPE 3)

POWER STEERING PUMP RESERVOIR and RELATED PARTS-EATON
1973/77 B-F500

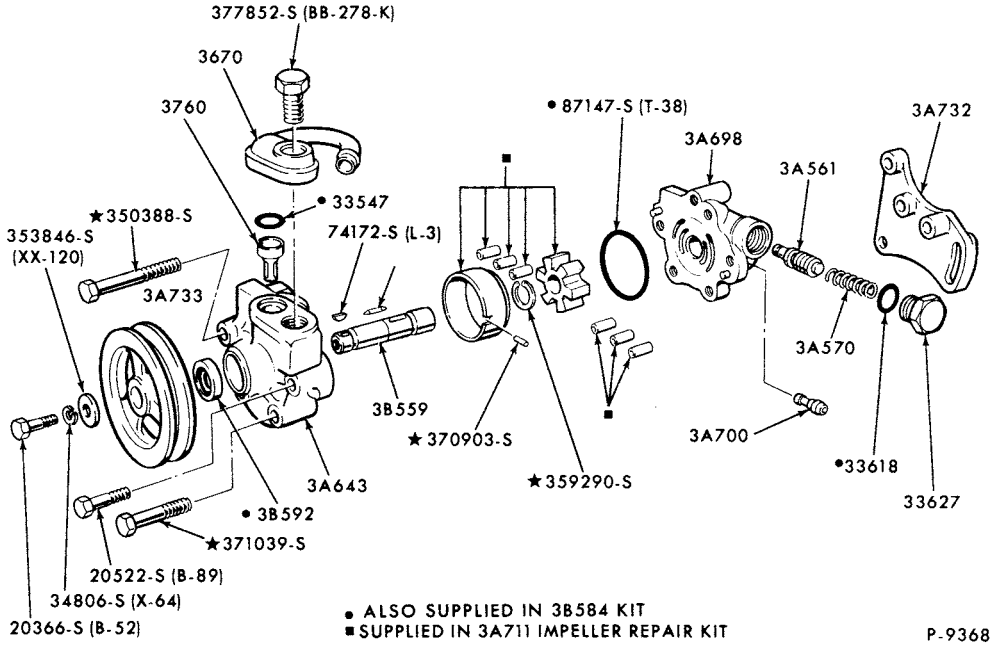

POWER STEERING PUMP ASSY.-EATON
1973/77 B-F500--6 CYL. and 1973/76 M450/500

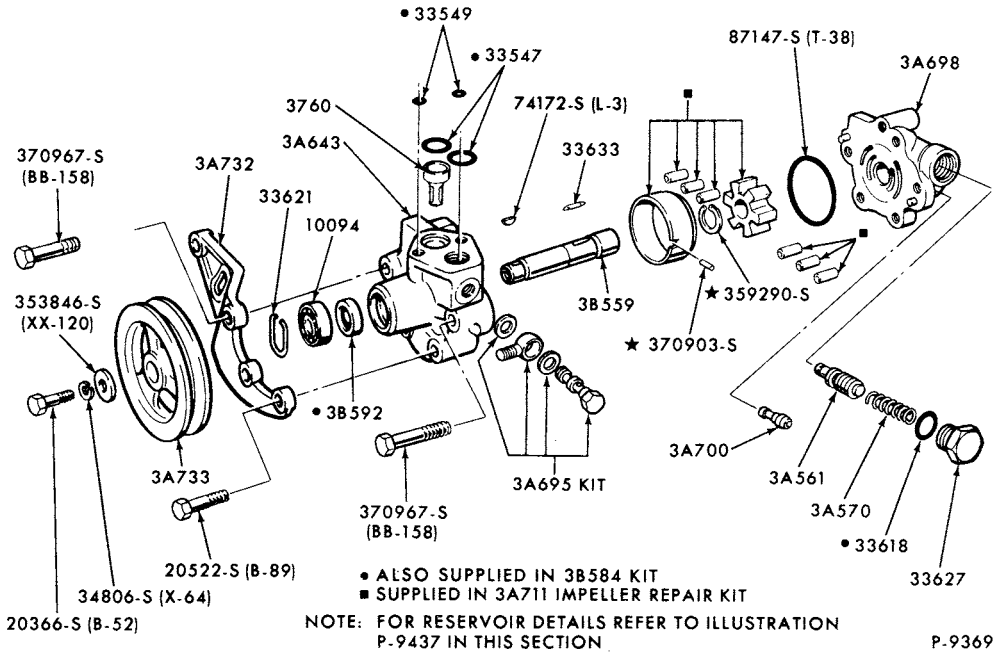

POWER STEERING PUMP ASSY.-EATON
1973/77 B-F500--8 CYL.

COPYRIGHT © 1980 FORD MOTOR COMPANY, DEARBORN, MICHIGAN

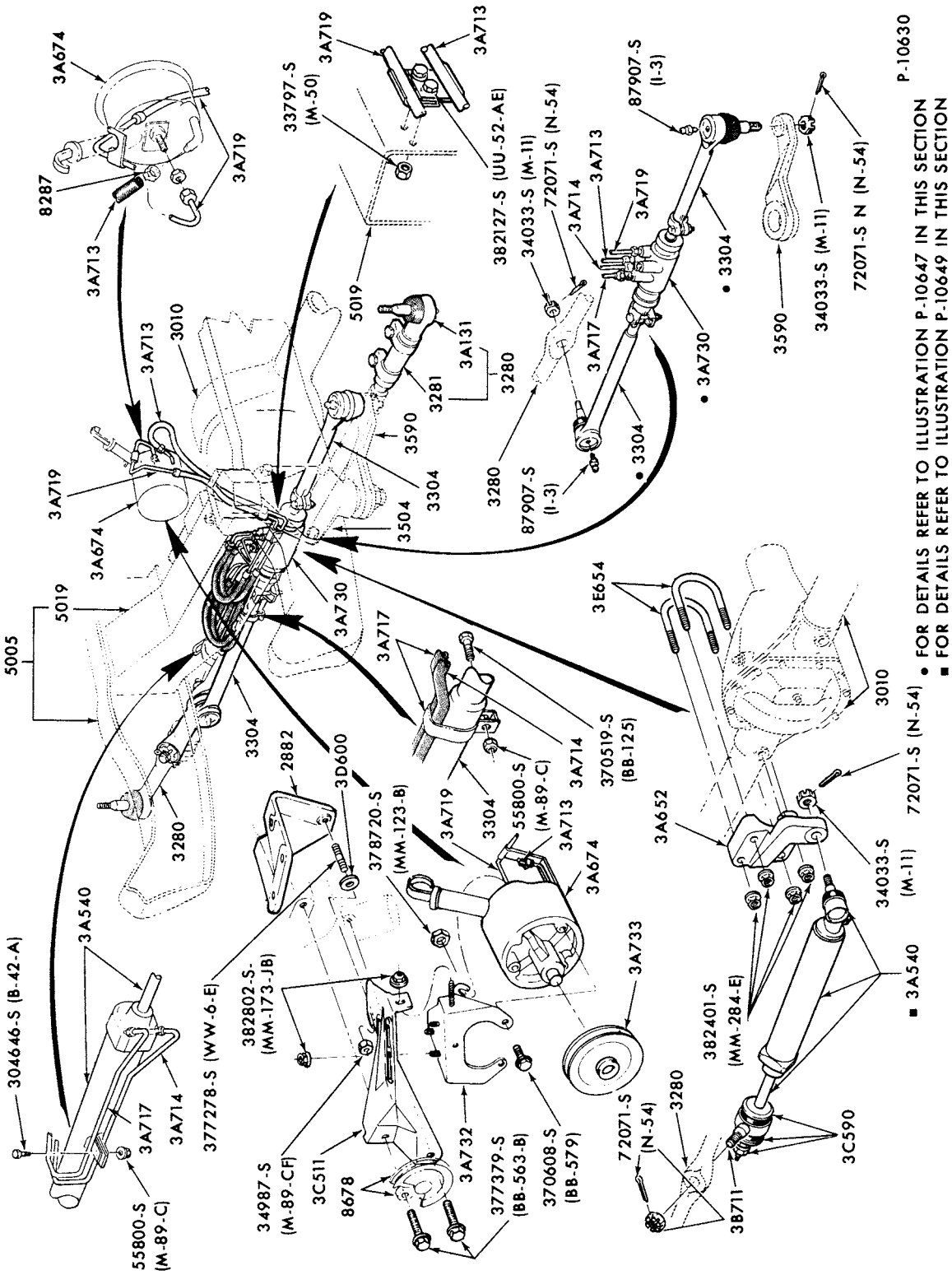

POWER STEERING HOSE, PUMP and LINKAGE INSTALLATION
1973/75 F100--4/W/D and 8 CYL. 360

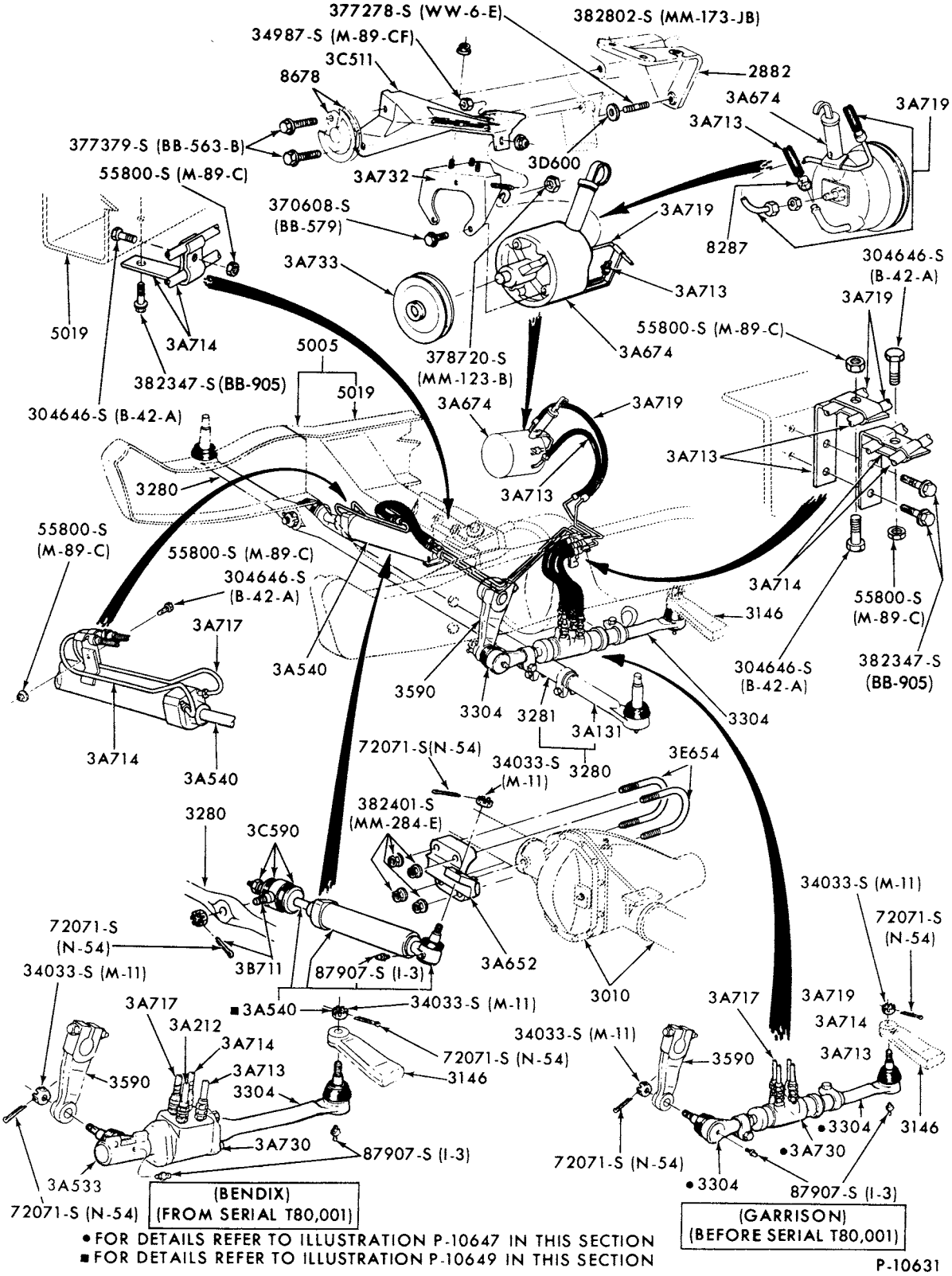

POWER STEERING HOSE, PUMP and LINKAGE INSTALLATION
1973/76 F250--4/W/D and 8 CYL.

COPYRIGHT © 1980 FORD MOTOR COMPANY - DEARBORN, MICHIGAN

1973/79 TRUCK SERIES 100/500

P-10647

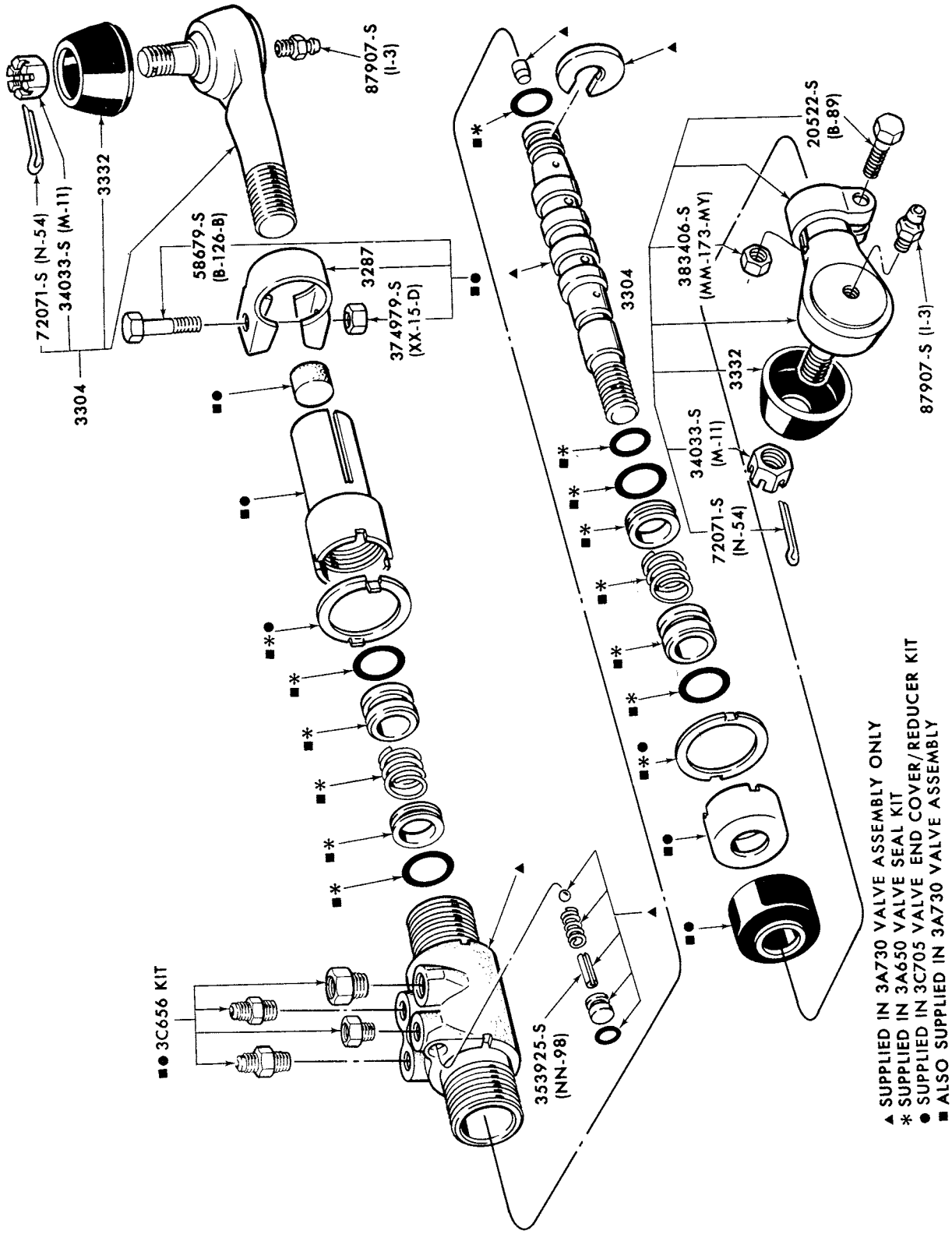

POWER STEERING CONTROL VALVE ASSY. - GARRISON TYPE
1973/ F100/150--4/W/D
1973/74 F250--4/W/D-"Before Ser. T80,001"

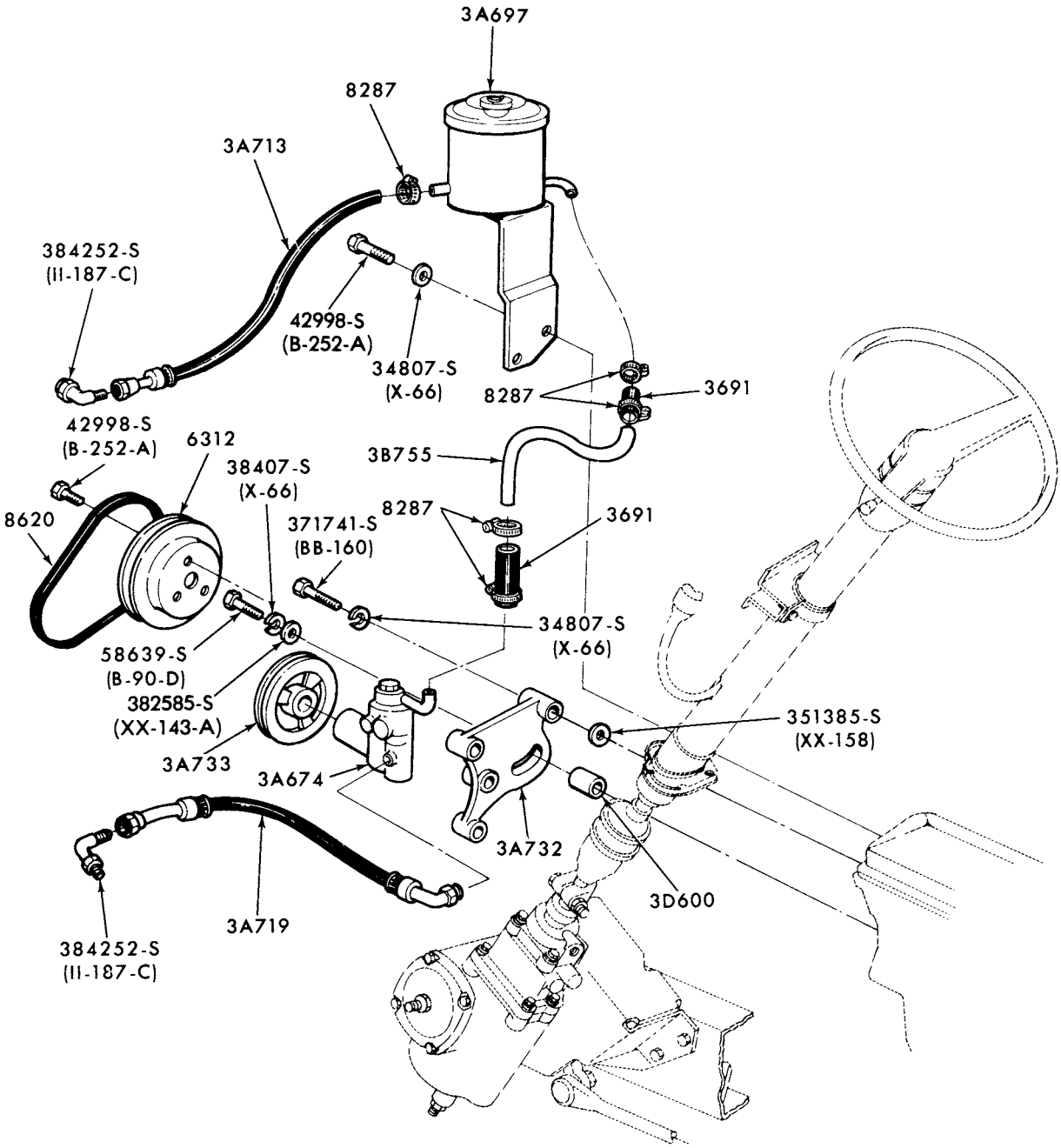

P-11543

POWER STEERING HOSE and PUMP INSTALLATION
1973/76 M450/500--8 CYL. 360,390

COPYRIGHT © 1980— FORD MOTOR COMPANY —DEARBORN, MICHIGAN

1973/79
TRUCK SERIES 100/500

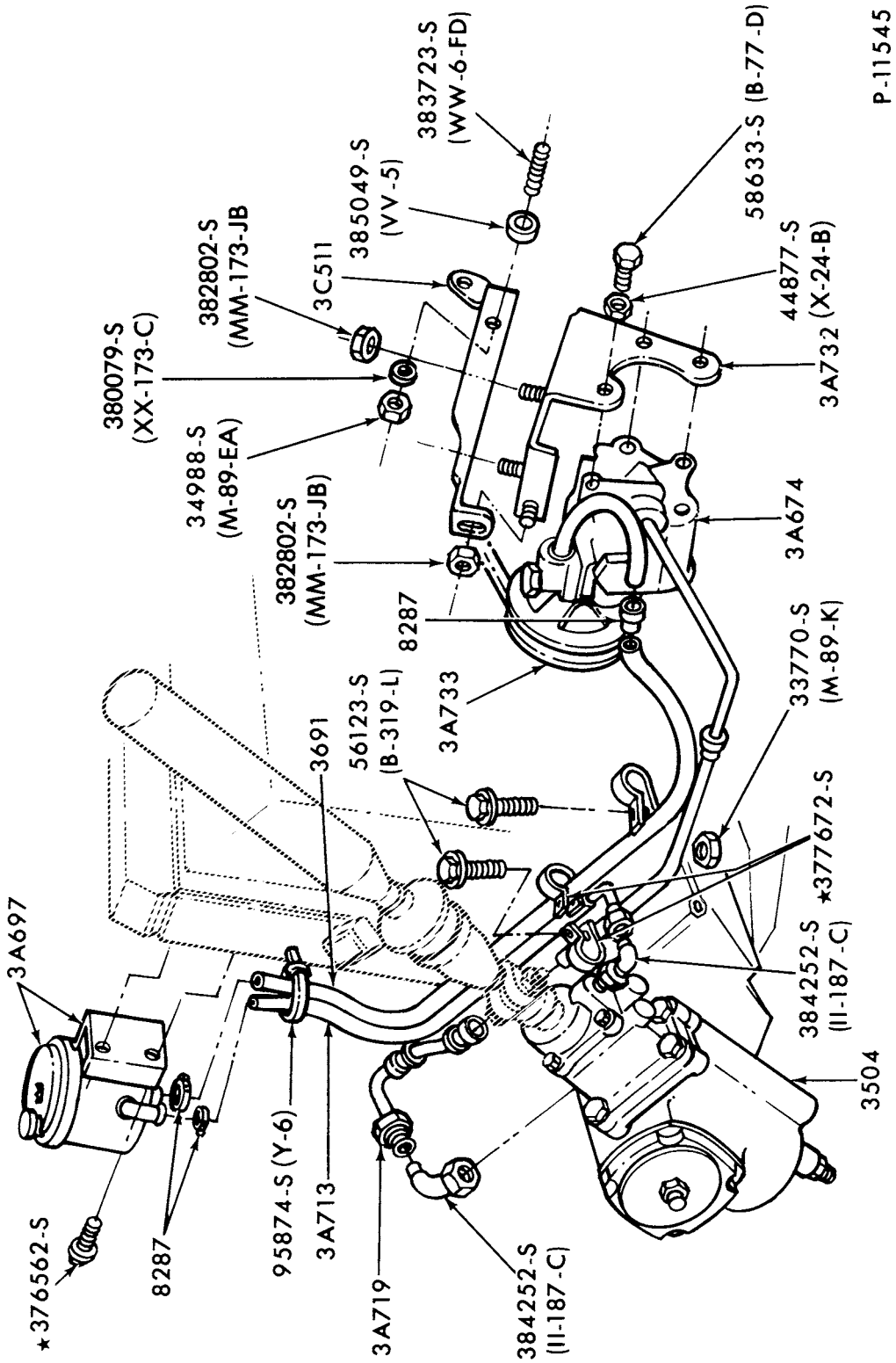

POWER STEERING HOSE and PUMP INSTALLATION
1973/76 M450/500--8 CYL. 460

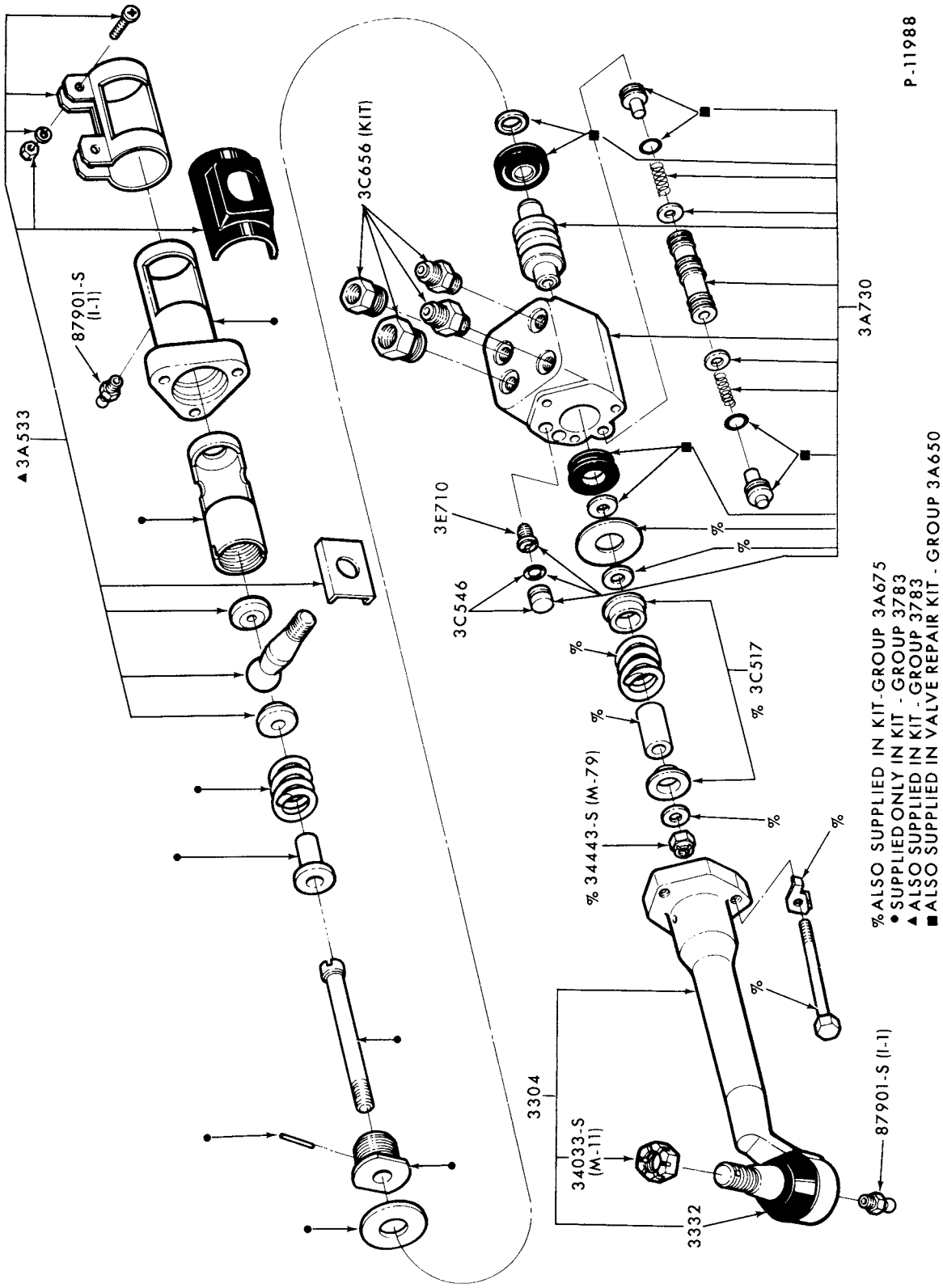

POWER STEERING CONTROL VALVE ASSY. - BENDIX TYPE
1974/77 F250--4/W/D-"From Ser. T80,001"

COPYRIGHT © 1980— FORD MOTOR COMPANY —DEARBORN, MICHIGAN

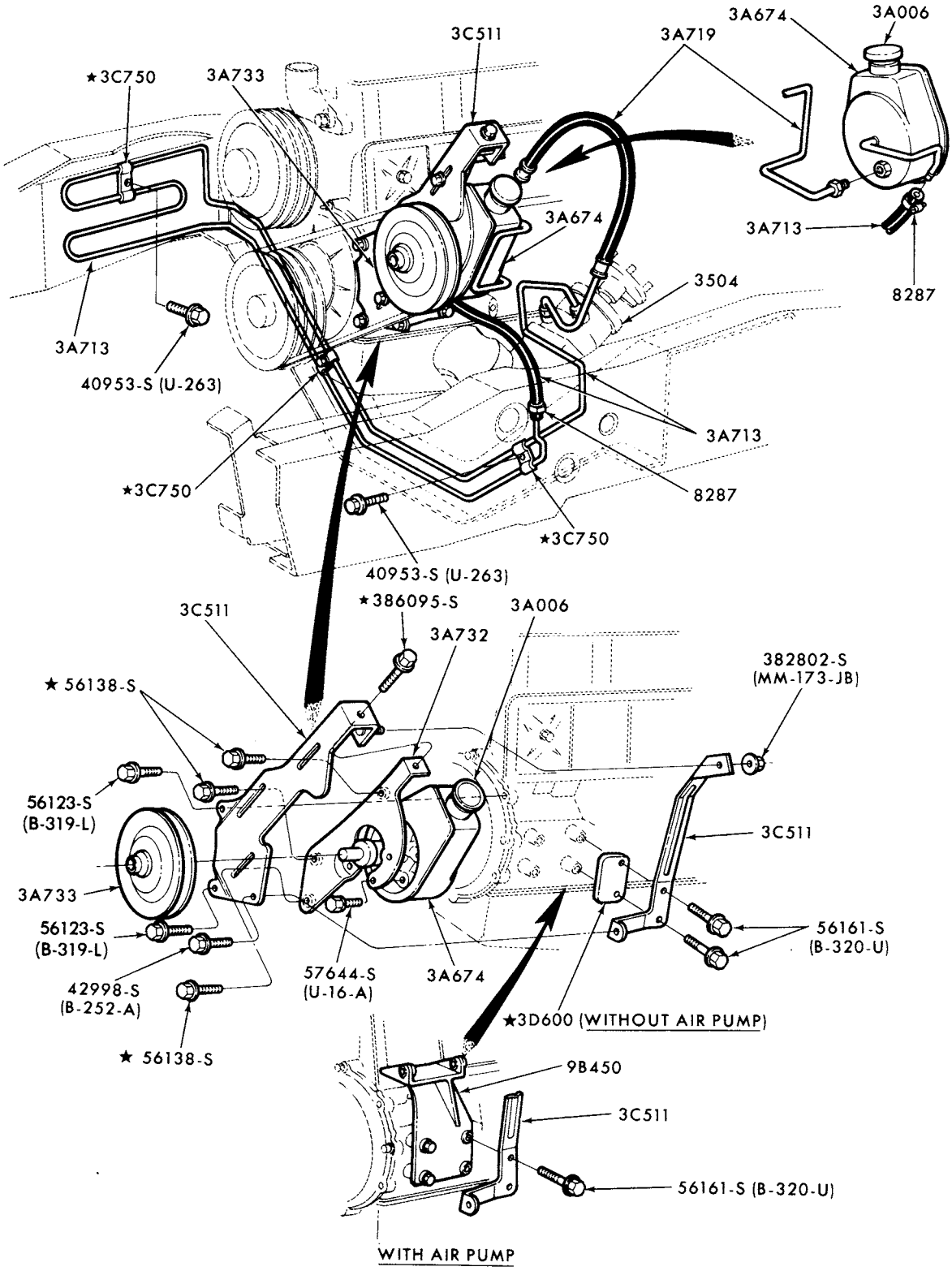

P-11672

POWER STEERING HOSE and PUMP INSTALLATION
1975/76 E100/350--6 CYL.

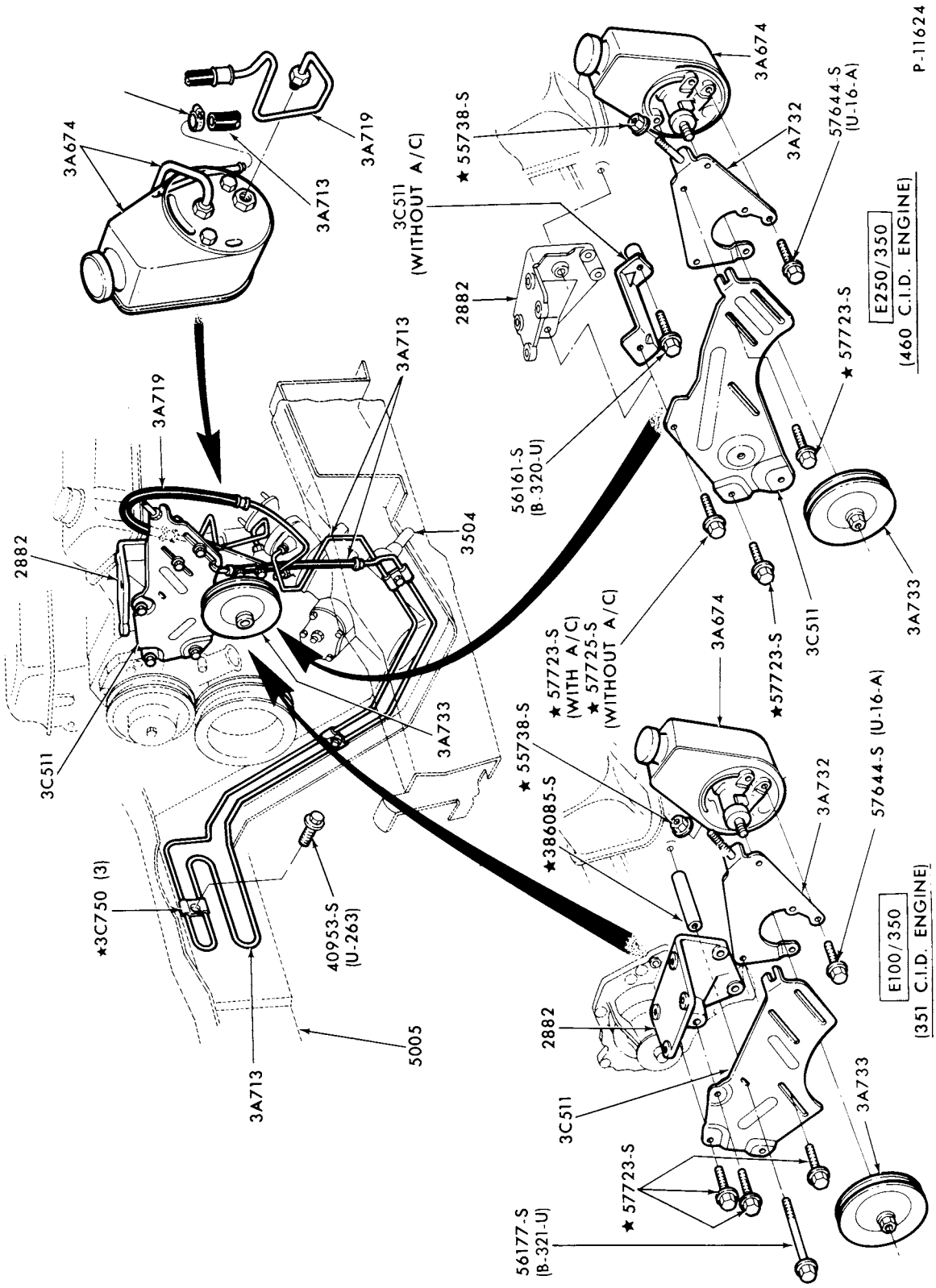

POWER STEERING HOSE and PUMP INSTALLATION
1975/76 E100/350--8 CYL.

COPYRIGHT © 1979 FORD MOTOR COMPANY DEARBORN, MICHIGAN

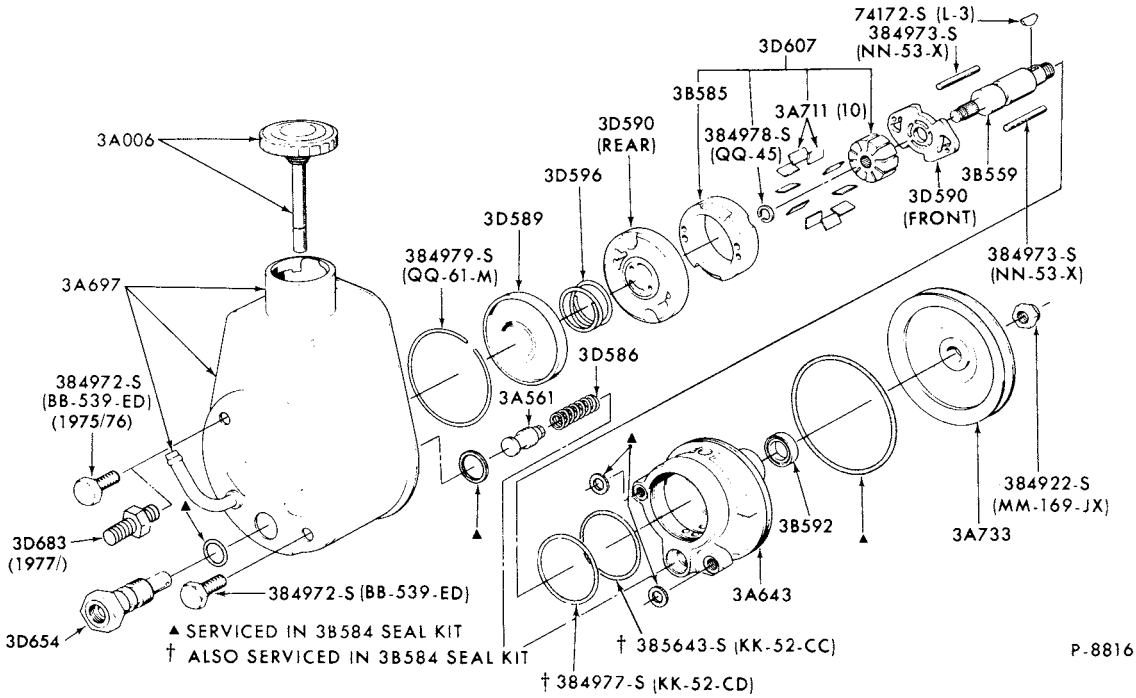

POWER STEERING PUMP (SAGINAW DESIGN)
1975/ E100/350

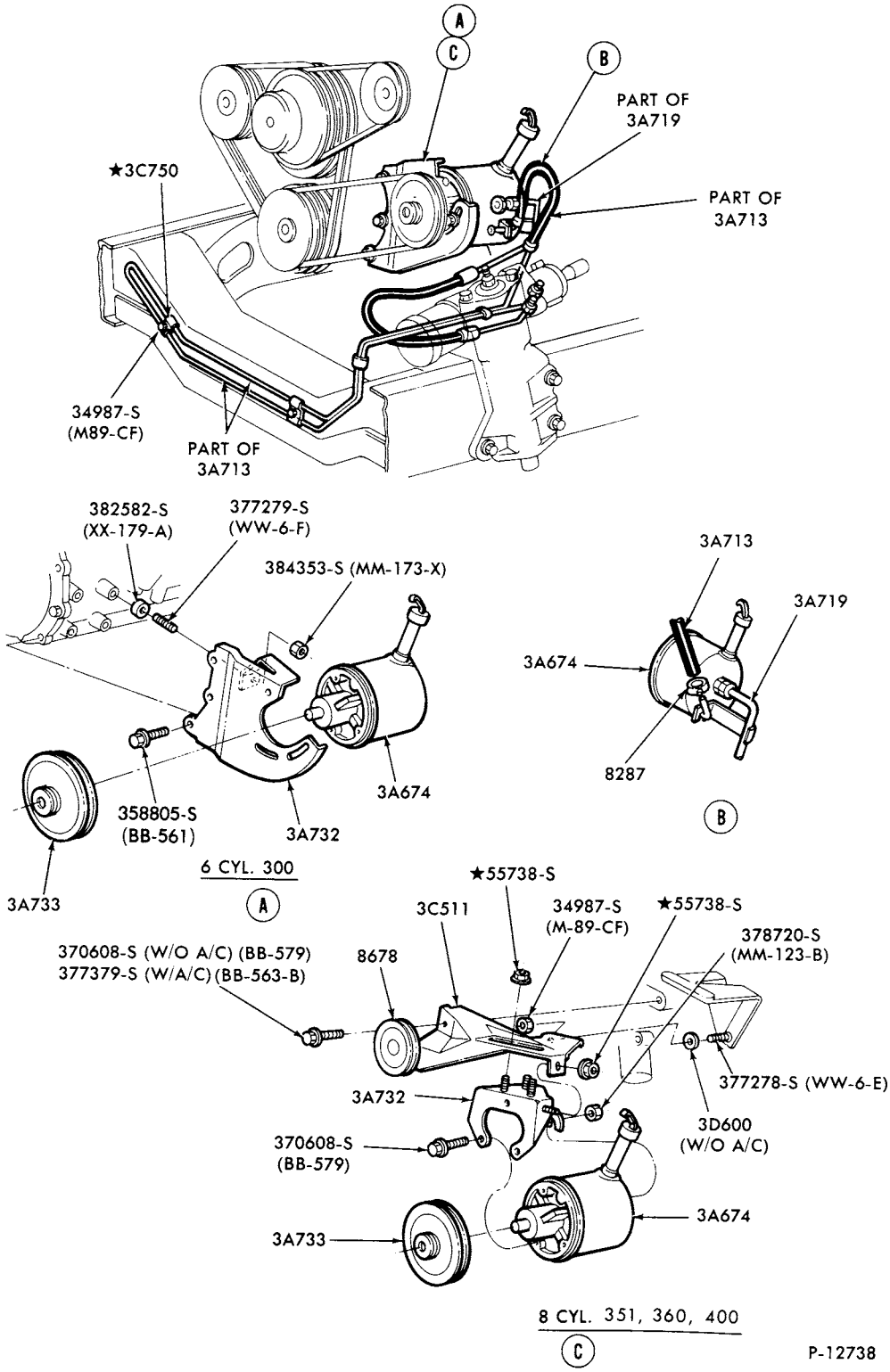

POWER STEERING HOSE and PUMP INSTALLATION
1976/77 F100/150--4/W/D and 6 CYL. 300, 8 CYL. 351,360 and 400

COPYRIGHT © 1979 FORD MOTOR COMPANY DEARBORN, MICHIGAN

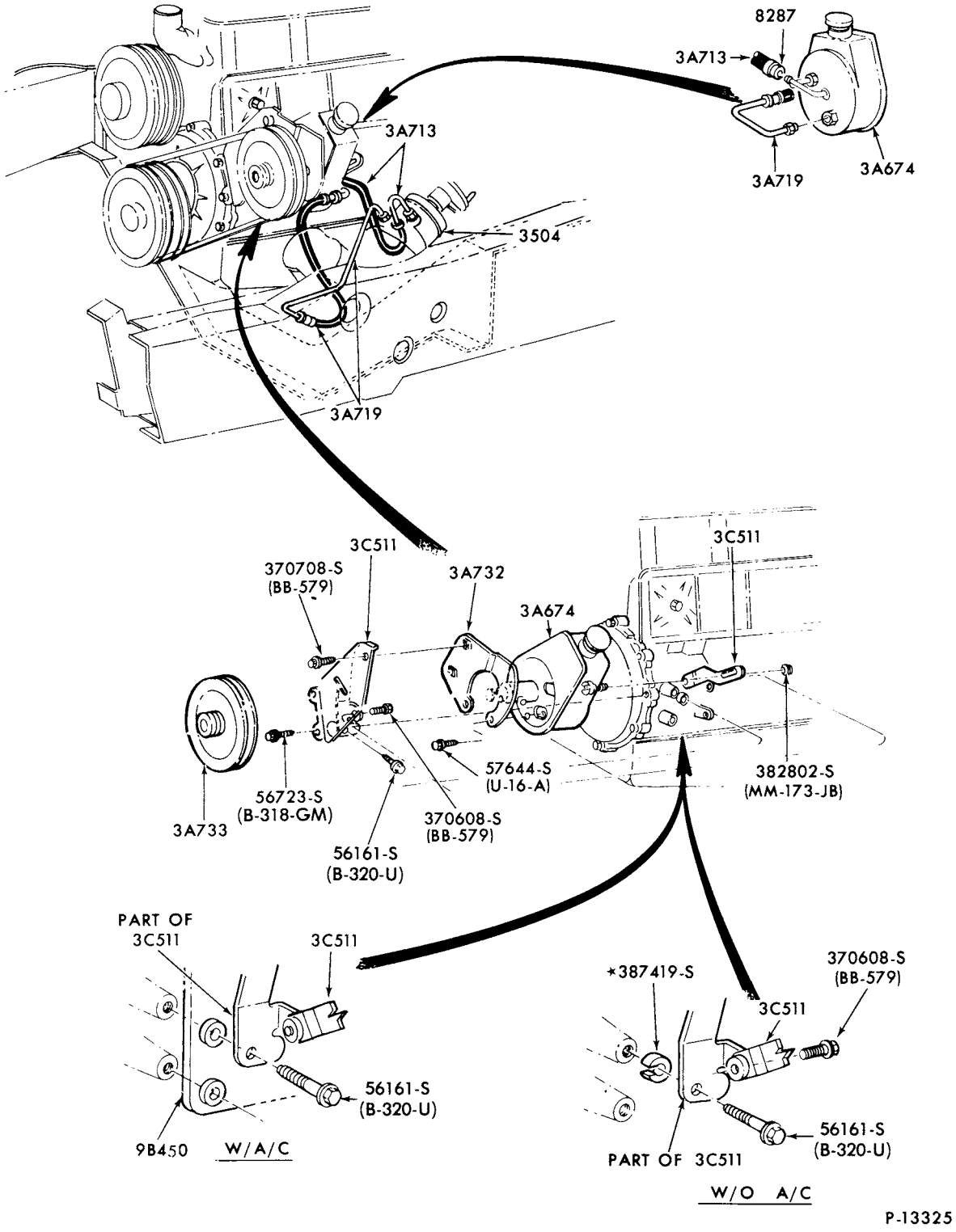

POWER STEERING HOSE and PUMP INSTALLATION
1977/ E100/350--6 CYL. 300

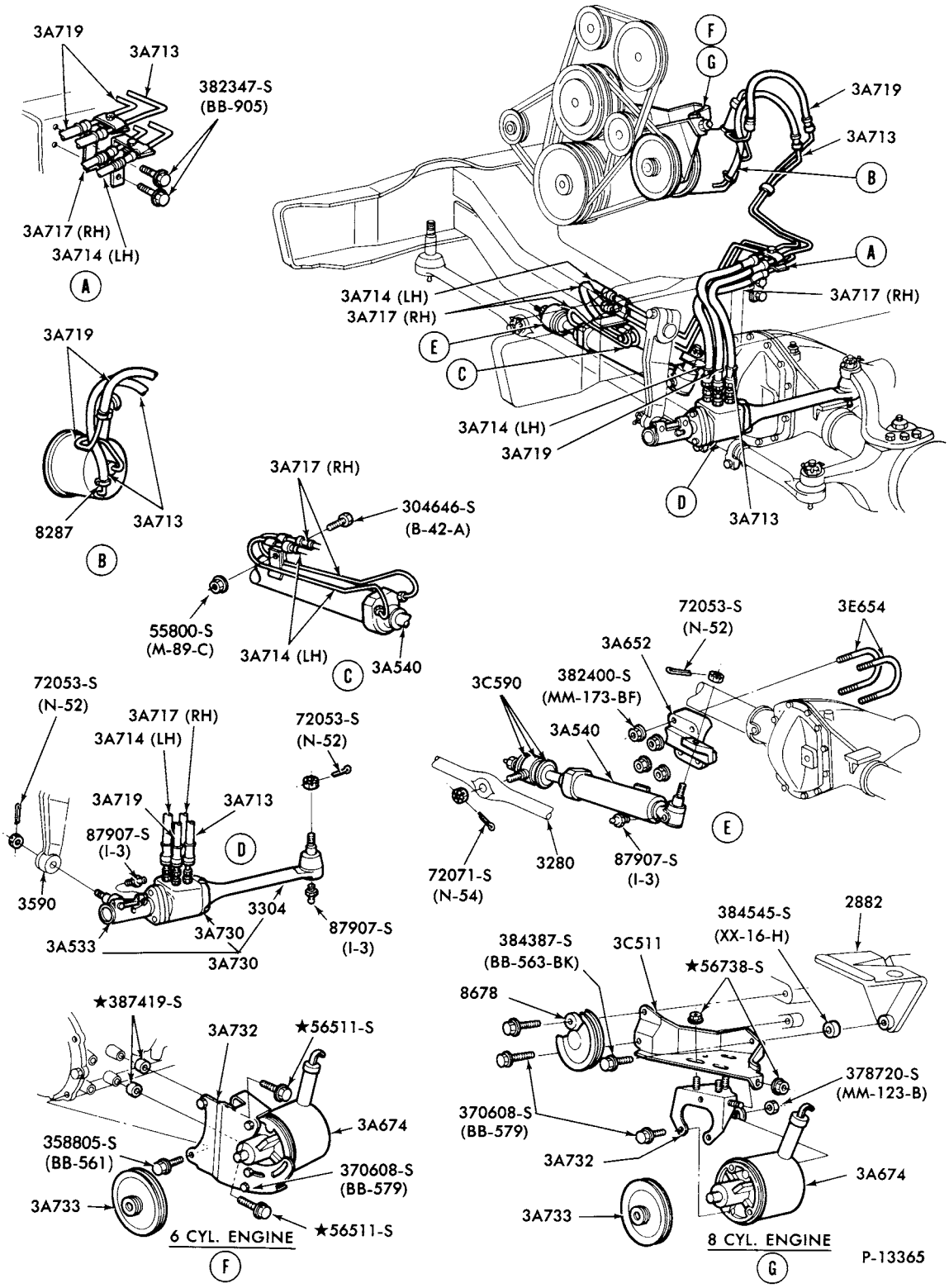

POWER STEERING HOSE, PUMP and LINKAGE INSTALLATION
1977 F250--4/W/D and 6 CYL. 300, 8 CYL. 351M and 400

COPYRIGHT © 1979 -FORD MOTOR-DEARBORN, MICHIGAN COMPANY

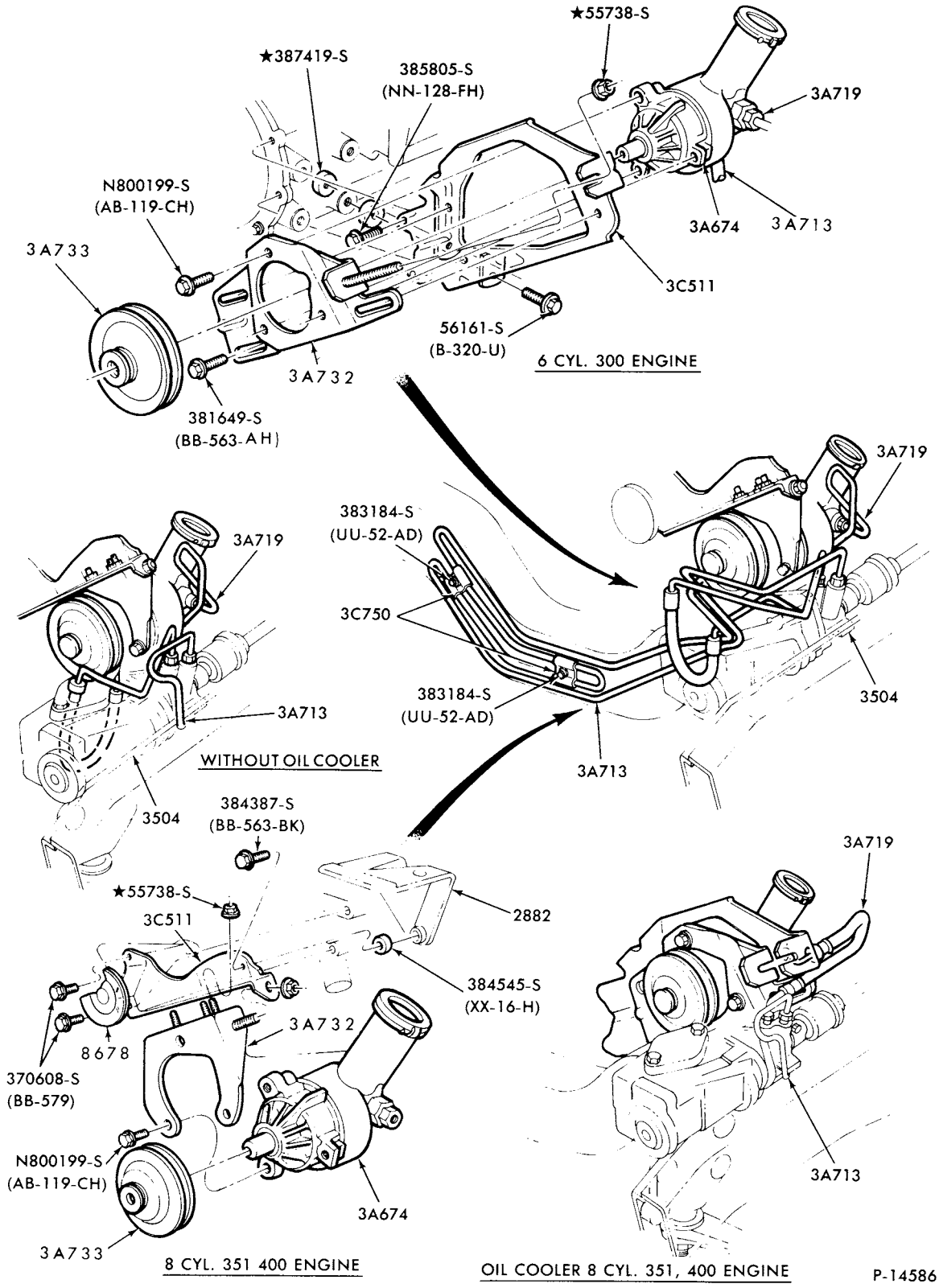

POWER STEERING HOSE and PUMP INSTALLATION
1978/ F150/250--4/W/D-6 CYL. 300, 8 CYL. 351 and 400

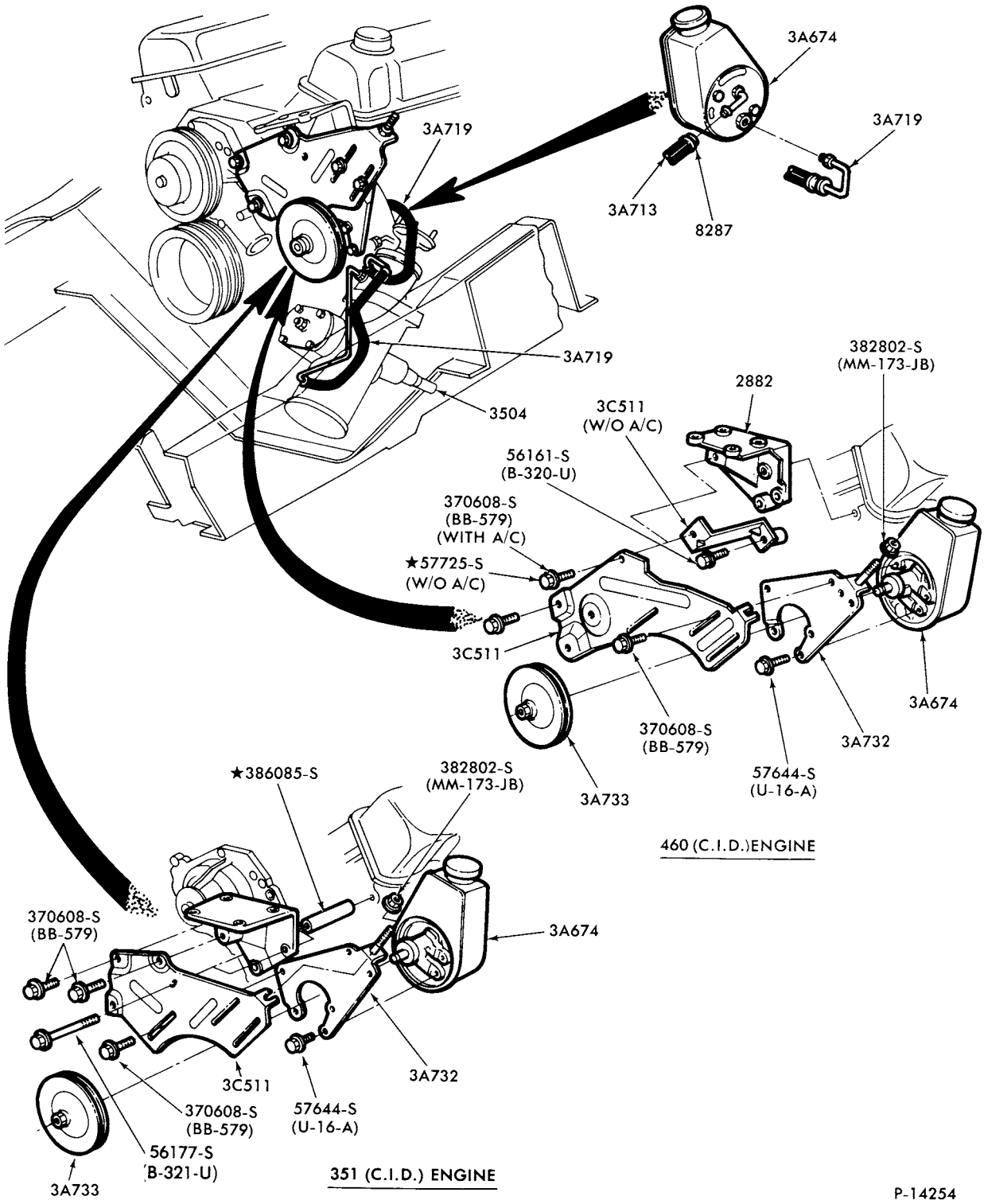

POWER STEERING HOSE and PUMP INSTALLATION
1977 E100/350--8 CYL.

COPYRIGHT © 1979 FORD MOTOR COMPANY
FORD MOTOR-DEARBORN, MICHIGAN

1973/79 TRUCK SERIES 100/500

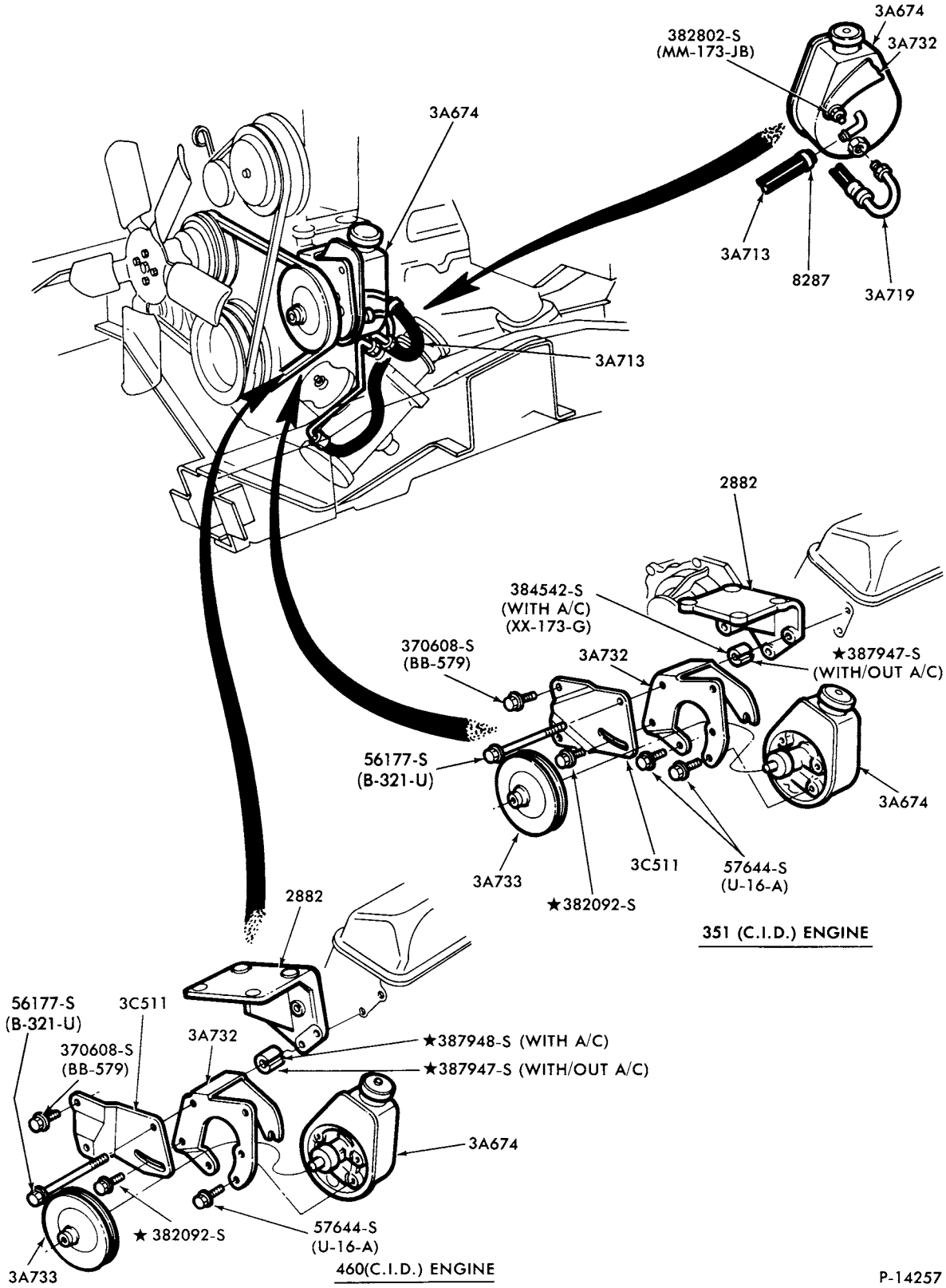

POWER STEERING HOSE and PUMP INSTALLATION
1978/ E100/350--8 CYL.

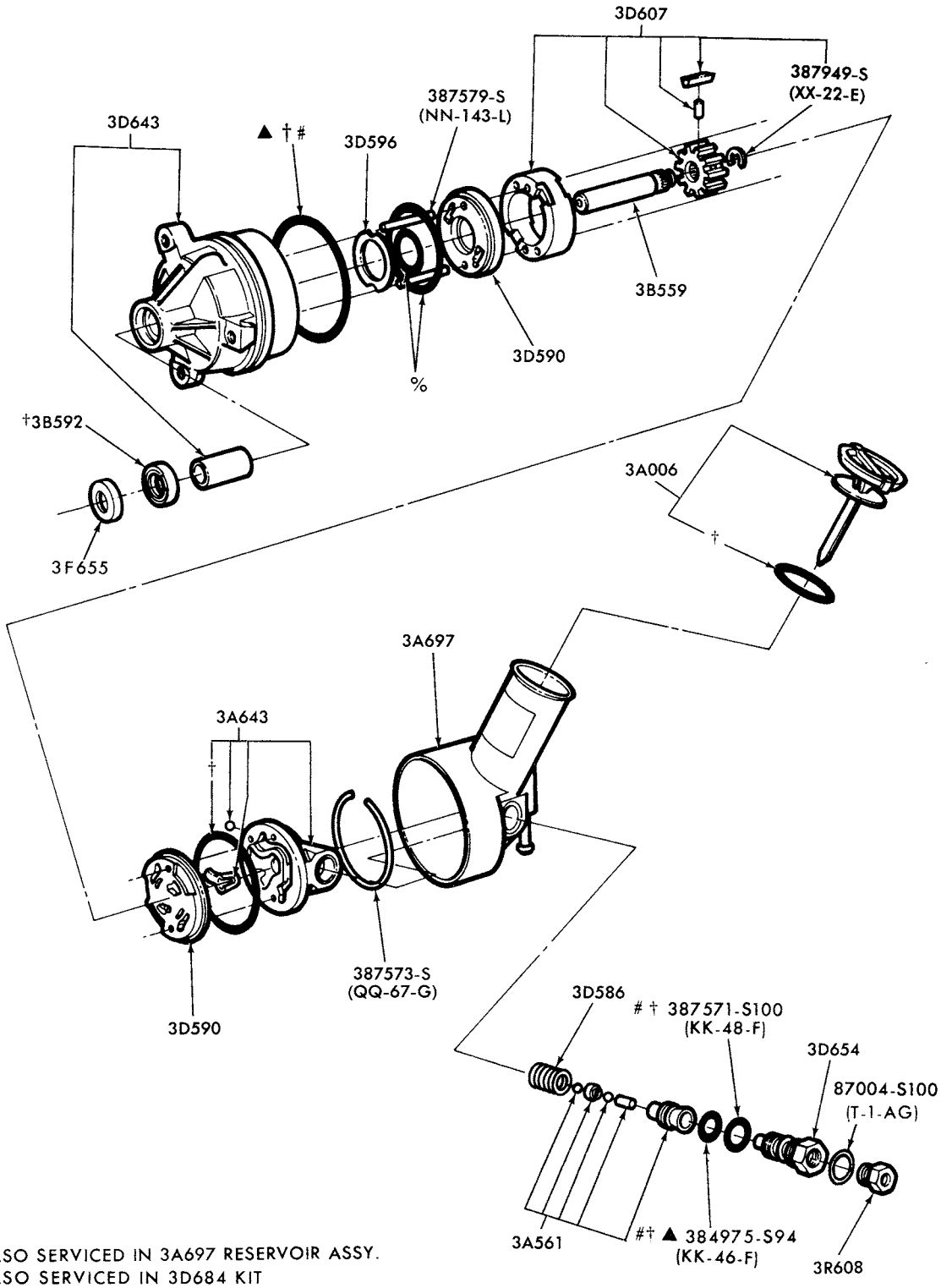

▲ ALSO SERVICED IN 3A697 RESERVOIR ASSY.
ALSO SERVICED IN 3D684 KIT
%SERVICED ONLY IN 3B584 KIT
†ALSO SERVICED IN 3B584 KIT

P-14265

POWER STEERING PUMP ASSY. - FORD C-II DESIGN
1978/ F100/350

COPYRIGHT © 1980— FORD MOTOR COMPANY —DEARBORN, MICHIGAN

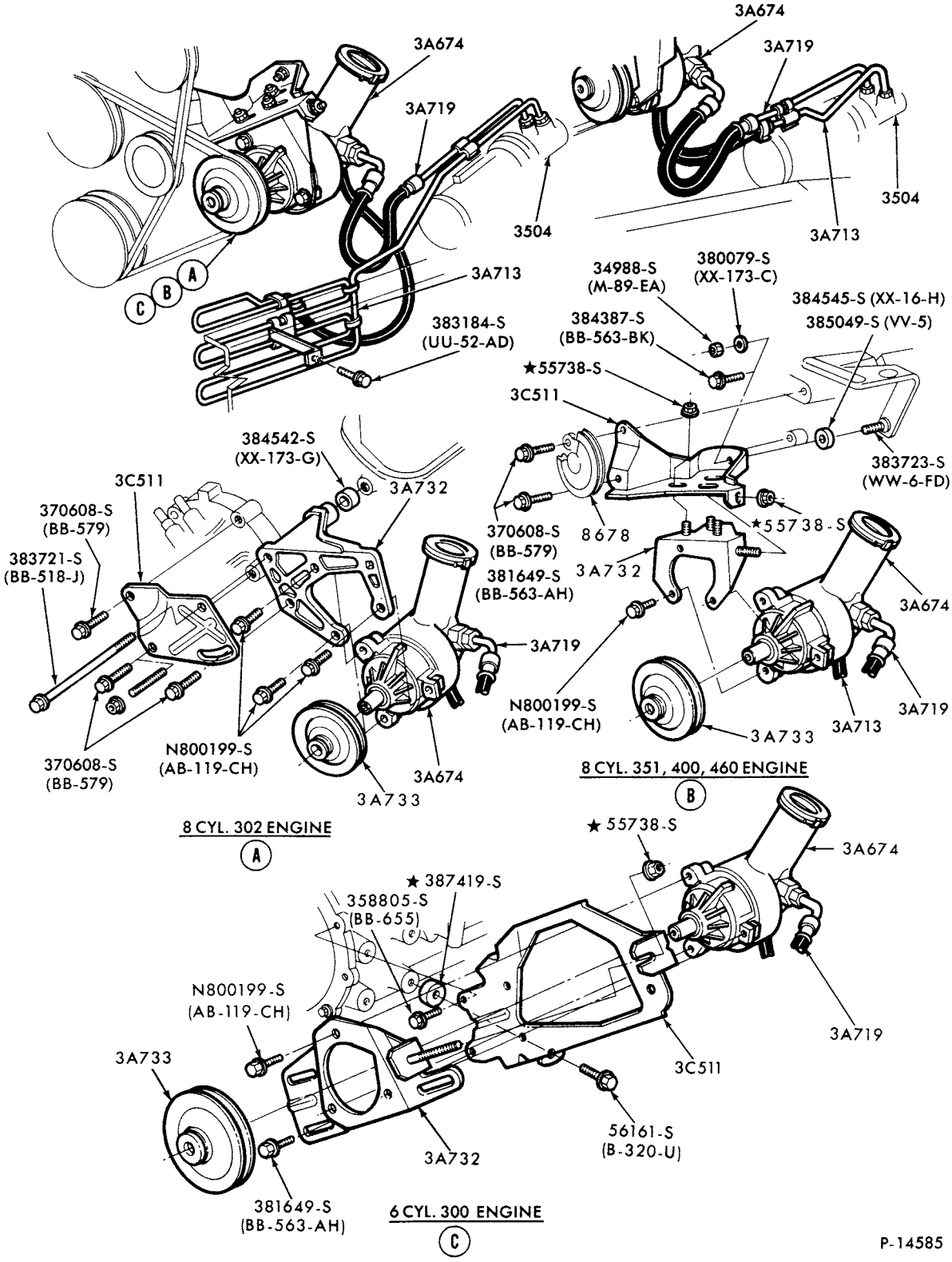

POWER STEERING HOSE and PUMP INSTALLATION
1978/ F100/350--2/W/D

INDEX

YEAR 19__	TITLE	MODEL	SECTION	PAGE	ILLUS. NO.
	FRONT AXLE (FOUR WHEEL DRIVE)-Refer to Illustration Section 30				
	REAR AXLE				
	(SINGLE SPEED)				
	DANA (SPICER)				
77/78	Locking and non-locking-44-3	F100	40	10	P-15009
73/	Non-locking-60, 60HD, 60.3E, 61-1, 61-2 and 70B	E300/350, F250/350 and P350/400	40	2	P-3066
73/	Locking-60, 60HD, 60.3E and 61-1	E300 and F250	40	7	P-8311
73/	Locking-70	E350 and F250/350	40	9	P-8722
	FORD				
73/	Non-locking-WDM, WEV, WEW	E100/250 and F100/150	40	1	P-2371
73/	Locking-WDM, WFE, WFT	E-F100/150	40	4	P-7020
	ROCKWELL (TIMKEN)				
73/77	C100 D100, D140	M450/500 B-F-P500 and M450/500	40	3	P-1982
73/77	F106	B-F500	40	6	P-1984
	(TWO SPEED)				
	EATON				
73/77	15201	B-F500	40	5	P-5234
	SHIFT SYSTEM				
	(TWO SPEED)				
73/77	Shift assy.-electric-Eaton	B-F500	40	7	P-4446
73/77	Shift system-electric-Eaton and Rockwell (Timken)	B-F500	40	8	P-4441
	DRIVESHAFT and COUPLING SHAFT				
73/	Automatic trans.	E-F100/350	46	1	P-8844
73/	Short wheel base	E-F-P100/350	46	1	P-8843
73/	Two wheel drive	F-P100/500	46	3	P-2012
73/76	Four wheel drive	F100/350	46	4	P-10740
77/	Four wheel drive	F150/350	46	4	P-10740
73/77	Four wheel drive (single cardan)	F250	46	2	P-2843
74/	Four wheel drive (double cardan)	F100/250	46	5	P-7280

COPYRIGHT © 1979 - FORD MOTOR COMPANY —DEARBORN, MICHIGAN

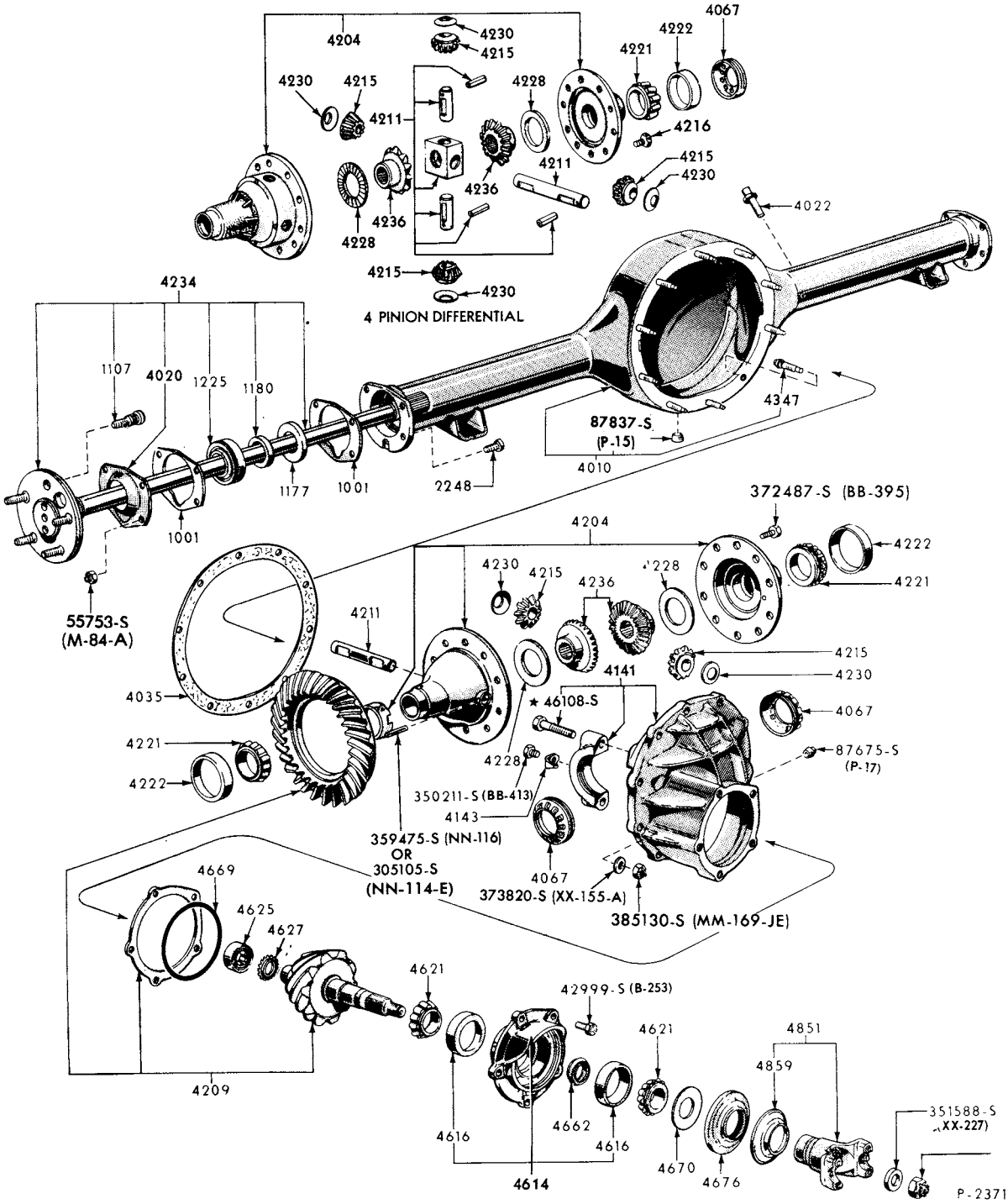

REAR AXLE (SINGLE SPEED)-FORD WDM, WEV and WEW (NON-LOCKING)
1973/ E100/250 and F100/150

COPYRIGHT © 1979 FORD MOTOR COMPANY

1973/79 TRUCK SERIES 100/500

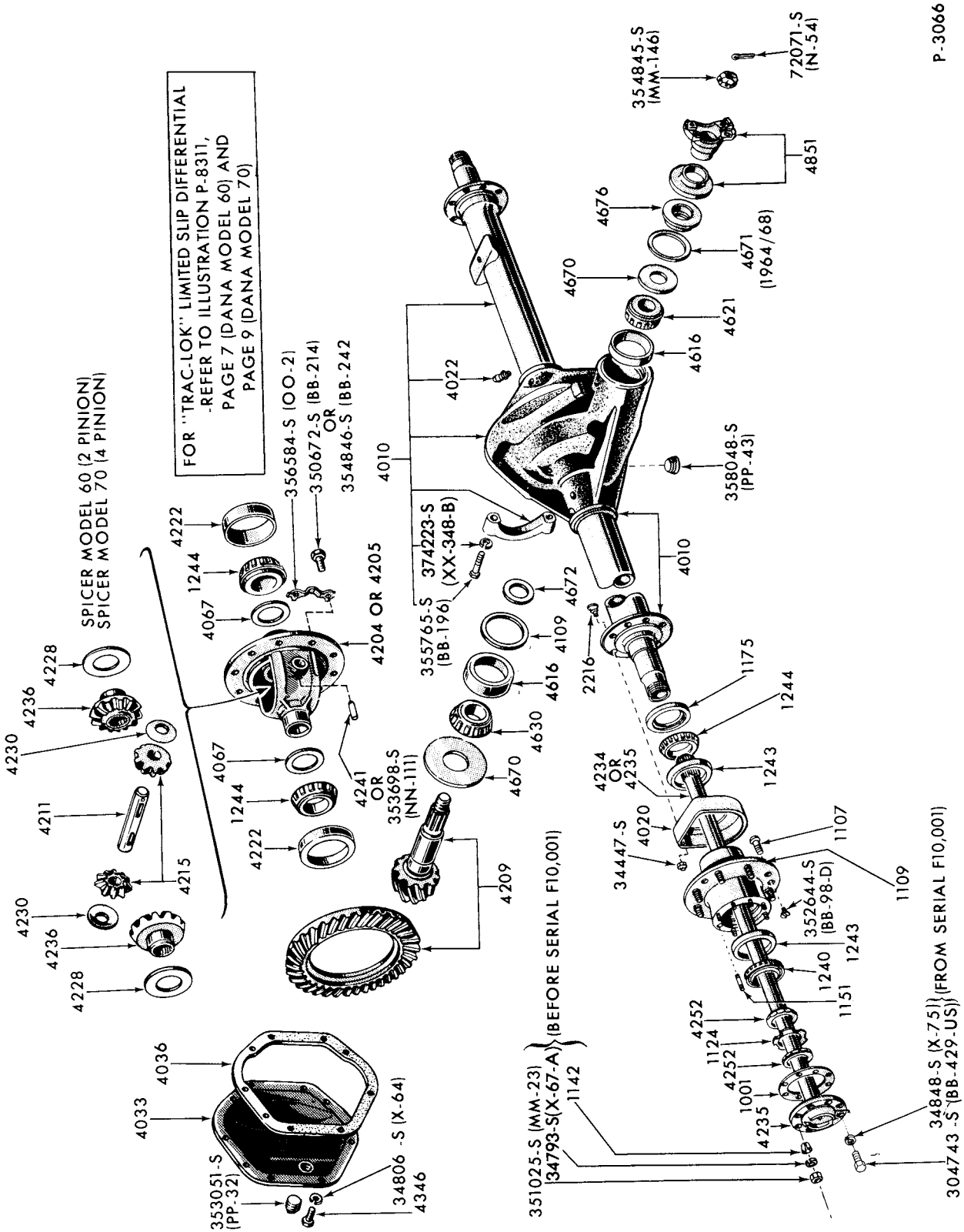

REAR AXLE(SINGLE SPEED)-DANA(SPICER) 60,60HD,60,3E,61-1,61-2 and 70B (NON-LOCKING)
1973/ E-F-P250/350 and 1973/77 P400

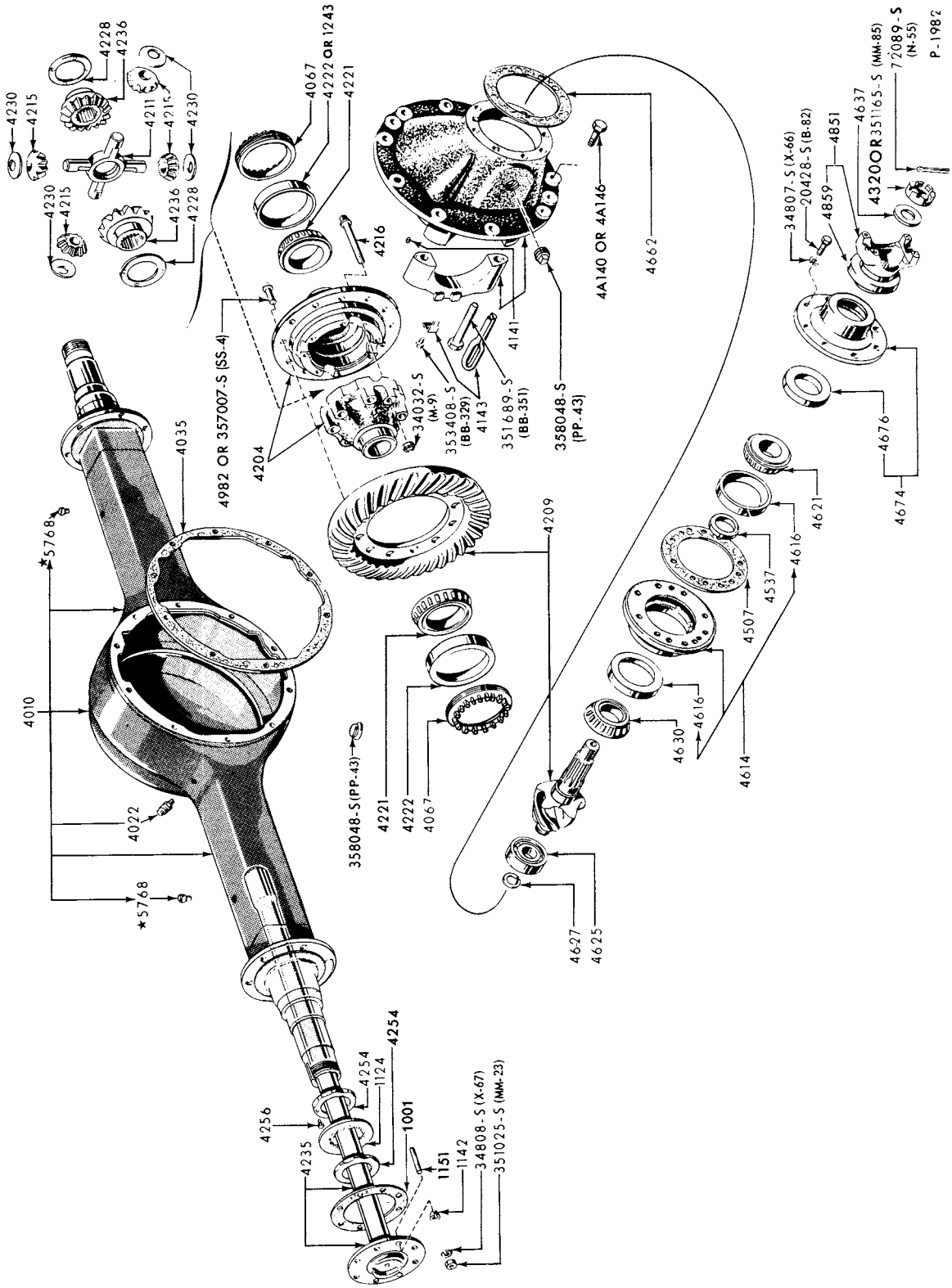

REAR AXLE (SINGLE SPEED)-ROCKWELL (TIMKEN) C100, D100 and D140
1973/77 B-F-P500 and 1973/76 M450/500

COPYRIGHT © 1979 FORD MOTOR COMPANY - DEARBORN, MICHIGAN

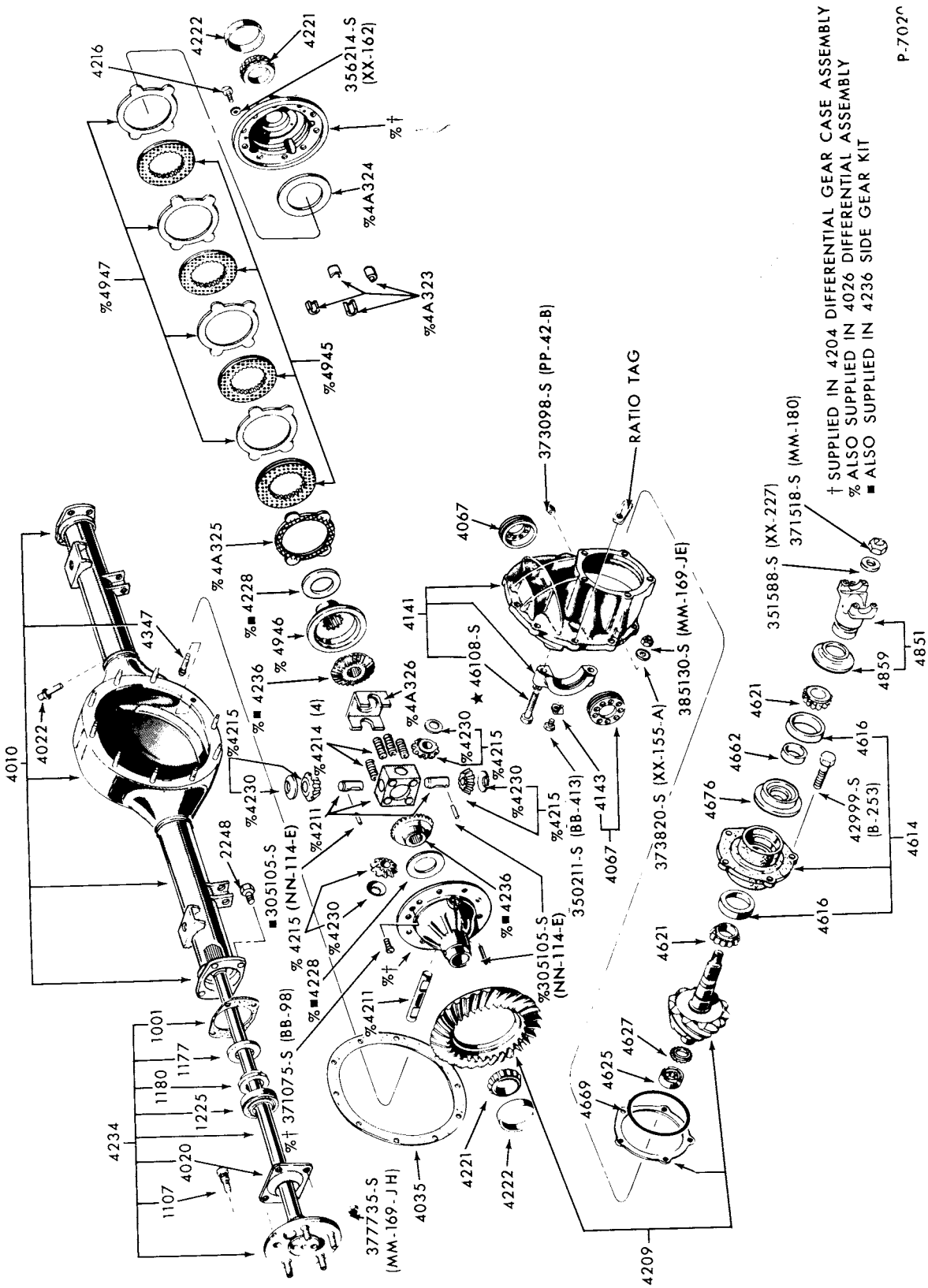

REAR AXLE (SINGLE SPEED)-FORD WDM,WFE and WFT (LOCKING)
1973/ E-F100/150

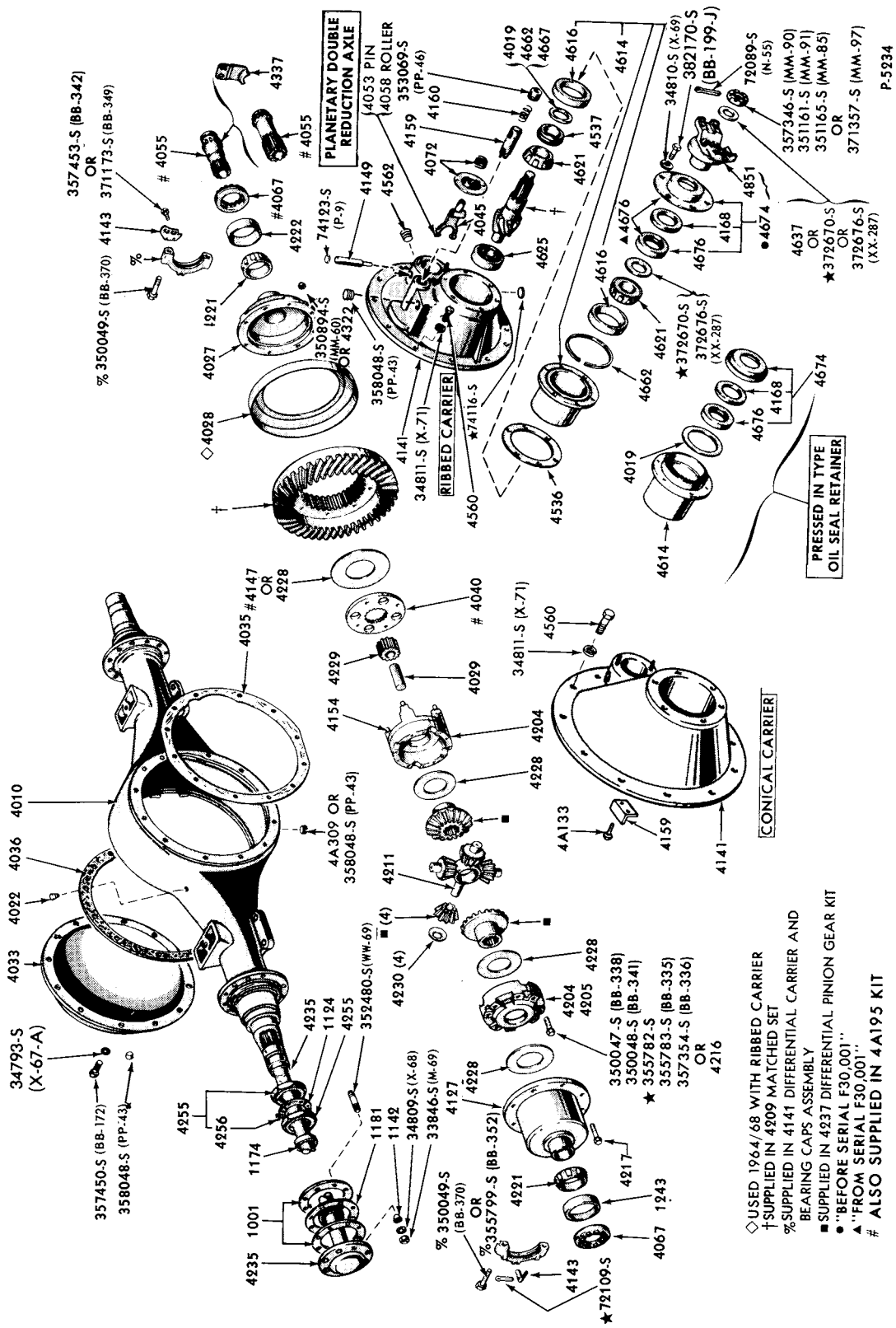

REAR AXLE (2 SPEED)-EATON 15201
1973/77 B-F500

COPYRIGHT © 1979 FORD MOTOR COMPANY—DEARBORN, MICHIGAN

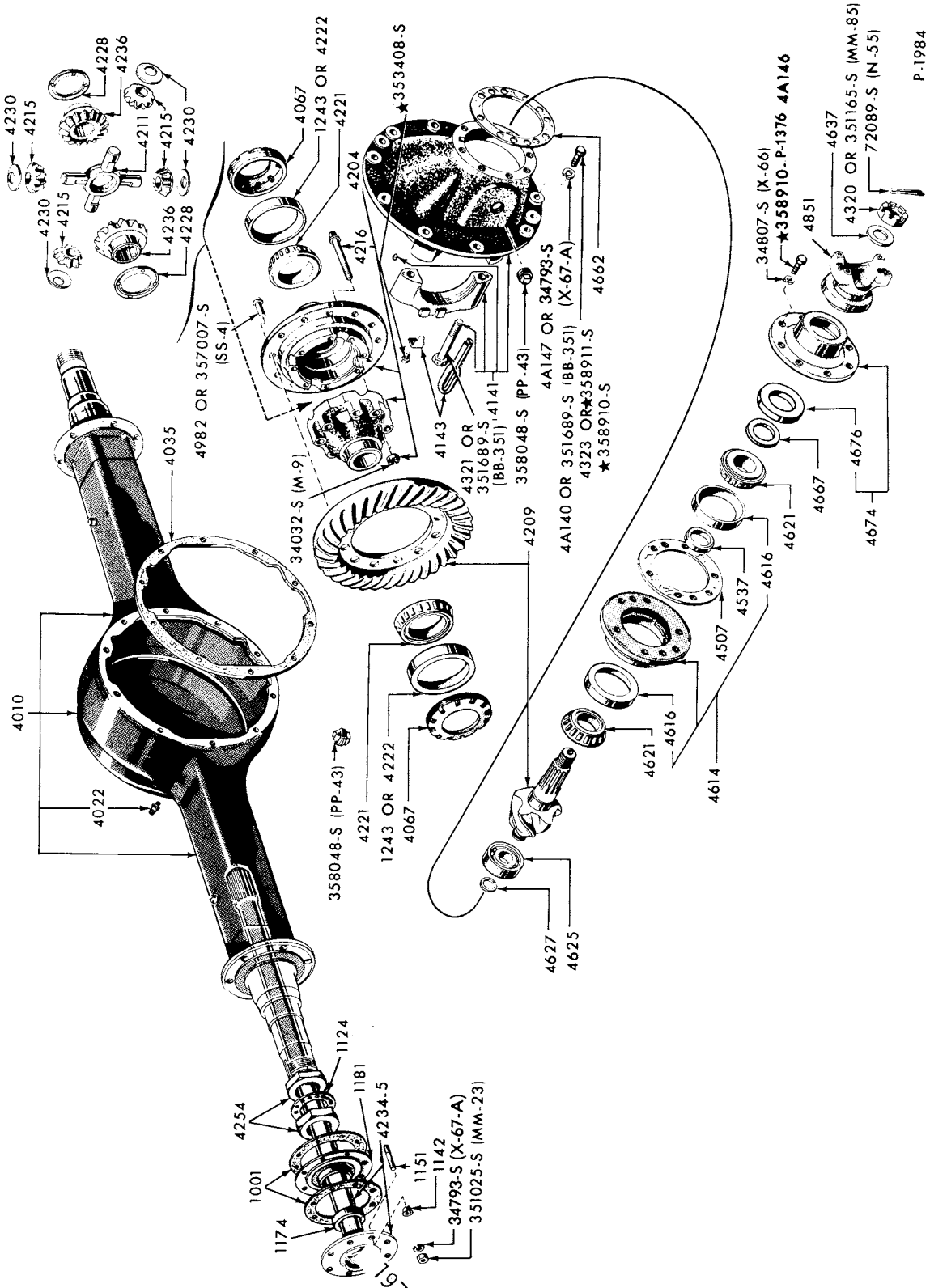

REAR AXLE (SINGLE SPEED)-ROCKWELL (TIMKEN) F106
1973/77 B-F500

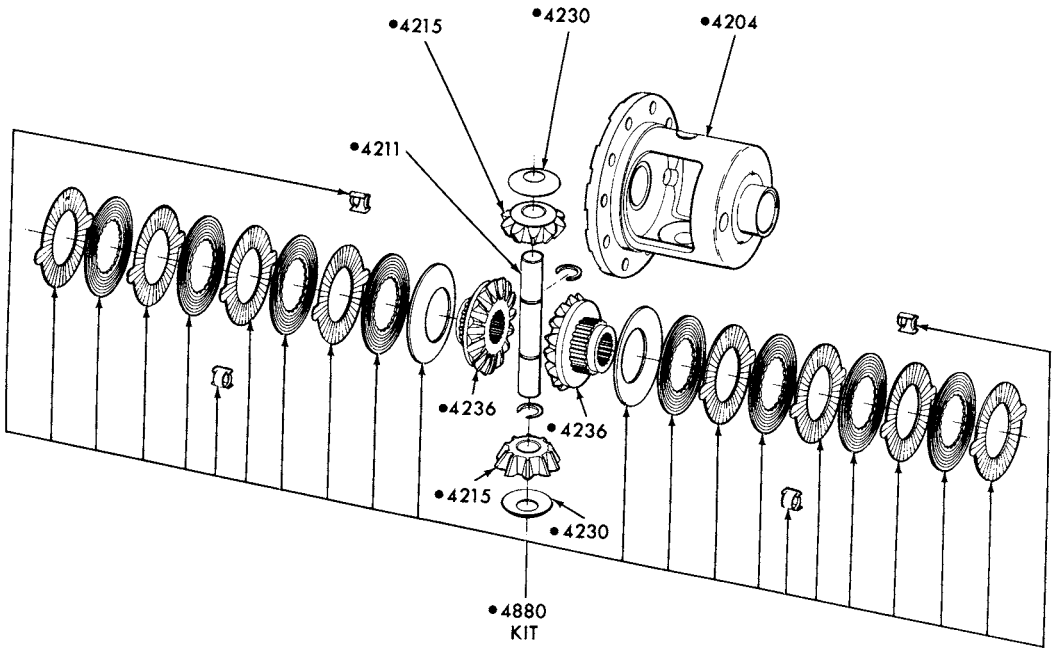

•ALSO SUPPLIED IN 4026 DIFFERENTIAL ASSY.

P-8311

LOCKING DIFFERENTIAL-DANA (SPICER)-MODEL 60
1973/ E350 and E-F250

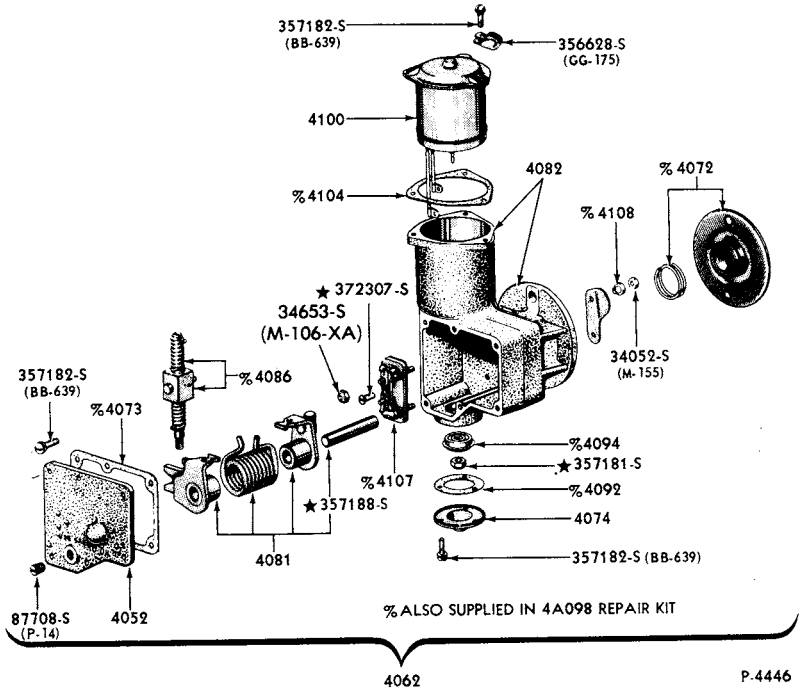

P-4446

SHIFT ASSY. (ELECTRIC - 2 SPEED AXLE)-EATON
1973/77 B-F500

COPYRIGHT © 1979 FORD MOTOR COMPANY-DEARBORN, MICHIGAN

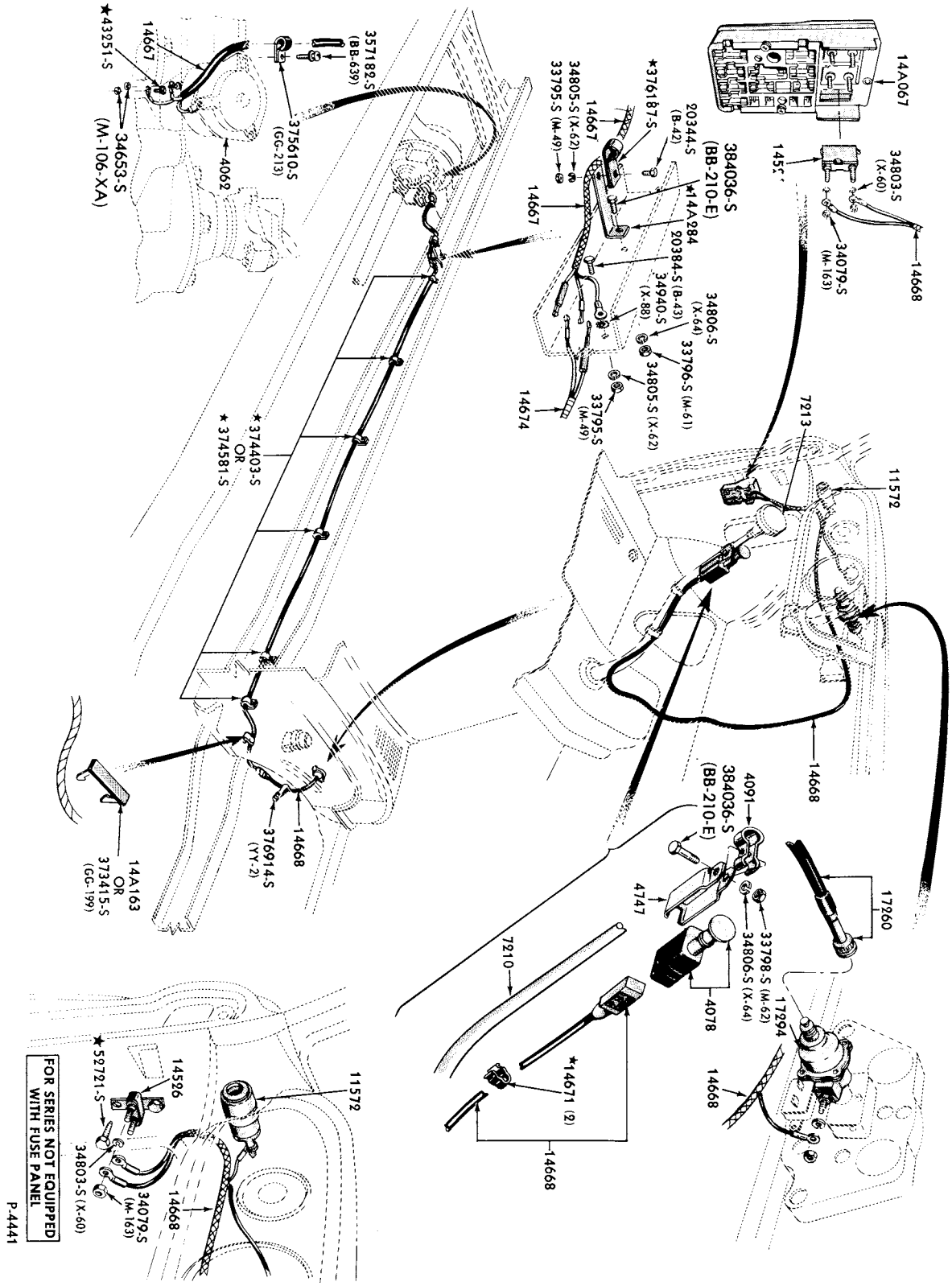

SHIFT SYSTEM (ELECTRIC - 2 SPEED AXLE)-EATON and ROCKWELL (TIMKEN)
1973/77 B-F500

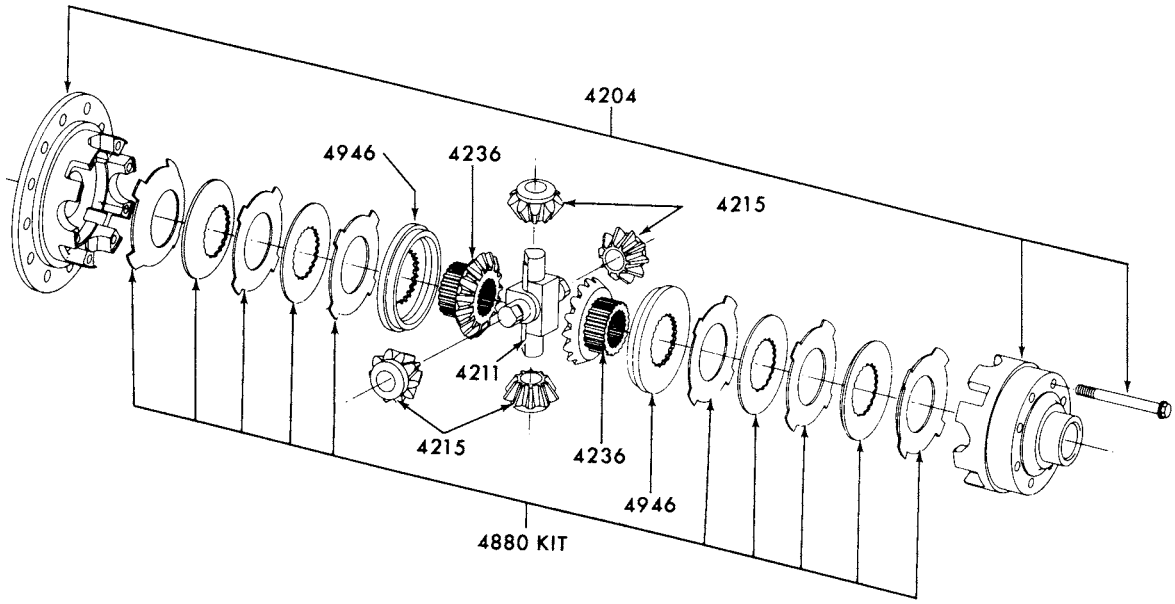

LOCKING DIFFERENTIAL-DANA (SPICER)-MODEL 70
1973/ E350 and F250/350

P-8722

COPYRIGHT © 1979 FORD MOTOR COMPANY

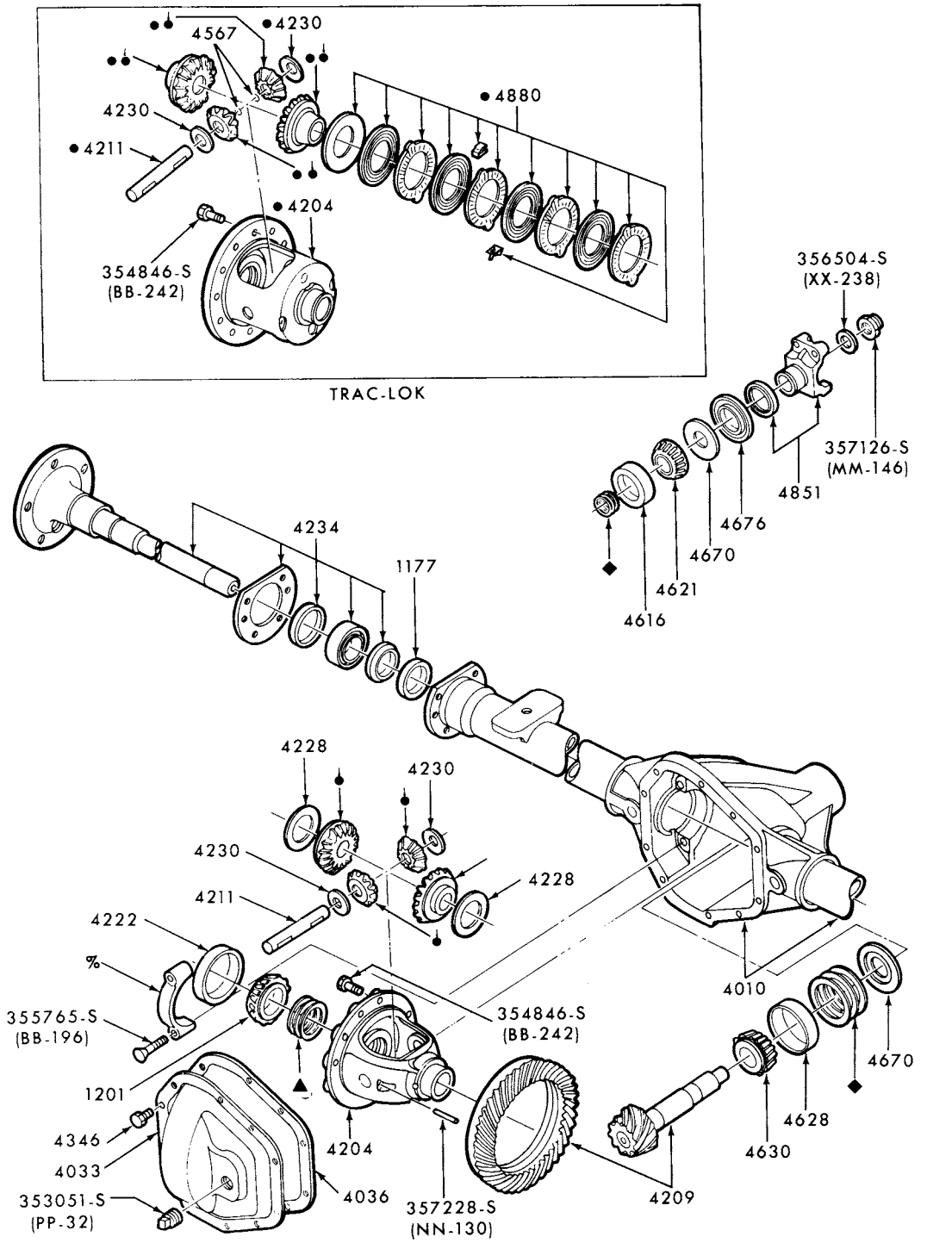

SUPPLIED IN 4215 KIT
• ALSO SUPPLIED IN 4026 CASE ASSY. DIFFERENTIAL KIT
% SUPPLIED IN 4010 AXLE HOUSING
▲ SUPPLIED IN 4067 BEARING ADJUSTING SHIM KIT
◆ SUPPLIED IN 4067 DIFFERENTIAL AND PINION SHIM KIT

P-15009

REAR AXLE (SINGLE SPEED) - DANA(SPICER) 44-3 (NON-LOCKING and LOCKING)
1977/78 F100

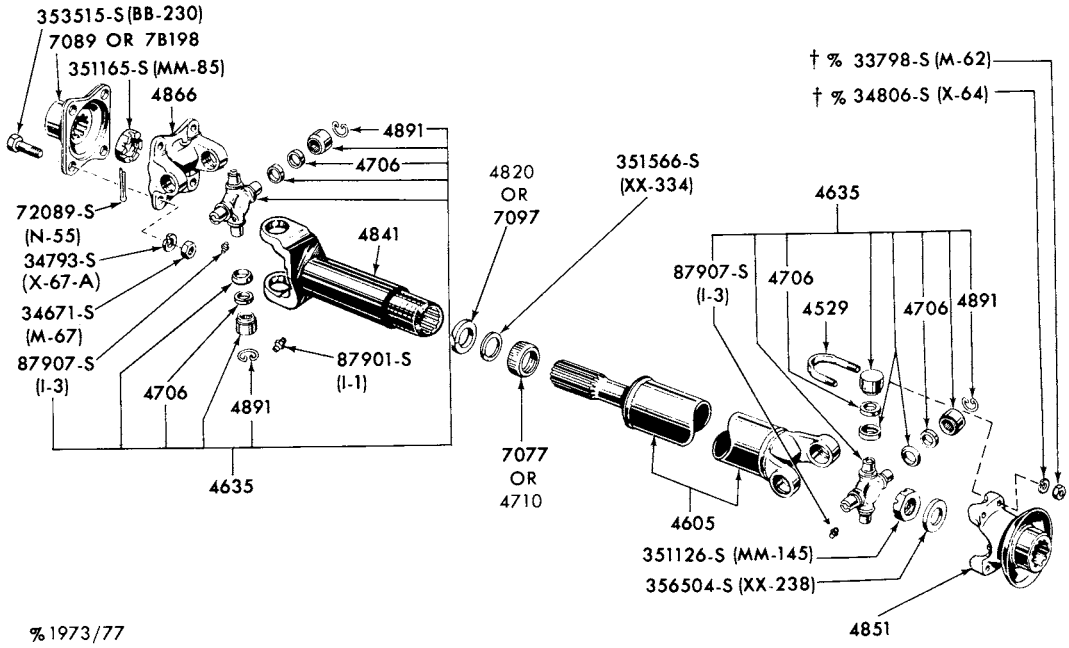

% 1973/77
† 1978/ 34977-S (M-89-CG) 1350
OR
34976-S (M-89-CB) 1310/1330

DRIVESHAFT (SHORT WHEEL BASE)-TYPICAL
1973/ E-F-P100/350

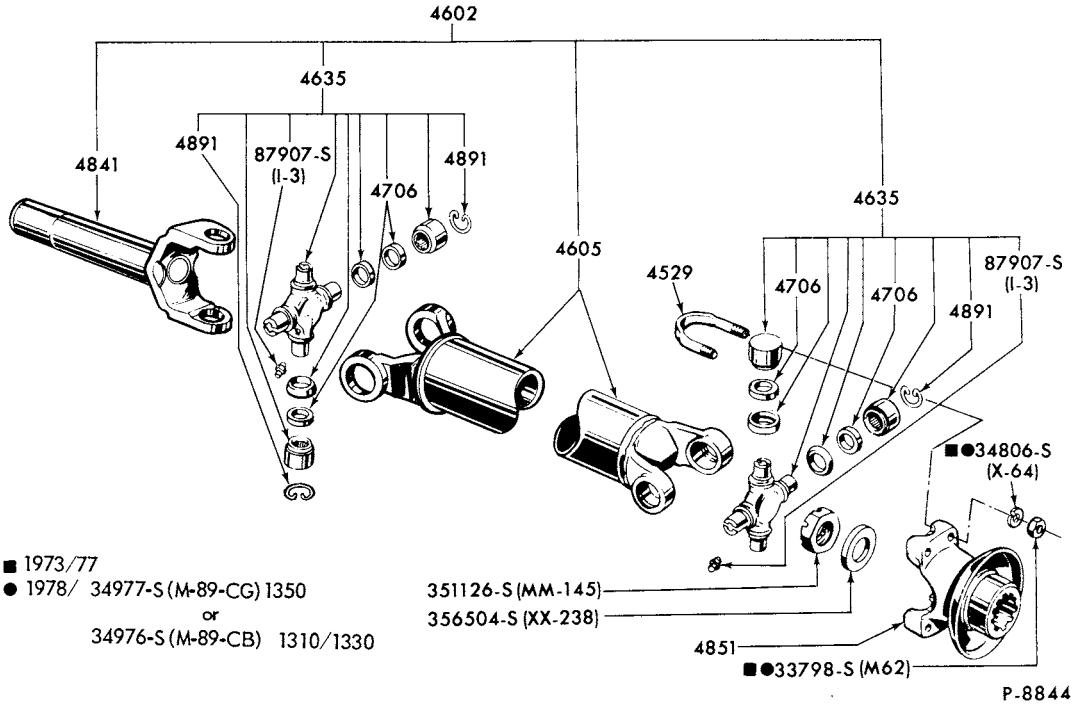

■ 1973/77
● 1978/ 34977-S (M-89-CG) 1350
or
34976-S (M-89-CB) 1310/1330

DRIVESHAFT (AUTOMATIC TRANSMISSION)
1973/ E-F100/350

COPYRIGHT © 1979 FORD MOTOR COMPANY — DEARBORN, MICHIGAN

1973/79 TRUCK SERIES 100/500

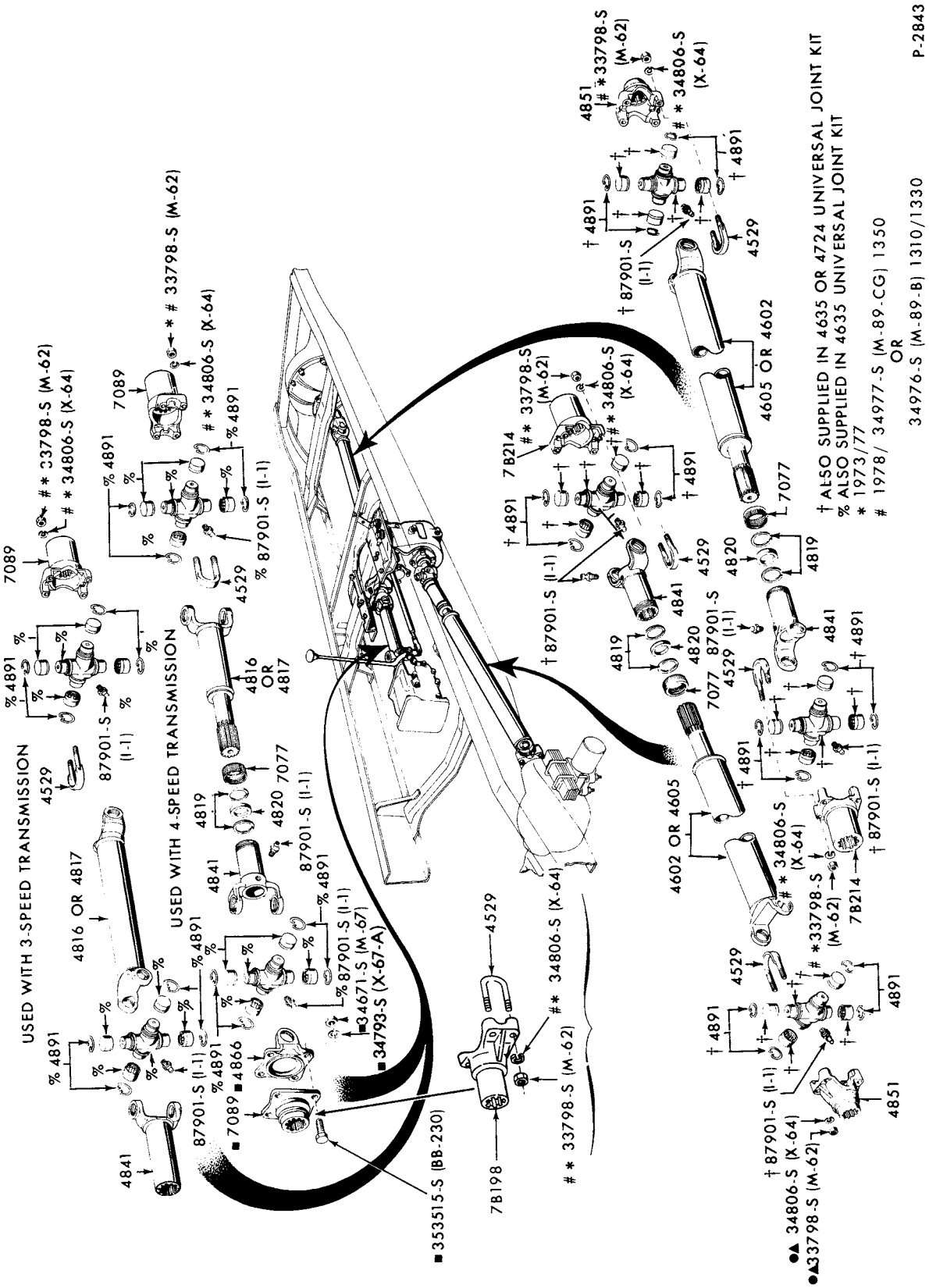

DRIVESHAFT and COUPLING SHAFT
1973/77 F250--4/W/D

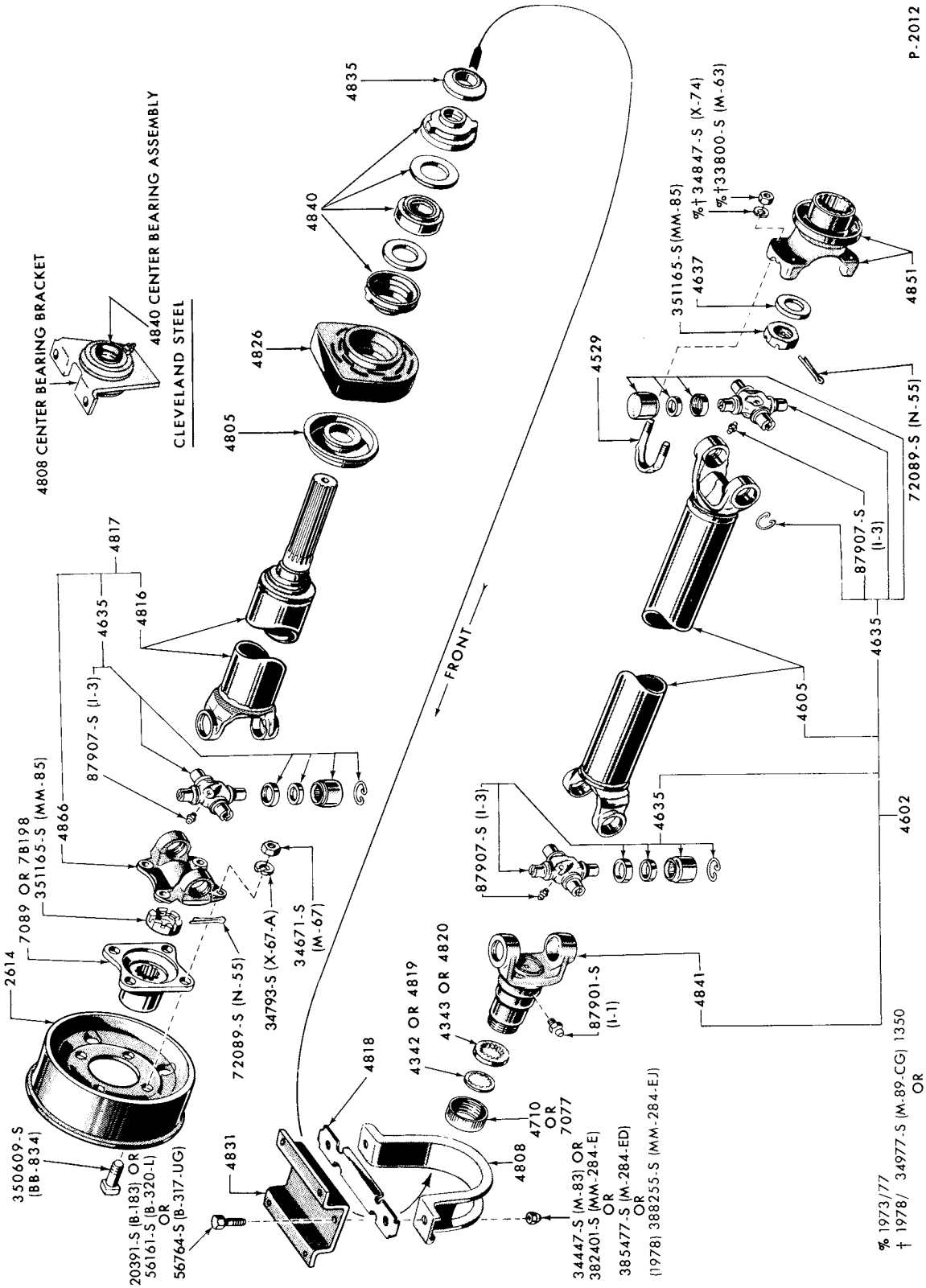

DRIVESHAFT and COUPLING SHAFT-TYPICAL
1973/ F100/350 and 1973/77 P450/500

COPYRIGHT © 1979 – FORD MOTOR COMPANY – DEARBORN, MICHIGAN

1973/79 TRUCK SERIES 100/500

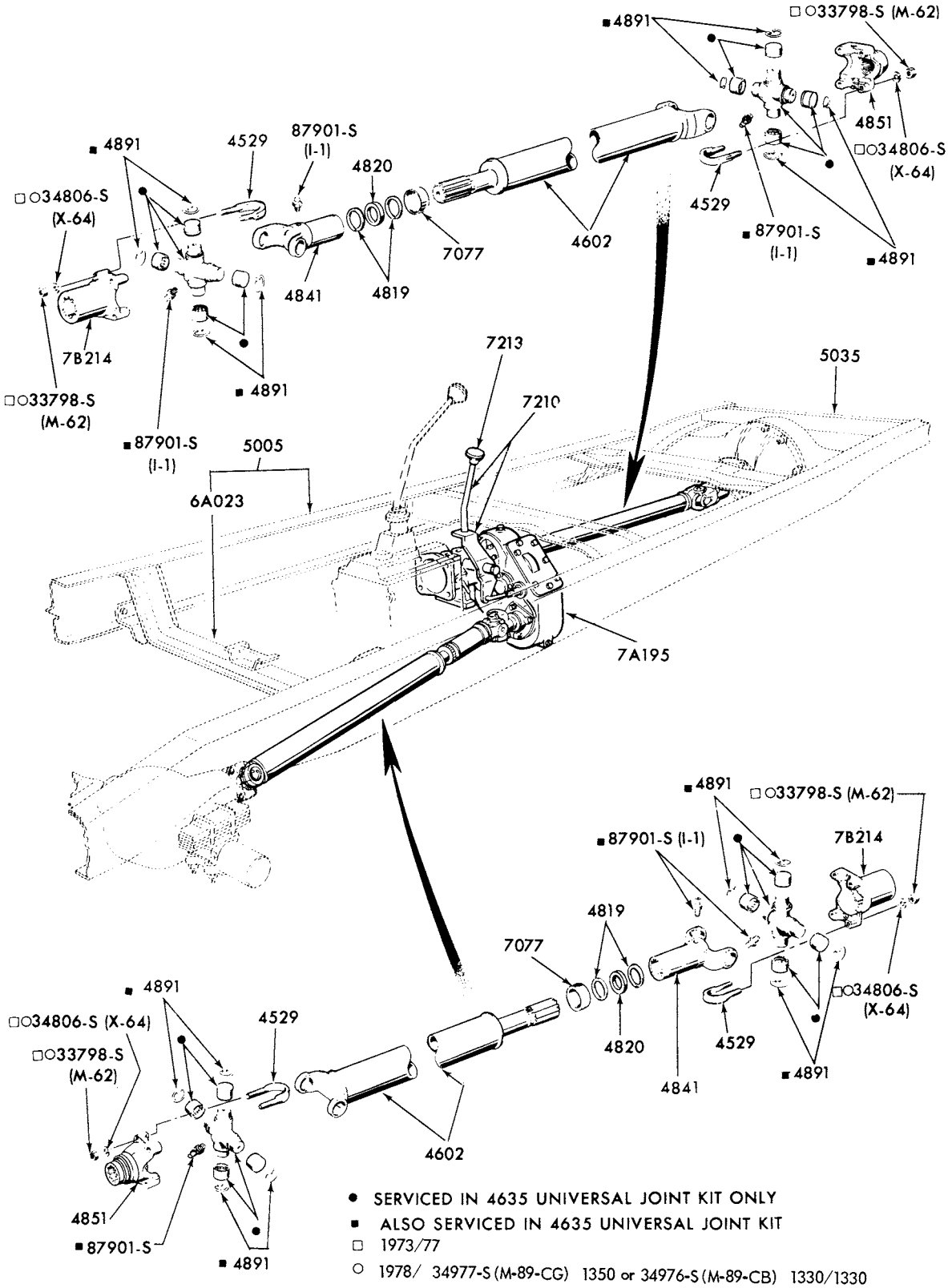

● SERVICED IN 4635 UNIVERSAL JOINT KIT ONLY
■ ALSO SERVICED IN 4635 UNIVERSAL JOINT KIT
□ 1973/77
○ 1978/ 34977-S (M-89-CG) 1350 or 34976-S (M-89-CB) 1330/1330

DRIVESHAFT (SINGLE CARDAN) P-10740

1973/76 F100--4/W/D, 1976/ F150--4/W/D and
1977/ F250--4/W/D and 1979 F350--4/W/D

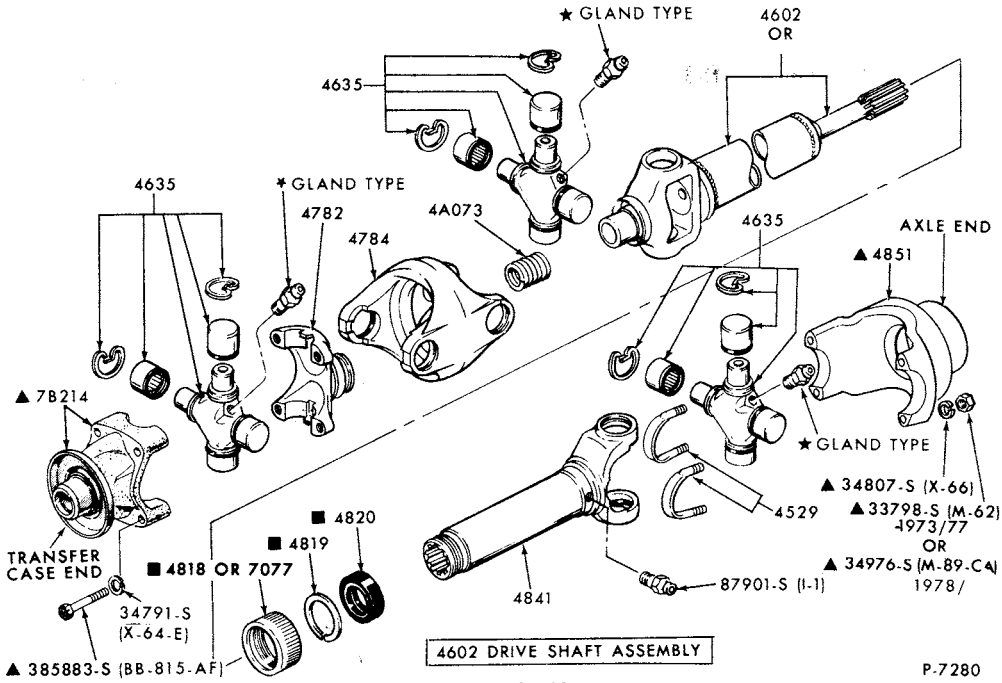

▲ NOT INCLUDED IN 4602 ASSY.
■ OR ONE PIECE DUST CAP 4710 , SEE SLIP YOKE RELATED PARTS CHART

DRIVESHAFT (DOUBLE CARDAN)

1973/76 F100--4/W/D, 1976/ F150--4/W/D, 1973/ F250--4/W/D and 1979 F350--4/W/D

COPYRIGHT © 1980 FORD MOTOR COMPANY, DEARBORN, MICHIGAN

INDEX

THIS INDEX SECTION INCLUDES THE FOLLOWING MAJOR GROUPS

EXHAUST SYSTEM
FRAME
FRONT SUSPENSION
REAR SUSPENSION

YEAR 19__	TITLE	MODEL	SECTION	PAGE	ILLUS. NO.
	B SERIES				
73/77		B500	52	1	P-11112
	FRAME				
73/77	Frame	B500	50	1	P-11999
73/77	Front end mounts and body mounts	B500	50	7	P-8655
	FRONT SUSPENSION (SPRINGS and SHOCK ABSORBERS)				
73/77	Springs and shock absorbers	B500	53	1	P-5857
	REAR SUSPENSION (SPRINGS and SHOCK ABSORBERS)				
73/77		B500	53	5	P-10589
	E SERIES				
	CROSS MEMBER PARTS				
73/74	Lower body No. 2 cross member parts	E100/300	50	4	P-8060
	EXHAUST SYSTEM				
73/74	6 cyl. 240,300	E100/300	52	2	P-6381
73/74	8 cyl. 302	E100/300	52	3	P-6382
75/78	6 cyl. 300--w/converter	E100/350	52	23	P-12648
75/78	8 cyl. 351--w/converter	E100/350 and 124" W/B	52	24	P-12649
75/78	8 cyl. 351--w/converter	E100/350 and 138" W/B	52	27	P-12650
75/78	8 cyl. 460	E250/350	52	25	P-11657
79	6 cyl. 300--w/converter	E100/350	52	52	P-14857
79	6 cyl. 300--w/o converter	E350	52	53	P-14858
79	8 cyl. 302--w/converter	E100/250	52	51	P-14856
79	8 cyl. 351W--w/converter	E100/350	52	54	P-14859
79	8 cyl. 460--w/converter	E250	52	56	P-14861
79	8 cyl. 460--w/o converter	E350	52	55	P-14860
	FRAME				
75/	Frame	E100/350	50	14	P-12162
75/	Body mounts installation	E100/350	50	15	P-11454
75/	Body spacer installation	E250/350(Cutaway)	50	16	P-12836
	FRONT SUSPENSION (SPRINGS and SHOCK ABSORBERS)				
73/74		E100/300	30	2	P-10160-A
75/		E100/350	30 30	10 11	P-12047-A P-12047-B
75/	Front stabilizer	E100/350	53	15	P-11666
	REAR SUSPENSION (SPRINGS and SHOCK ABSORBERS)				
73/74		E100/300	53	6	P-6363
75/		E100/150	53	16	P-11489
75/78		E250/350	53	17	P-11615
79		E250/350	53	16	P-11489

COPYRIGHT © 1979 — FORD MOTOR COMPANY —DEARBORN, MICHIGAN

INDEX

YEAR 19__	TITLE	MODEL	SECTION	PAGE	ILLUS. NO.
	F SERIES				
	EXHAUST SYSTEM				
73/74	6 & 8 cyl.240,300,302, 360 and 390-2/B	F100/250(Regular Cab) --2/W/D	52	4	P-5215
75/76	6 & 8 cyl. 300,302,360,390	F100 (Regular Cab)--2/W/D	52	21	P-12014
75/76	6 & 8 cyl. 300,360,390 --w/converter	F100 (Super Cab)--2/W/D	52	22	P-12015
75/76	6 & 8 cyl. 300,360 --w/converter	F100 (Regular Cab)--4/W/D	52	21	P-12014
75/76	6 & 8 cyl. 300,360	F150/250 (Regular Cab)--2/W/D	52	29	P-12652
75/76	8 cyl. 390,460	F150/250 (Regular Cab)	52	30	P-12653
74/76	6 & 8 cyl.300,360,390-2/B	F250/350 (Crew Cab)	52	15	P-11246
73/74	8 cyl.360,390-2/B	F350--140" W/B	52	6	P-10029
73/74	6 cyl.300, 8 cyl.360,390-2/B	F350(Regular Cab)--136",160" W/B	52	5	P-5837
74	6 & 8 cyl.300,360	F100/250(Super Cab) --2/W/D & 139",155" W/B	52	18	P-11538
	8 cyl. 390		52	19	P-11539
	8 cyl. 460		52	20	P-11540
74	8 cyl.390-4/B	F250 (Regular Cab)	52	8	P-11241
74	8 cyl. 390-4/B	F350	52	9	P-11242
73/74		F100--4/W/D	52	4	P-5215
73/74		F250(Regular Cab)--4/W/D	52	5	P-5837
74	8 cyl. 460	F100--2/W/D & 116" W/B	52	12	P-10987
73	8 cyl. 460	F250(Regular Cab)--2/W/D	52	10	P-10504
73	8 cyl. 460	F350	52	11	P-10505
74	8 cyl. 460	F100/250(Regular Cab) --2/W/D & 133" W/B	52	13	P-10988
74/76	8 cyl. 460	F250/350(Super Camper Special & Regular Cab) --2/W/D & 137",140" & 160" W/B	52	14	P-10991
74	8 cyl. 460	F100/250(Super Cab) --2/W/D & 139",155" W/B	52	20	P-11540
74	8 cyl. 390--4/B	F100/250(Super Cab) --2/W/D & 139",155" W/B	52	19	P-11539
75/76	6 cyl.300 and 8 cyl.360,390,460	F150/350(Super Cab)-(Page A)	52	33	P-12656
75/76	6 cyl.300 and 8 cyl.360,390,460	F150/350(Super Cab)-(Page B)	52	34	P-12657
75/76	6 cyl. 300 and 8 cyl. 360	F250(Regular Cab)--4/W/D	52	28	P-12651
75/76	6 cyl.300 and 8 cyl. 360,390	F350(Regular Cab)-(Page A)	52	31	P-12654
75/76	6 cyl.300 and 8 cyl.360,390	F350(Regular Cab)-(Page B)	52	32	P-12655

INDEX

YEAR 19__	TITLE	MODEL	SECTION	PAGE	ILLUS. NO.
	F SERIES				
	EXHAUST SYSTEM - cont'd.				
77/78	6 cyl. 300	F100/350(Regular Cab) --2/W/D and F150/250 (Regular Cab)--4/W/D	52	35	P-13348
77/78	6 cyl. 300--w/converter	F100/350(Regular Cab) --2/W/D and F150/250 (Regular Cab)--4/W/D	52	36	P-13349
77/78	6 cyl. 300--w/converter	F250(Regular Cab) --4/W/D	52	37	P-13350
77/78	6 cyl. 300--w/converter	F350(Regular Cab)	52	38	P-13351
77/78	6 cyl. 300	F100/250(Super Cab) --2/W/D	52	39	P-13352
77/78	6 cyl. 300--w/converter	F100/250(Super Cab) --2/W/D	52	40	P-13353
77/78	8 cyl. 302--w/converter	F100(Regular Cab) --2/W/D	52	41	P-13354
77/78	8 cyl. 351M,400	F100/350(Regular Cab) --2/W/D	52	42	P-13355
77/78	8 cyl. 351M,400 --w/converter	F100/250(Regular Cab) --2/W/D	52	43	P-13356
77/78	8 cyl. 351M,400 --w/converter	F350(Regular Cab)	52	44	P-13357
77/78	8 cyl. 351M,400	F100/350(Super Cab) --2/W/D	52	45	P-13358
77/78	8 cyl. 351M,400 --w/converter	F100/350(Super Cab) --2/W/D	52	46	P-13359
77/78	8 cyl. 351M,400	F150(Regular Cab) --4/W/D	52	47	P-13360
77/78	8 cyl. 351M,400 --w/converter	F150(Regular Cab) --4/W/D	52	48	P-13361
77/78	8 cyl. 351M,400	F250(Regular Cab) --4/W/D	52	49	P-13362
77/78	8 cyl. 351M,400 --w/converter	F250(Regular Cab) --4/W/D	52	50	P-13363
79	6 cyl. 300--w/converter	F100/250(Regular Cab) --2/W/D, F150/250 (Regular Cab)--4/W/D	52	63	P-14869
79	6 cyl. 300--w/converter	F100/250(Super Cab) --2/W/D	52	65	P-14871
79	6 cyl. 300--w/o converter	F350(Regular Cab) --2/W/D	52	64	P-14870
79	8 cyl. 302--w/converter	F100/150(Regular Cab) --2/W/D	52	62	P-14868
79	8 cyl. 302--w/converter	F150(Super Cab) --2/W/D	52	61	P-14867
79	8 cyl. 351M,400--w/converter	F100/250(Regular Cab) --2/W/D	52	57	P-14862
79	8 cyl. 351M,400--w/converter	F100/350(Super Cab) --2/W/D	52	59	P-14864
79	8 cyl. 351M,400--w/o converter	F100/350(Super Cab) --2/W/D	52	55	P-14865
79	8 cyl. 351M,400--w/converter	F150/250(Regular Cab) --4/W/D	52	60	P-14866

COPYRIGHT © 1980— FORD MOTOR COMPANY —DEARBORN, MICHIGAN

INDEX

F SERIES

YEAR 19__	TITLE	MODEL	SECTION	PAGE	ILLUS. NO.
	EXHAUST SYSTEM - cont'd.				
79	8 cyl.351M,400--w/converter	F150/250(Super Cab) --4/W/D	52	70	P-14876
79	8 cyl. 351M,400--w/o converter	F350(Regular Cab) --2/W/D	52	58	P-14683
79	8 cyl. 460--w/converter	F150/250(Regular Cab) --2/W/D	52	66	P-14872
79	8 cyl. 460--w/converter	F150/250(Super Cab) --2/W/D	52	68	P-14874
79	8 cyl. 460-- w/o converter	F350(Regular Cab) --2/W/D	52	67	P-14873
79	8 cyl. 460--w/o converter	F350(Super Cab) --2/W/D	52	69	P-14875
73/75	6 cyl. 300-"Before Ser. V20,001"	F500(81)	52	7	P-5281
75/77	6 cyl. 300-"From Ser. V20,001"	F500(81)	52	26	P-11878
73/75	8 cyl. 330-"Before Ser. V20,001"	F500(81)	52	16	P-11111
75/77	8 cyl. 330-"From Ser. V20,001"	F500(81)	52	26	P-11879
73/77		F500(84)	52	1	P-11112
	FRAME				
73/	116", 133"	F100/250--2/W/D	50	3	P-9894
73/76	116" and 133" W/B	F100/150--4/W/D	50	3	P-9895
73/	133" and 150" W/B	F250/350--4/W/D	50	4	P-9896
73/	150" W/B	F250--2/W/D	50	12	P-11991
73/	136",140" and 160" W/B	F350(exc. Super Cab)	50	5	P-9897
74/	140" and 155" W/B	F100/350 (Super Cab)	50	9	P-11546
73/77		F500	50	1	P-11999
73/	Front end mounts and body mounts	F100/350 (exc.Super Cab)	50	6	P-9316
74/	Front end mounts and body mounts	F100/250 (Super Cab)	50	8	P-11232
73/77	Front end mounts and body mounts	F500	50	7	P-8655
	FRONT SUSPENSION (SPRINGS and SHOCK ABSORBERS)				
73/		F100/350--2/W/D	30 30	4 5	P-10321-A P-10321-B
73/75		F100--4/W/D	53	2	P-5123
76/77	Single shock-front suspension	F100/150--4/W/D	53	19	P-12741
78/	Single shock-front suspension	F150--4/W/D (Reg. Cab)	53	25	P-14977
78/	Dual shocks-front suspension	F150--4/W/D (Reg. Cab)	53	24	P-14040
73/77	"Before Ser. 420,001"	F250--4/W/D	53	3	P-11306
77/	"From Ser. 420,001"	F250/350--4/W/D	53	21	P-13384
73/77		F500	53	1	P-5857
73/74	Front stabilizer	F250--2/W/D and F350	53	18	P-9878
77/	Front stabilizer	F150--4/W/D(Super Cab), F250--4/W/D	53	20	P-13377
75/	Front stabilizer	F100/350--2/W/D	53	14	P-11907
78	Front stabilizer (Regular Cab)	F150--4/W/D	53	23	P-14038
73/	Auxiliary air springs-front	F100/350--4/W/D	53	8	P-10676
73/	Auxiliary air springs-front	F100/250--2/W/D	53	9	P-10677

INDEX

YEAR 19__	TITLE	MODEL	SECTION	PAGE	ILLUS. NO.
	F SERIES				
	REAR SUSPENSION (SPRINGS and SHOCK ABSORBERS)				
73/		F100/250(exc.Crew Cab)--2/W/D	53	7	P-10365
73/76		F250(Crew Cab)--2/W/D	53	11	P-10368
77/		F250/350--4/W/D	53	22	P-13388
73/76		F100--4/W/D	53	9	P-10367
73/76		F250--4/W/D	53	10	P-10366
73/		F350	53	11	P-10368
73/77		F500	53	5	P-10589
73/	Rear stabilizer	F250/350--2/W/D, 4/W/D	53	8	P-9879
	M SERIES				
	EXHAUST SYSTEM				
73/76		M450/500	52	17	P-11403
	FRAME				
73/76		M450/500	50	13	P-12020
	FRONT and REAR SUSPENSION				
	Refer to "P" Series for illustration				
	P SERIES				
	EXHAUST SYSTEM				
73/77		P350/500	52	12	P-5836
	FRAME				
73/76	Frame - 102" and 122" W/B	P350	50	10	P-12004
73/77	Frame - 137" W/B	P400/500	50	2	P-12005
73/77	Frame - 154" W/B	P500	50	11	P-12006
	FRONT SUSPENSION (SPRINGS and SHOCK ABSORBERS)				
73/77		P350/500	53	4	P-4153
	REAR SUSPENSION (SPRINGS and SHOCK ABSORBERS)				
73/76		P350	53	12	P-4583
73/77		P400/500	53	13	P-4580

COPYRIGHT © 1979 FORD MOTOR COMPANY — DEARBORN, MICHIGAN

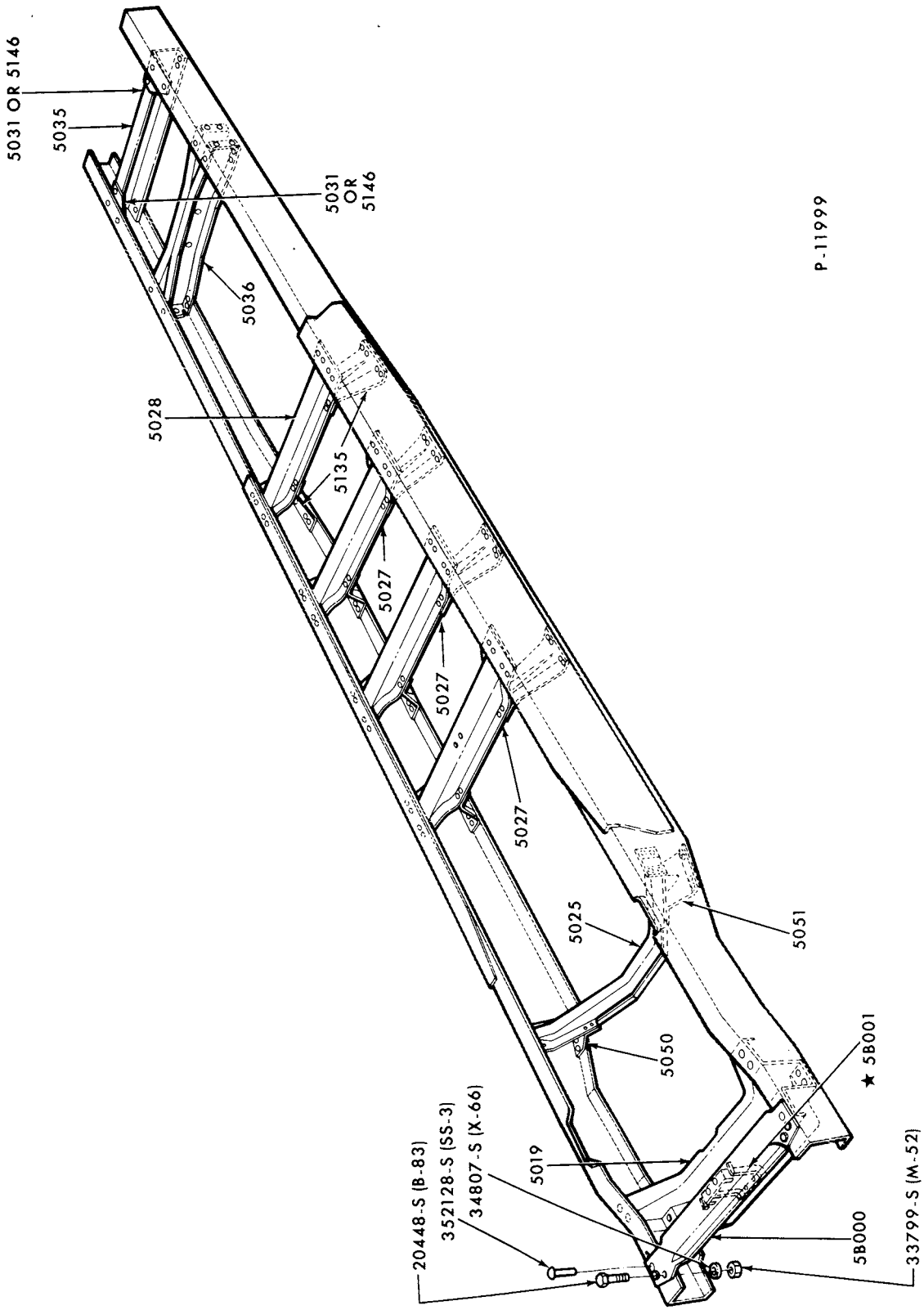

FRAME - TYPICAL
1973/77 B-F500

COPYRIGHT © 1979 FORD MOTOR COMPANY DEARBORN, MICHIGAN

1973/79 TRUCK SERIES 100/500

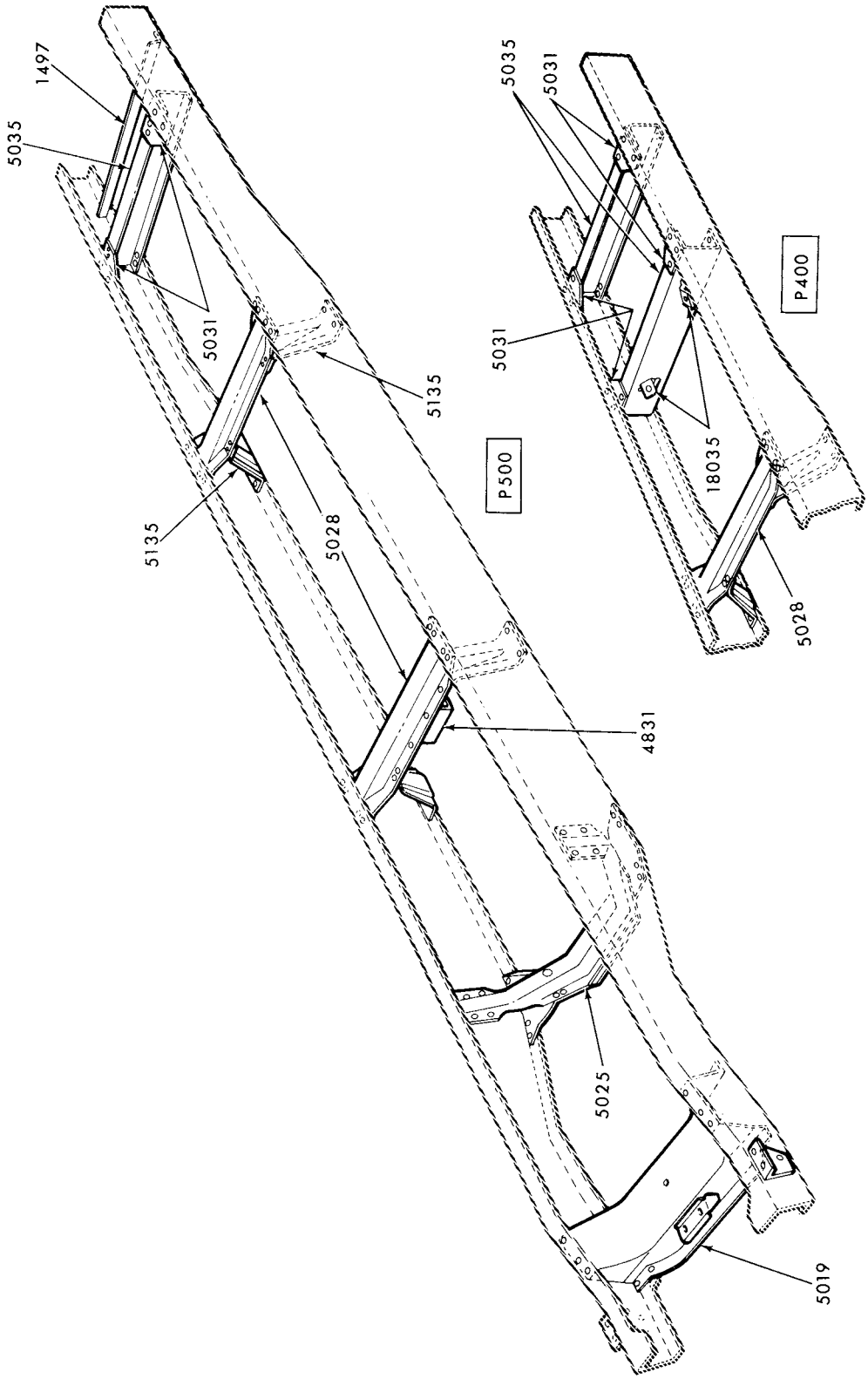

FRAME
1973/77 P400/500---137" W/B

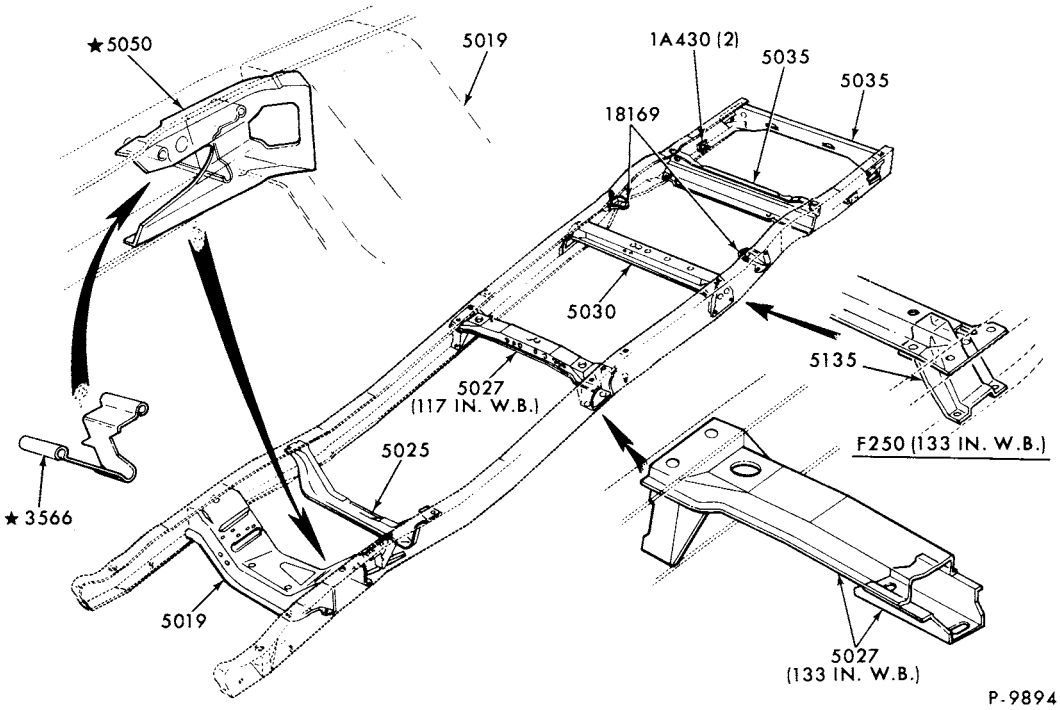

FRAME
1973/ F100/250--2/W/D (116", 133")

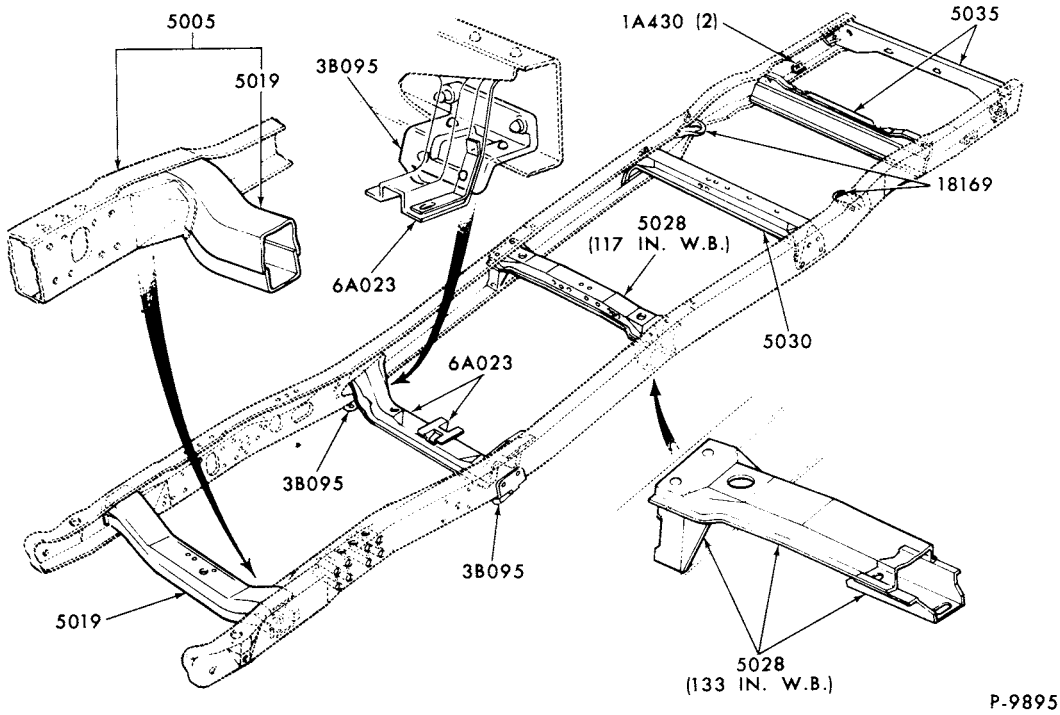

FRAME
1973/76 F100/150--4/W/D

COPYRIGHT © 1979 FORD MOTOR COMPANY—DEARBORN, MICHIGAN

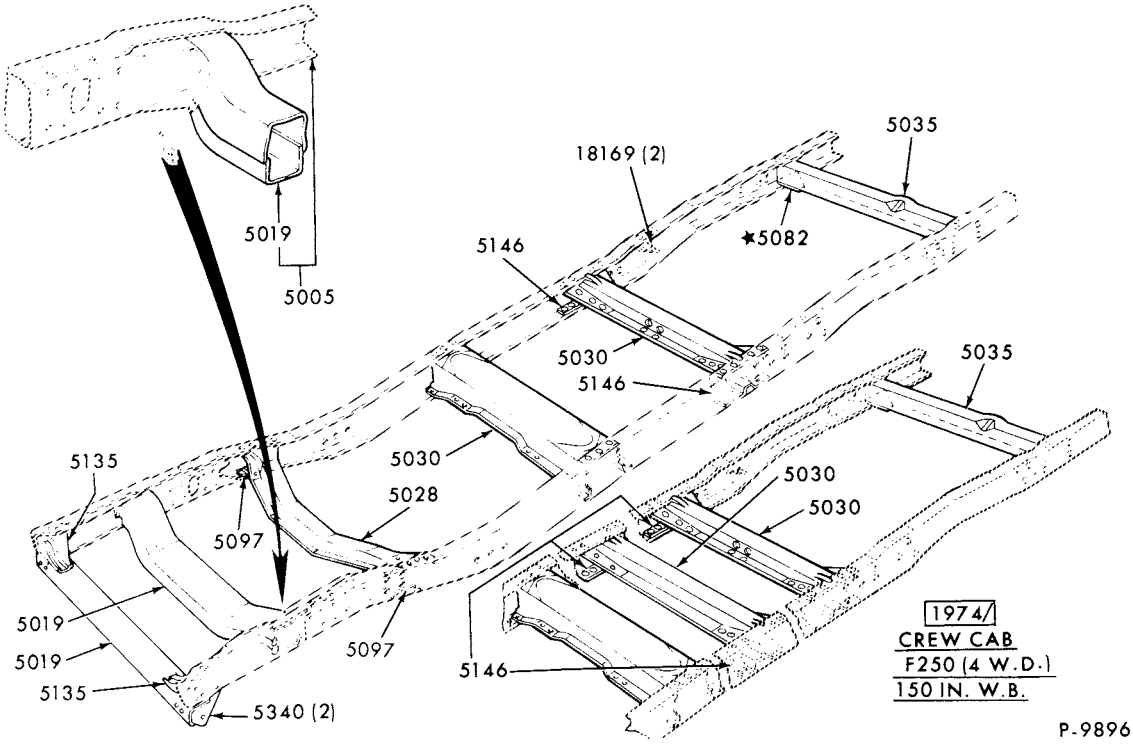

FRAME
1973/ F250/350--4/W/D

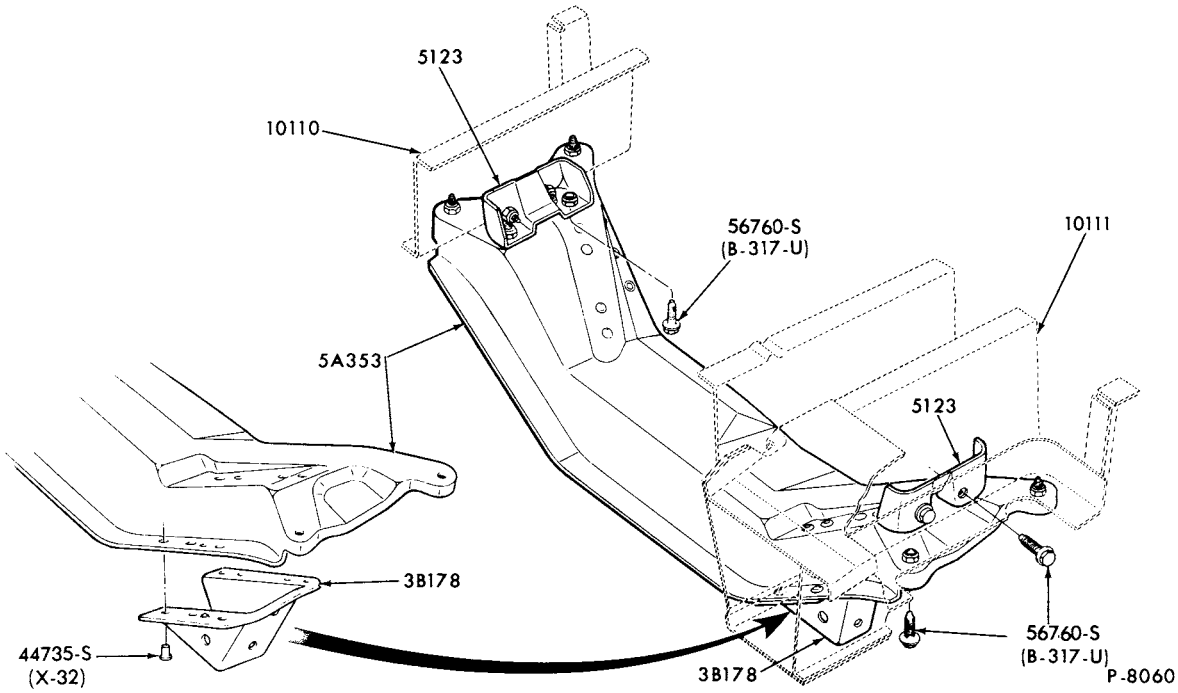

UNDER BODY NO. 2 CROSS MEMBER and RELATED PARTS
1973/74 E100/200

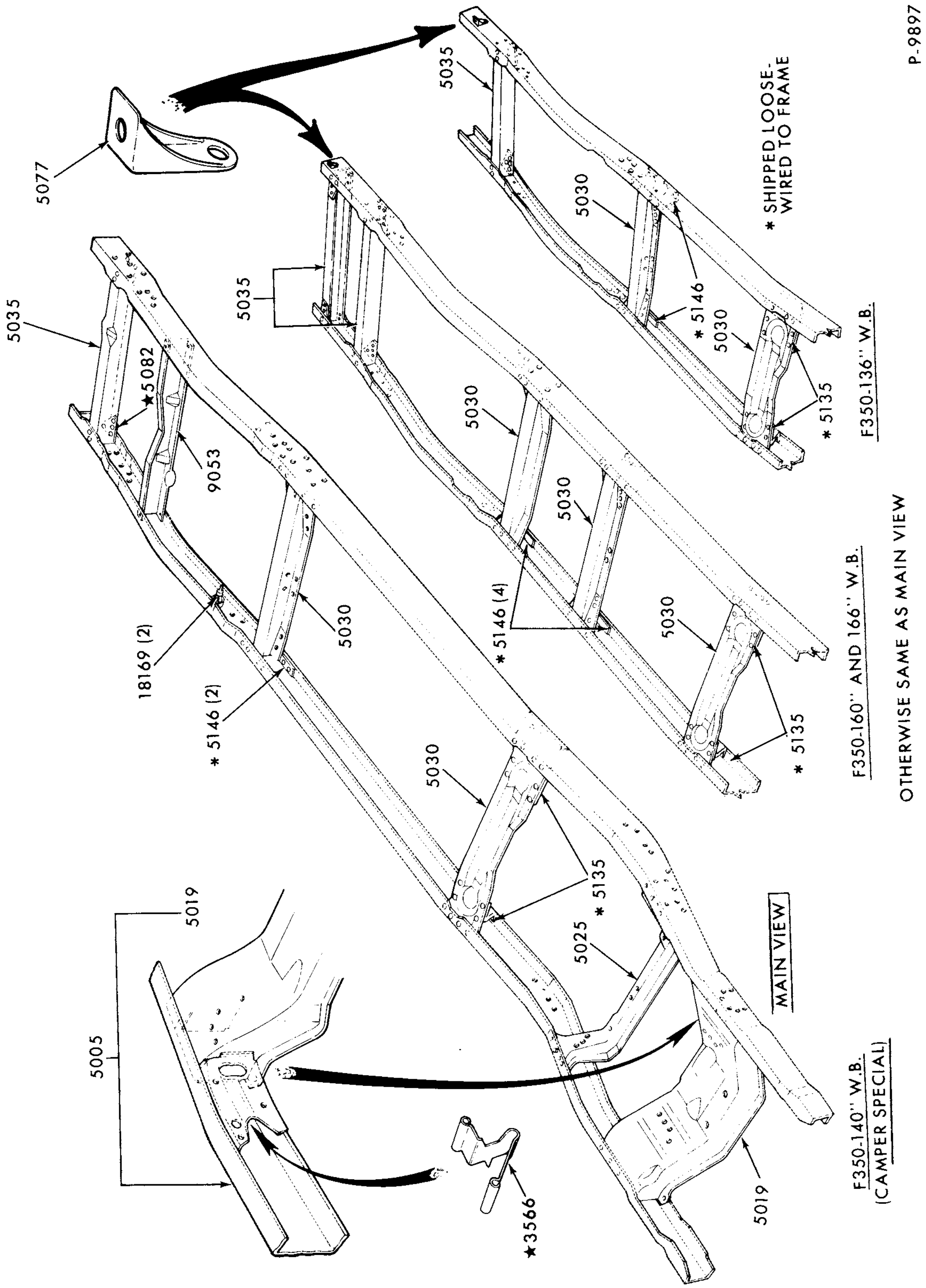

FRAME
1973/ F350 (EXC. SUPER CAB)

 COPYRIGHT © 1979 FORD MOTOR COMPANY—DEARBORN, MICHIGAN

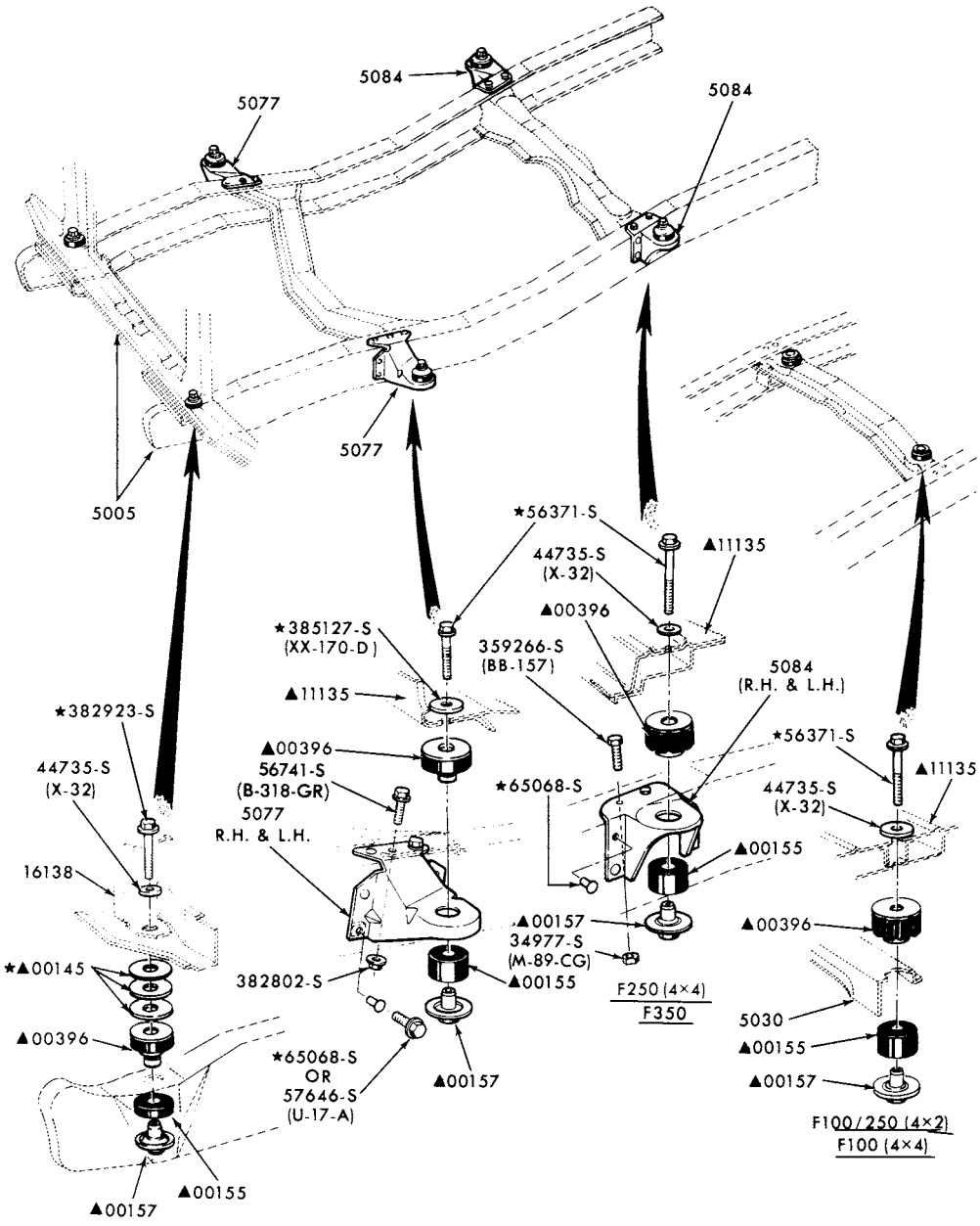

▲REFER TO GROUP NUMBER IN BODY SECTION

P-9316

FRONT END MOUNTS and BODY MOUNTS
1973/ F100/350 (EXC. SUPER CAB)

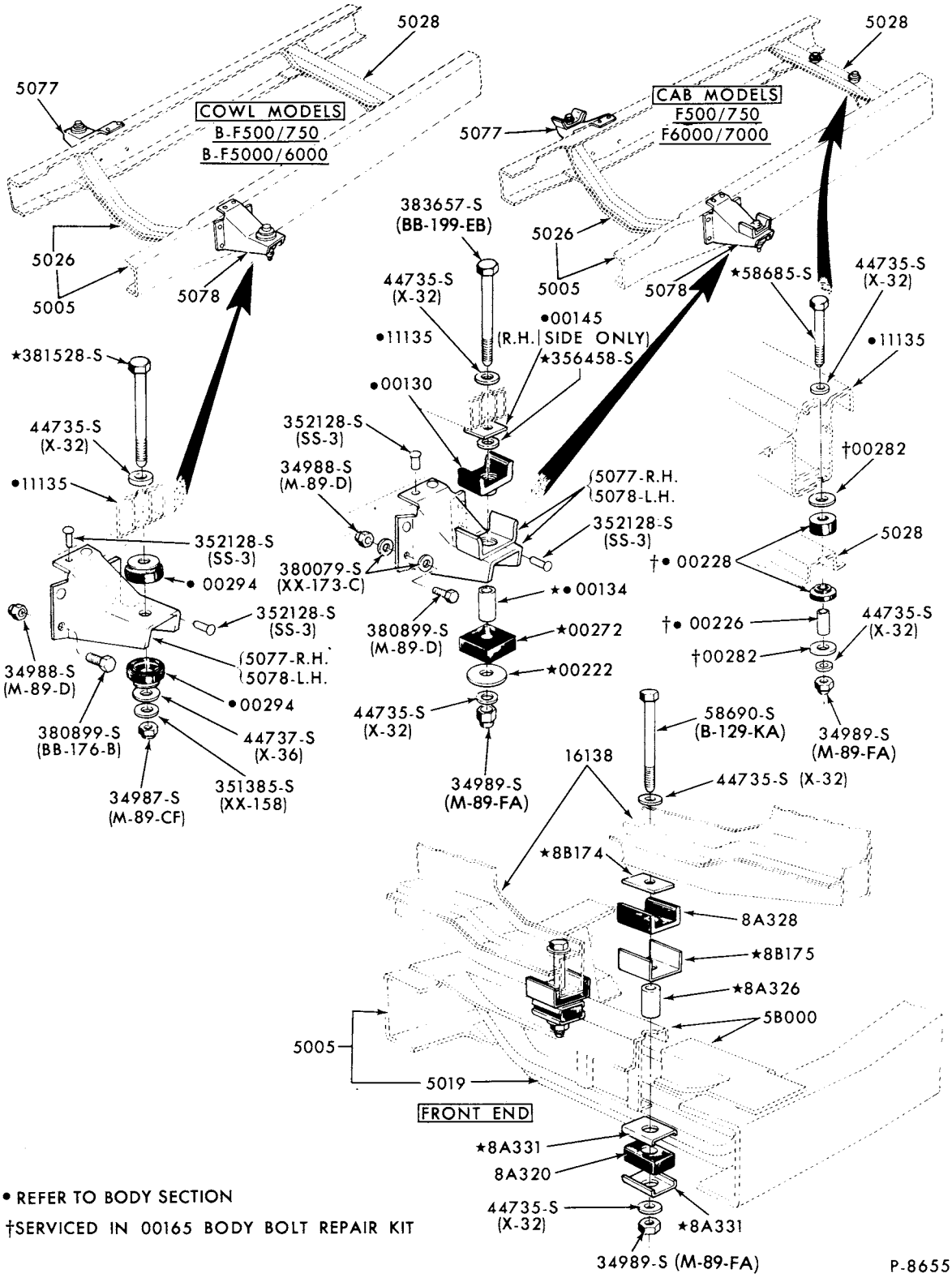

• REFER TO BODY SECTION

†SERVICED IN 00165 BODY BOLT REPAIR KIT

FRONT END MOUNTS and BODY MOUNTS
1973/77 B-F500

COPYRIGHT © 1979 FORD MOTOR COMPANY—DEARBORN, MICHIGAN

1973/79 TRUCK SERIES 100/500

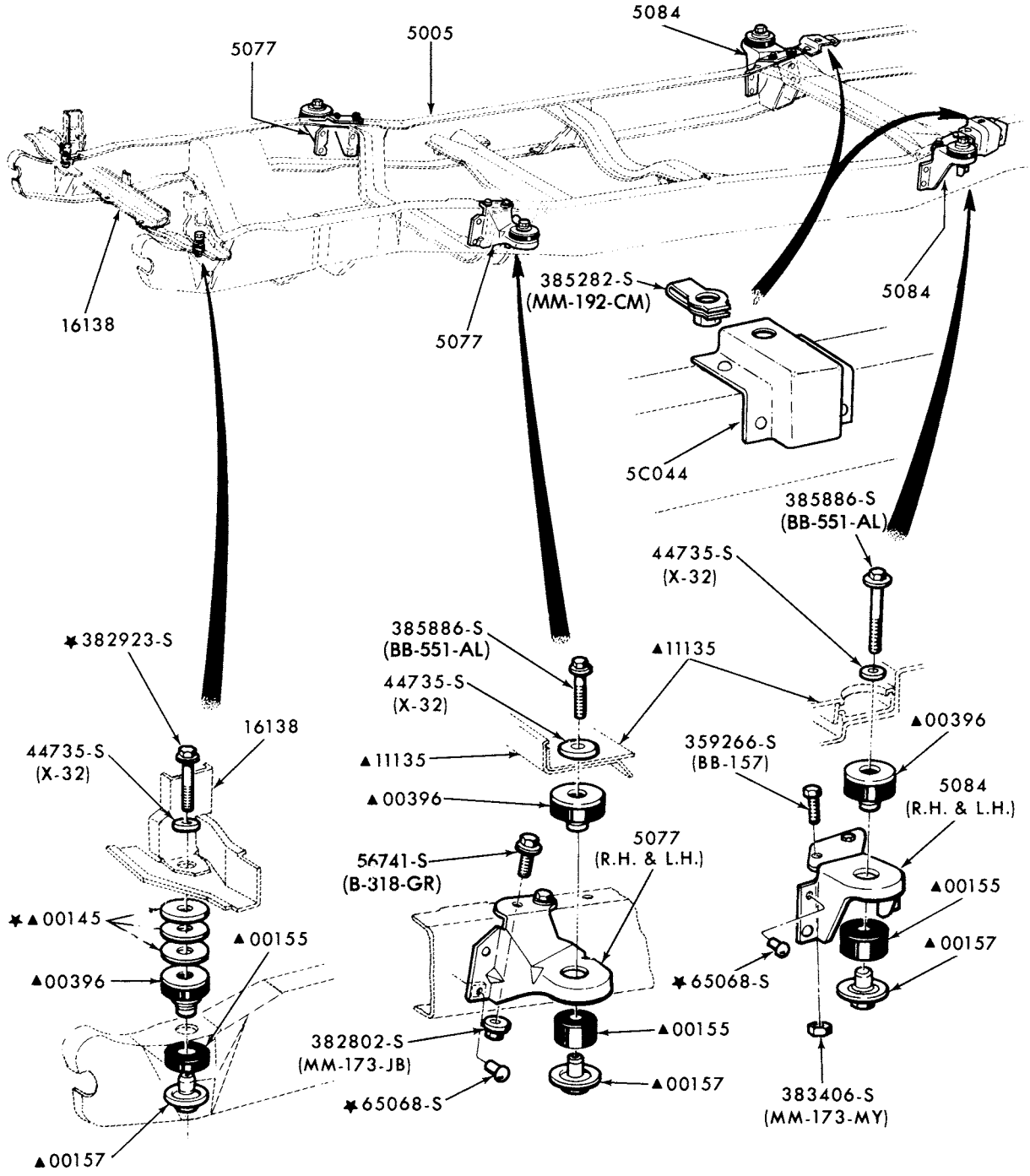

▲REFER TO GROUP NUMBER IN BODY SECTION

P-11232

FRONT END MOUNTS and BODY MOUNTS
1974/ F100/250 (SUPER CAB)

P-11546

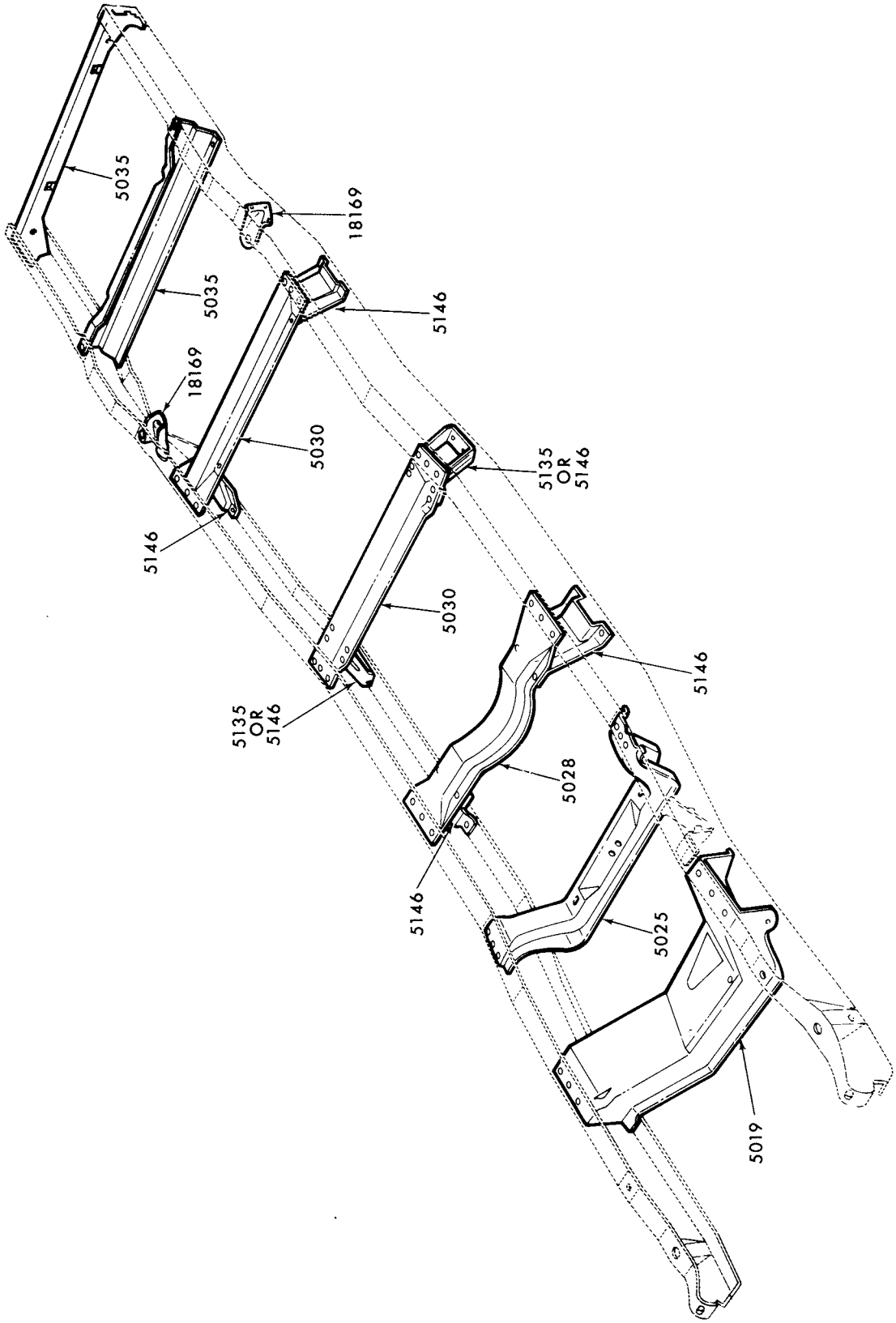

FRAME ASSY.
1974/ F100/350 (SUPER CAB)--140" and 155" W/B

COPYRIGHT © 1979 FORD MOTOR COMPANY DEARBORN, MICHIGAN

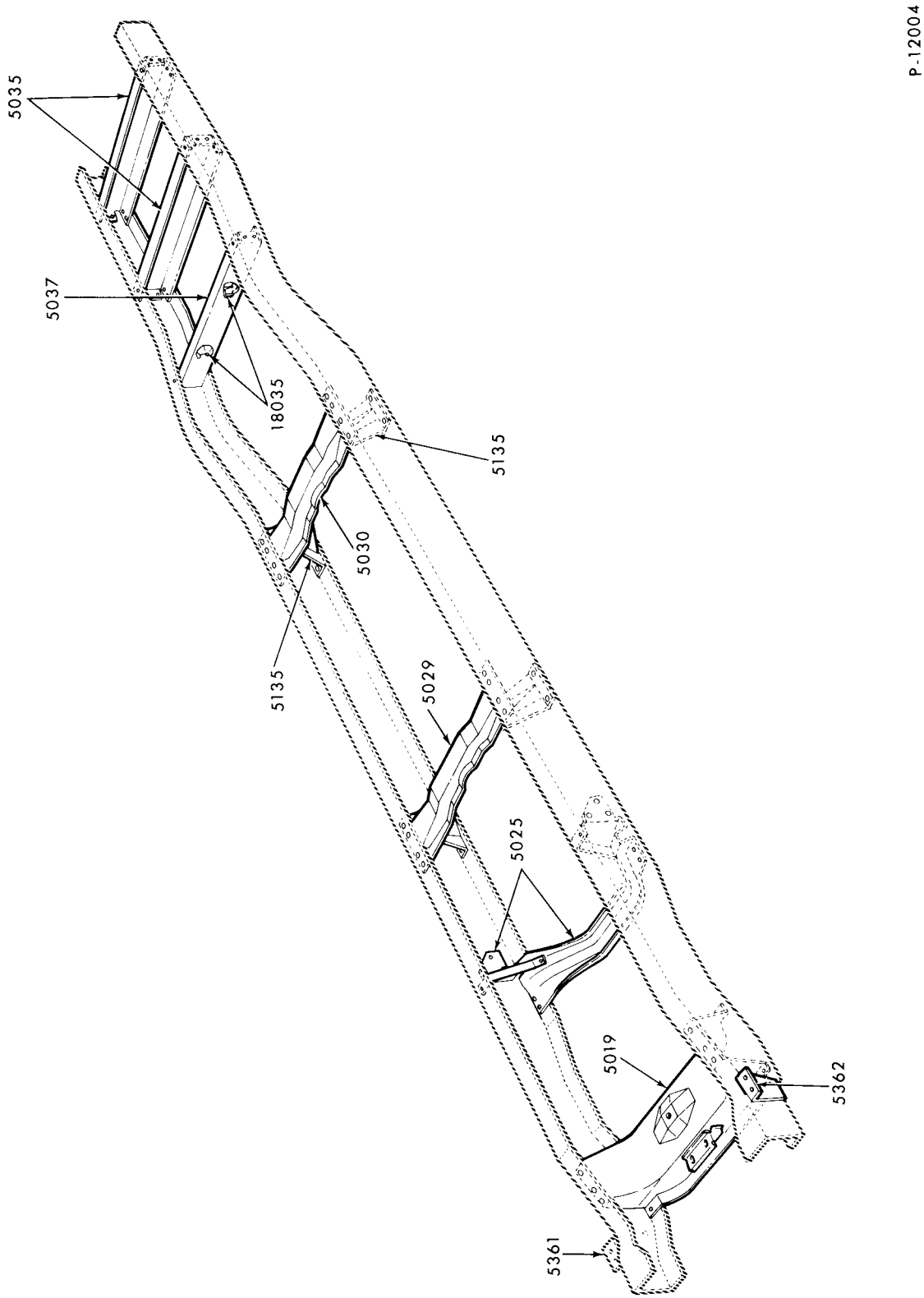

FRAME
1973/76 P350--104" and 122" W/B

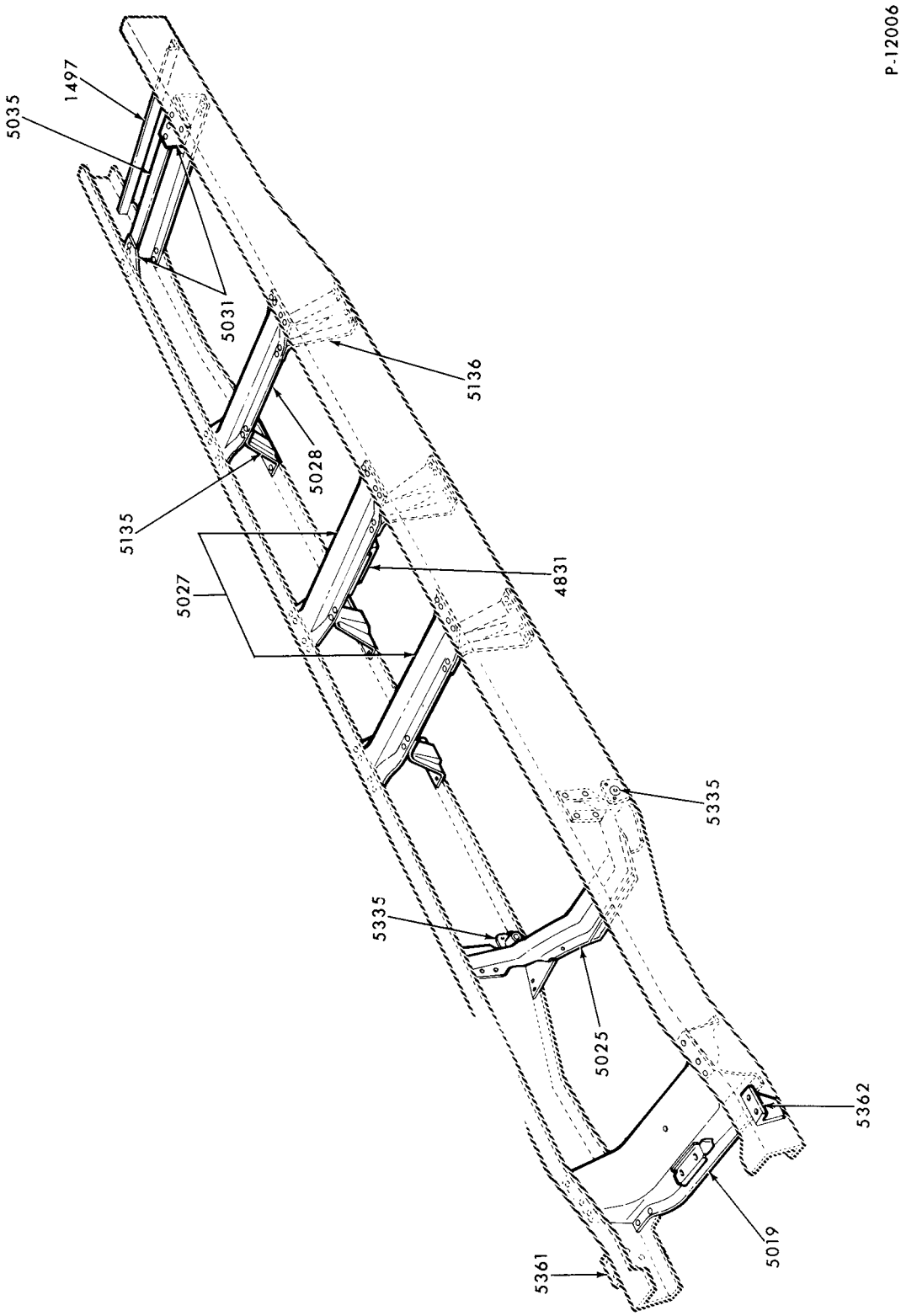

FRAME
1973/77 P500--154" W/B

COPYRIGHT © 1979 --FORD MOTOR-DEARBORN, MICHIGAN COMPANY

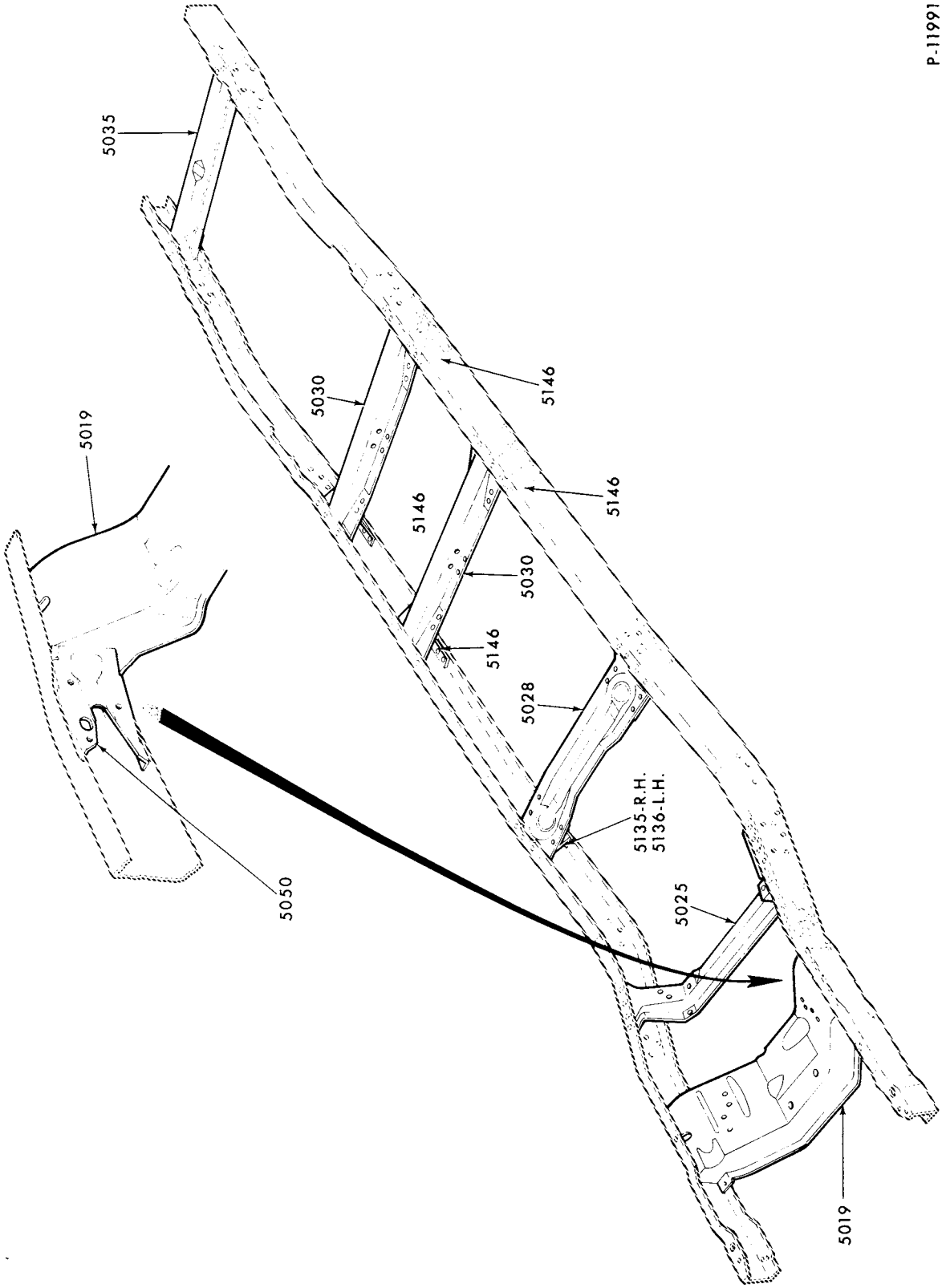

FRAME

1973/ F250 (CREW CAB)--2/W/D (150" W/B)

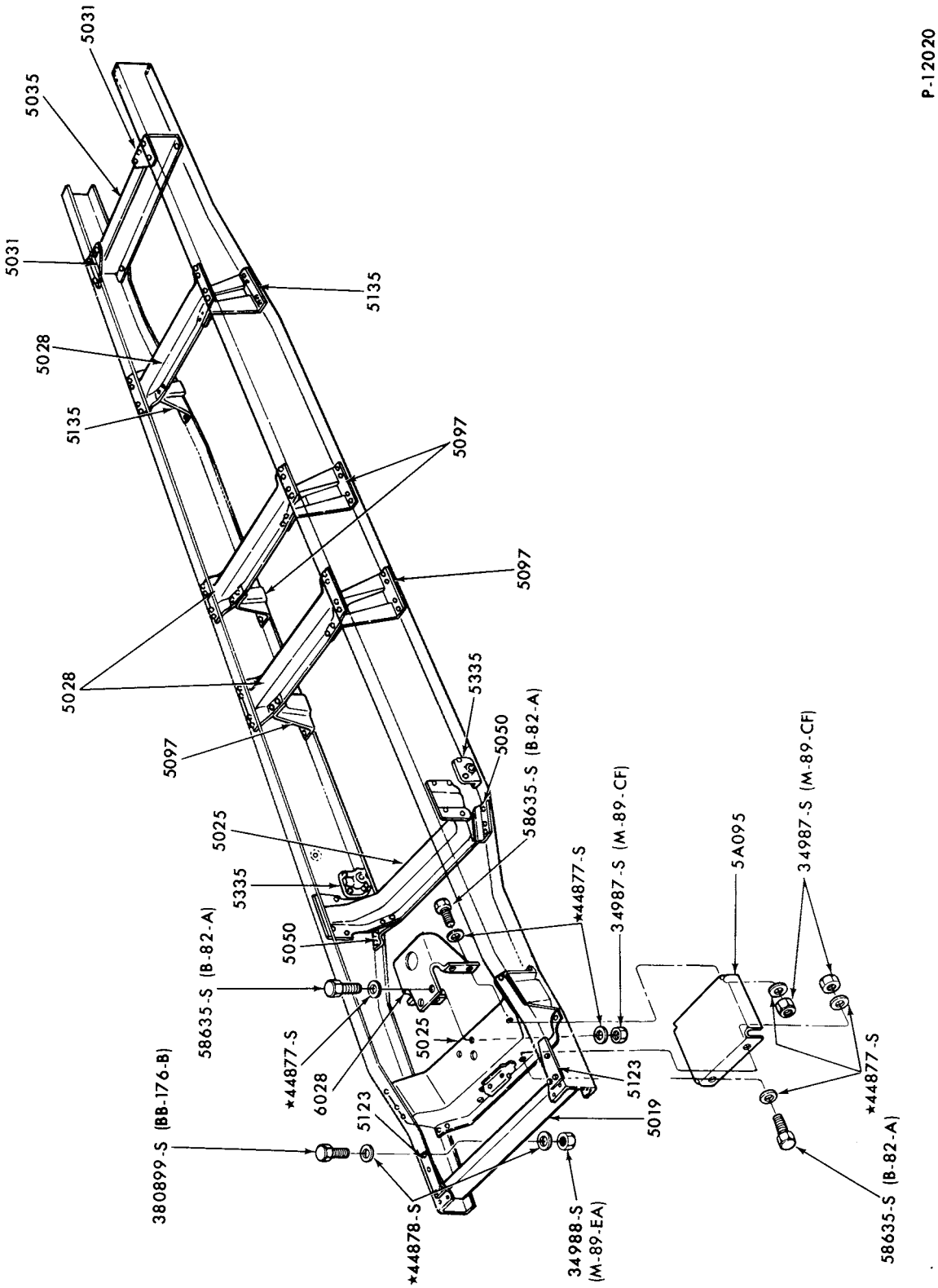

FRAME - TYPICAL
1973/76 M450/500

COPYRIGHT © 1979 FORD MOTOR COMPANY DEARBORN, MICHIGAN

1973/79 TRUCK SERIES 100/500

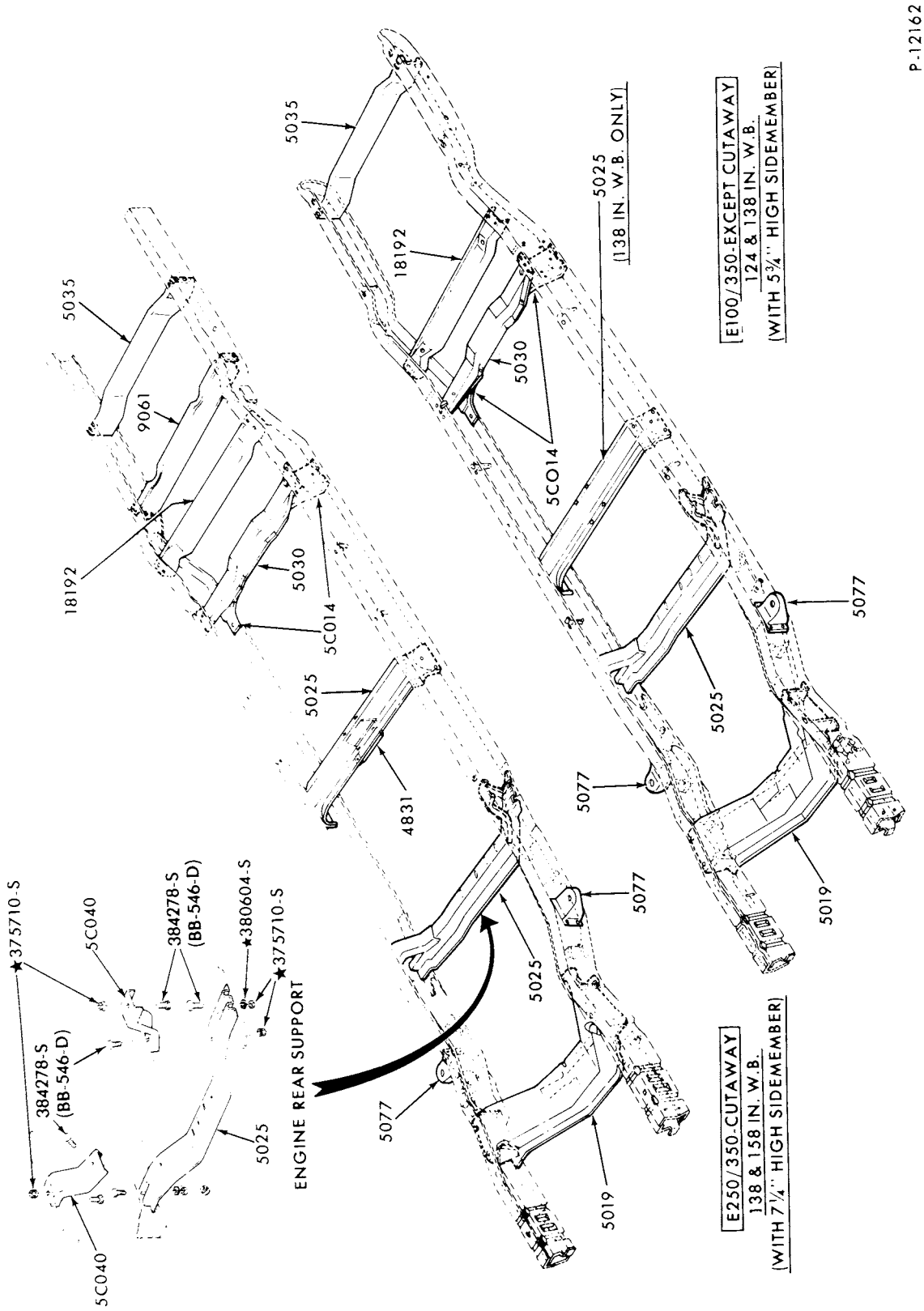

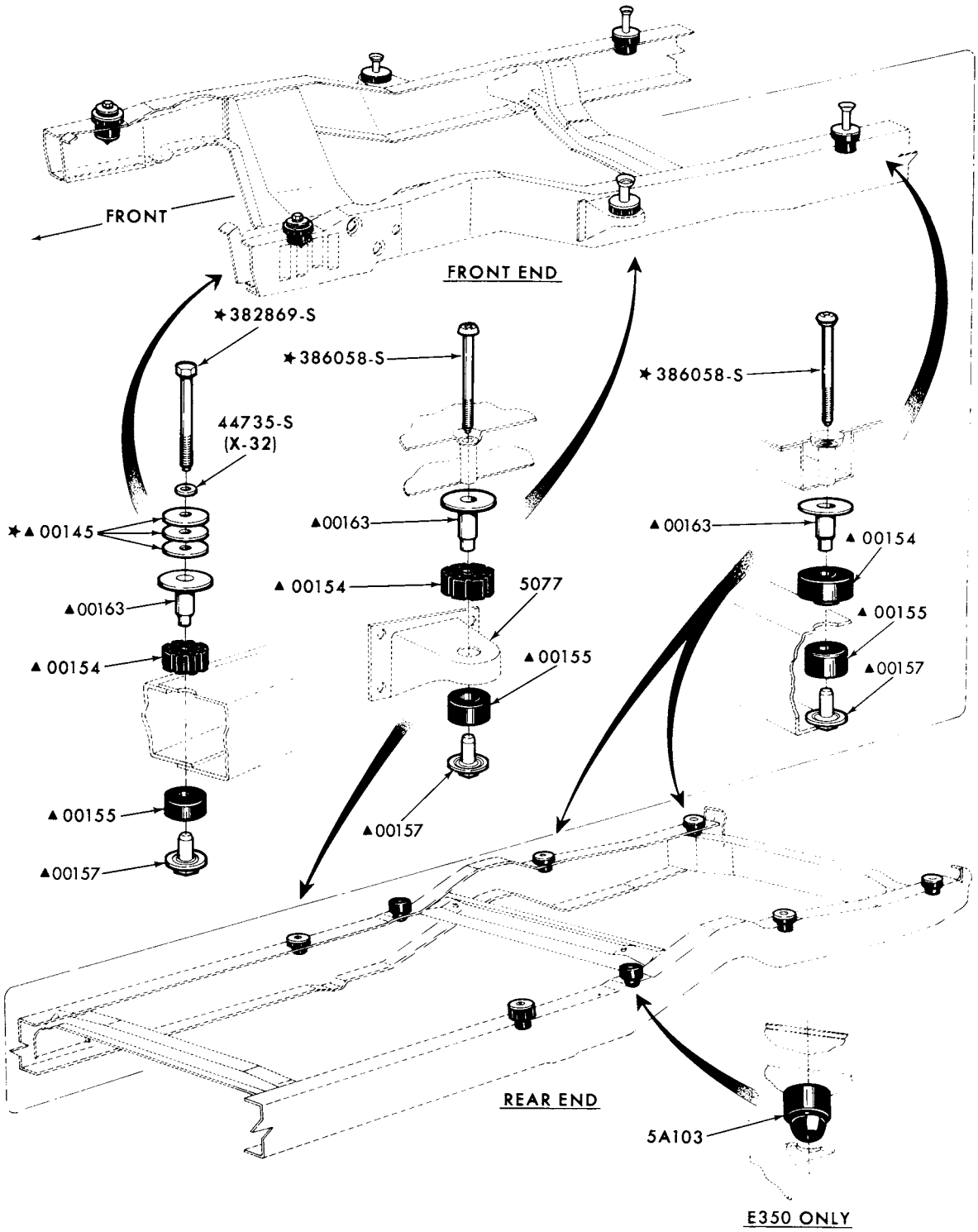

▲ REFER TO GROUP NUMBER IN BODY SECTION

P-11454

BODY MOUNTS INSTALLATION
1975/ E100/350

COPYRIGHT © 1979 FORD MOTOR COMPANY—DEARBORN, MICHIGAN

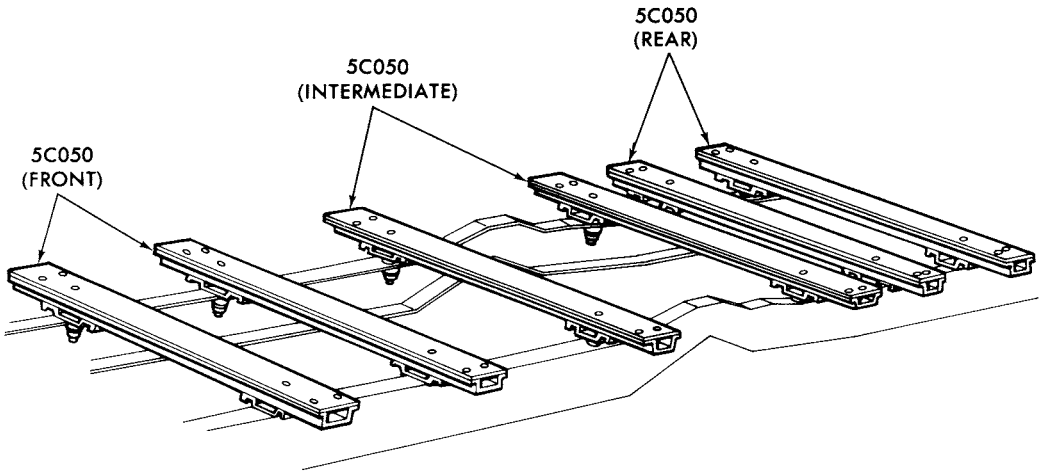

SPACER MOUNTS PARCEL DELIVERY VAN

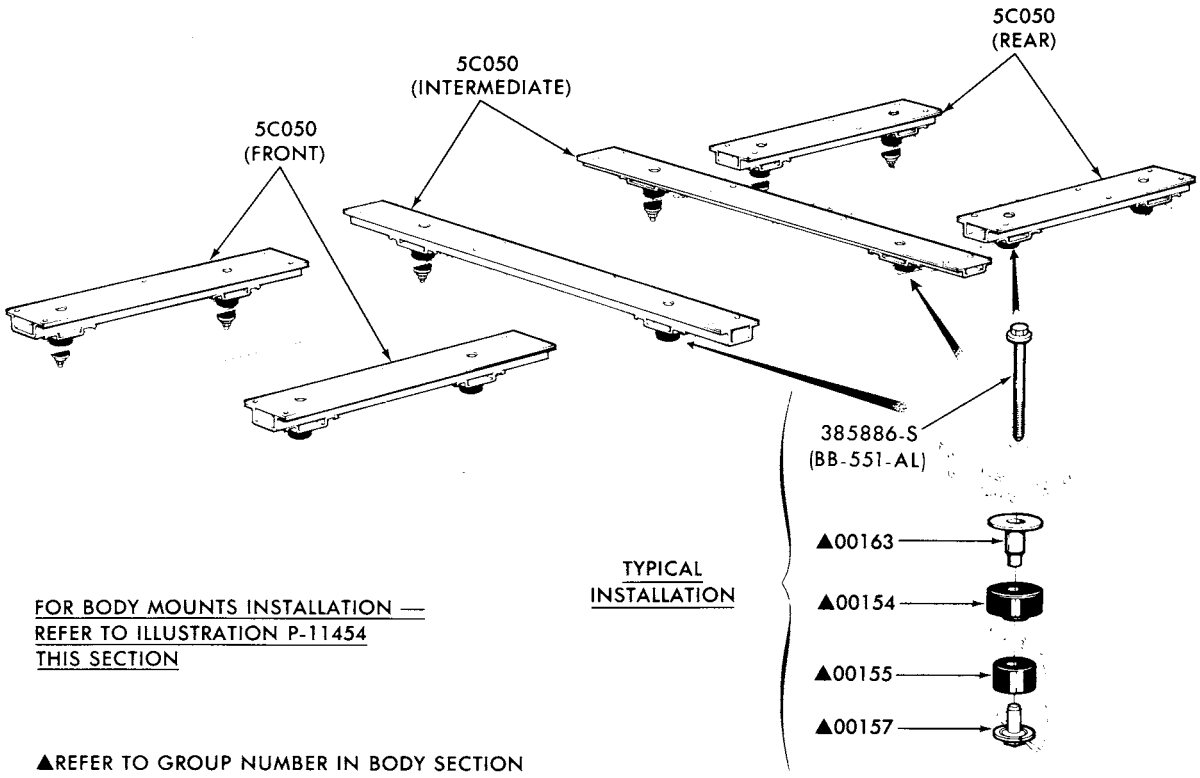

BODY SPACER INSTALLATION
1975/ E250/350 (CUTAWAY)-LONGITUDINAL SYSTEM

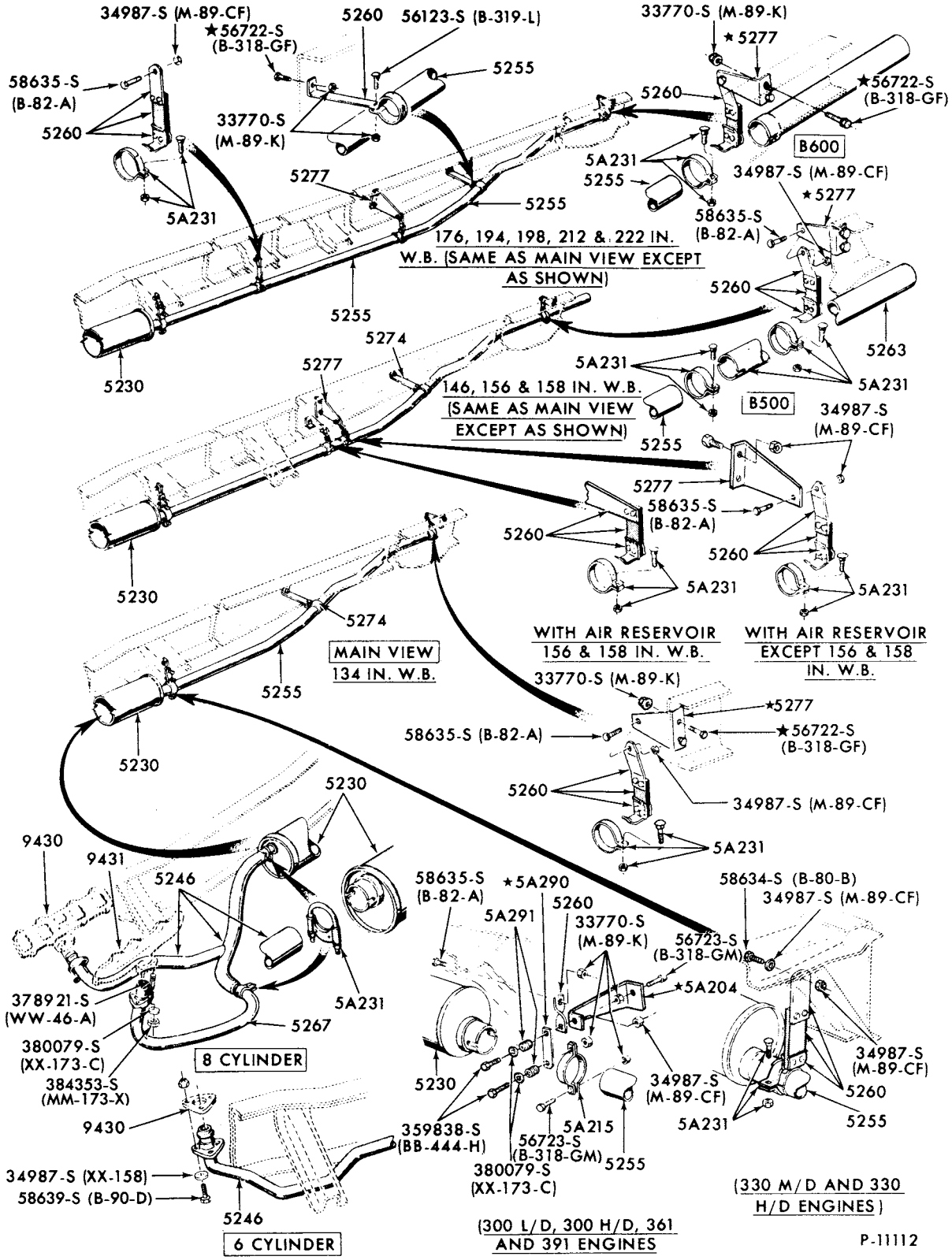

EXHAUST SYSTEM

1973/77 B-F500 (84)

COPYRIGHT © 1980 FORD MOTOR COMPANY DEARBORN, MICHIGAN

1973/79 TRUCK SERIES 100/500

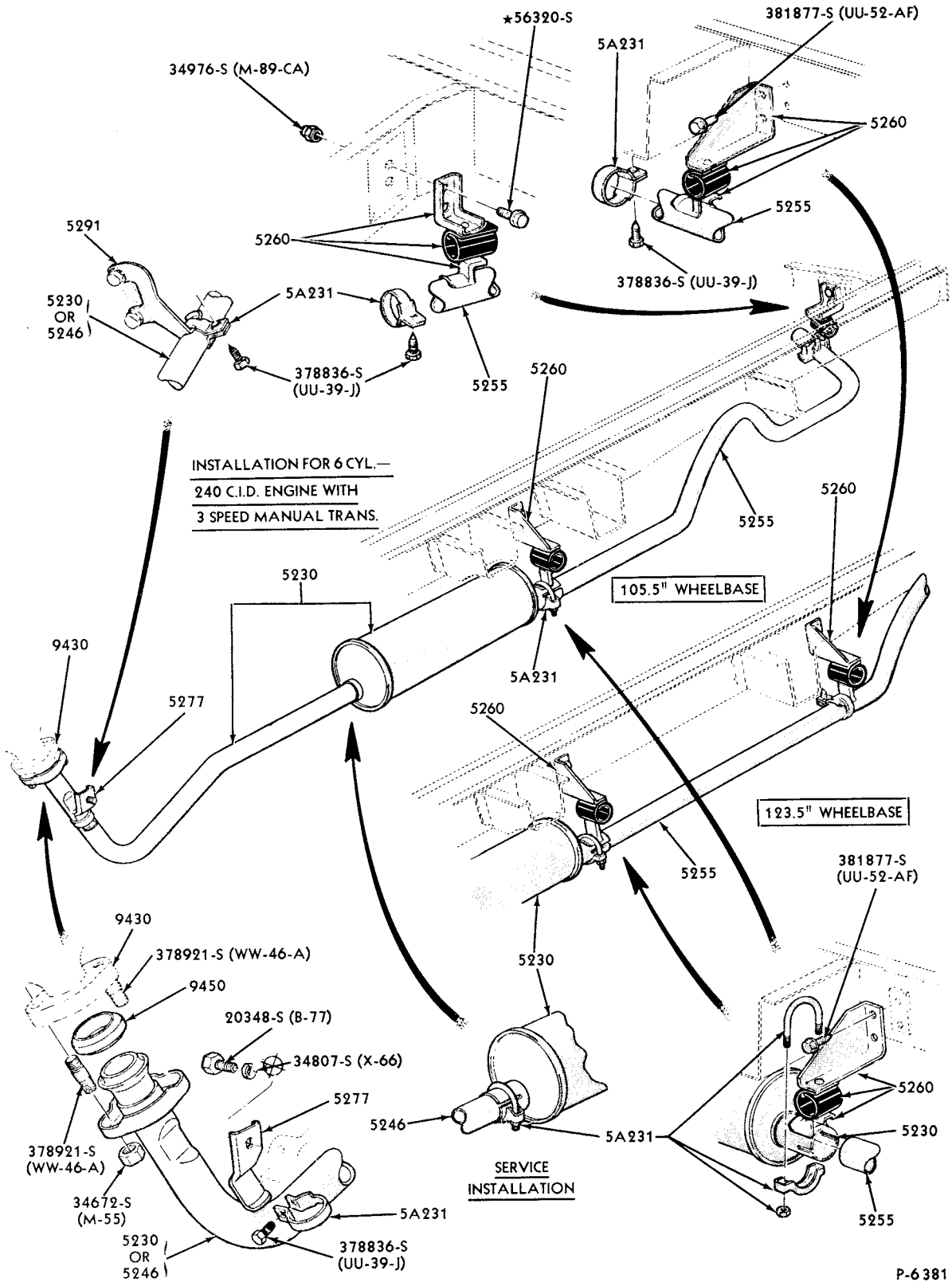

EXHAUST SYSTEM
1973/74 E100/300--6 CYL. 240 and 300

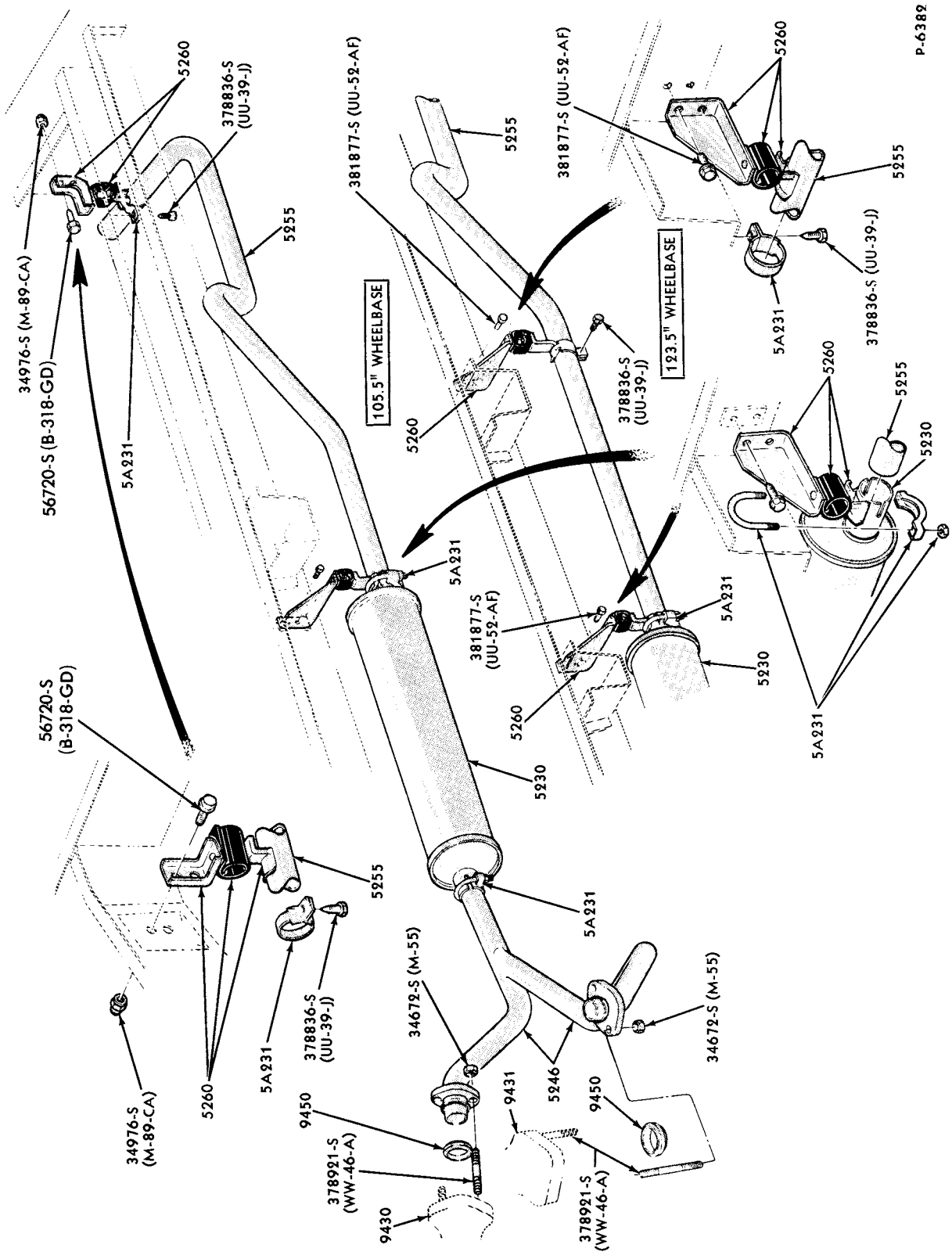

EXHAUST SYSTEM
1973/74 E100/300--8 CYL. 302

COPYRIGHT © 1979 FORD MOTOR COMPANY, DEARBORN, MICHIGAN

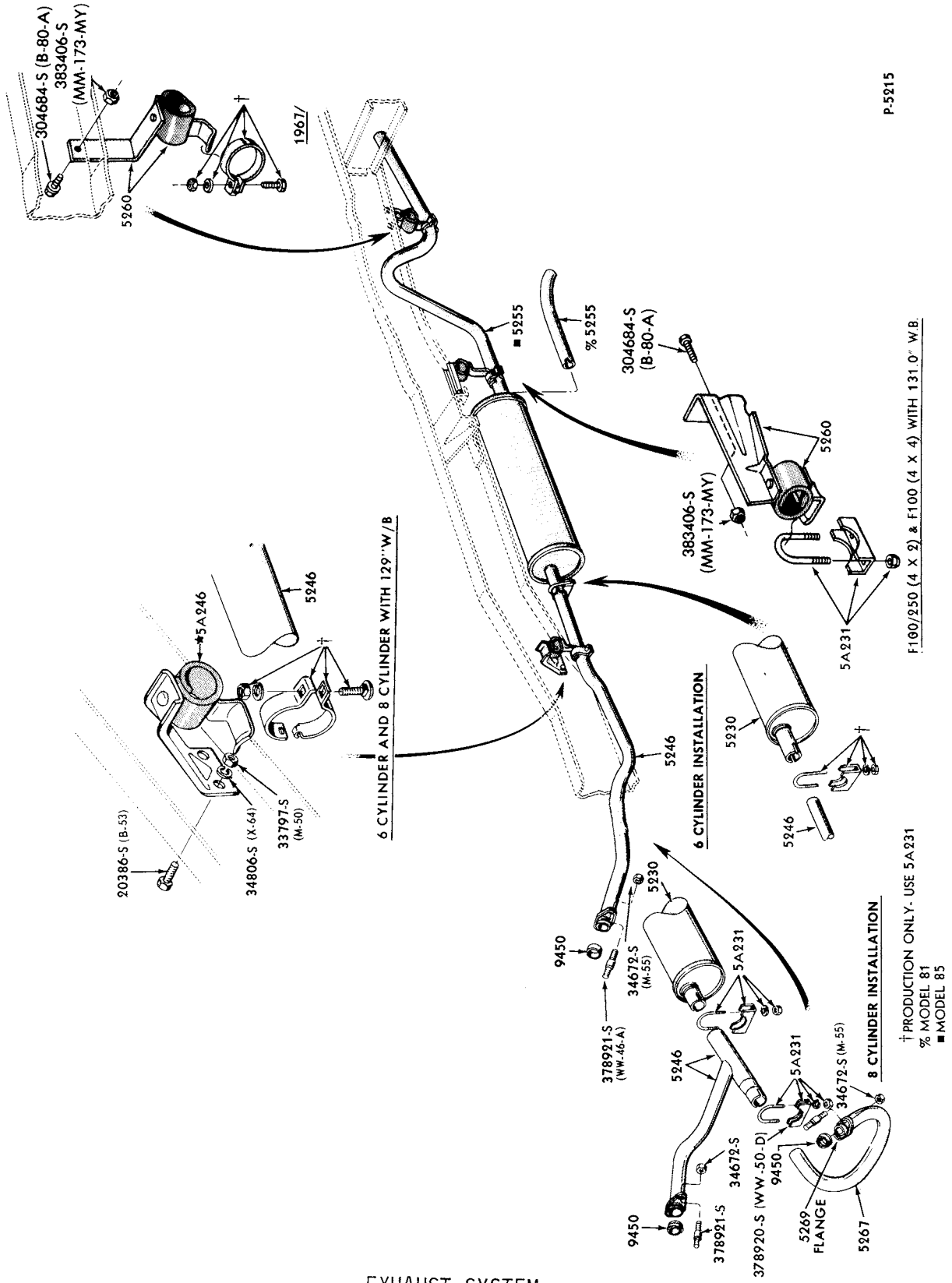

EXHAUST SYSTEM

1973/74 F100/250 (REGULAR CAB)--2/W/D and 6 and 8 CYL. 240,300,302,360,390-2/B
1973/74 F100--4/W/D and 8 CYL. 360

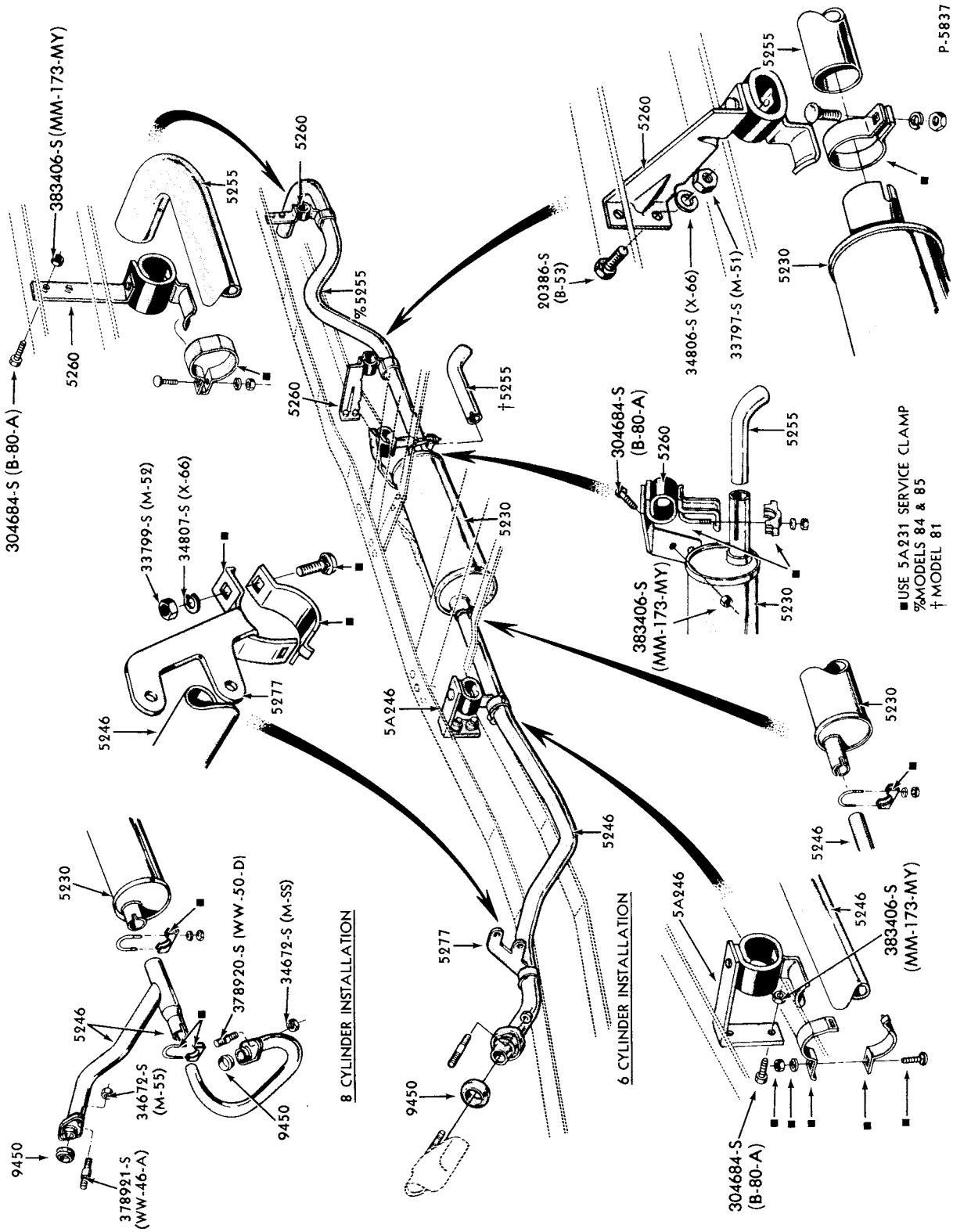

EXHAUST SYSTEM
1973/74 F250 (REGULAR CAB)--4/W/D and 8 CYL. 360
1973/74 F350 (REGULAR CAB)--6 CYL. 300 and 8 CYL. 360, 390-2/B with 136" and 160" W/B

COPYRIGHT © 1979 FORD MOTOR COMPANY—DEARBORN, MICHIGAN

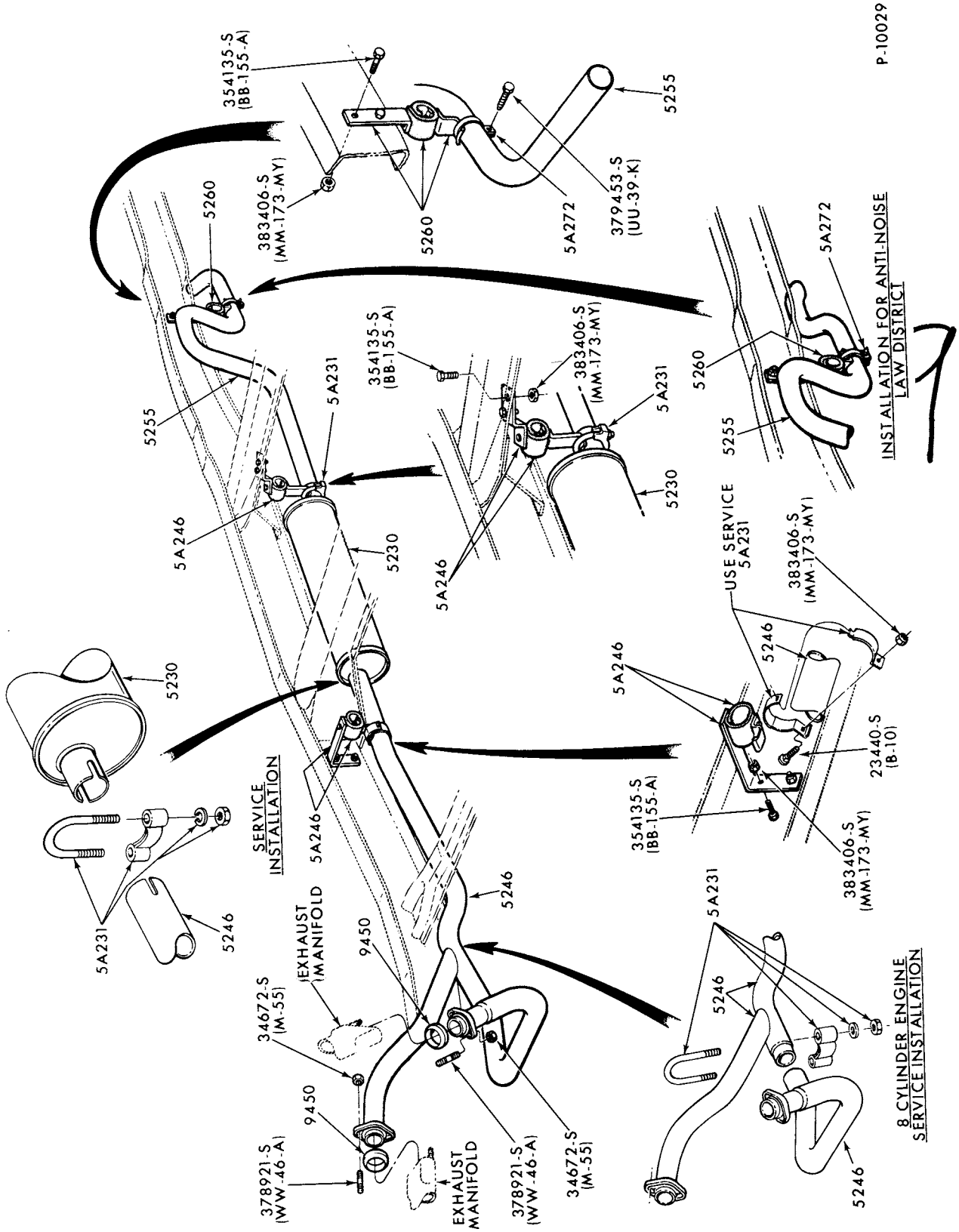

EXHAUST SYSTEM
1973/74 F350--8 CYL. 360, 390-2/B and 140" W/B

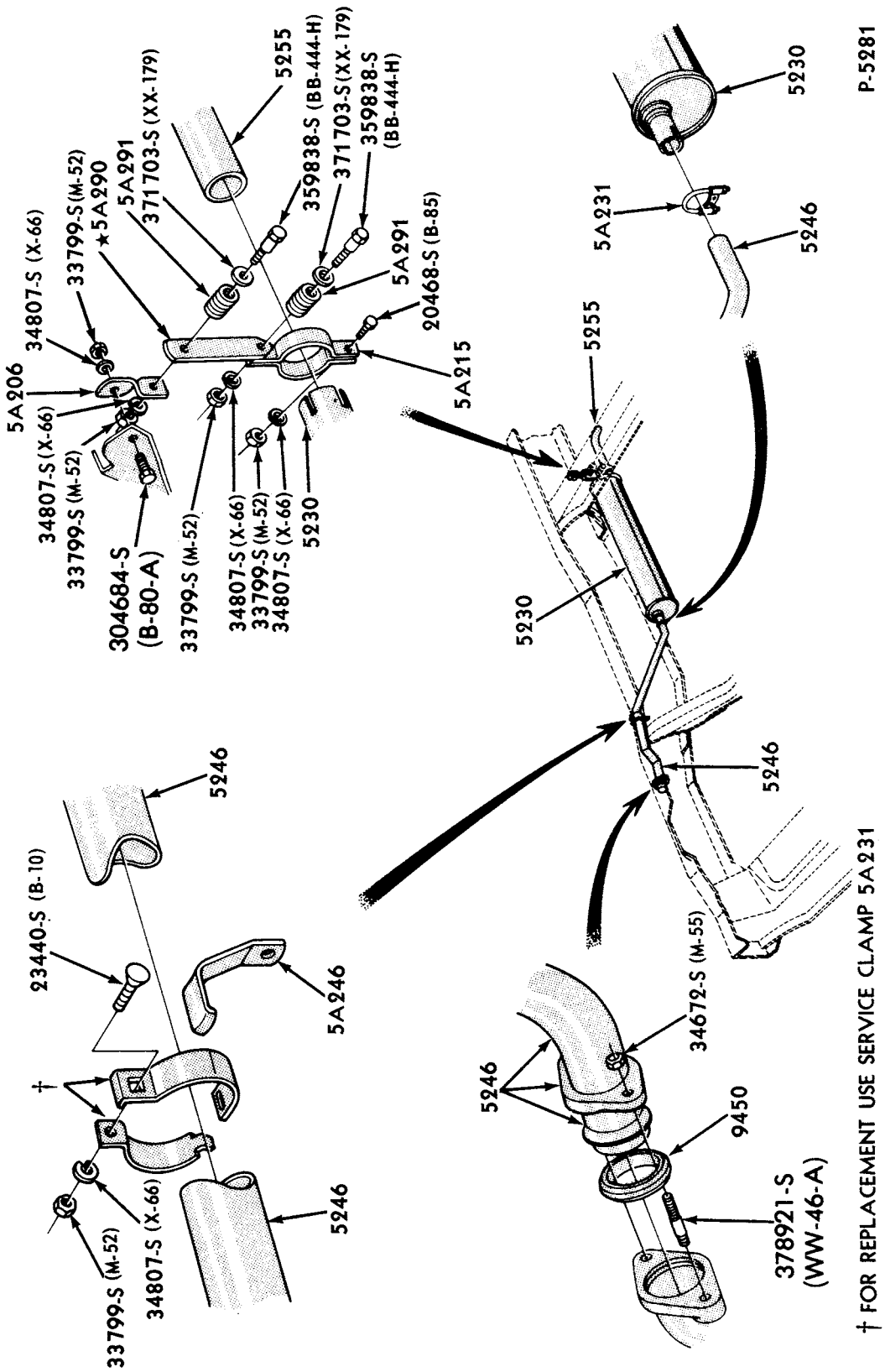

EXHAUST SYSTEM - w/OUTLET PIPE HANGER
1973/75 F500 (81)--6 CYL. 300 - "BEFORE SER. V20,001"

COPYRIGHT © 1980 —FORD MOTOR COMPANY—DEARBORN, MICHIGAN

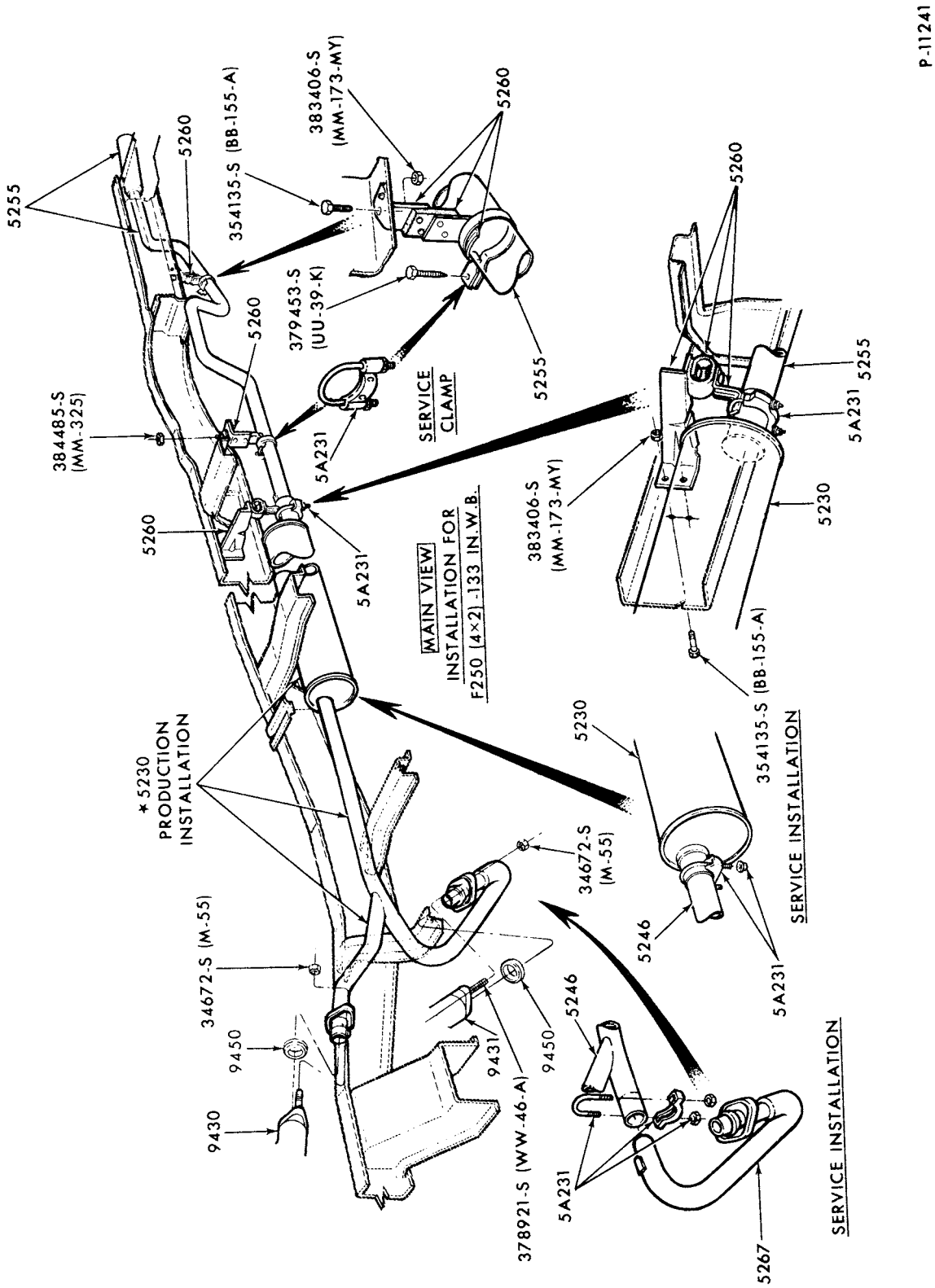

EXHAUST SYSTEM

1974 F250 (REGULAR CAB)--8 CYL. 390-4/B

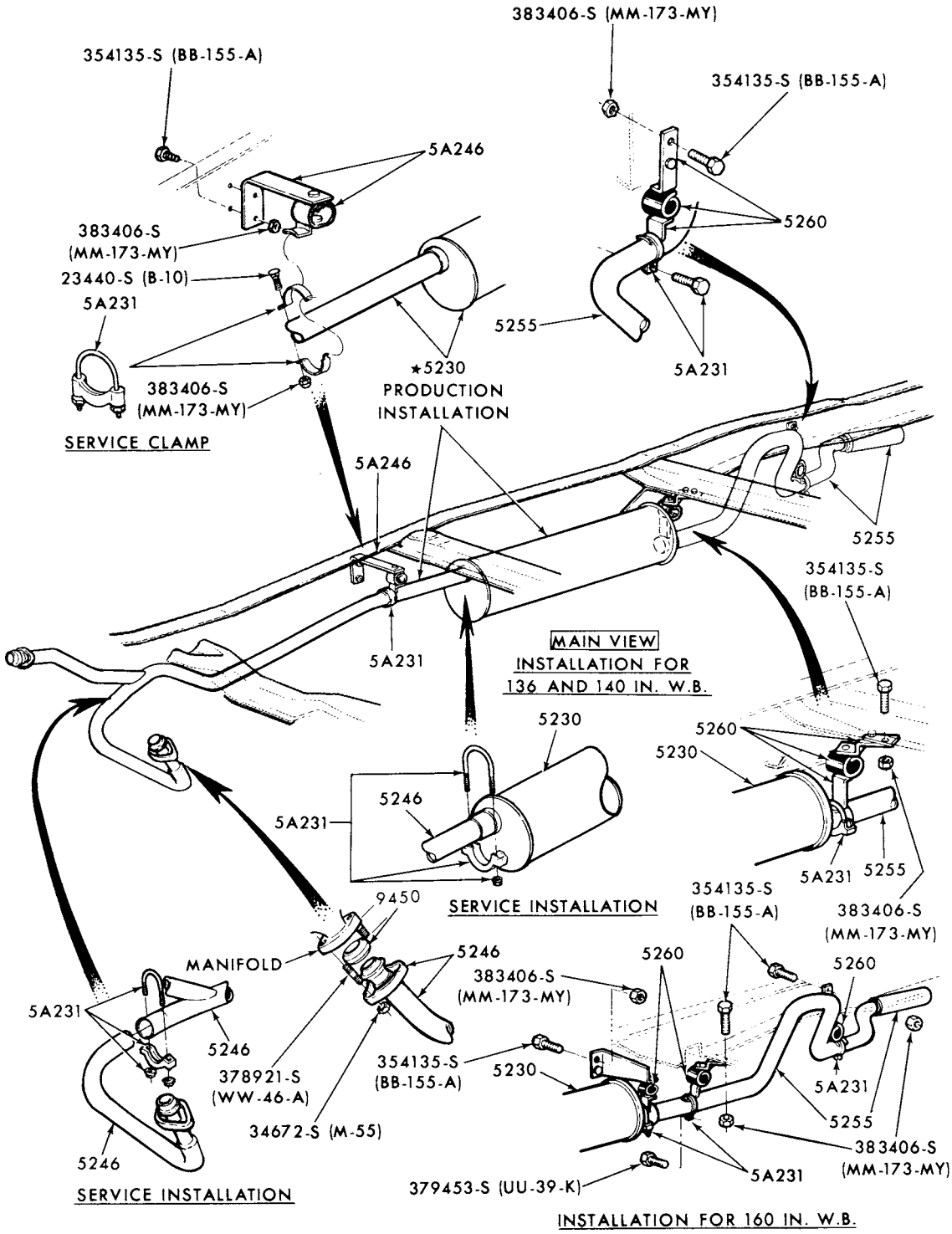

P-11242

EXHAUST SYSTEM
1974 F350--8 CYL. 390-4/B

COPYRIGHT © 1979 FORD MOTOR COMPANY - DEARBORN, MICHIGAN

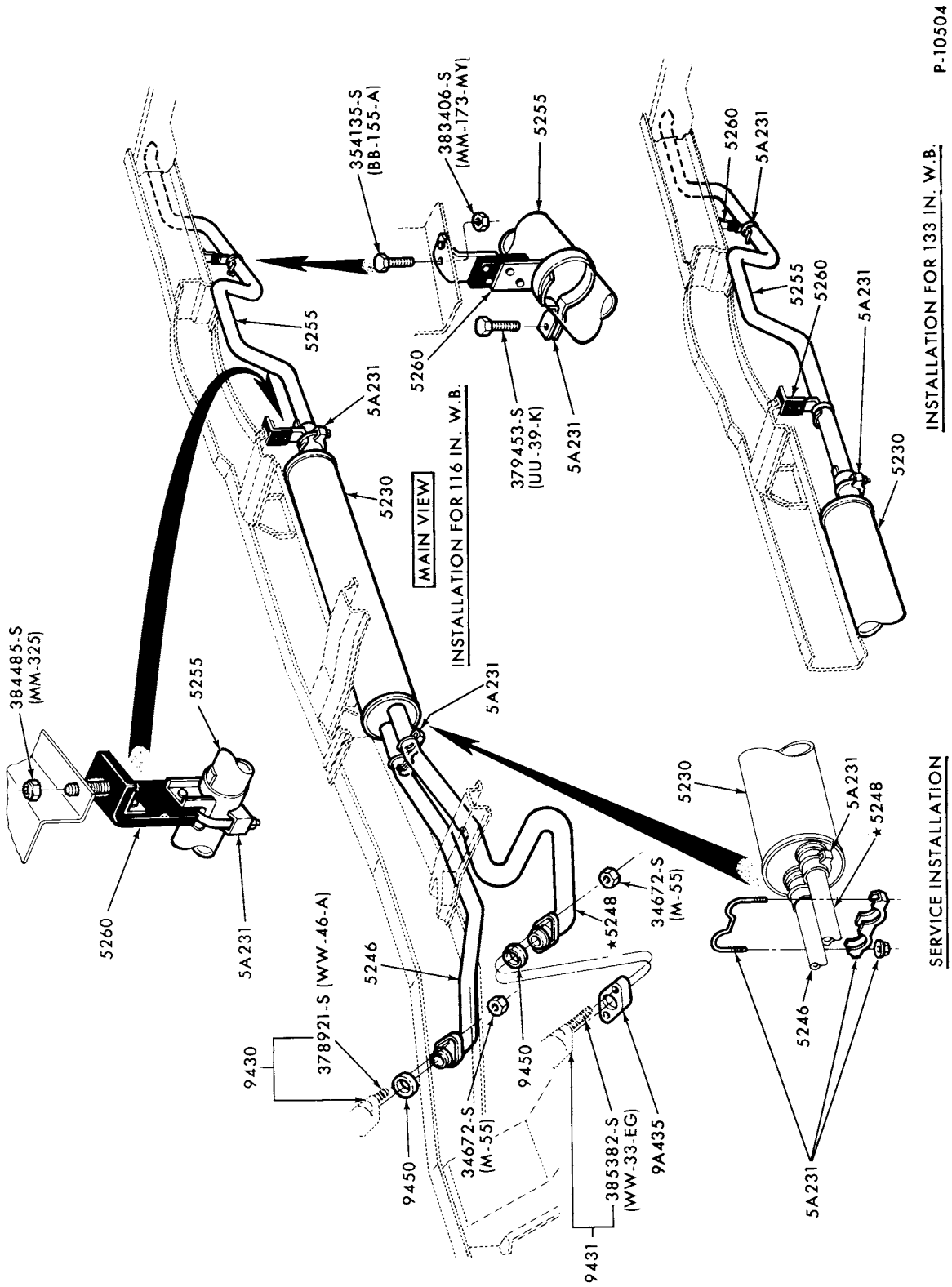

EXHAUST SYSTEM
1973 F250 (REGULAR CAB)--8 CYL. 460

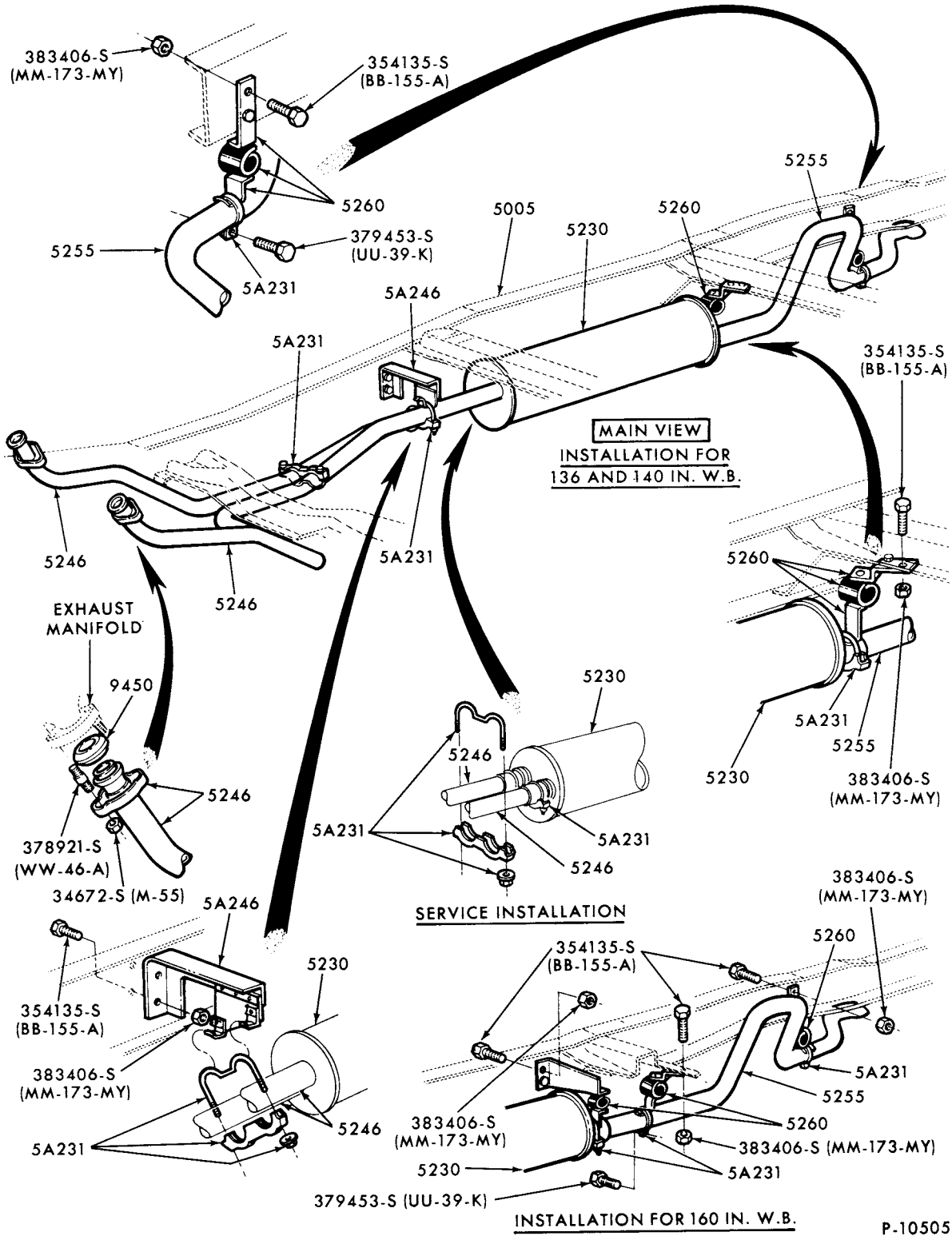

EXHAUST SYSTEM
1973 F350-- 8 CYL. 460

COPYRIGHT © 1979 — FORD MOTOR COMPANY — DEARBORN, MICHIGAN

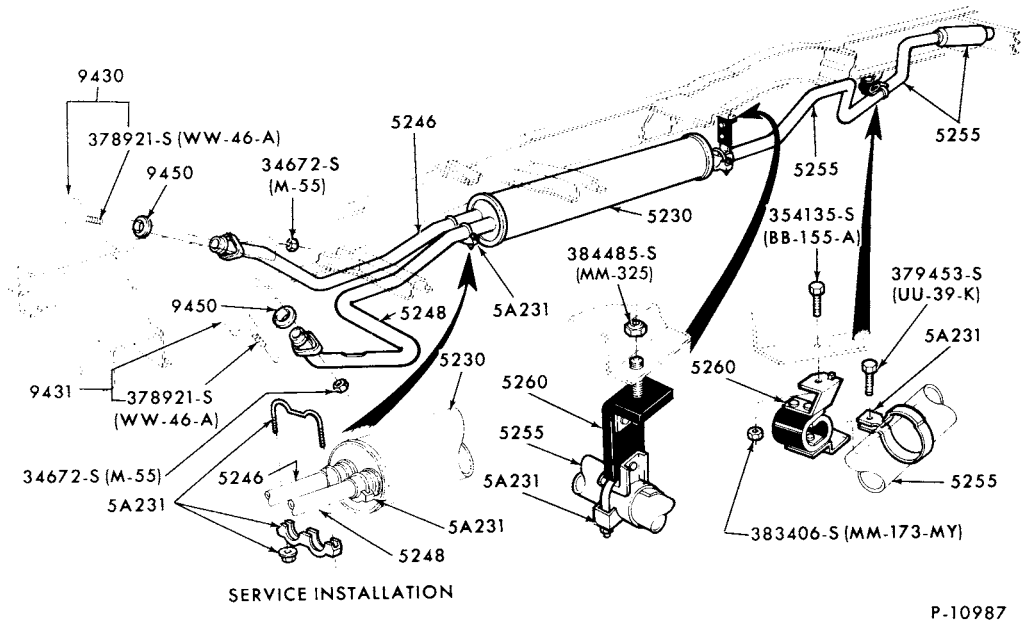

EXHAUST SYSTEM
1974 F100--2/W/D and 116" W/B with 8 CYL. 460

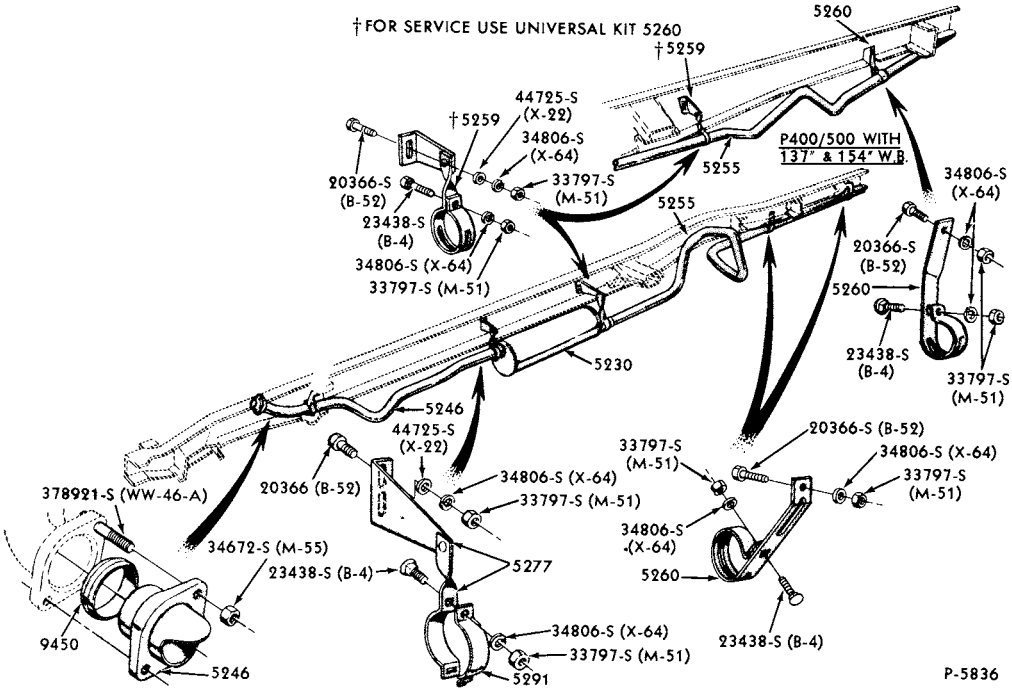

EXHAUST SYSTEM
1973/77 P350/500

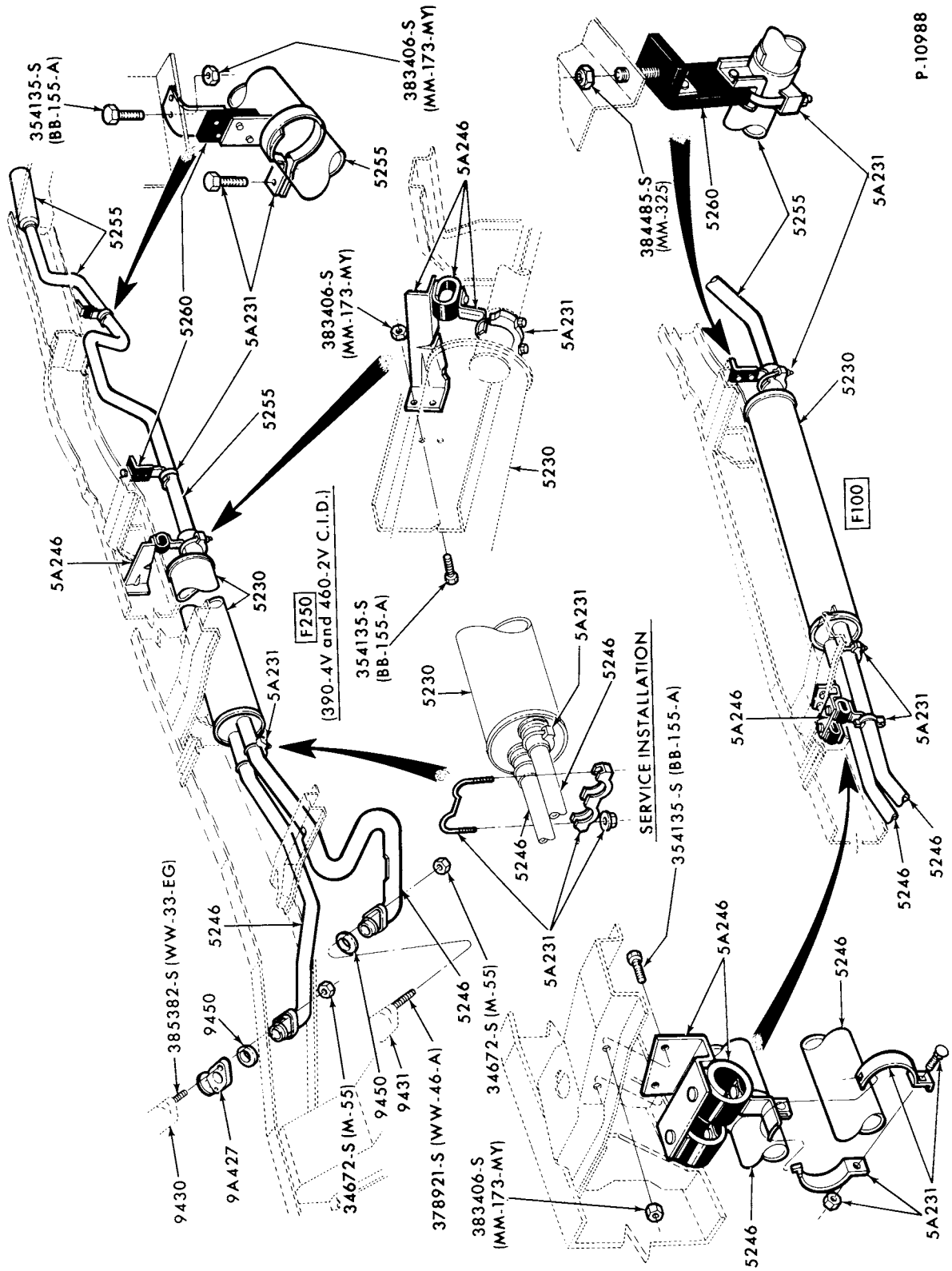

EXHAUST SYSTEM

1974 F100/250 (REGULAR CAB)--2/W/D and 133" W/B with 8 CYL. 460

FORD MOTOR COMPANY—DEARBORN, MICHIGAN
COPYRIGHT © 1979

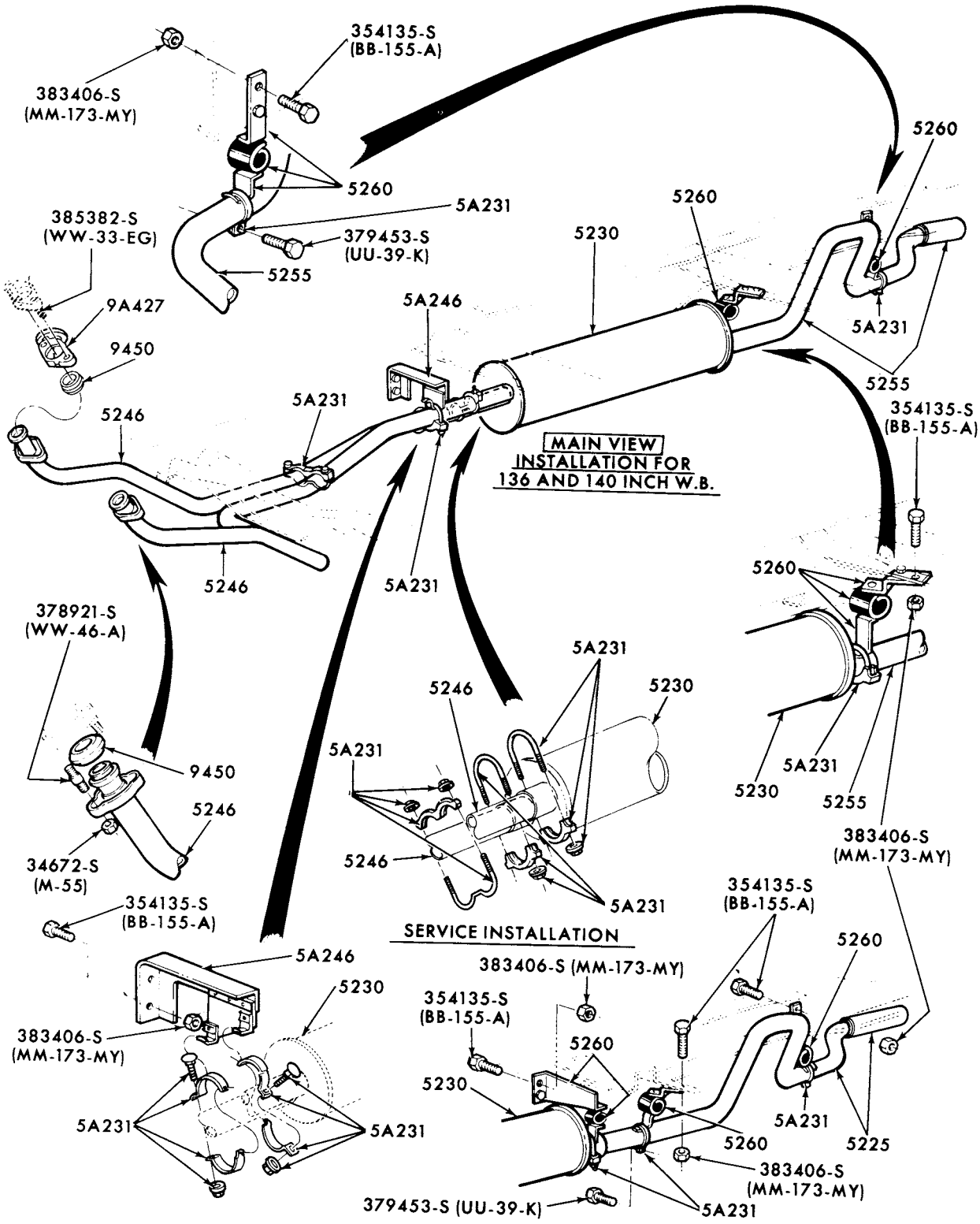

EXHAUST SYSTEM

1974/76 F250/350 (SUPER CAMPER SPECIAL and REGULAR CAB)--
2/W/D with 8 CYL. 460 and 137", 140" and 160" W/B

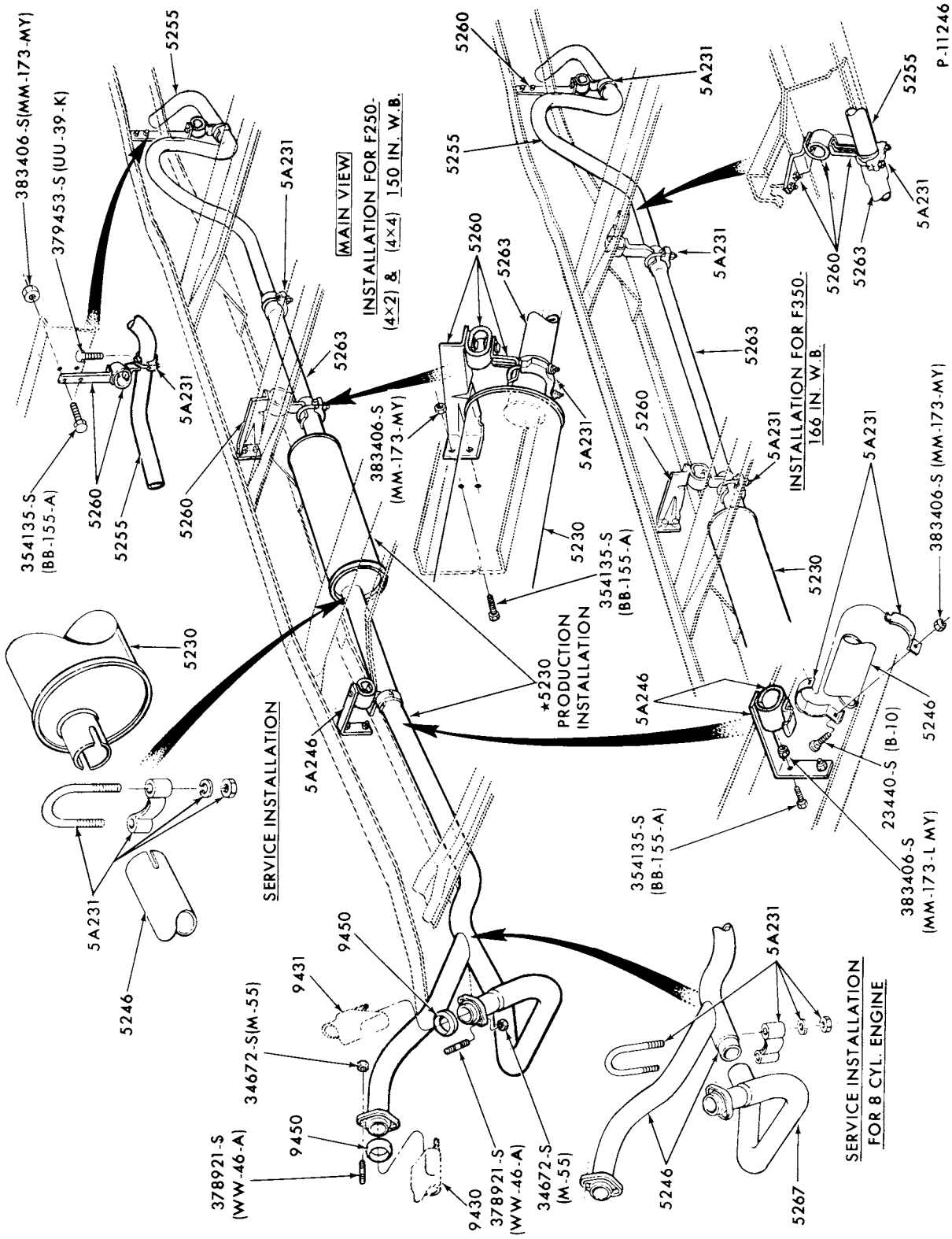

EXHAUST SYSTEM

1974/76 F250/350 (CREW CAB)--6 & 8 CYL. 300,360,390-2/B

COPYRIGHT © 1979 FORD MOTOR COMPANY DEARBORN, MICHIGAN

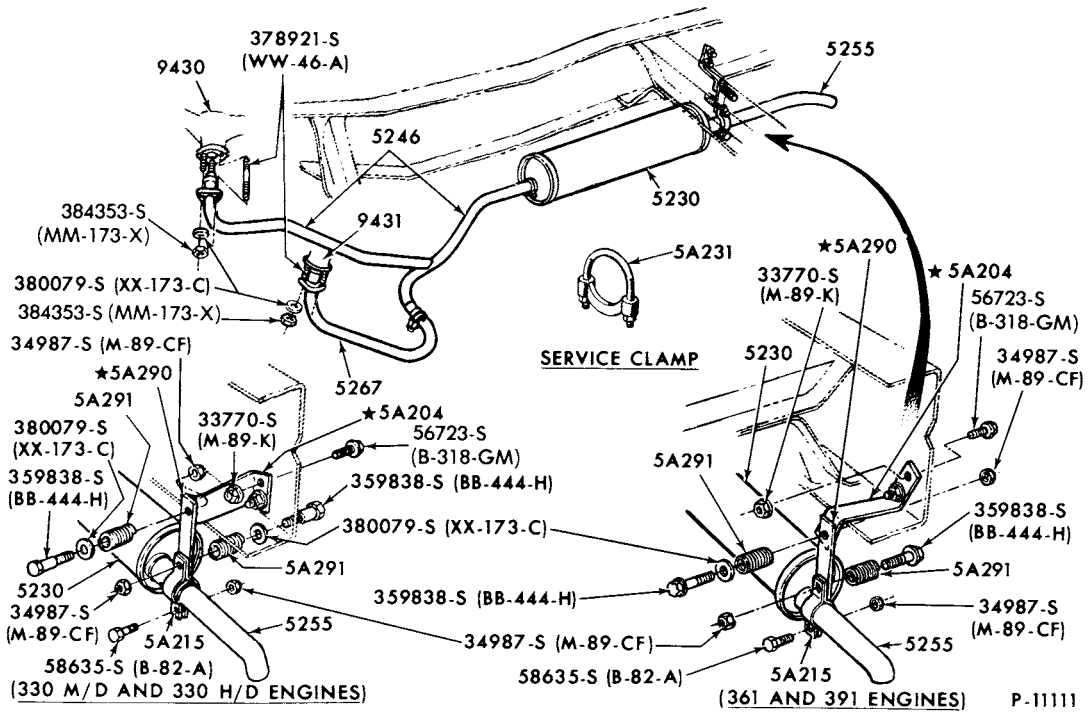

EXHAUST SYSTEM - w/OUTLET PIPE HANGER
1973/75 F500 (81)--8 CYL. 330 - "BEFORE SER. V20,001"

P-11403

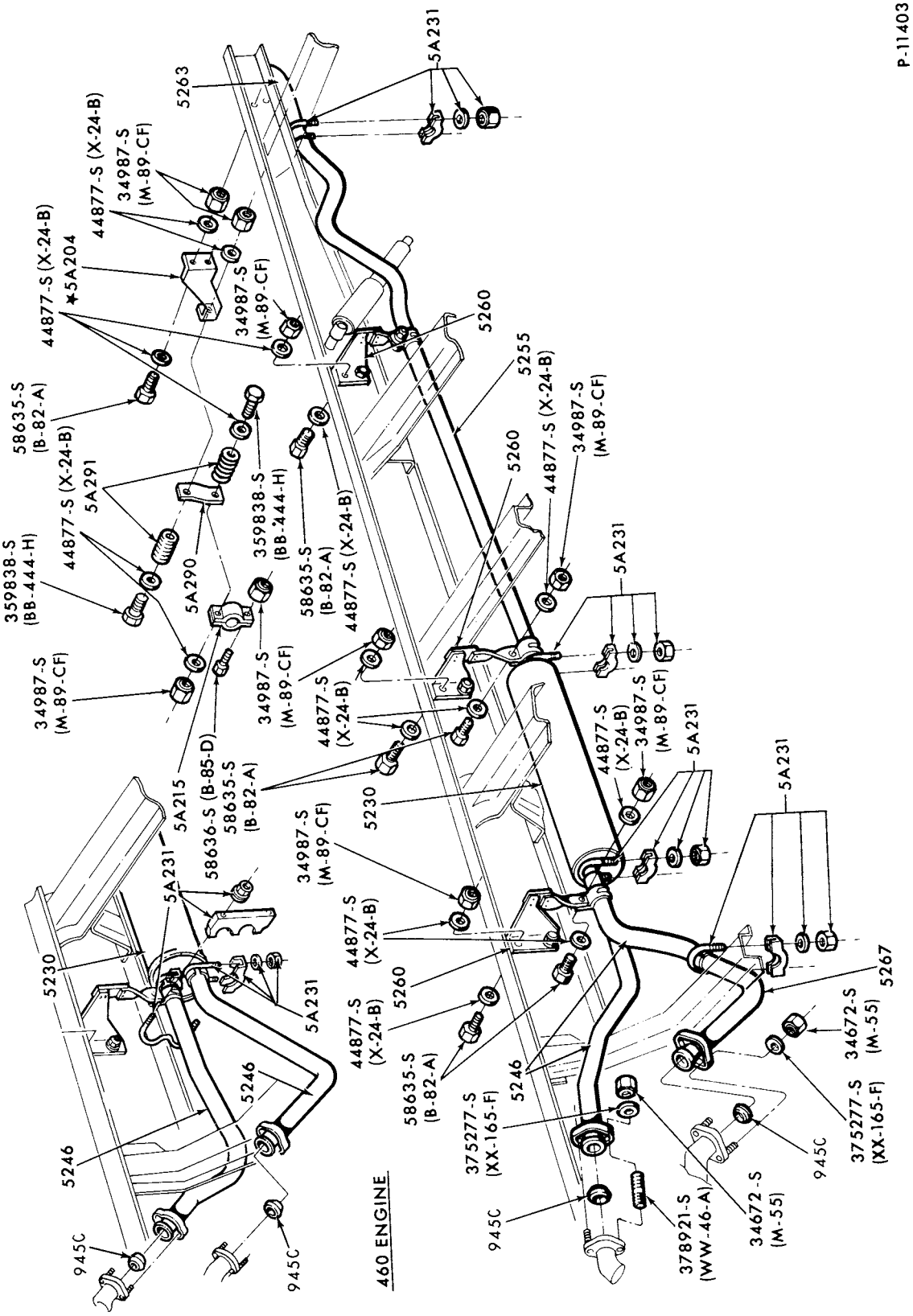

EXHAUST SYSTEM
1973/76 M450/500--8 CYL.

COPYRIGHT © 1979 FORD MOTOR COMPANY DEARBORN, MICHIGAN

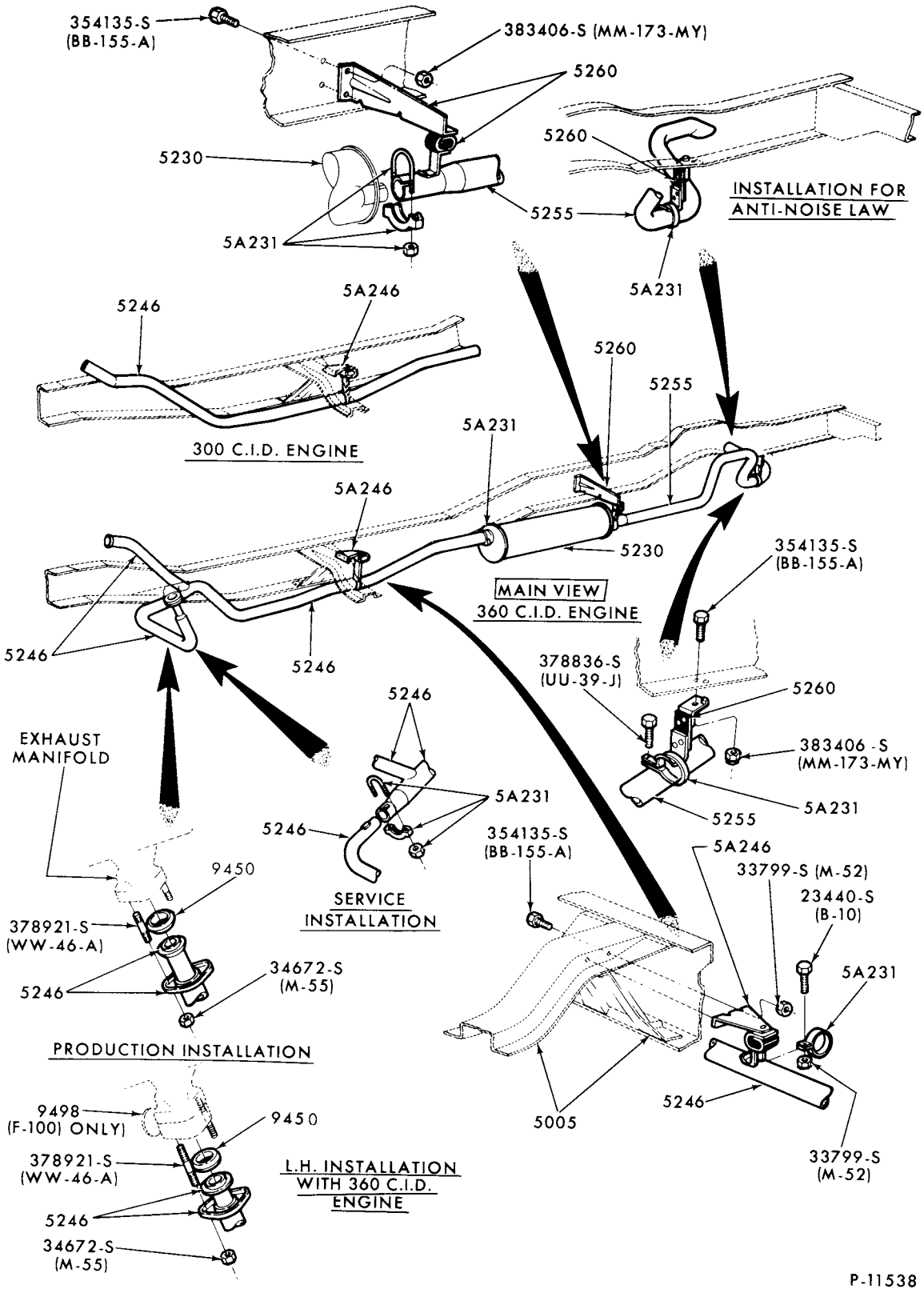

EXHAUST SYSTEM

1974 F100/250 (SUPER CAB)--2/W/D with 6 and 8 CYL. 300,360 and 139",155" W/B

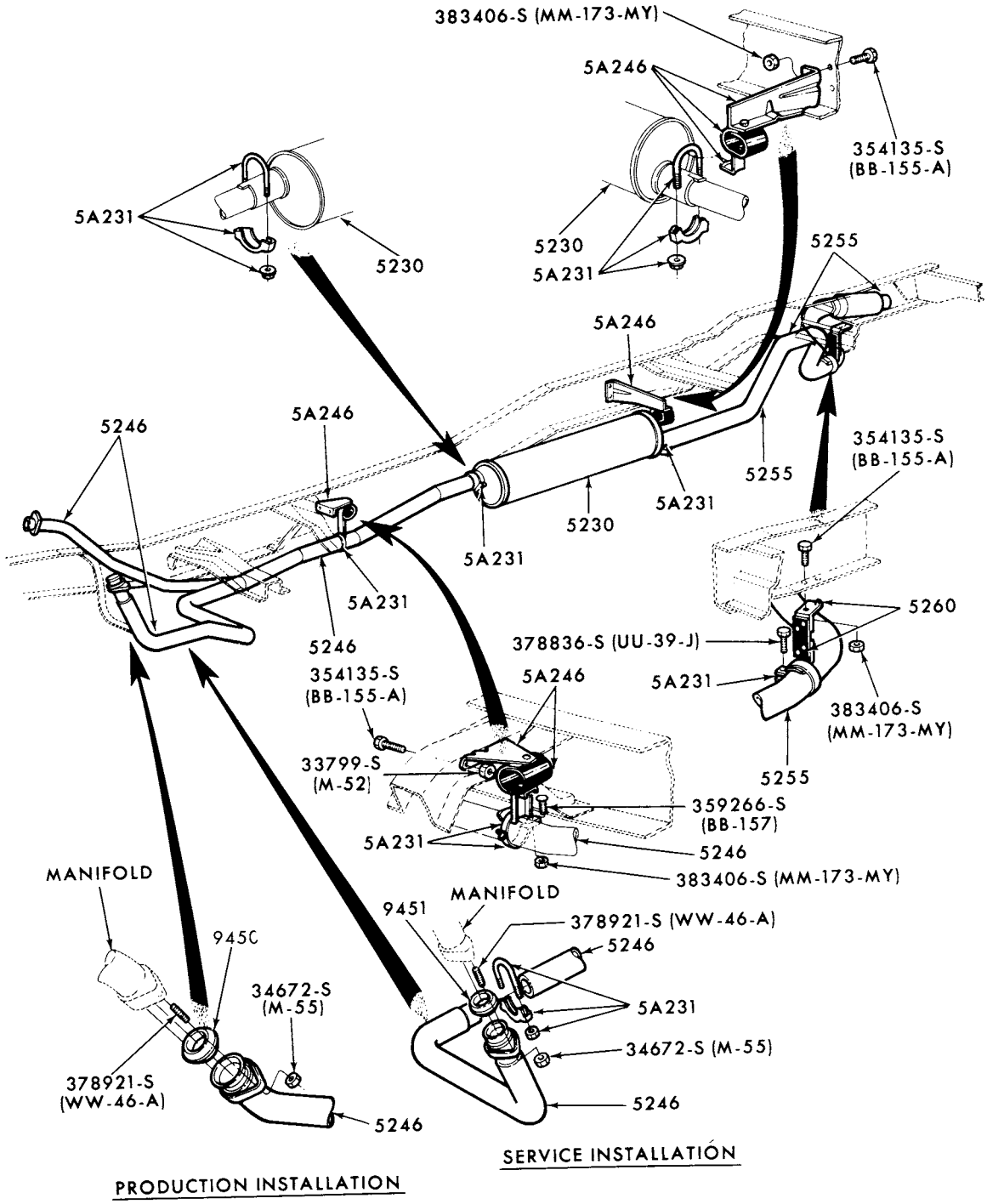

P-11539

EXHAUST SYSTEM

1974 F100/250 (SUPER CAB)--2/W/D with 8 CYL. 390-4/B 139" and 155" W/B

COPYRIGHT © 1979 FORD MOTOR COMPANY - DEARBORN, MICHIGAN

1973/79 TRUCK SERIES 100/500

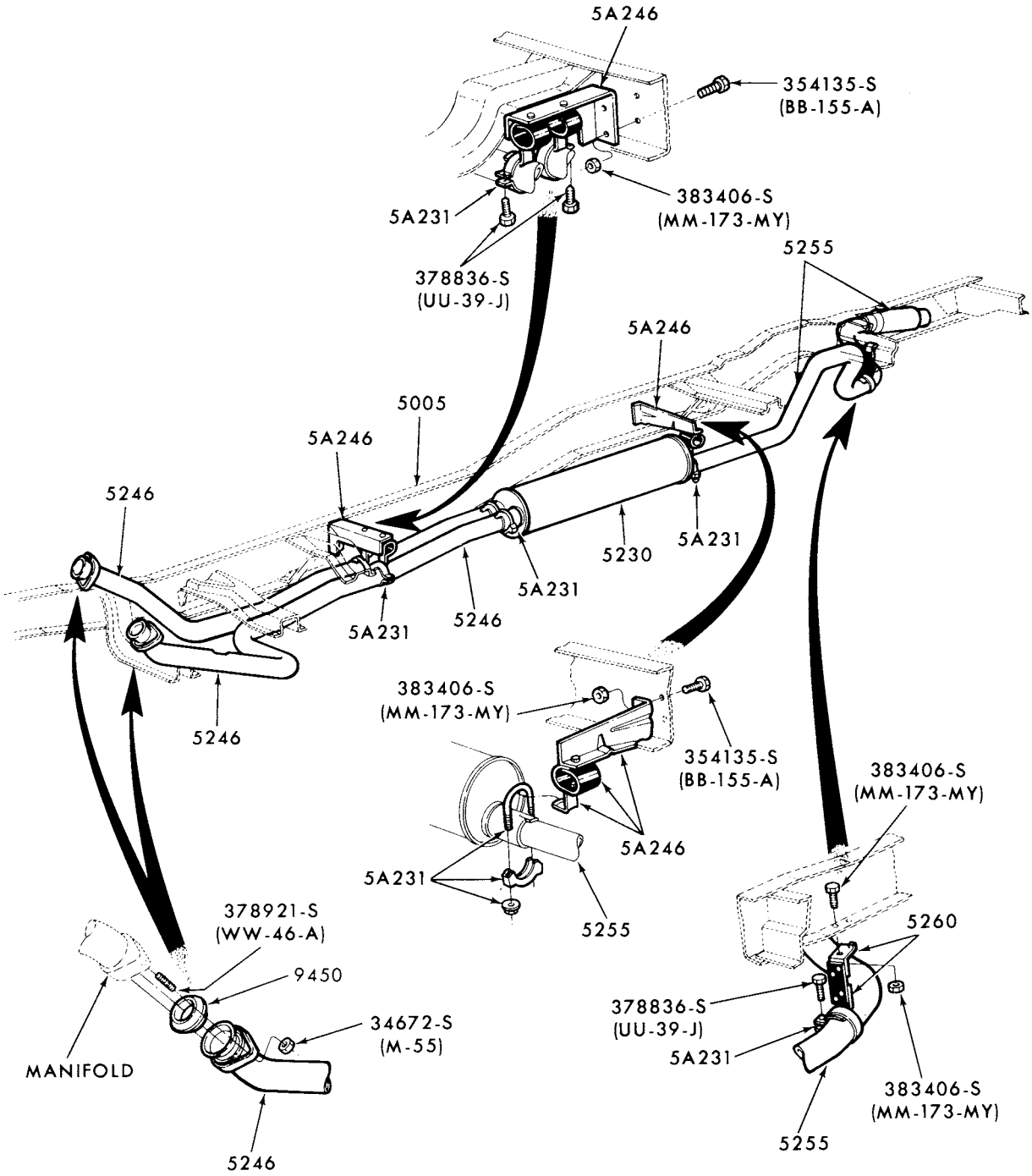

P-11540

EXHAUST SYSTEM

1974 F100/250 (SUPER CAB)--2/W/D with 8 CYL. 460-139" and 155" W/B

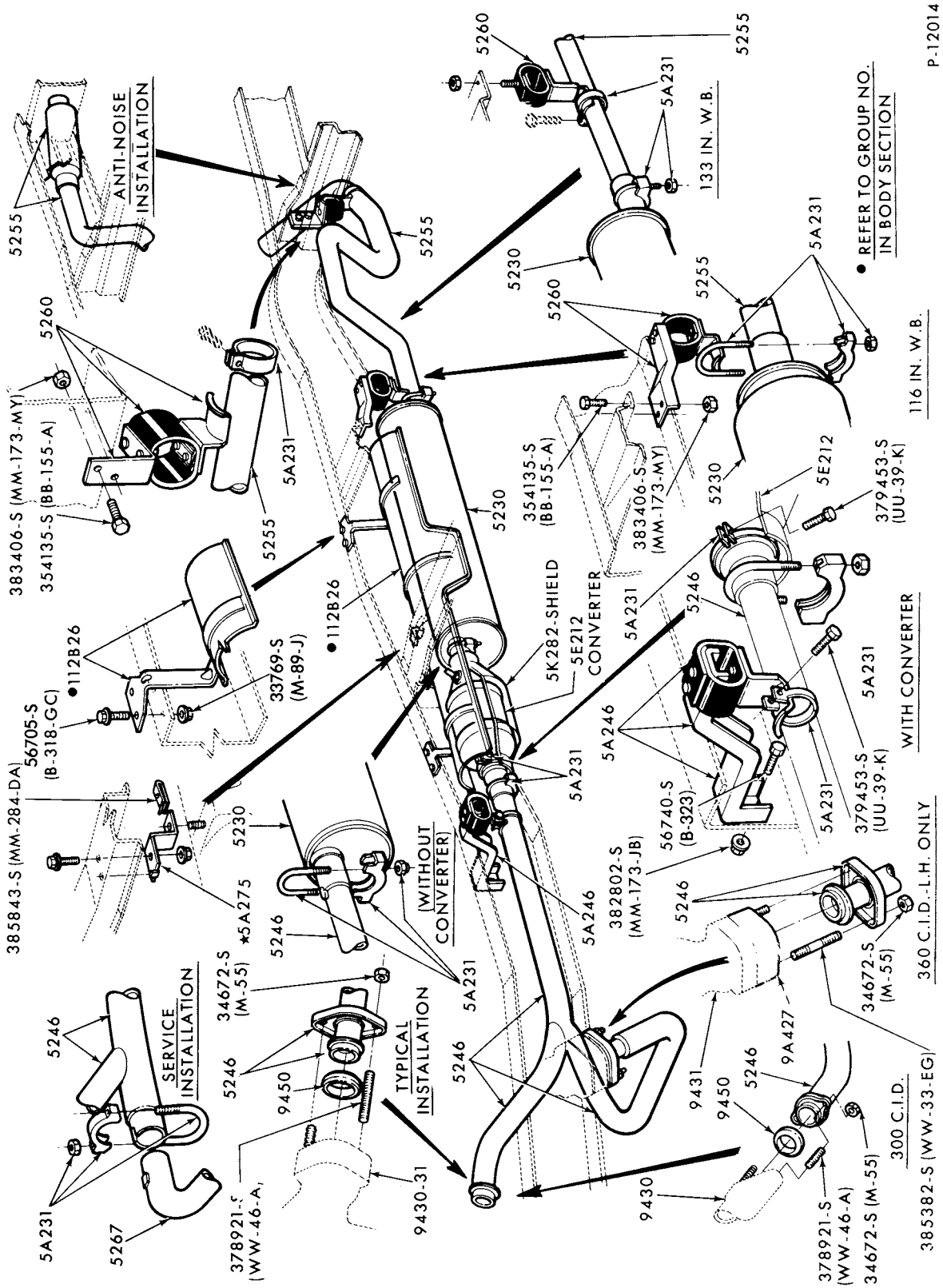

EXHAUST SYSTEM - w/ CONVERTER
1975/76 F100 (REGULAR CAB)--6 and 8 CYL. 300,302,360 and 390

COPYRIGHT © 1979 FORD MOTOR COMPANY, DEARBORN, MICHIGAN

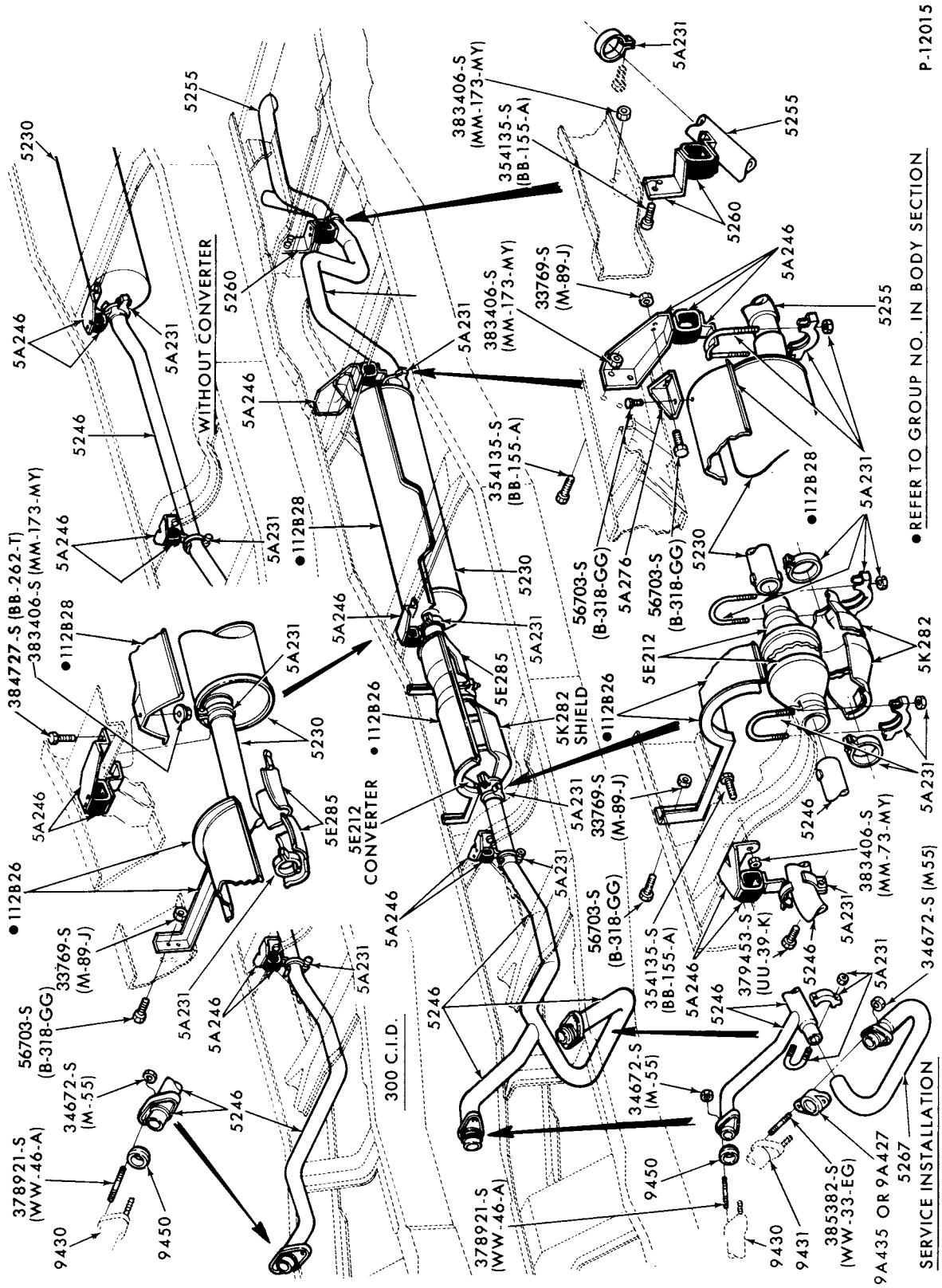

EXHAUST SYSTEM - w/ CONVERTER

1975/76 F100 (SUPER CAB)--2/W/D with 6 and 8 CYL. 300,360 and 3

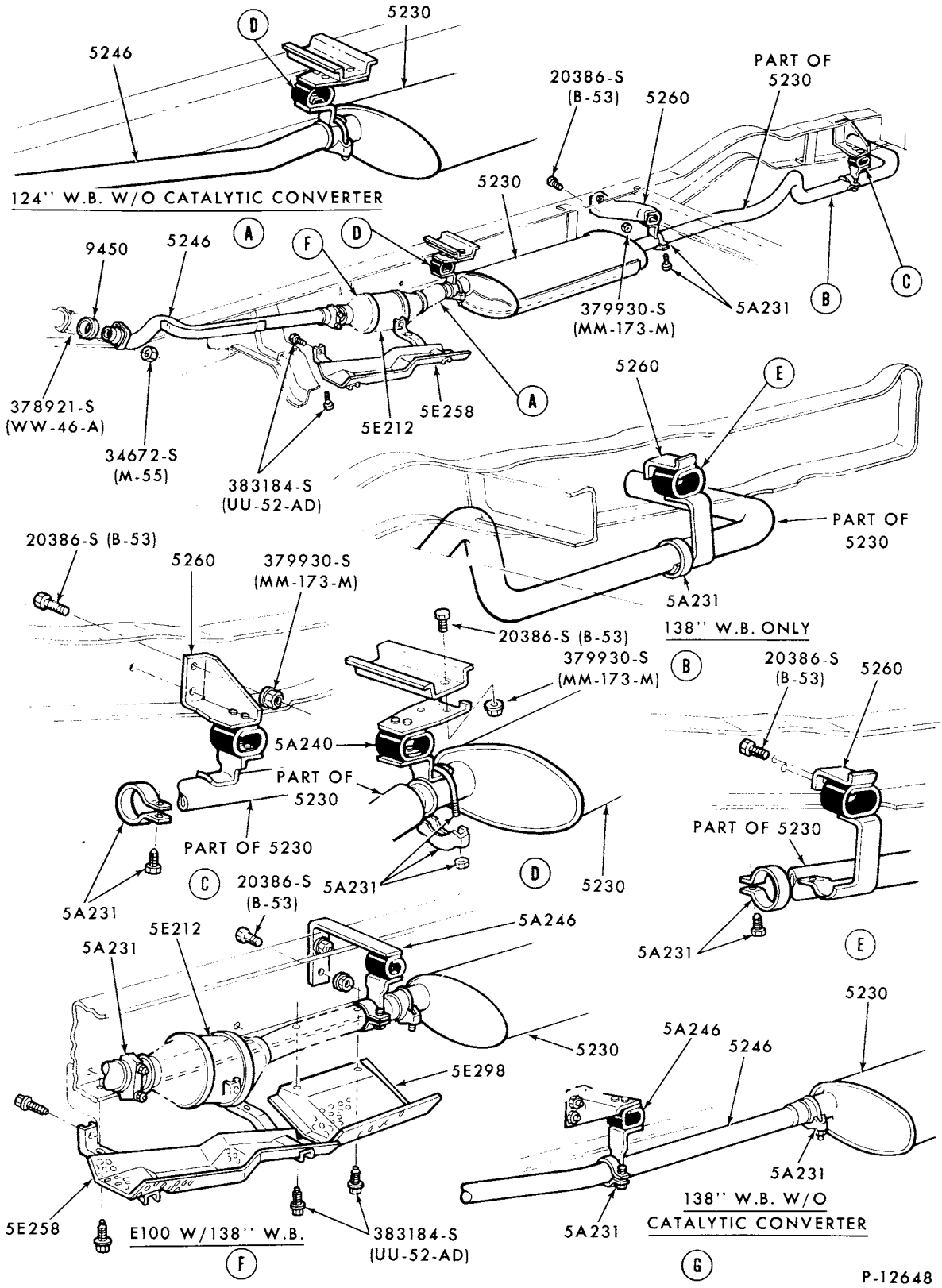

EXHAUST SYSTEM - w/ CONVERTER
1975/78 E100/350--6 CYL. 300 and 124",138" W/B

COPYRIGHT © 1979 FORD MOTOR COMPANY - DEARBORN, MICHIGAN

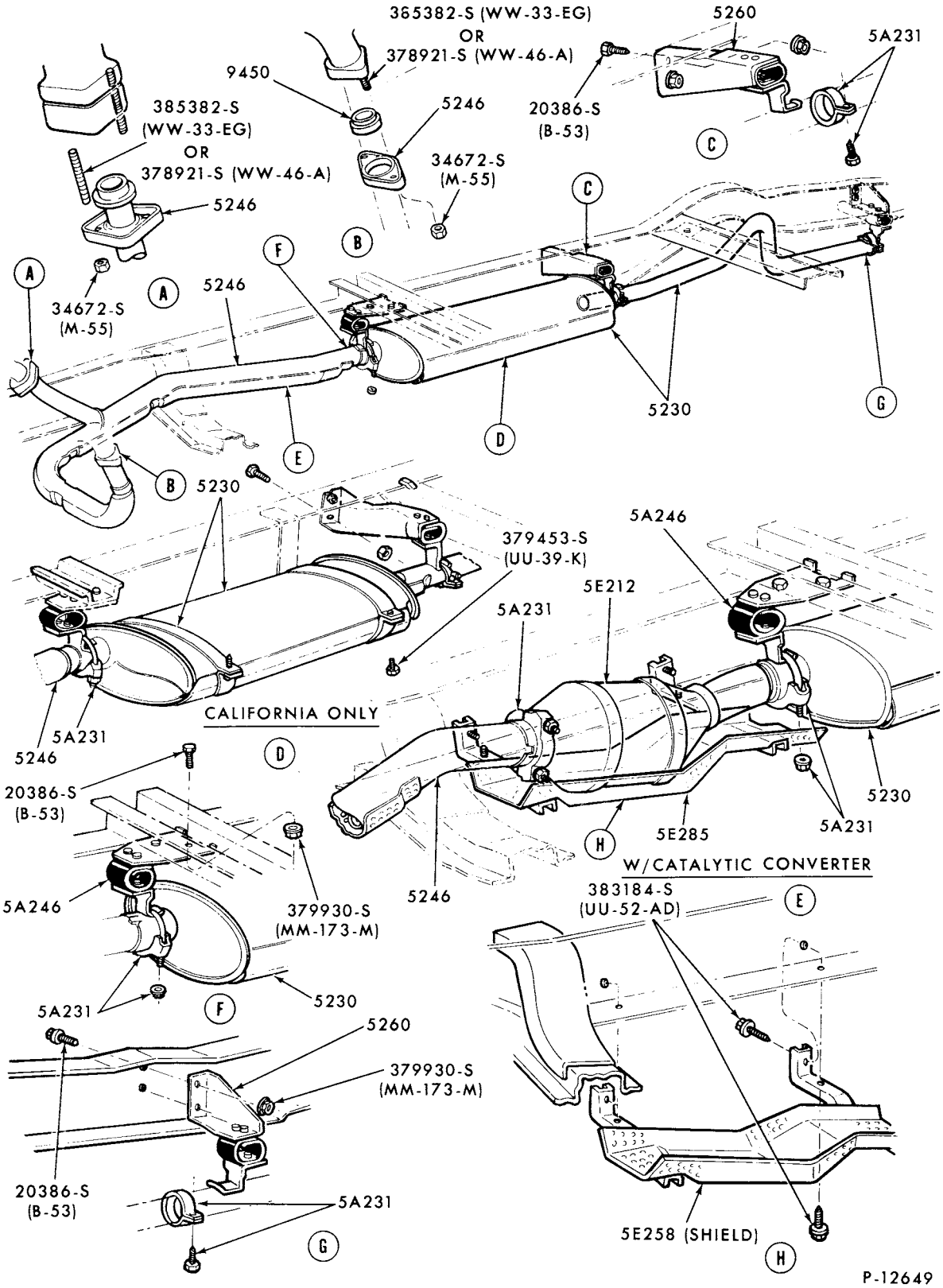

EXHAUST SYSTEM - w/ CONVERTER
1975/78 E100/350--8 CYL. 351 and 124" W/B

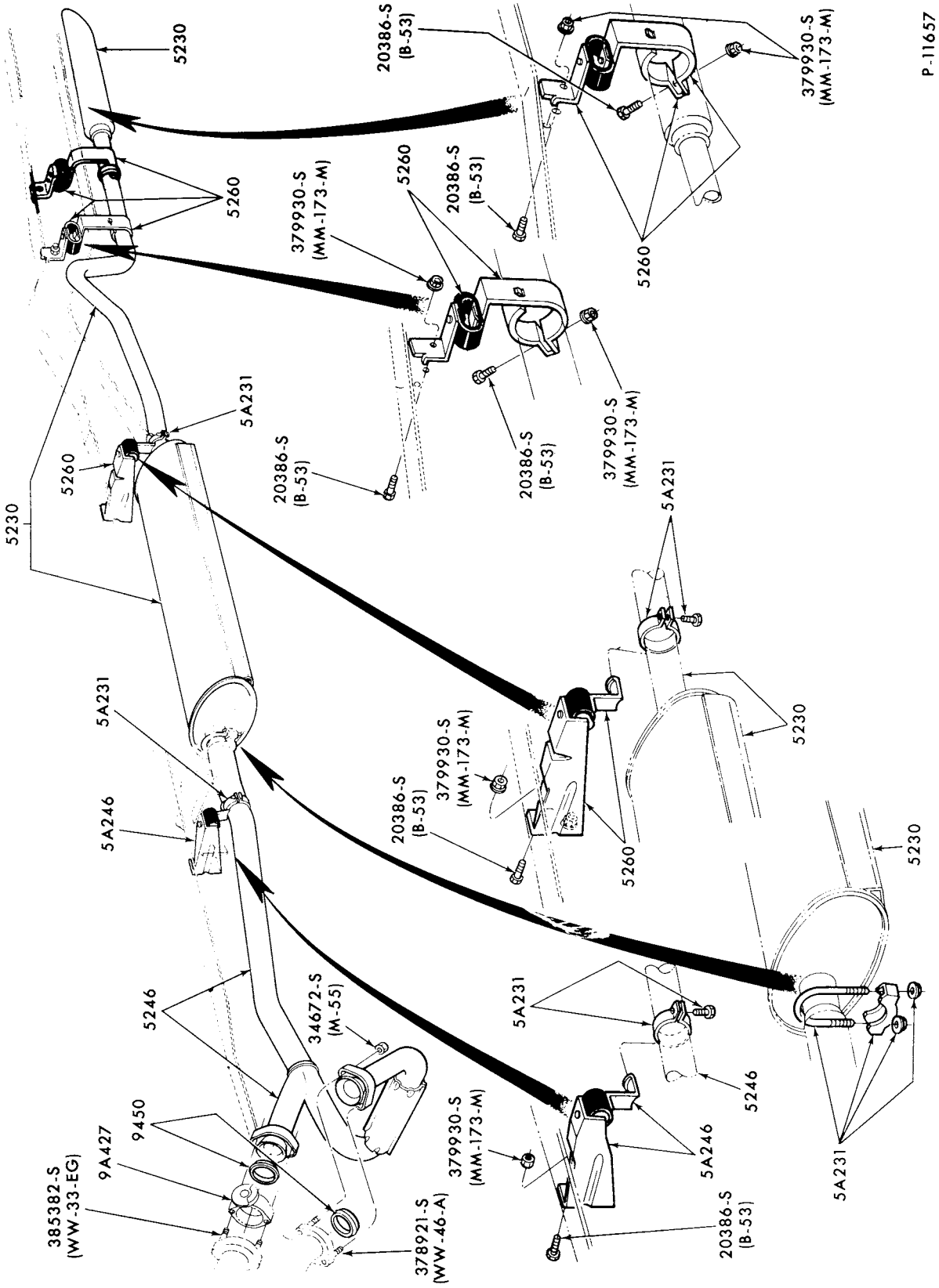

EXHAUST SYSTEM
1975/78 E250/350--8 CYL. 460

COPYRIGHT © 1979 FORD MOTOR COMPANY—DEARBORN, MICHIGAN

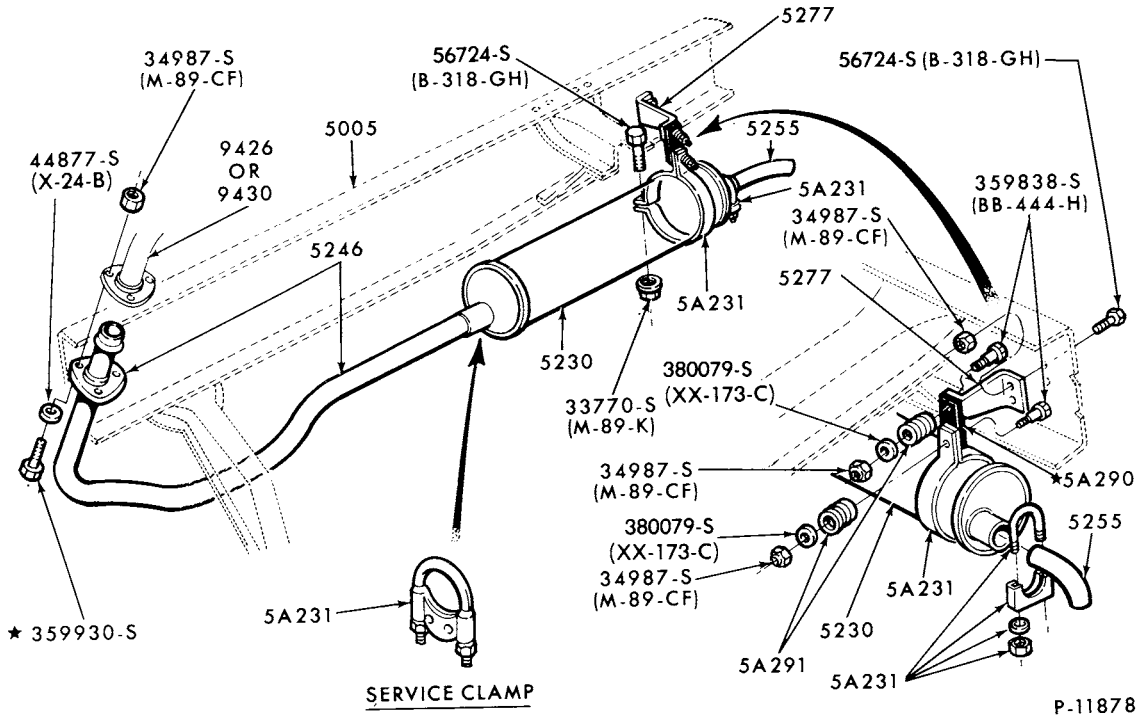

EXHAUST SYSTEM - w/MUFFLER STRAP & HANGER
1975/77 F500(81)--6 CYL. 300 - "FROM SER. V20,001"

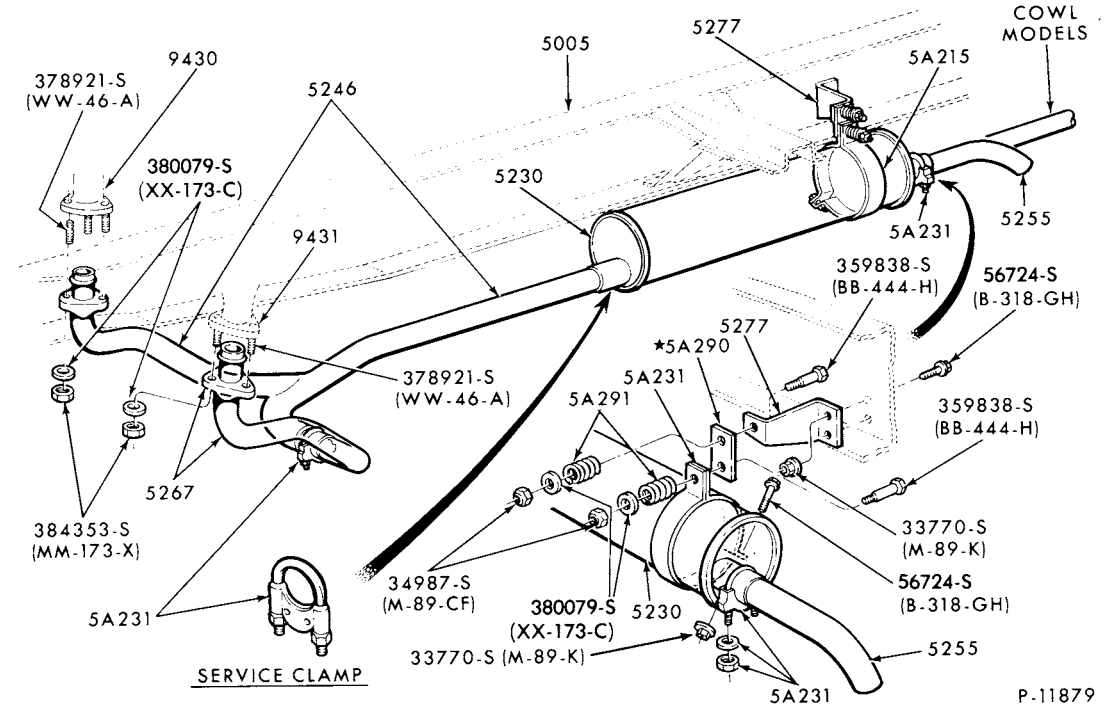

EXHAUST SYSTEM - w/MUFFLER STRAP & HANGER
1975/77 F500(81)--8 CYL. 330 - "FROM SER. V20,001"

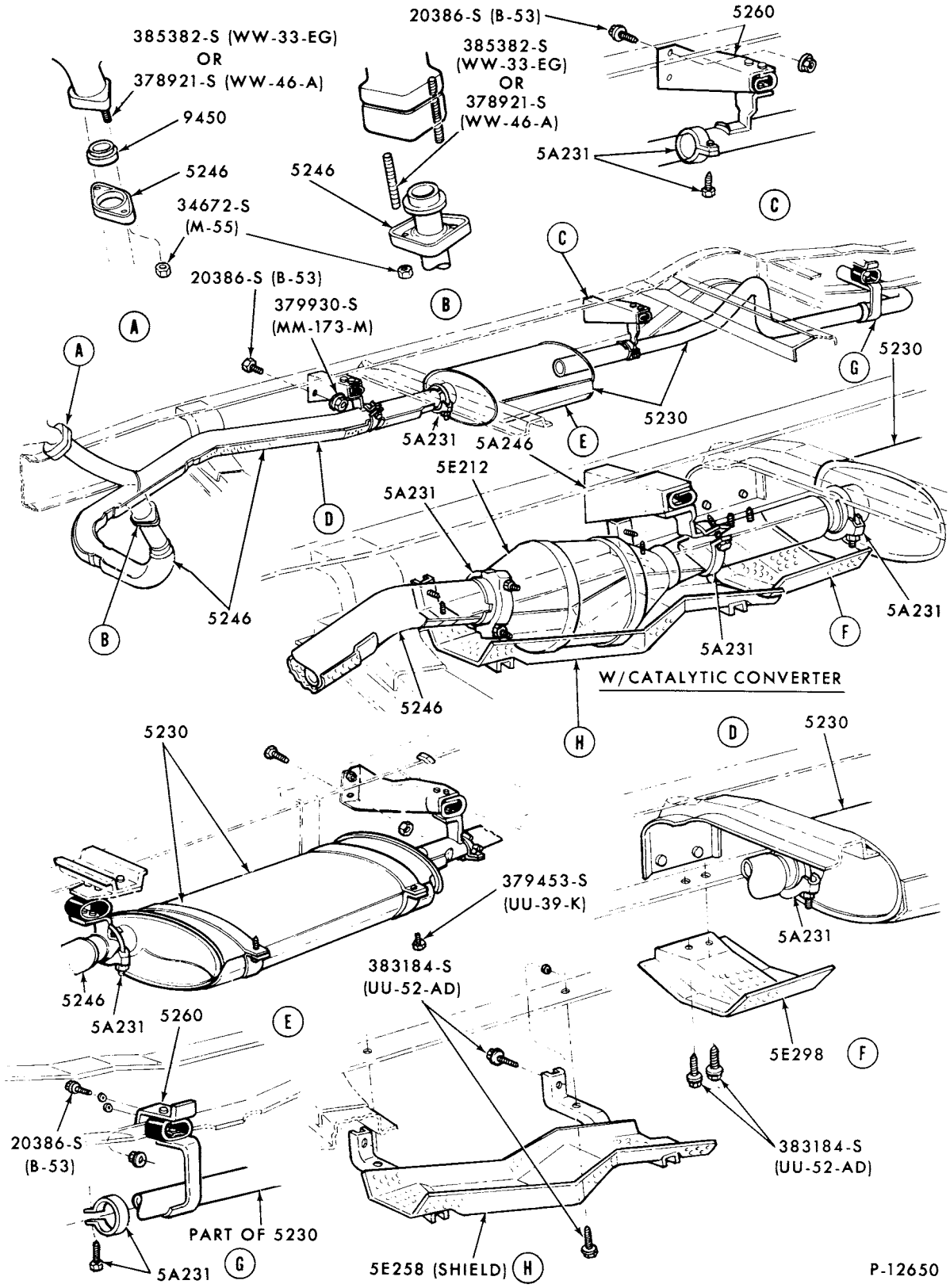

EXHAUST SYSTEM - w/ CONVERTER
1975/78 E100/350--8 CYL. 351 and 138" W/B

COPYRIGHT © 1979 FORD MOTOR COMPANY - DEARBORN, MICHIGAN

1973/79
TRUCK SERIES 100/500

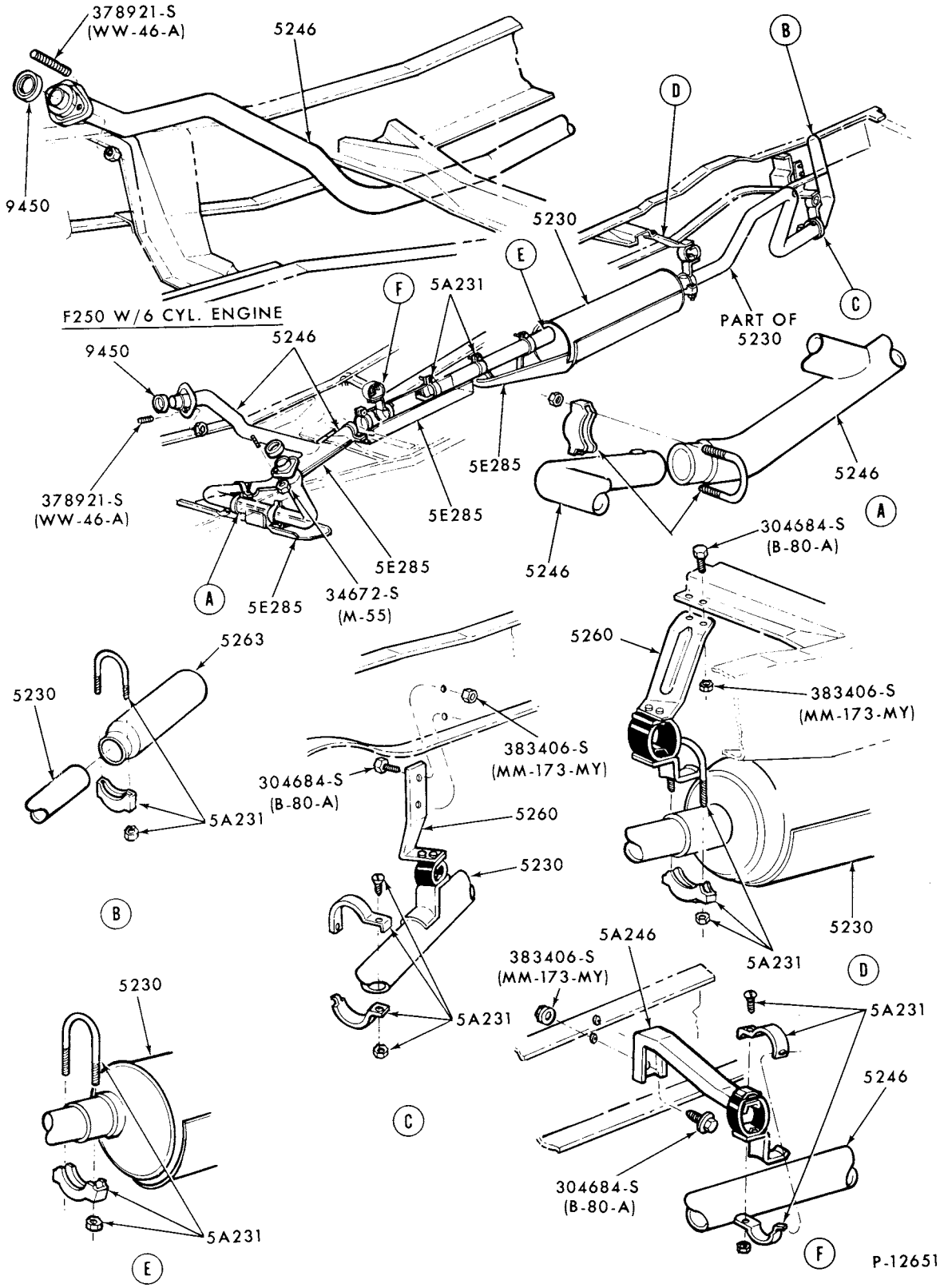

EXHAUST SYSTEM

1975/76 F250 (REGULAR CAB)--4/W/D and 6 CYL. 300 and 8 CYL. 360

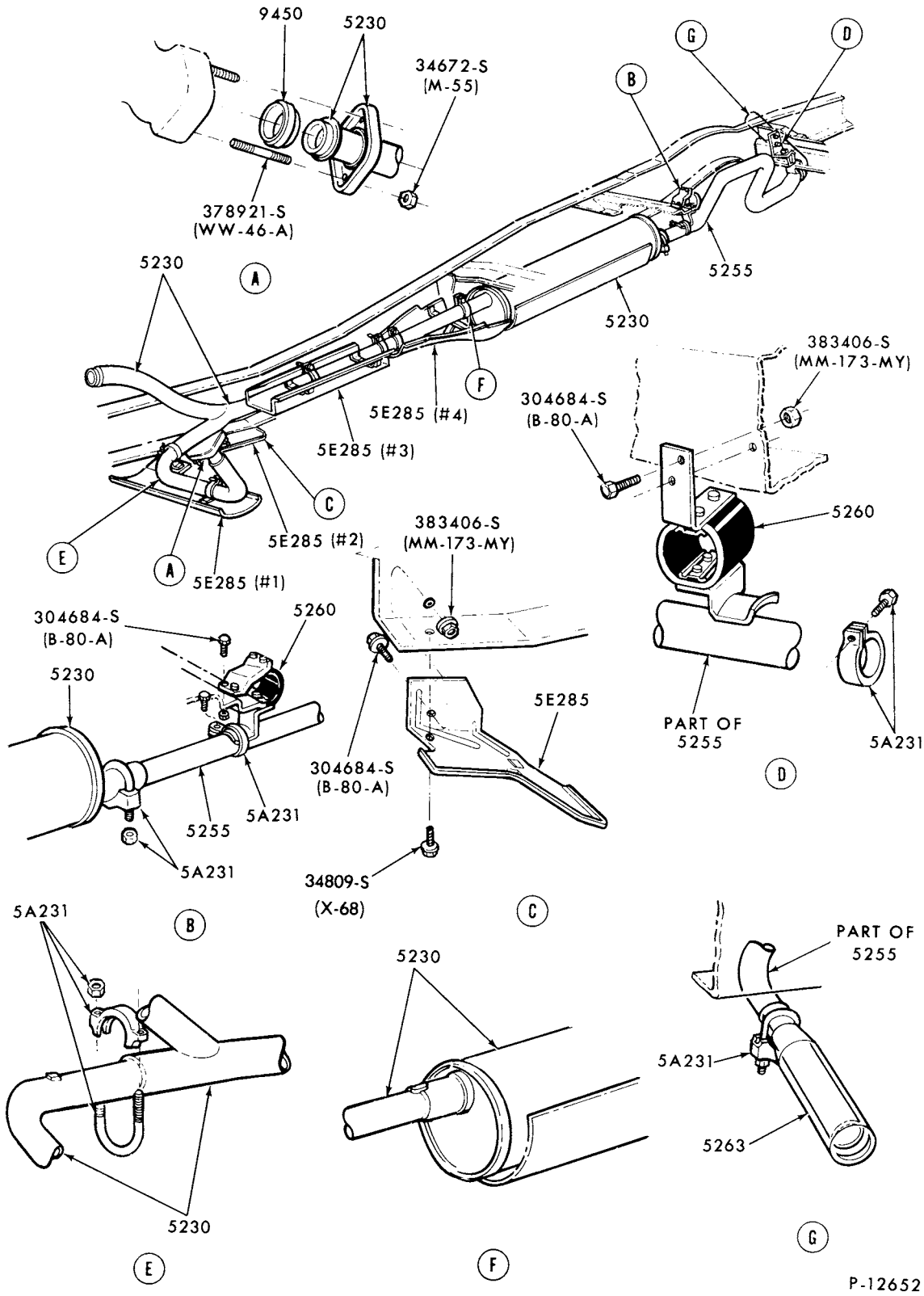

EXHAUST SYSTEM

1975/76 F150/250 (REGULAR CAB)--6 CYL. 300 and 8 CYL. 360

COPYRIGHT © 1979 FORD MOTOR COMPANY—DEARBORN, MICHIGAN

1973/79
TRUCK SERIES 100/500

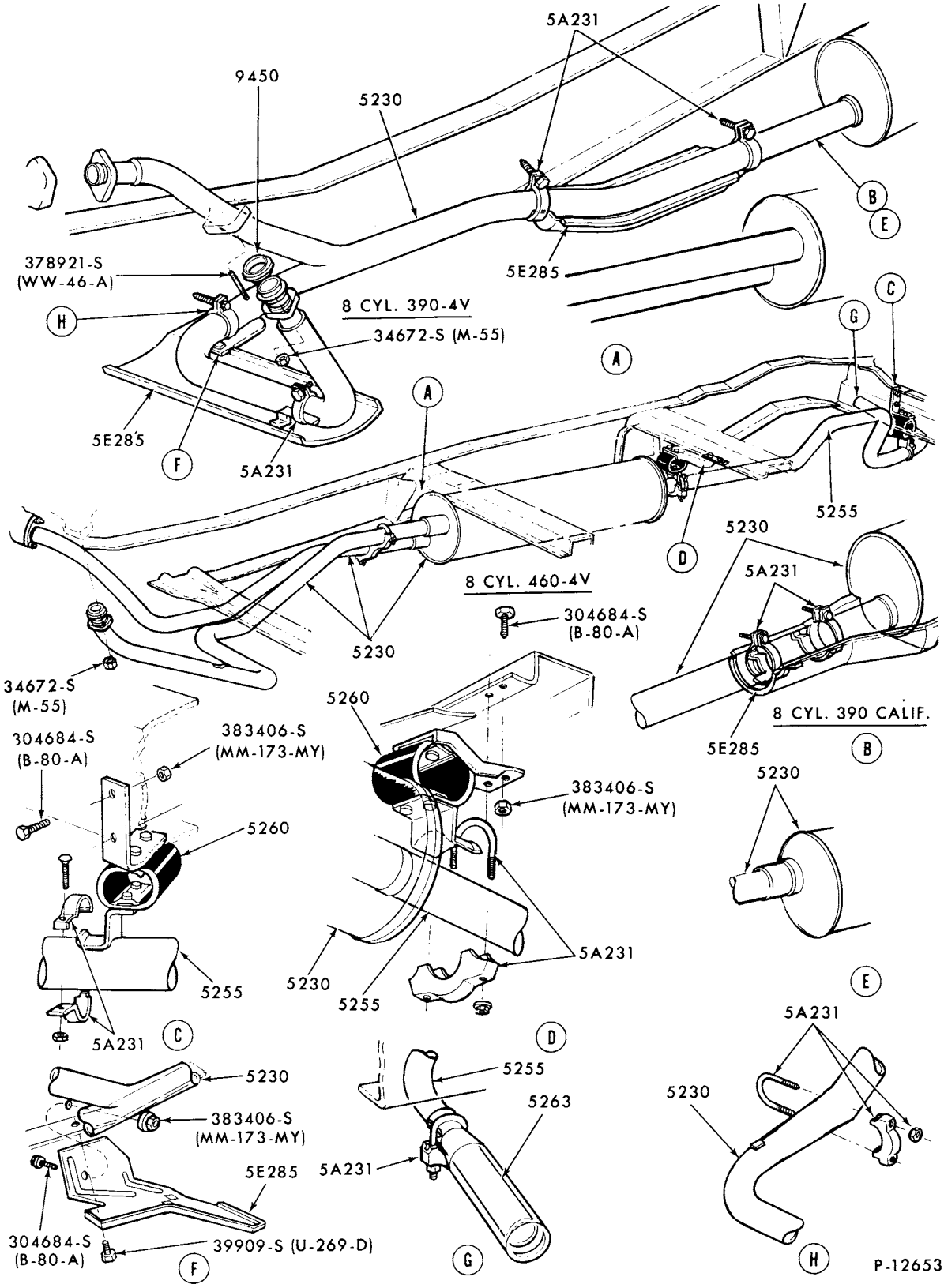

EXHAUST SYSTEM
1975/76 F150/250 (REGULAR CAB)--8 CYL. 390 and 460

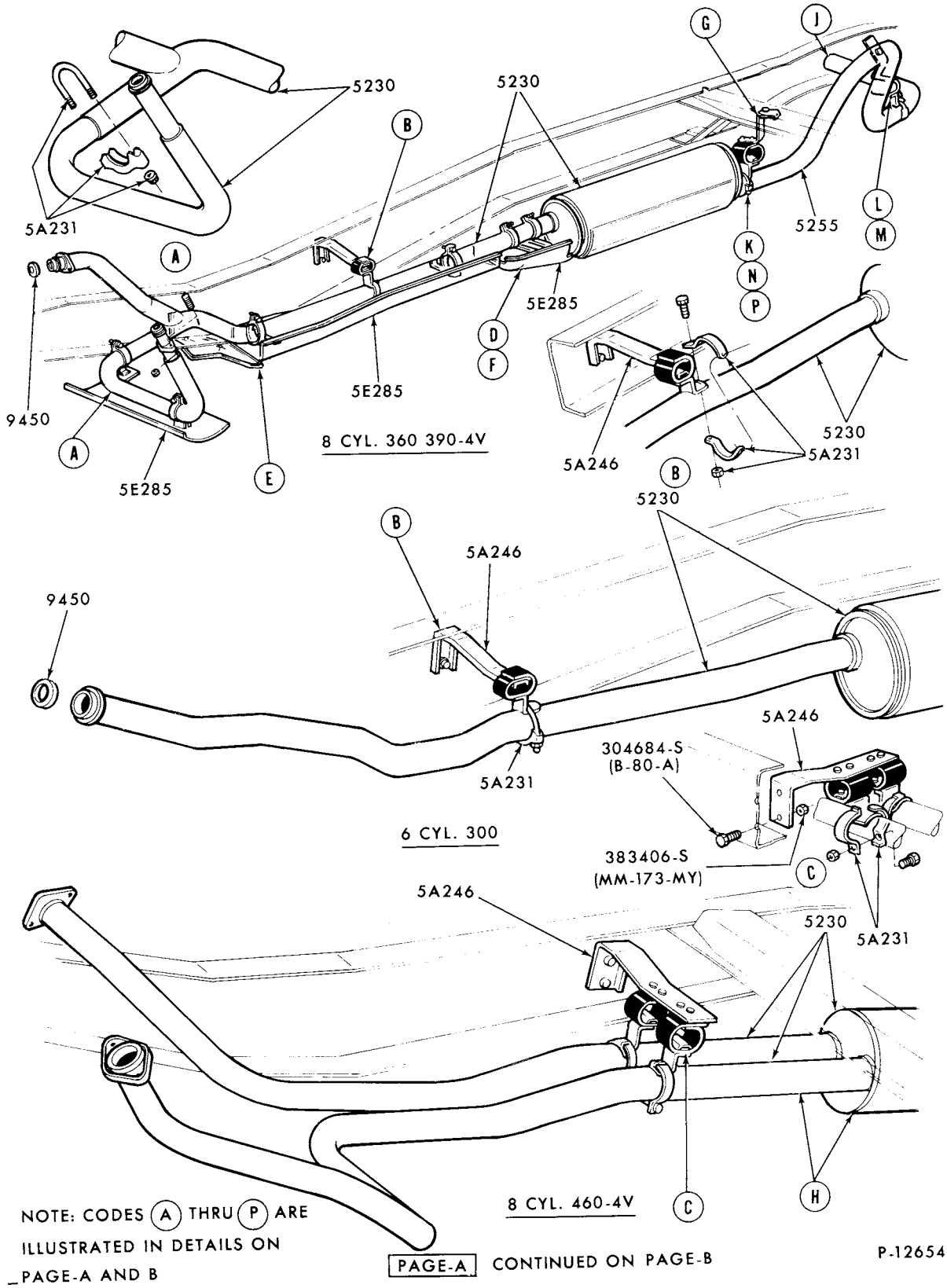

EXHAUST SYSTEM (PAGE A)

1975/76 F350 (REGULAR CAB)--6 CYL. 300 and 8 CYL. 360, 390 and 460

COPYRIGHT © 1979 FORD MOTOR COMPANY—DEARBORN, MICHIGAN

1973/79
TRUCK SERIES 100/500

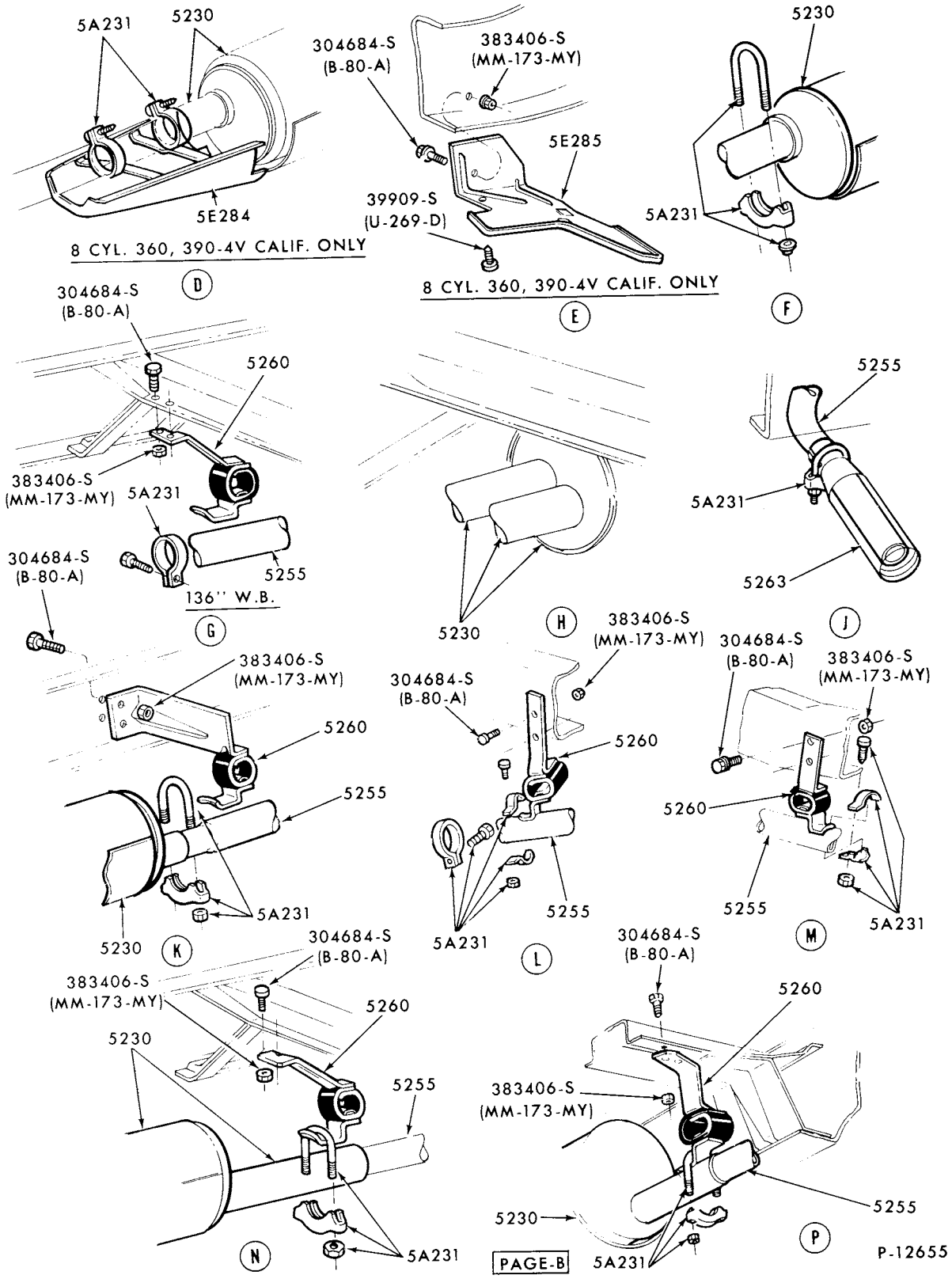

EXHAUST SYSTEM (PAGE B)

1975/76 F350 (REGULAR CAB)--6 CYL. 300 and 8 CYL. 360,390 and 460

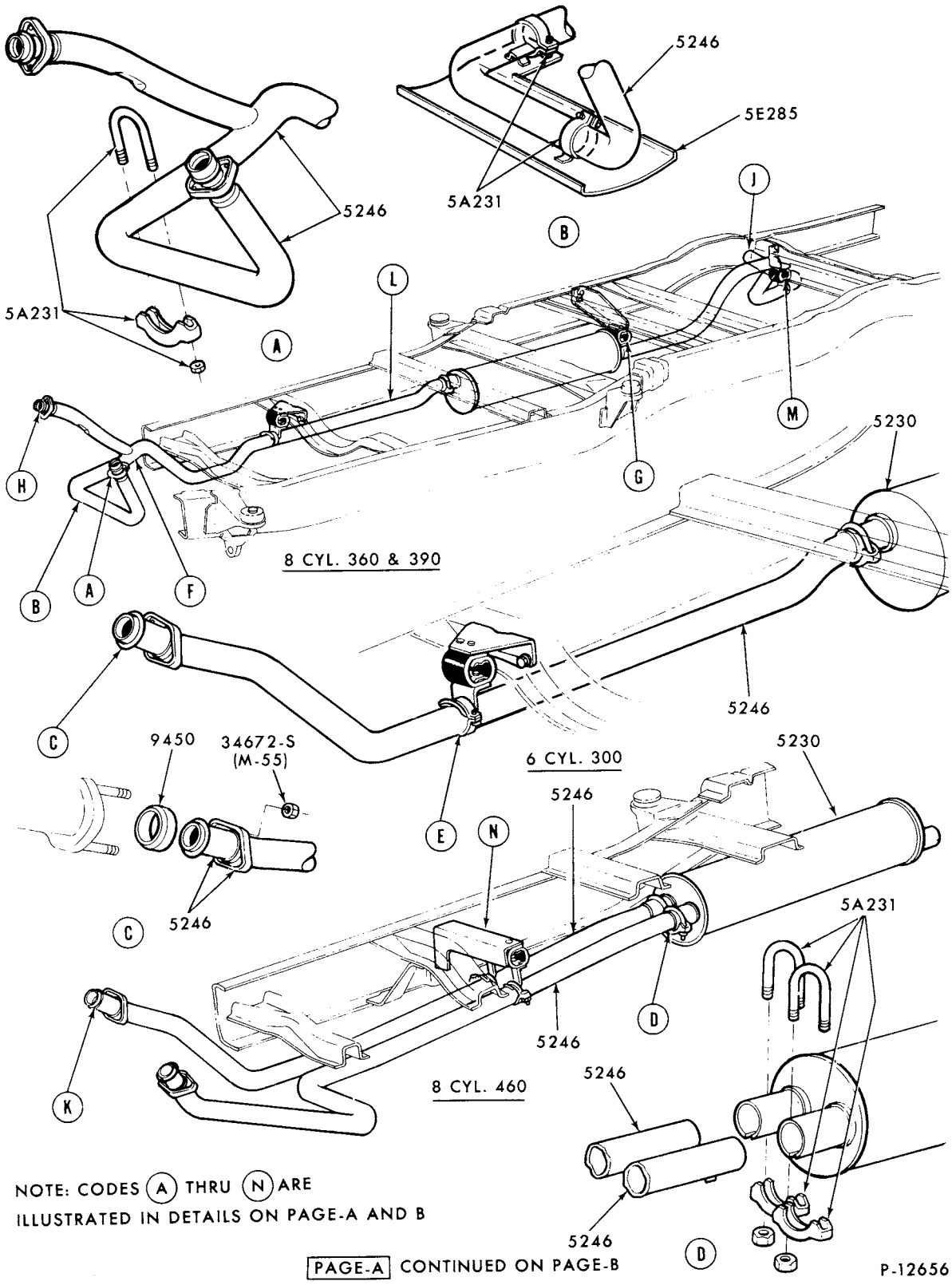

NOTE: CODES (A) THRU (N) ARE ILLUSTRATED IN DETAILS ON PAGE-A AND B

PAGE-A CONTINUED ON PAGE-B

EXHAUST SYSTEM (PAGE A)

1975/76 F150/350 (SUPER CAB)--6 CYL. 300 and 8 CYL. 360,390 and 460

COPYRIGHT © 1979 FORD MOTOR COMPANY - DEARBORN, MICHIGAN

1973/79
TRUCK SERIES 100/500

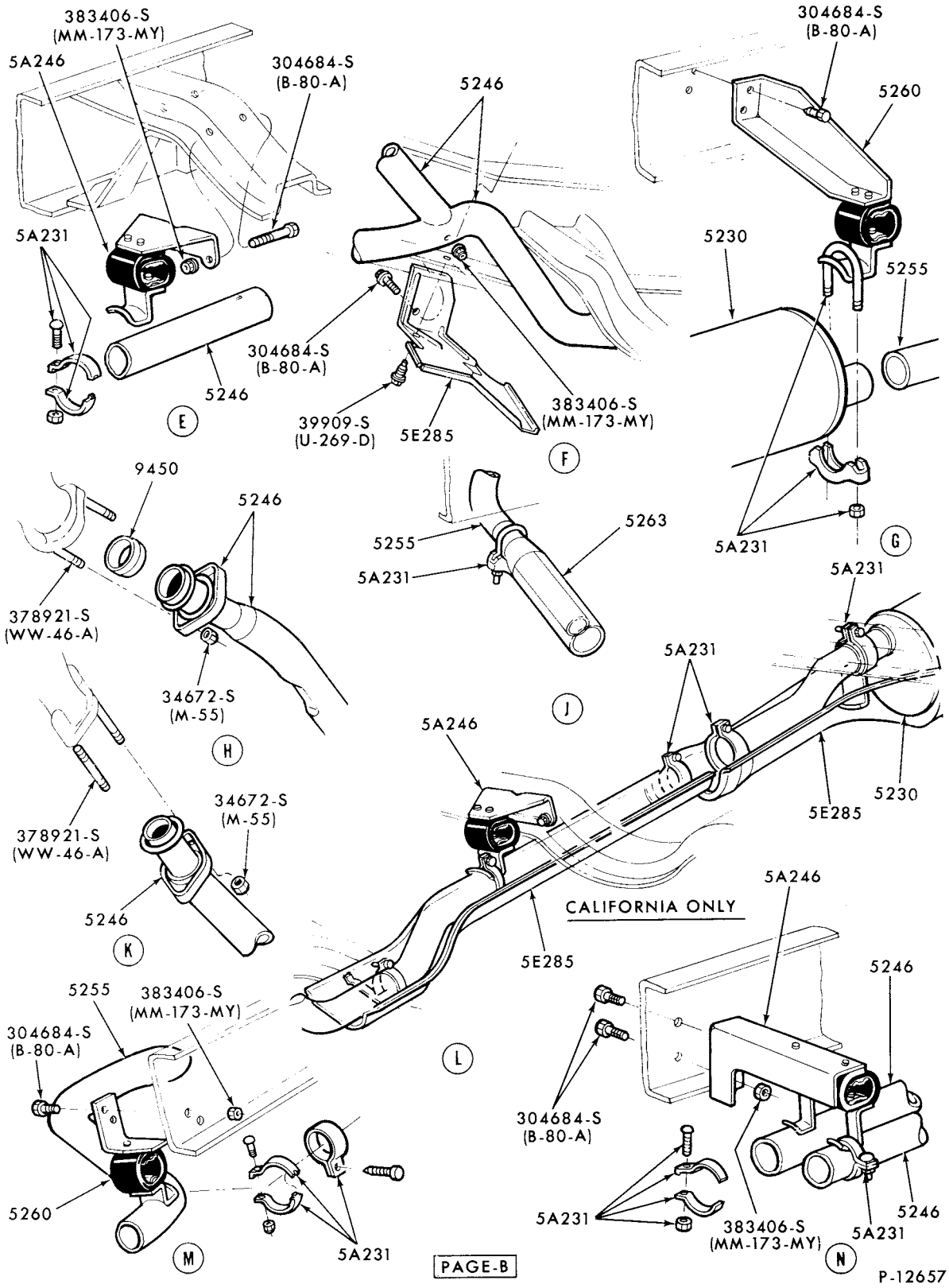

EXHAUST SYSTEM (PAGE B)
1975/76 F150/350 (SUPER CAB)--6 CYL. 300 and 8 CYL. 360,390 and 460

1973/79 TRUCK SERIES 100/500

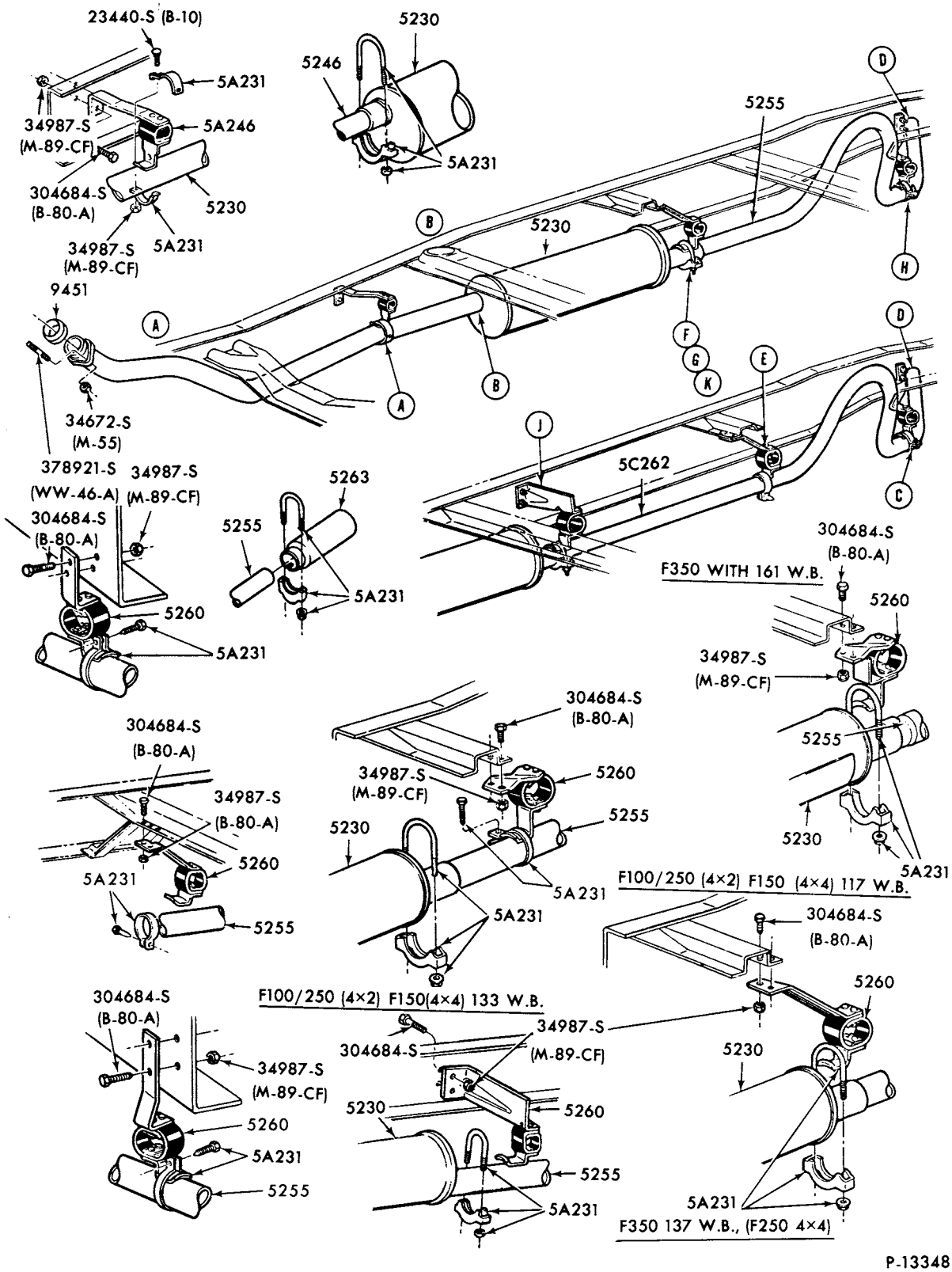

EXHAUST SYSTEM

1977/78 F100/350, F150/250--4/W/D (REGULAR CAB)--6 CYL. 300

COPYRIGHT © 1979 -FORD MOTOR-DEARBORN, MICHIGAN COMPANY

1973/79
TRUCK SERIES 100/500

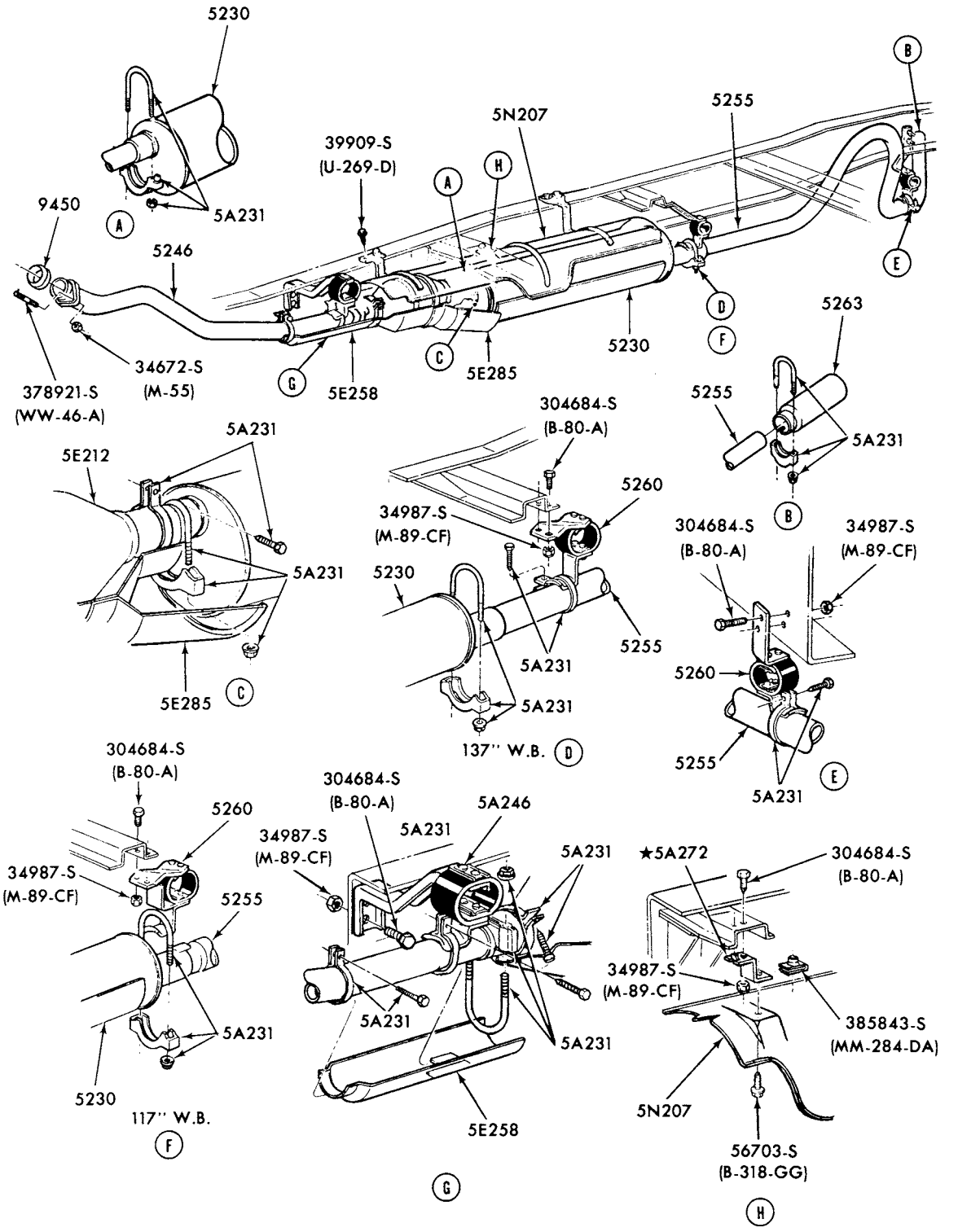

EXHAUST SYSTEM - w/ CONVERTER
1977/78 F100/250,F150--4/W/D (REGULAR CAB)--6 CYL. 300

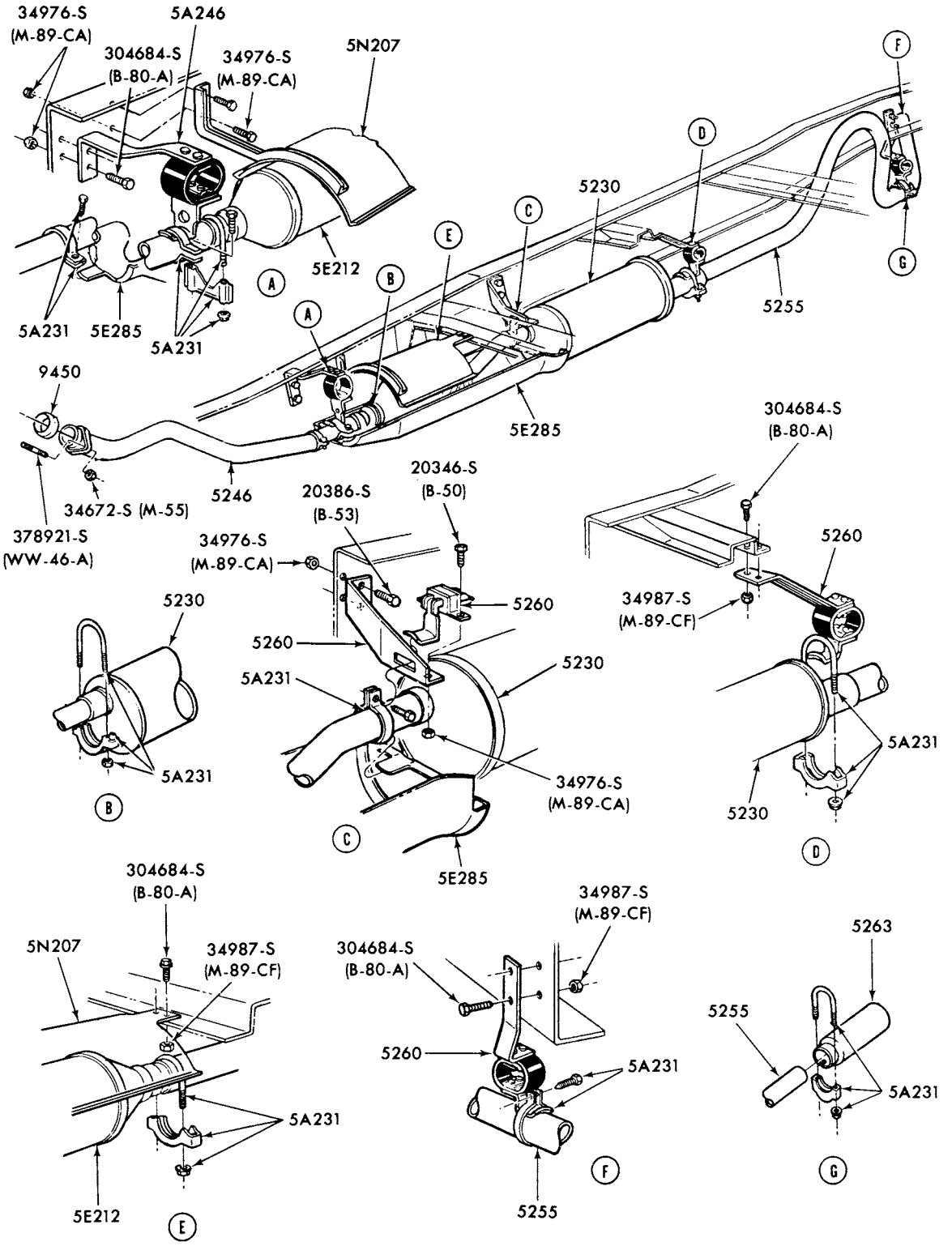

EXHAUST SYSTEM - w/ CONVERTER

1977/78 F250--4/W/D (REGULAR CAB)--6 CYL. 300

COPYRIGHT © 1979 FORD MOTOR COMPANY, DEARBORN, MICHIGAN

1973/79
TRUCK SERIES 100/500

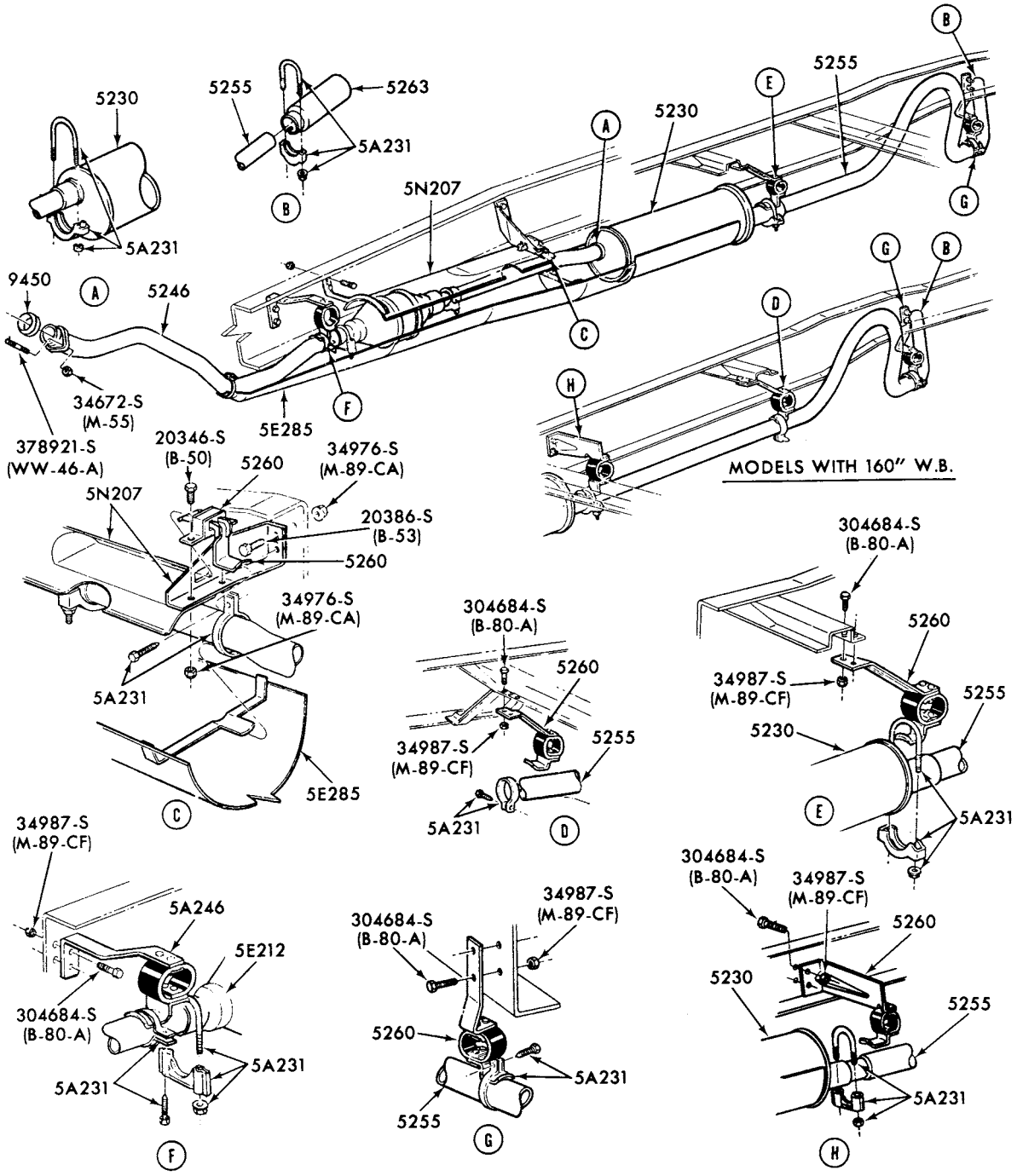

P-13351

EXHAUST SYSTEM - w/ CONVERTER
1977/78 F350 (REGULAR CAB)--6 CYL. 300

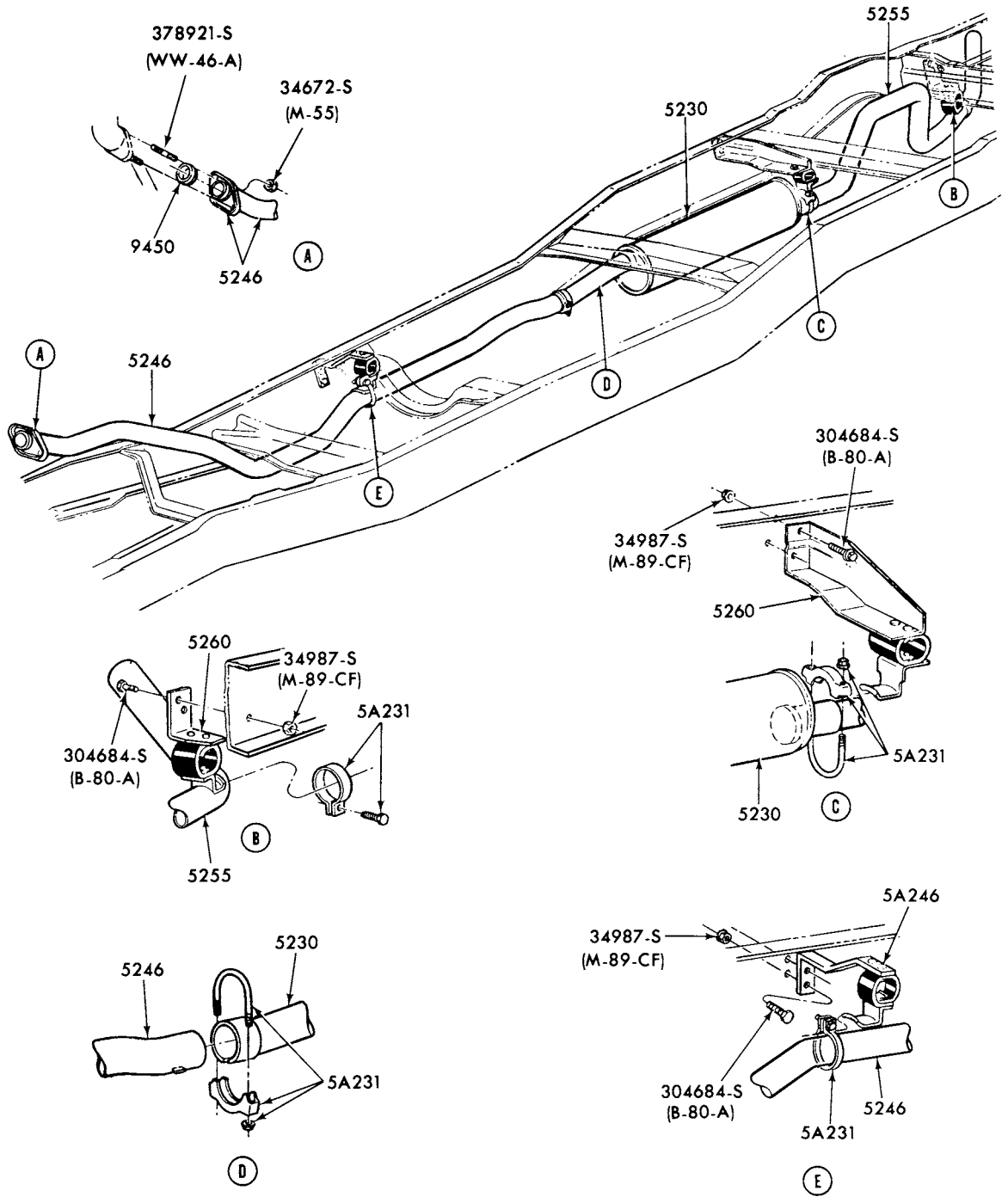

P-13352

EXHAUST SYSTEM
1977/78 F100/250 (SUPER CAB)--6 CYL. 300

COPYRIGHT © 1978 FORD MOTOR COMPANY, DEARBORN, MICHIGAN

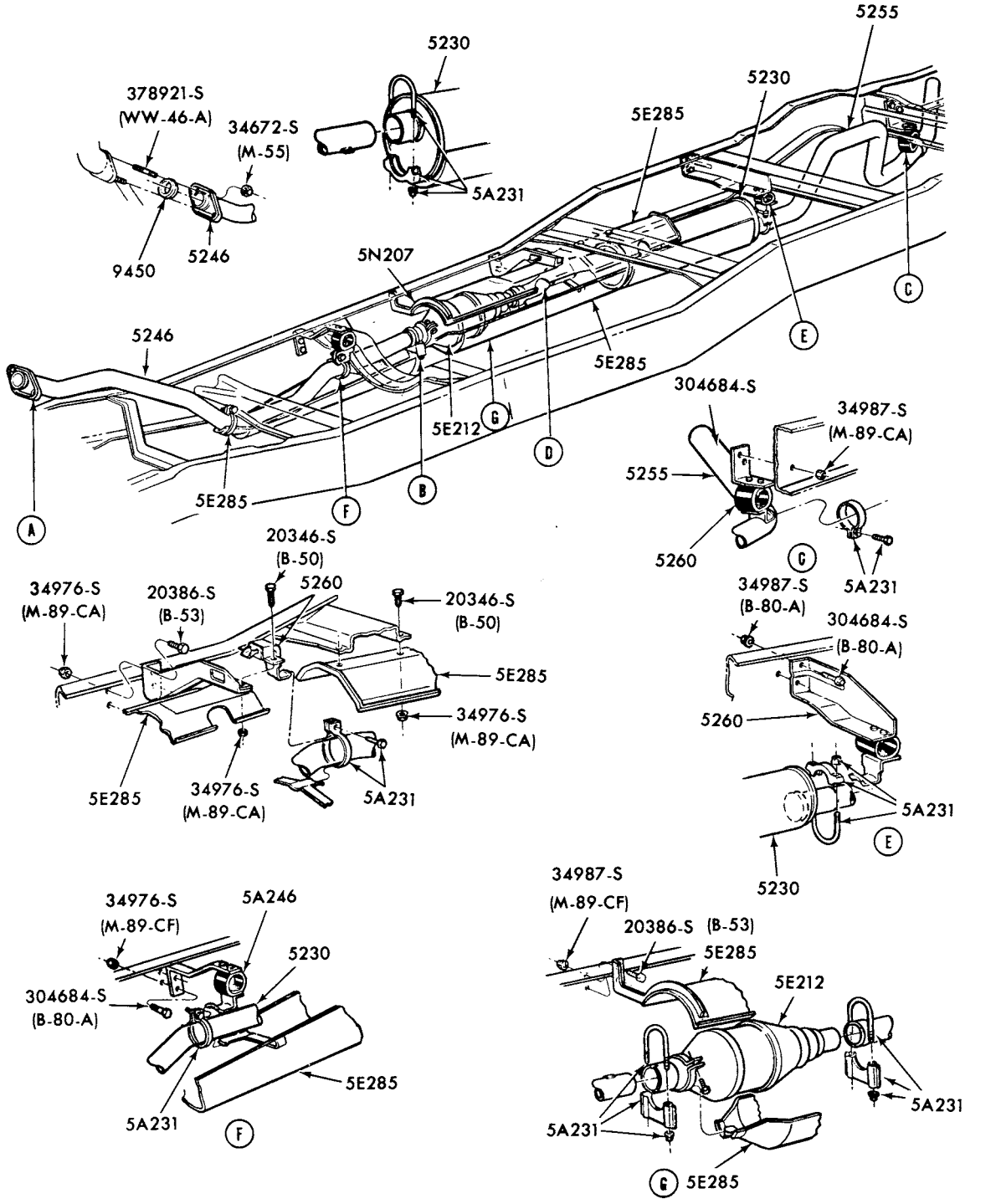

EXHAUST SYSTEM - w/ CONVERTER
1977/78 F100/250 (SUPER CAB)--6 CYL. 300

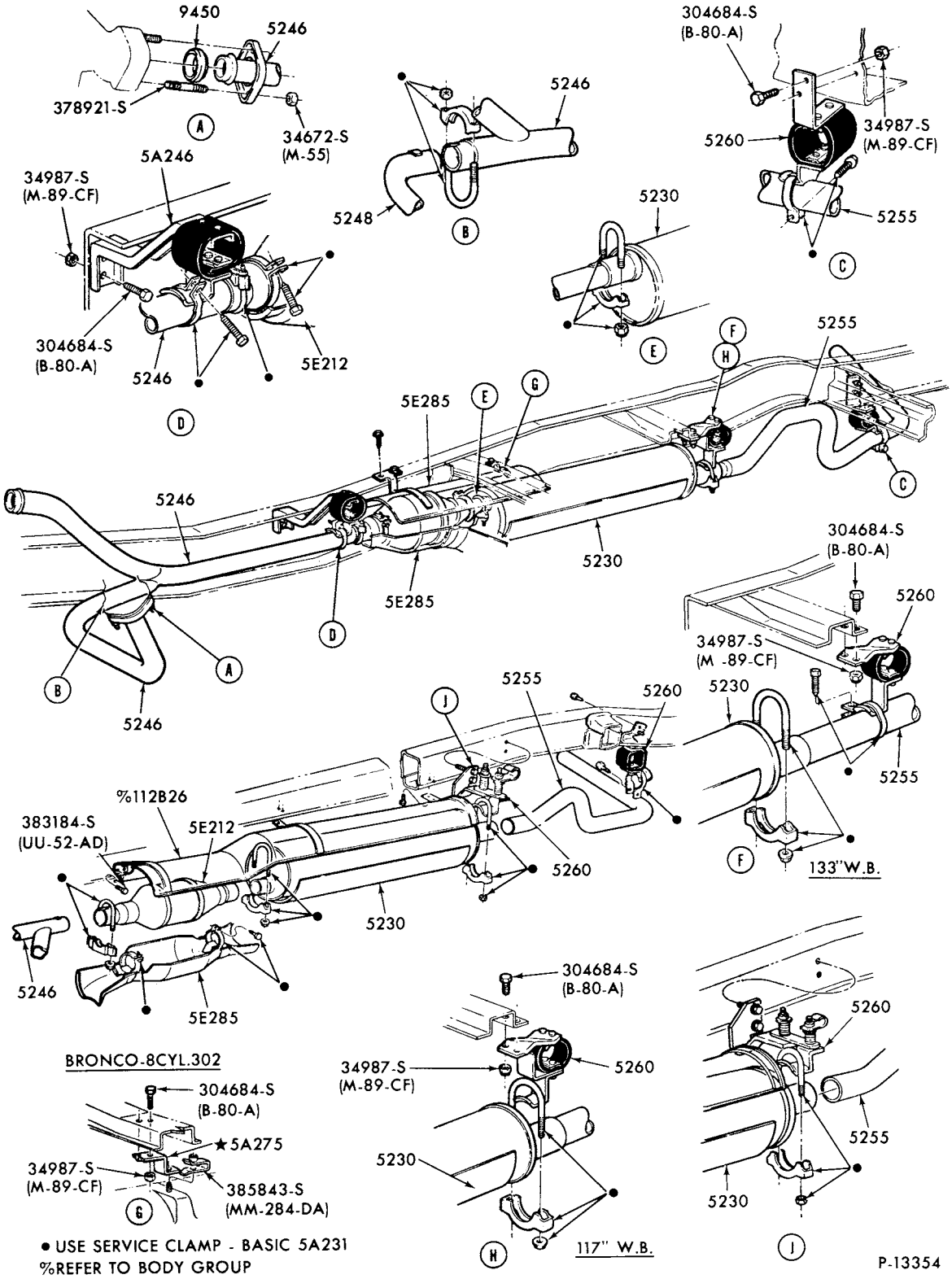

EXHAUST SYSTEM - w/ CONVERTER
1977/78 F100 (REGULAR CAB)--8 CYL. 302

COPYRIGHT © 1979 FORD MOTOR COMPANY, DEARBORN, MICHIGAN

1973/79 TRUCK SERIES 100/500

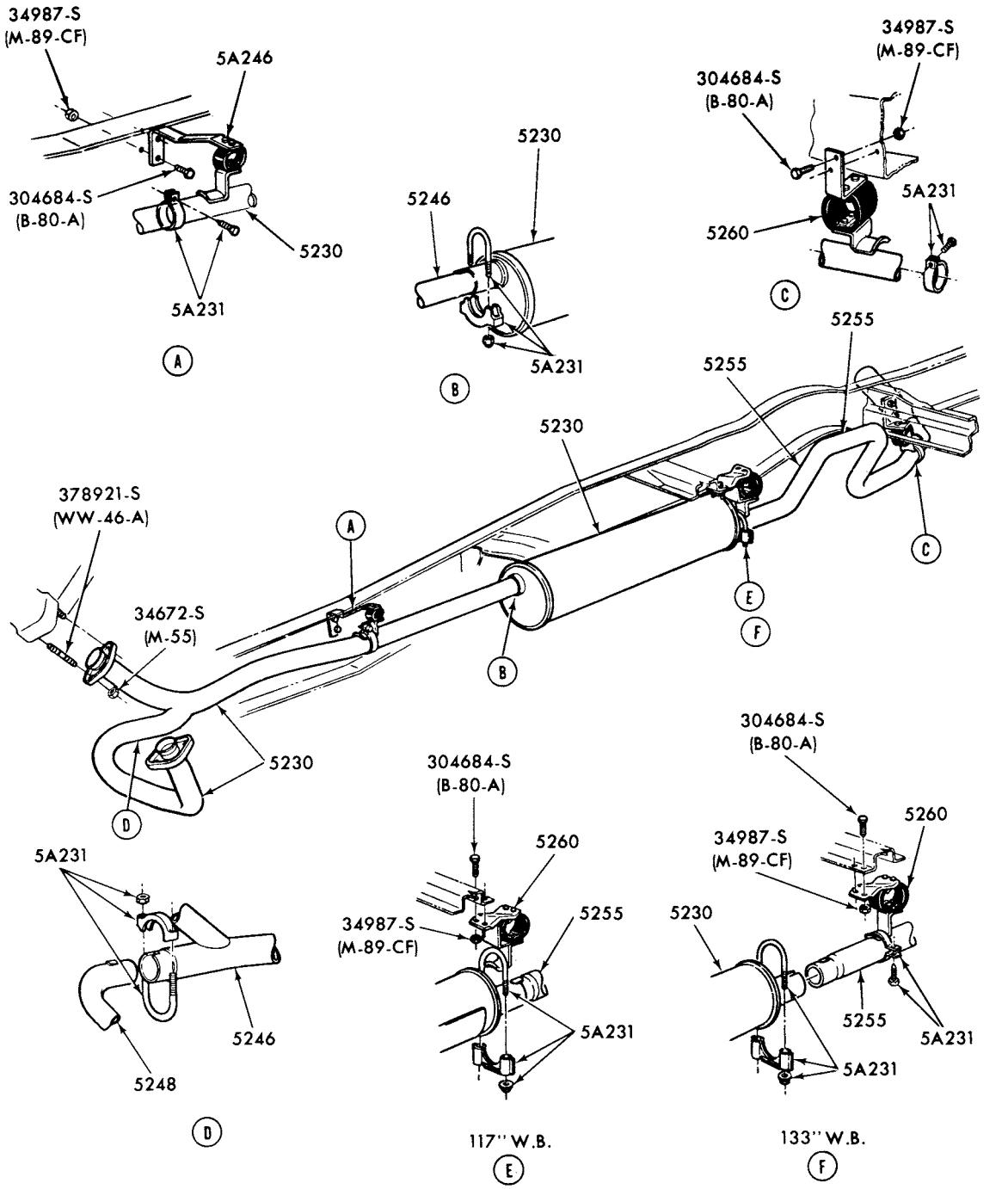

P-13355

EXHAUST SYSTEM
1977/78 F100/350 (REGULAR CAB)--8 CYL. 351M and 400

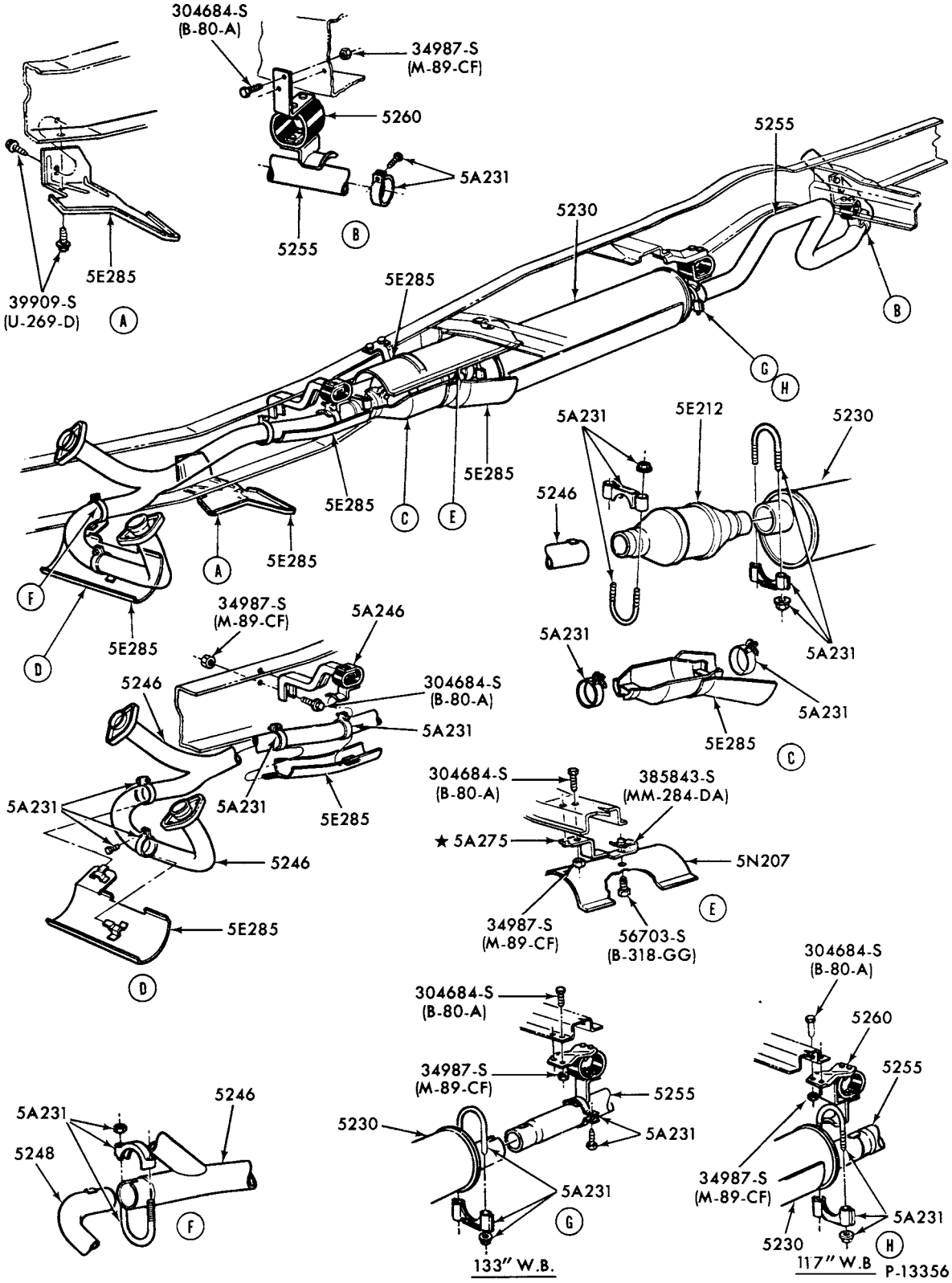

EXHAUST SYSTEM - w/ CONVERTER
1977/78 F100/250 (REGULAR CAB)--8 CYL. 351M and 400

COPYRIGHT © 1979 FORD MOTOR COMPANY - DEARBORN, MICHIGAN

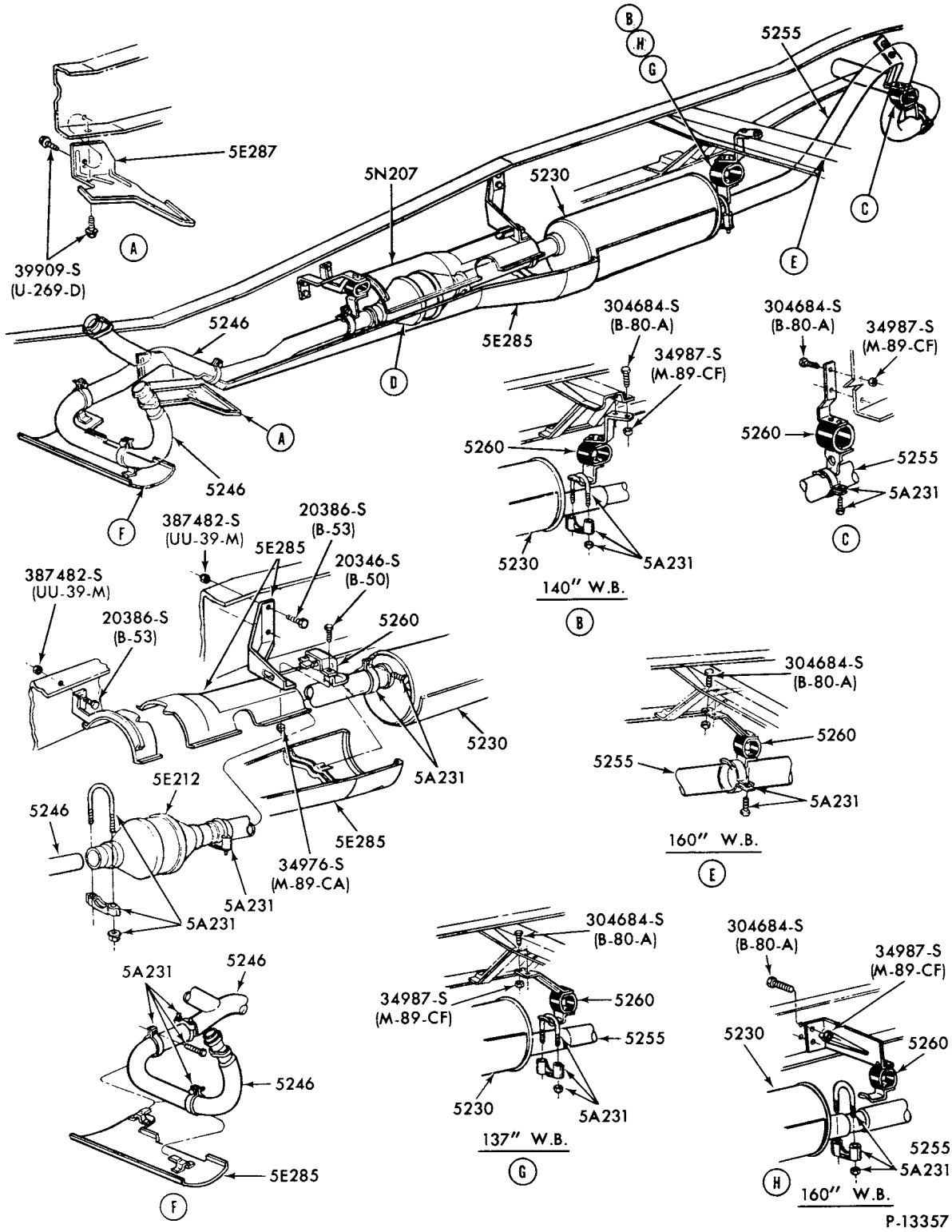

EXHAUST SYSTEM - w/ CONVERTER
1977/78 F350 (REGULAR CAB)--8 CYL. 351M and 400

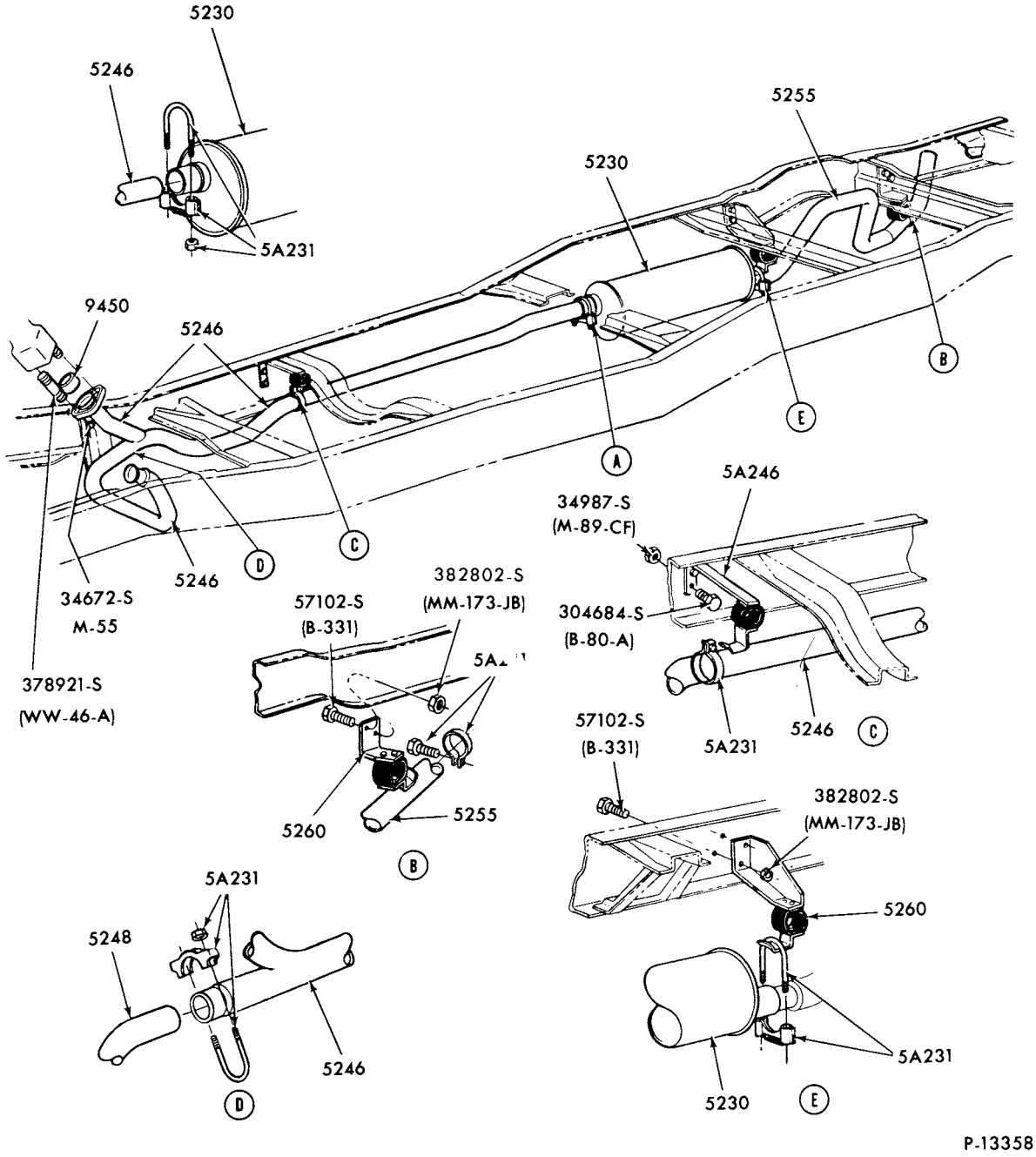

P-13358

EXHAUST SYSTEM

1977/78 F100/350 (SUPER CAB)--8 CYL. 351M and 400

COPYRIGHT © 1979 FORD MOTOR COMPANY, DEARBORN, MICHIGAN

1973/79 TRUCK SERIES 100/500

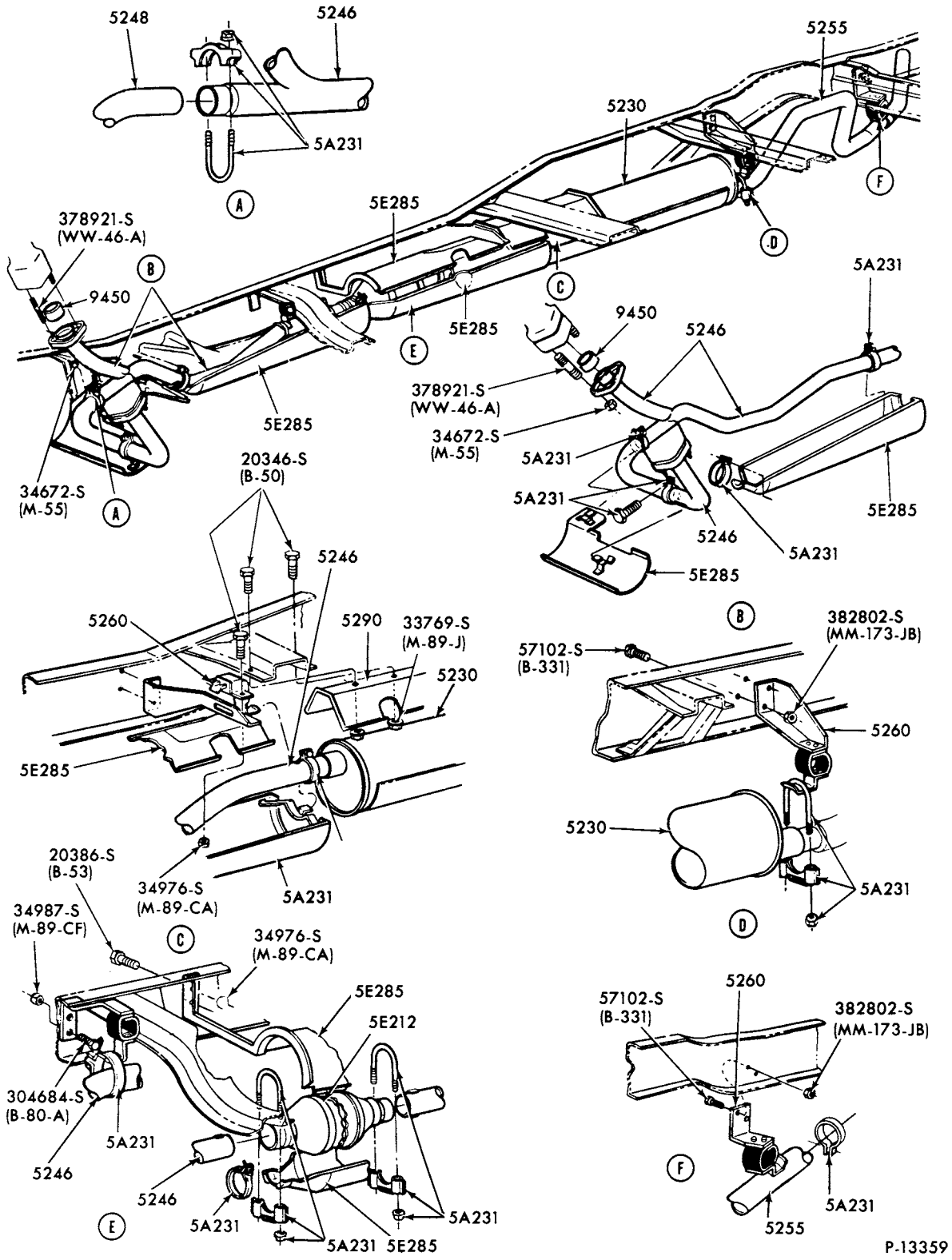

EXHAUST SYSTEM - w/ CONVERTER

1977/78 F100/350 (SUPER CAB)--8 CYL. 351M and 400

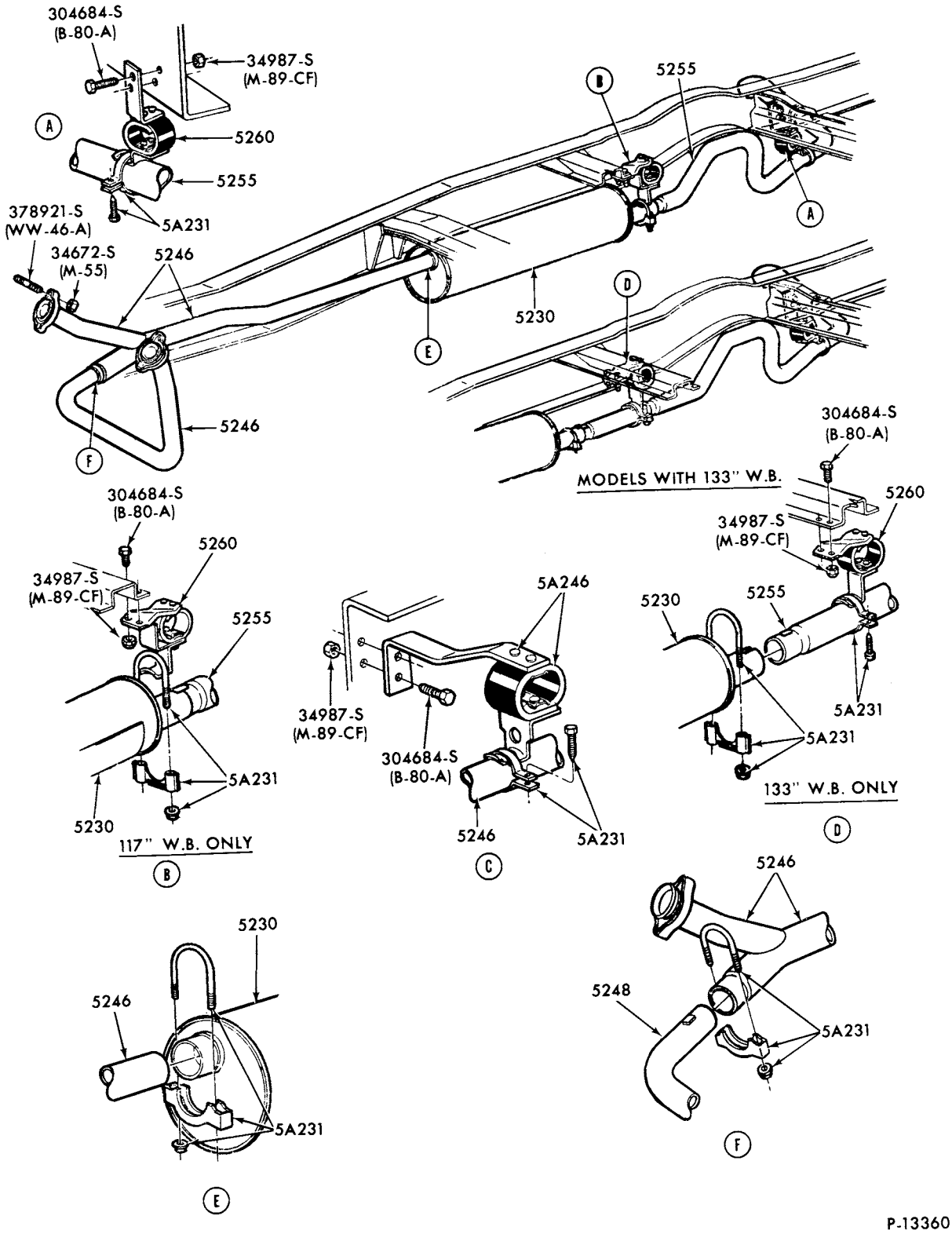

EXHAUST SYSTEM

1977/78 F150--4/W/D (REGULAR CAB)--8 CYL. 351M and 400

COPYRIGHT © 1979 FORD MOTOR COMPANY, DEARBORN, MICHIGAN

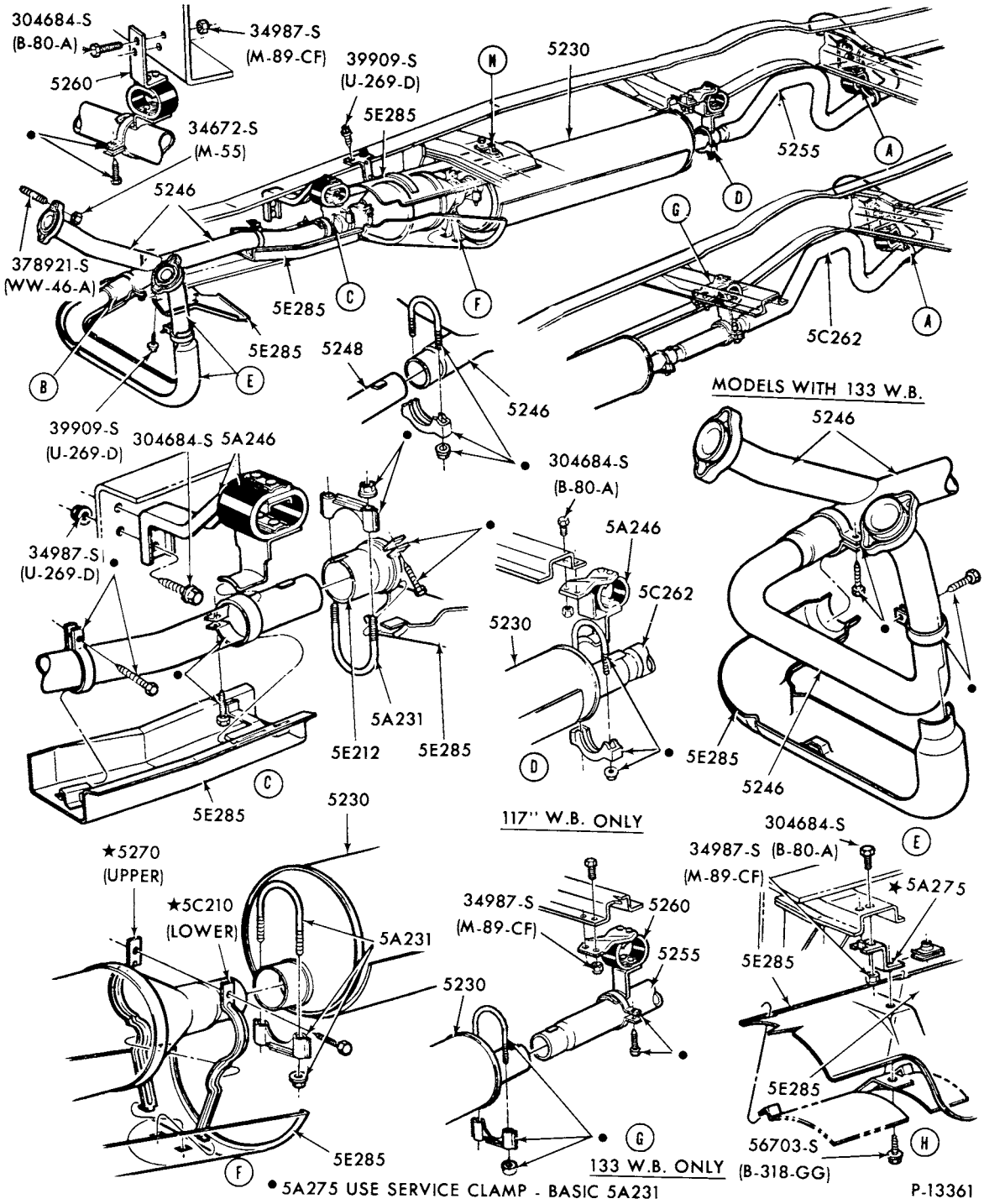

EXHAUST SYSTEM - w/ CONVERTER

1977/78 F150--4/W/D (REGULAR CAB)--8 CYL. 351M and 400

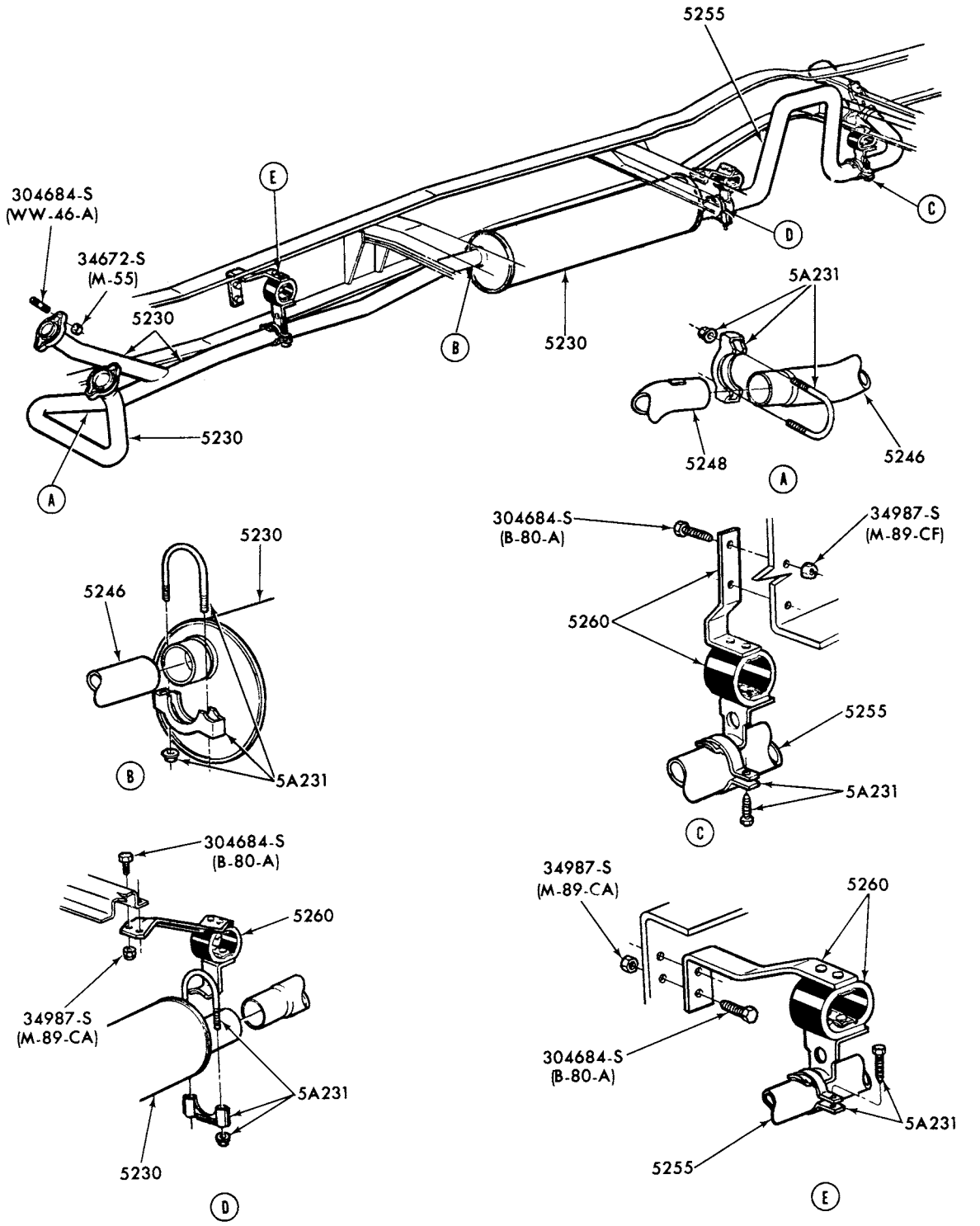

P-13362

EXHAUST SYSTEM

1977/78 F250--4/W/D (REGULAR CAB)-8 CYL. 351M and 400

COPYRIGHT © 1979 FORD MOTOR COMPANY—DEARBORN, MICHIGAN

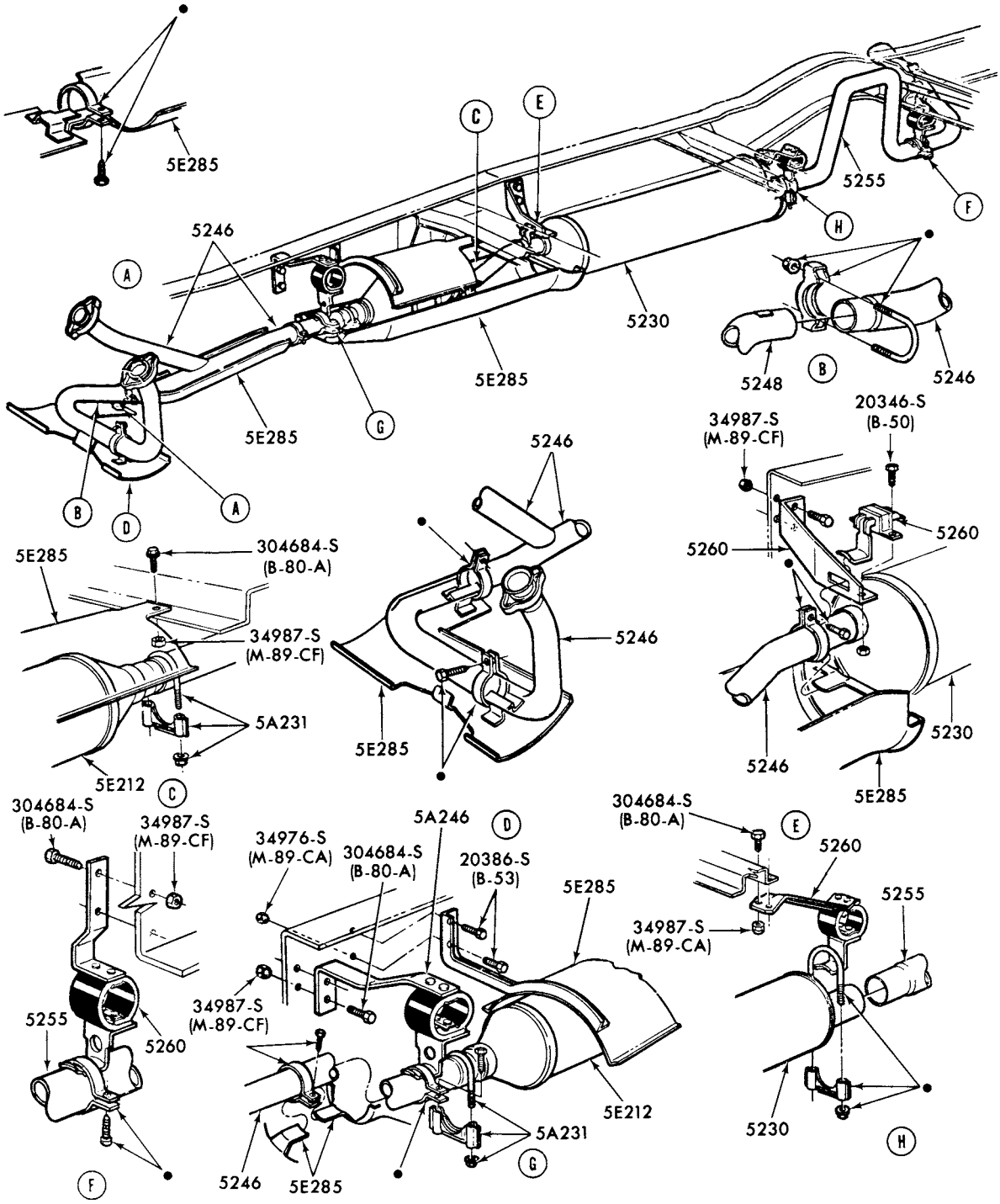

•USE SERVICE CLAMP-BASIC 5A231

P-13363

EXHAUST SYSTEM - w/ CONVERTER
1977/78 F250--4/W/D (REGULAR CAB)--8 CYL. 351M and 400

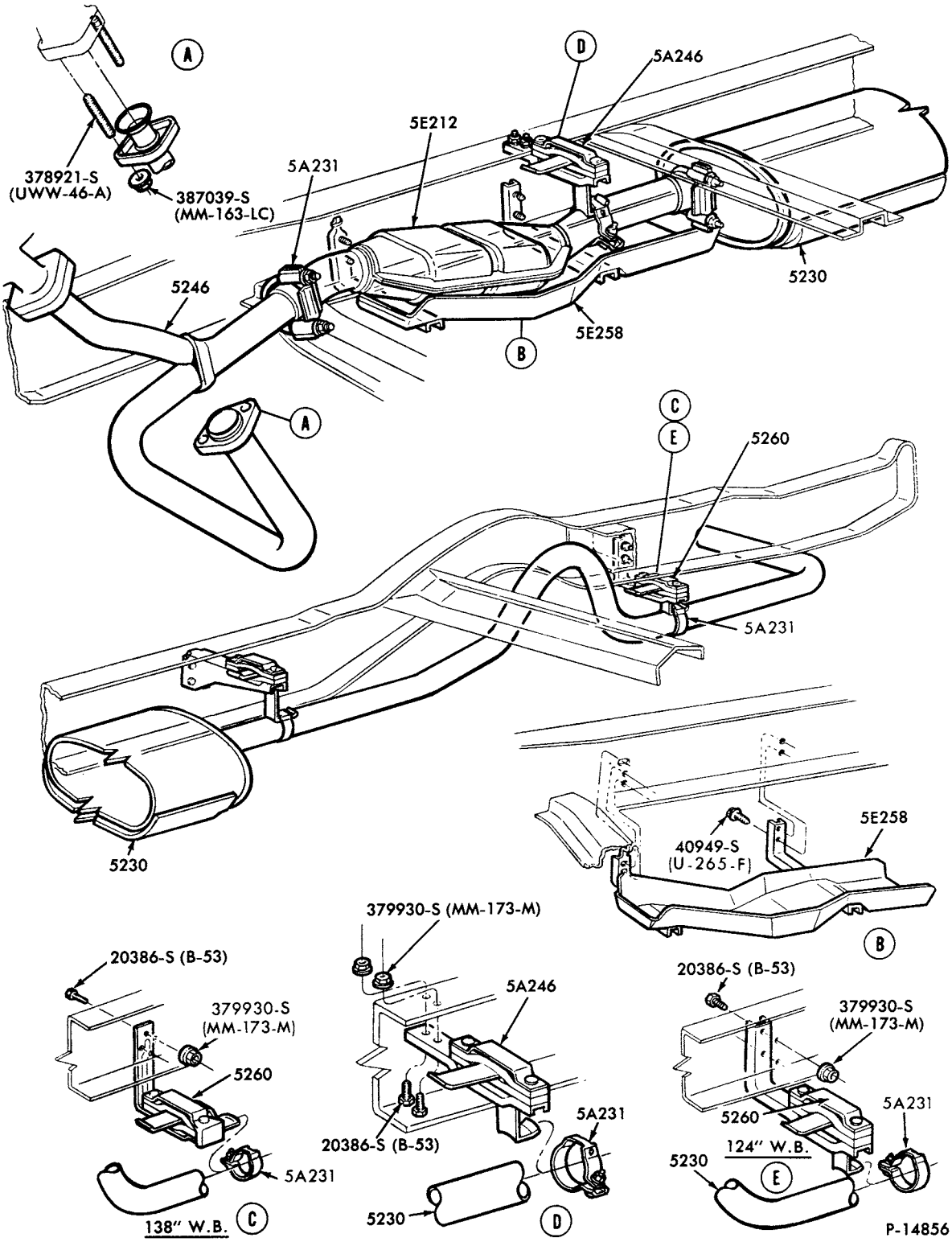

EXHAUST SYSTEM - w/CONVERTER
1979 E100/250--8 CYL. 302

COPYRIGHT © 1980 FORD MOTOR COMPANY - DEARBORN, MICHIGAN

1973/79 TRUCK SERIES 100/500

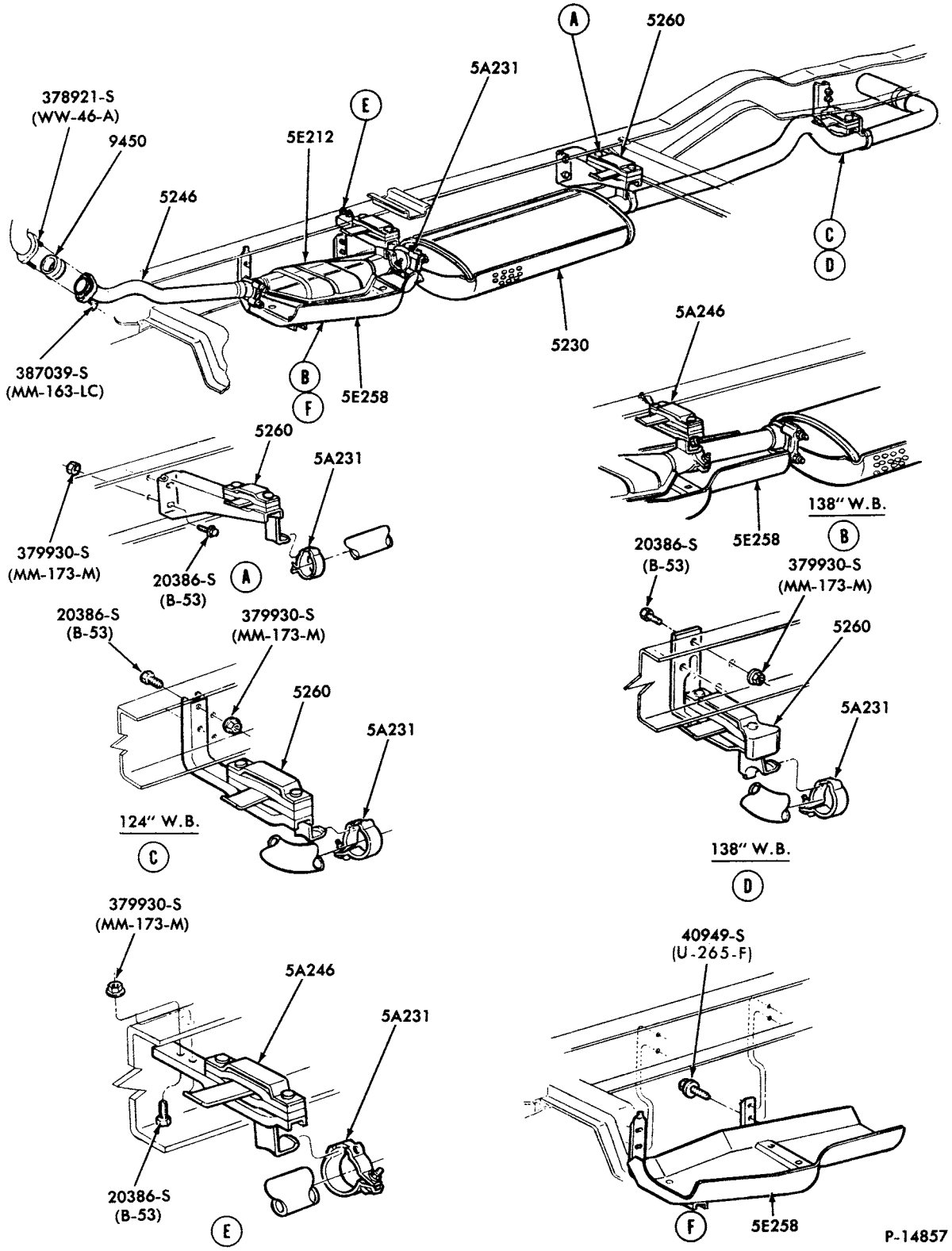

EXHAUST SYSTEM - w/CONVERTER
1979 E100/350--6 CYL. 300

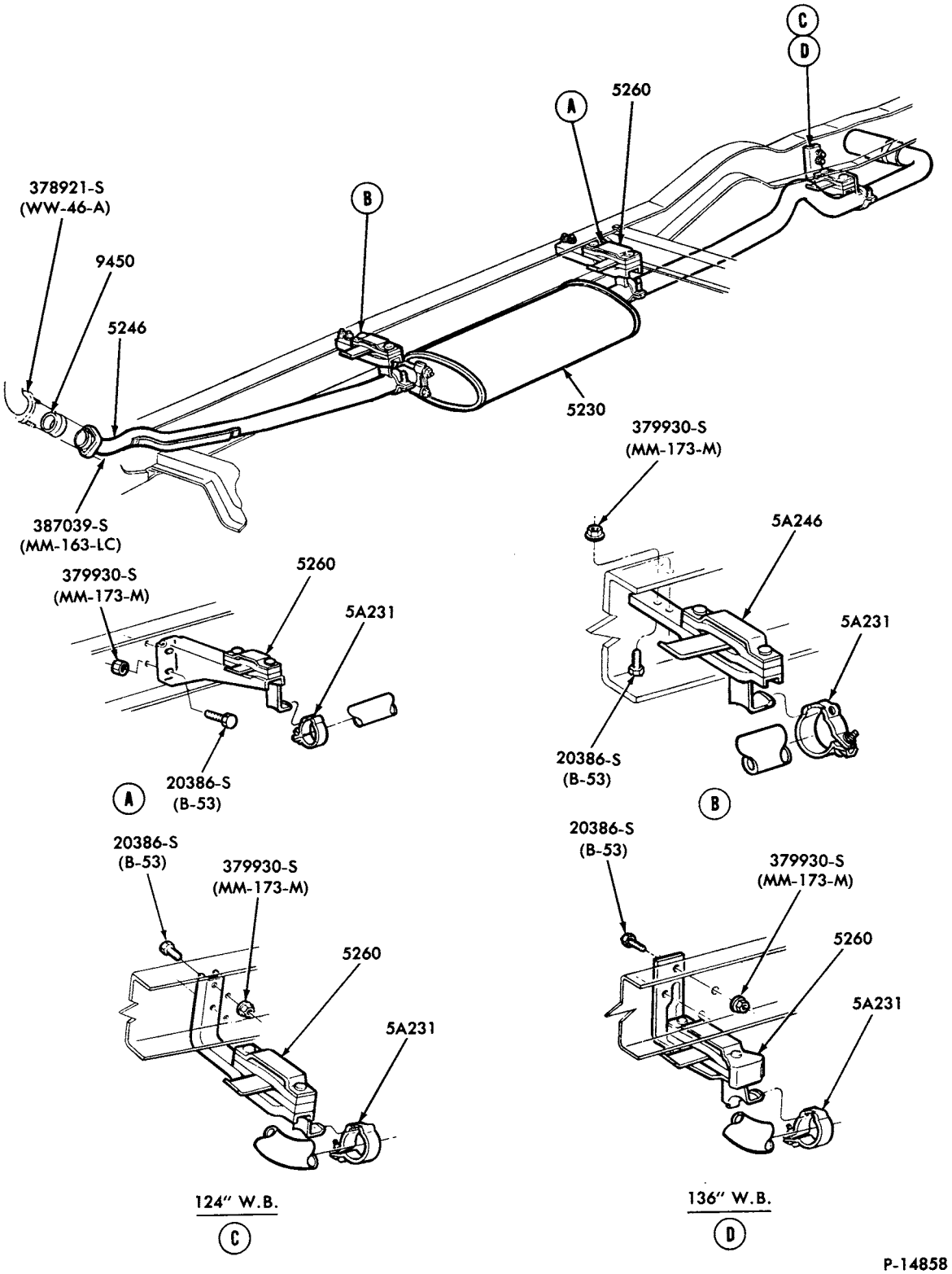

P-14858

EXHAUST SYSTEM - w/o CONVERTER
1979 E350--6 CYL. 300

COPYRIGHT © 1980— FORD MOTOR COMPANY —DEARBORN, MICHIGAN

1973/79 TRUCK SERIES 100/500

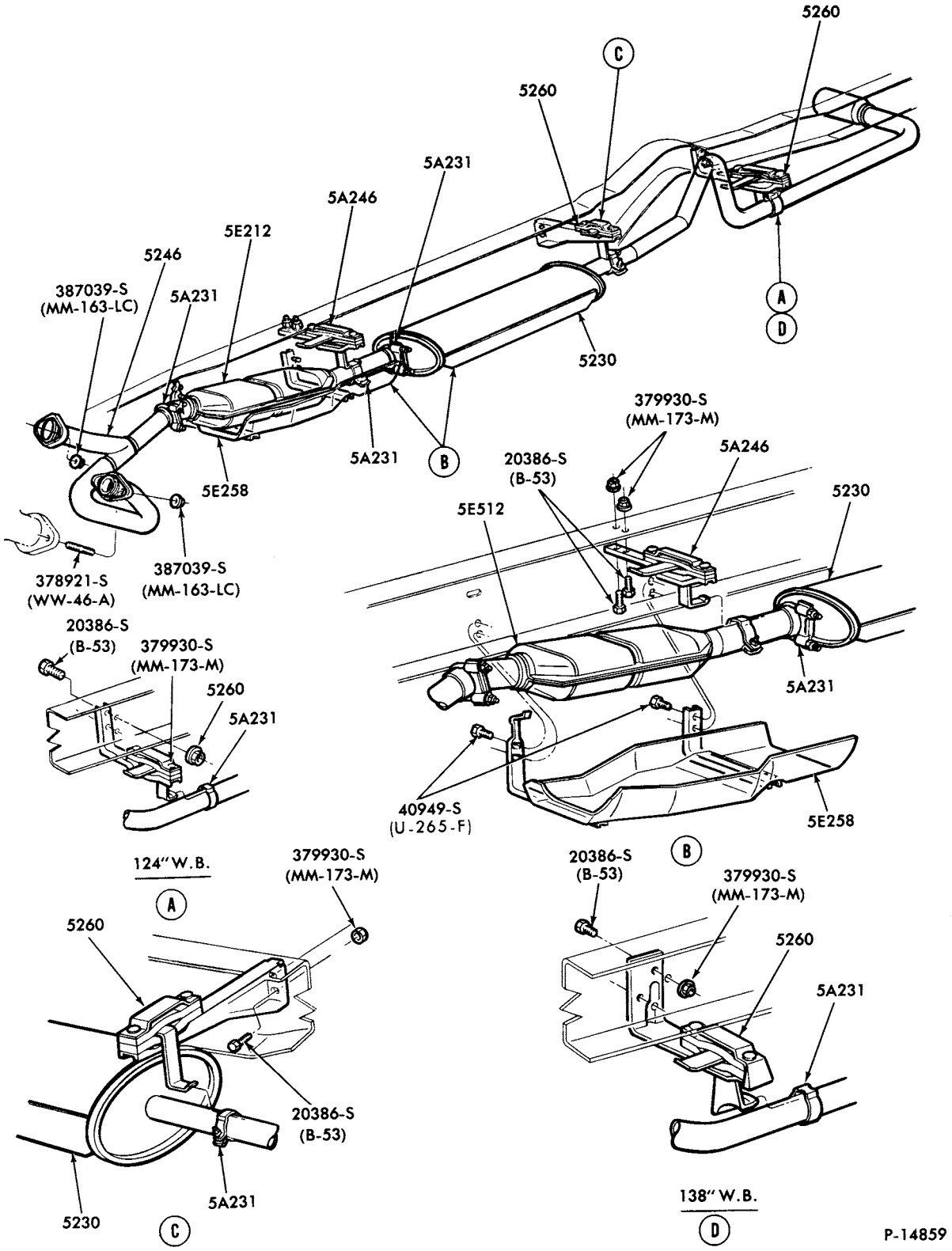

EXHAUST SYSTEM - w/CONVERTER
1979 E100/350--8 CYL. 351W

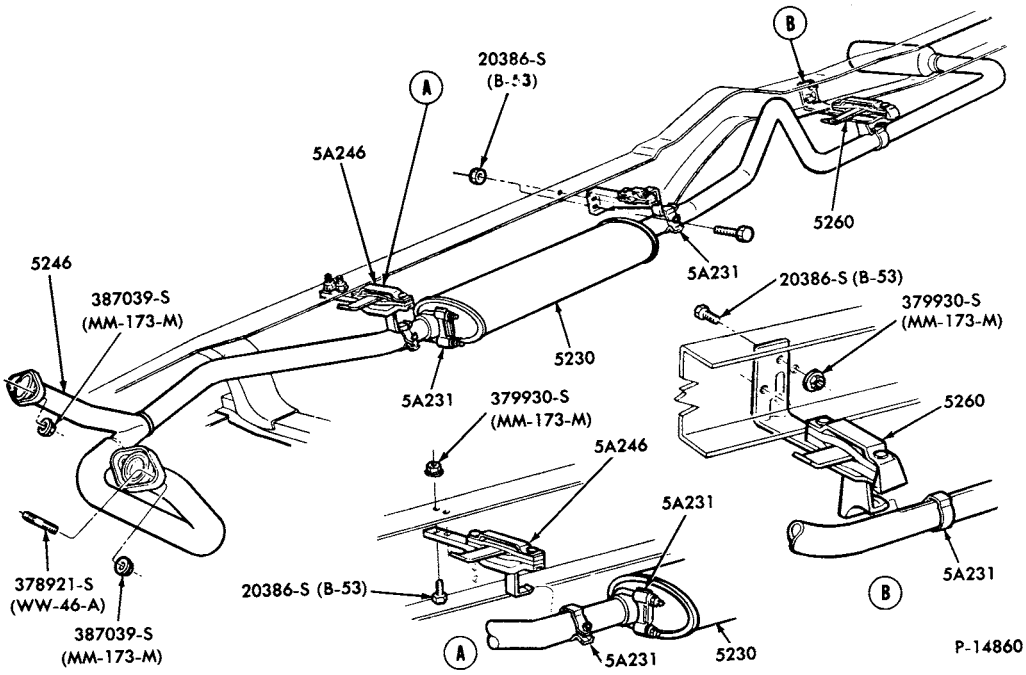

EXHAUST SYSTEM - w/o CONVERTER
1979 E350--8 CYL. 460

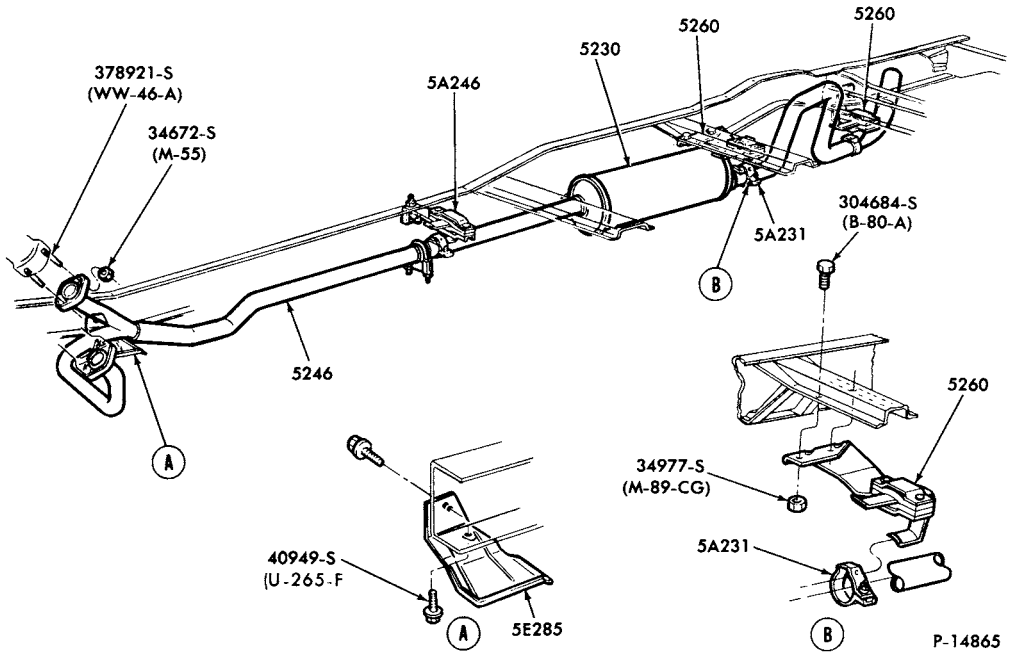

EXHAUST SYSTEM - w/o CONVERTER
1979 F100/350--2/W/D (SUPER CAB)-8 CYL. 351M and 400

COPYRIGHT © 1980 FORD MOTOR COMPANY DEARBORN, MICHIGAN

1973/79 TRUCK SERIES 100/500

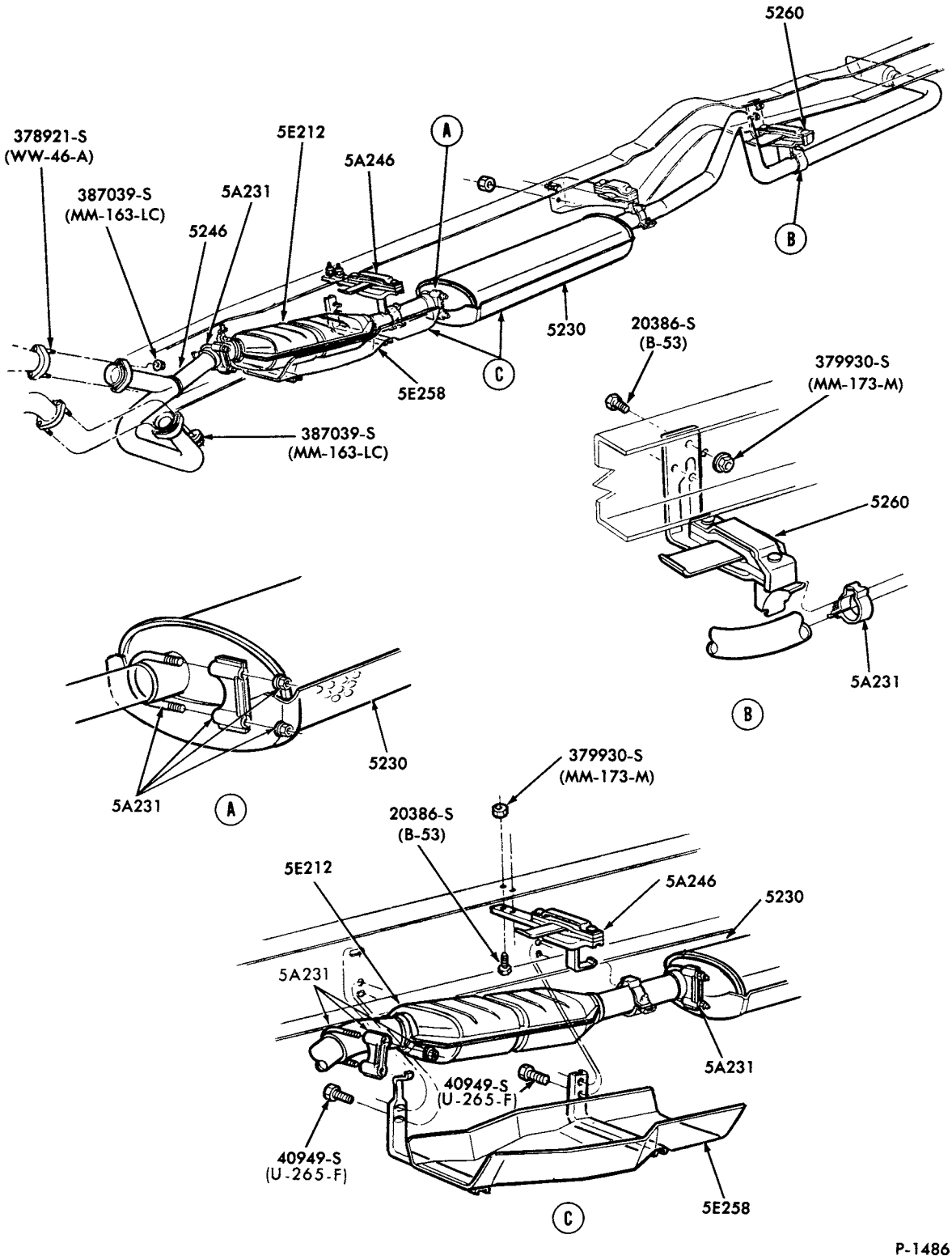

EXHAUST SYSTEM - w/CONVERTER
1979 E250--8 CYL. 460

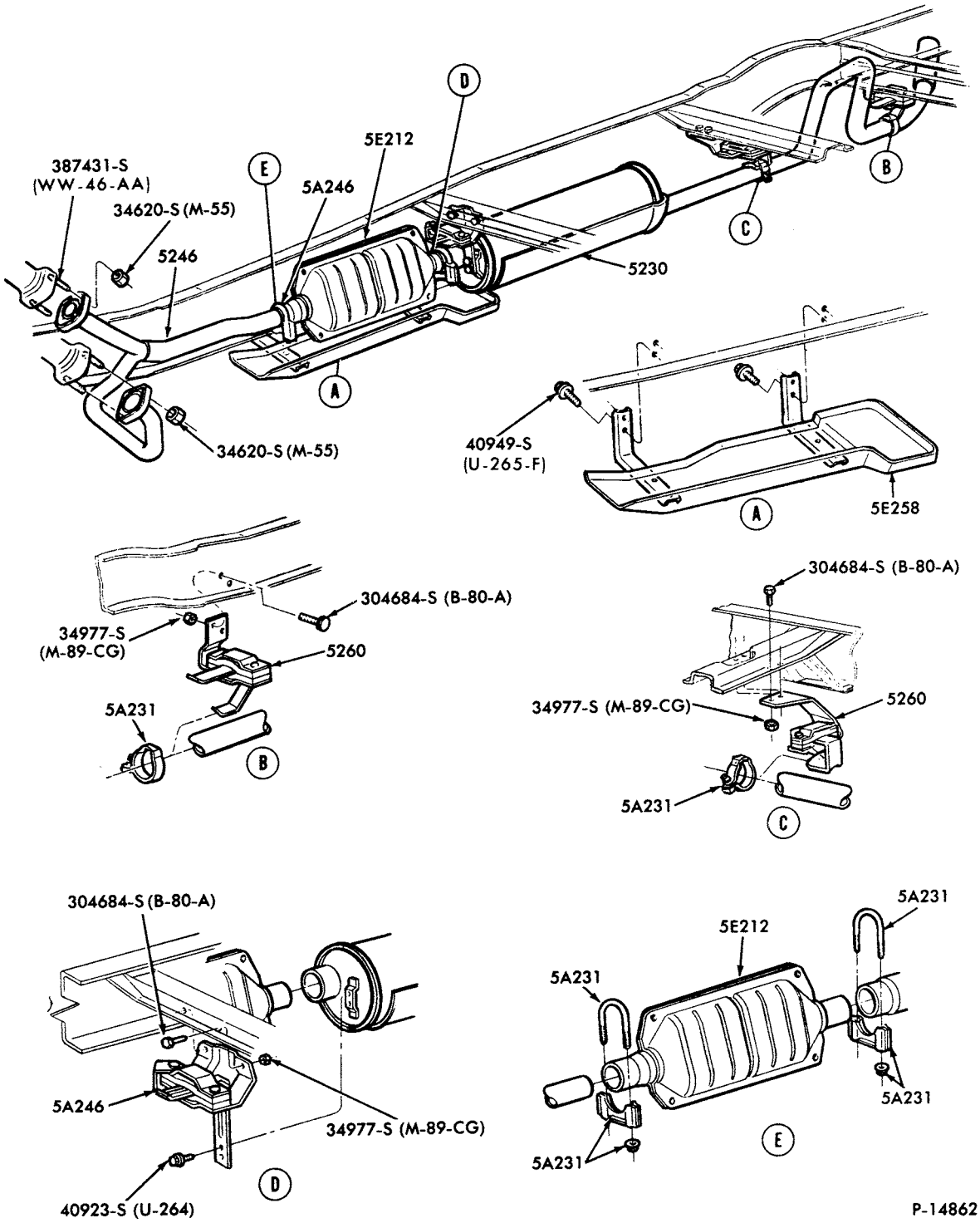

EXHAUST SYSTEM - w/CONVERTER

1979 F100/250--2/W/D (REGULAR CAB)-8 CYL. 351M and 400

COPYRIGHT © 1980 FORD MOTOR COMPANY - DEARBORN, MICHIGAN

1973/79 TRUCK SERIES 100/500

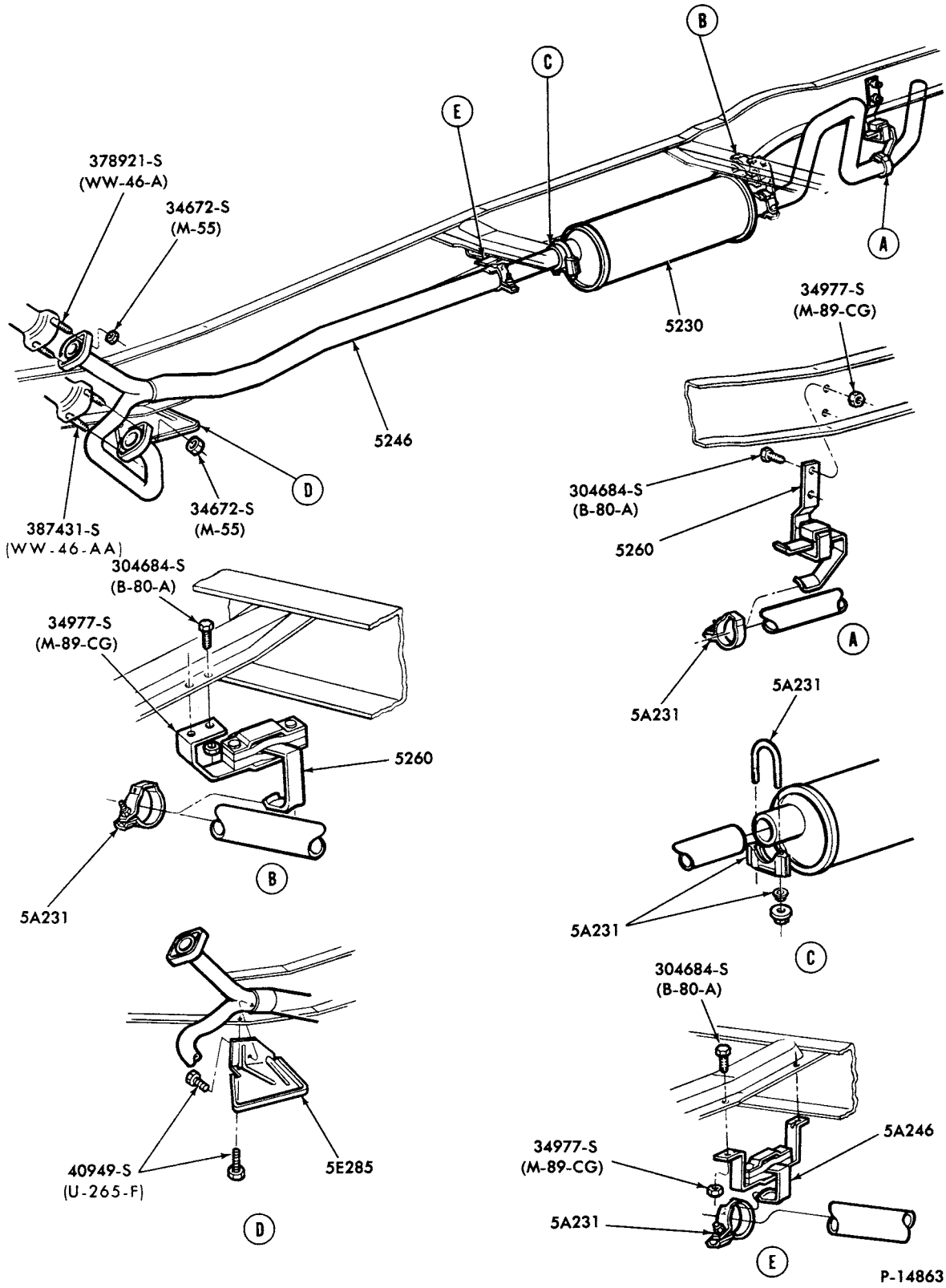

EXHAUST SYSTEM - w/o CONVERTER

1979 F350--2/W/D (REGULAR CAB)-8 CYL. 351M and 400

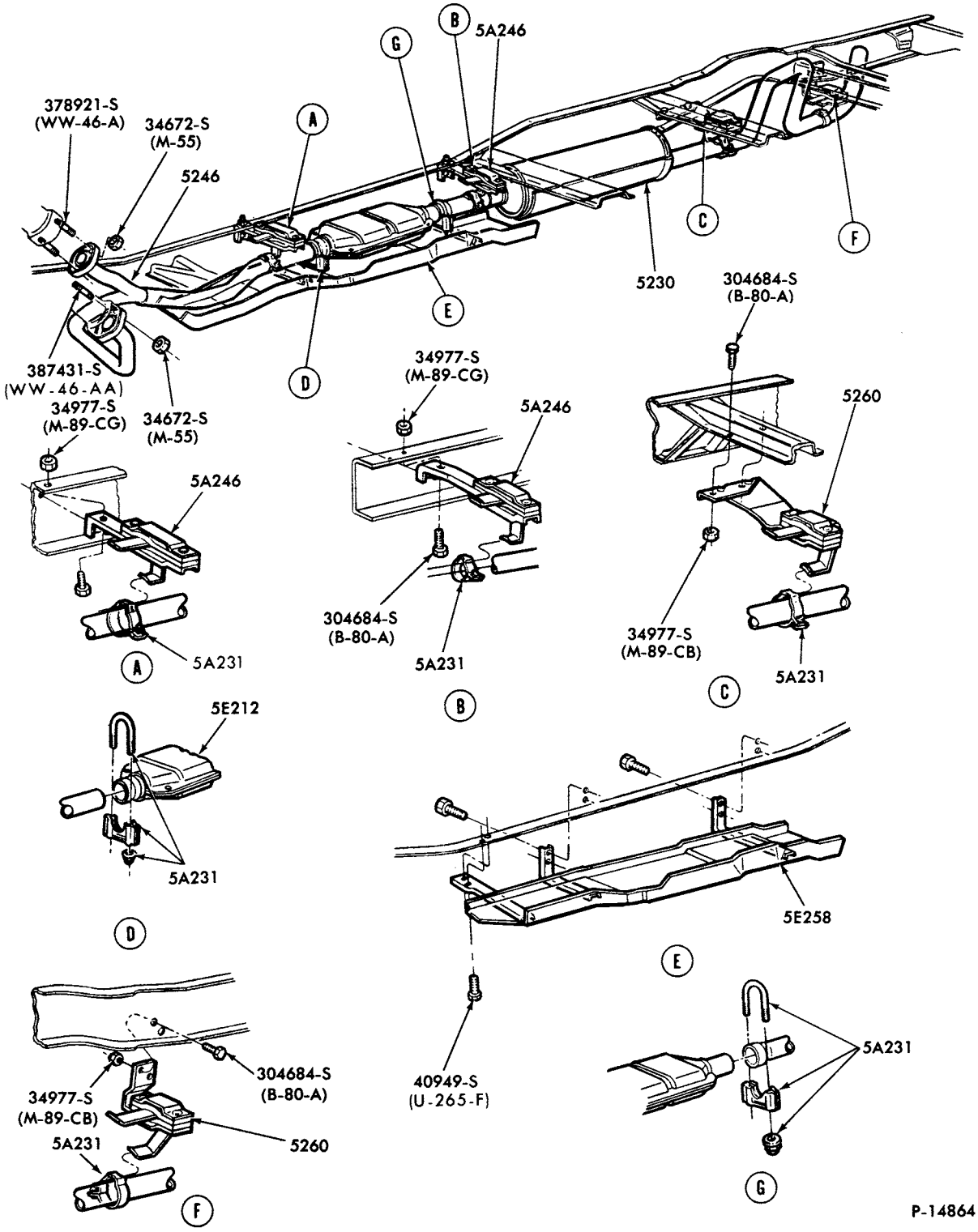

EXHAUST SYSTEM - w/CONVERTER

1979 F100/350--2/W/D (SUPER CAB)-8 CYL. 351M and 400

COPYRIGHT © 1980 FORD MOTOR COMPANY, DEARBORN, MICHIGAN

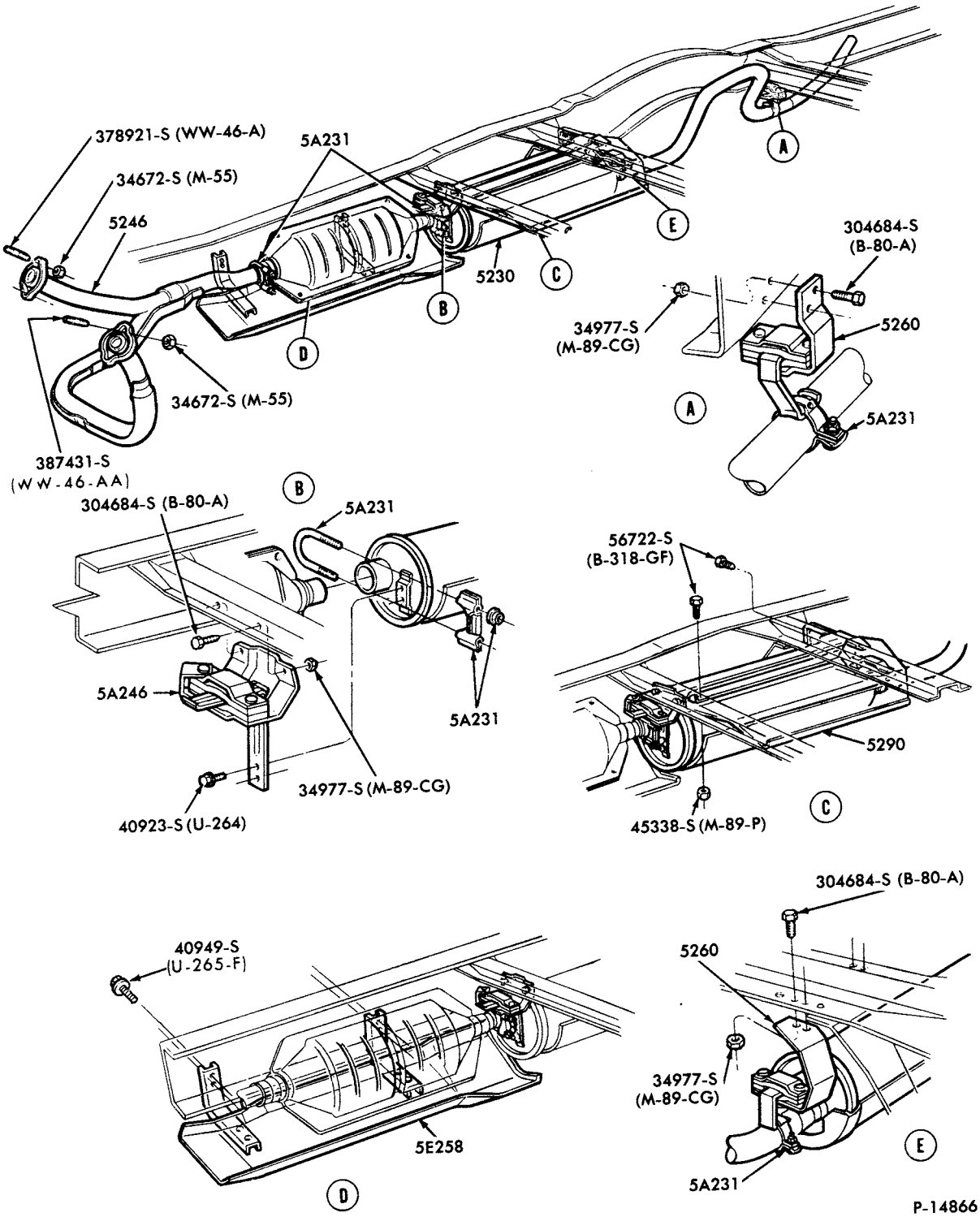

EXHAUST SYSTEM - w/CONVERTER

1979 F150/250--4/W/D (REGULAR CAB)-8 CYL. 351M and 400

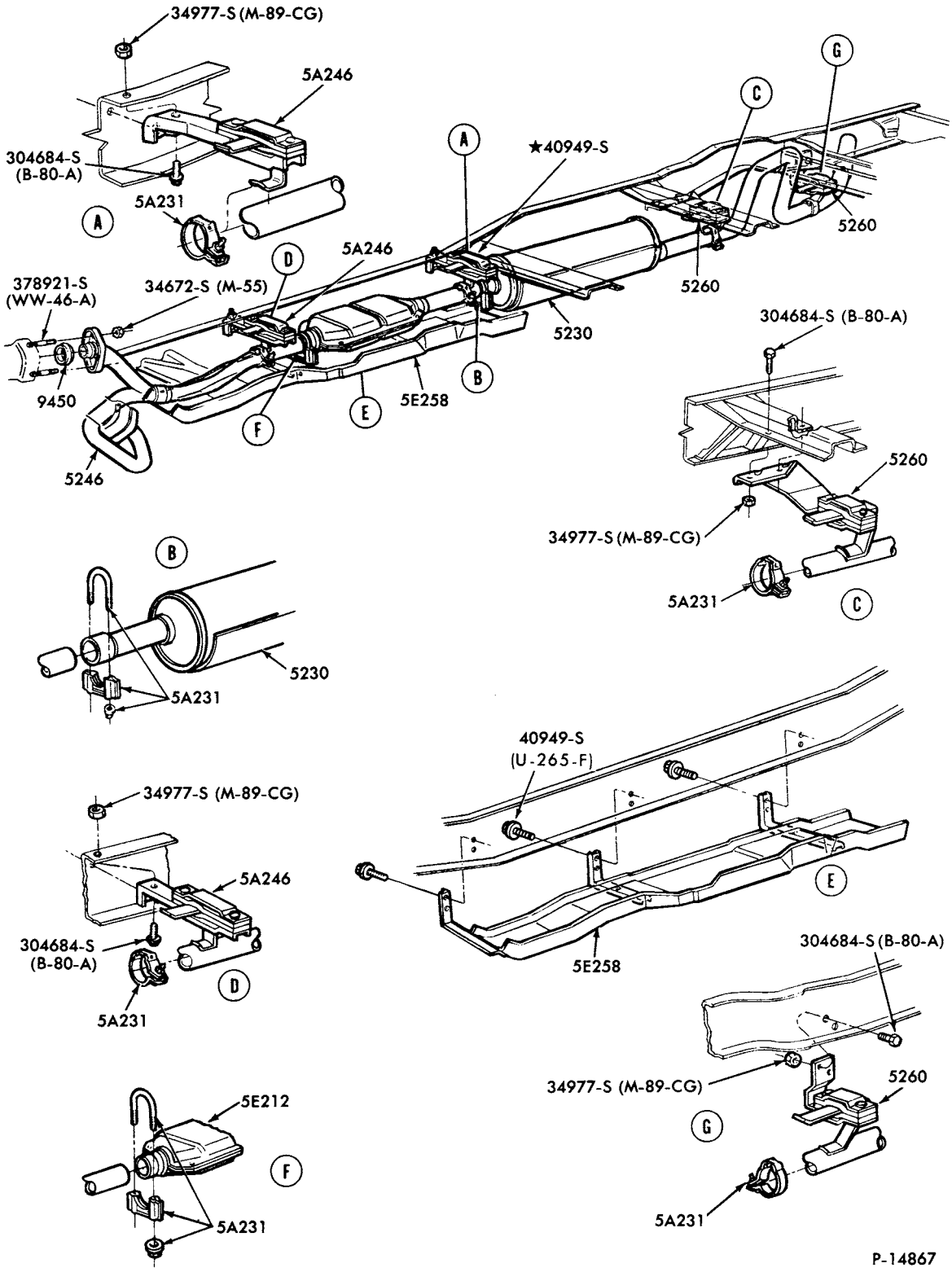

EXHAUST SYSTEM - w/CONVERTER

1979 F150--2/W/D (SUPER CAB)-8 CYL. 302

COPYRIGHT © 1980 FORD MOTOR COMPANY, DEARBORN, MICHIGAN

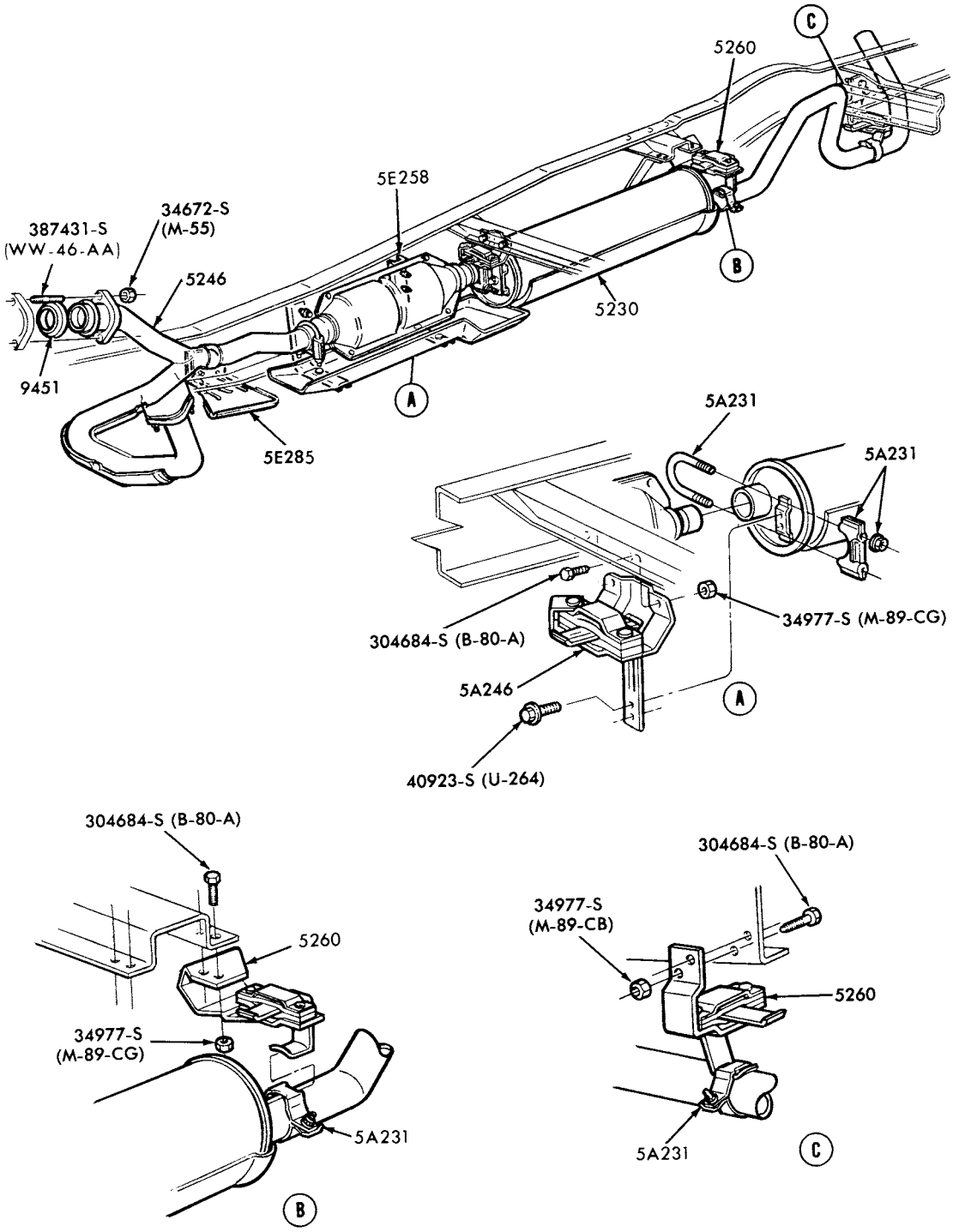

P-14868

EXHAUST SYSTEM - w/CONVERTER
1979 F100/150--2/W/D (REGULAR CAB)-8 CYL. 302

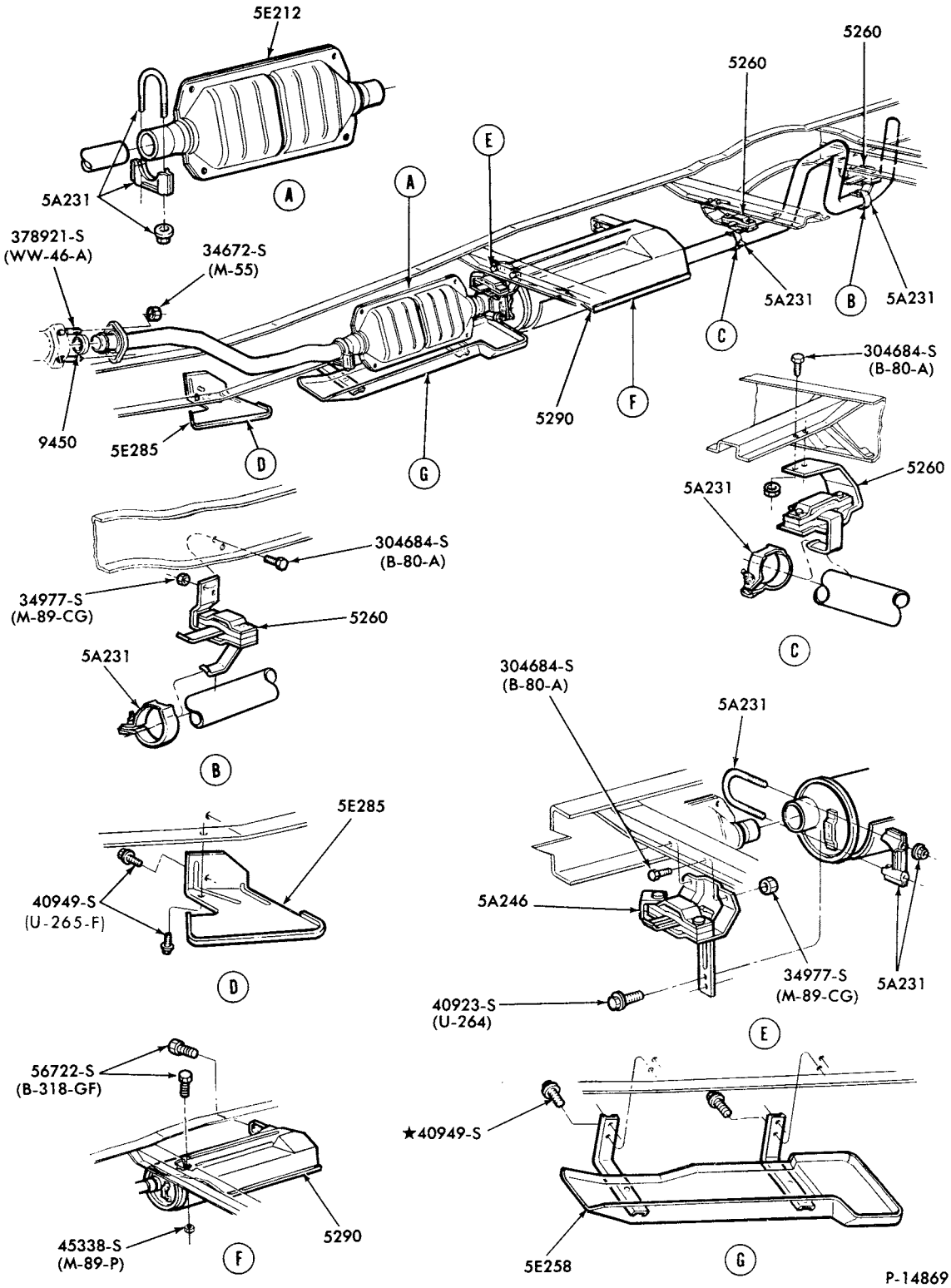

EXHAUST SYSTEM - w/CONVERTER

1979 F100/250--2/W/D (REGULAR CAB)-6 CYL. 300

1979 F150/250--4/W/D (REGULAR CAB)-6 CYL. 300

COPYRIGHT © 1980 FORD MOTOR COMPANY DEARBORN, MICHIGAN

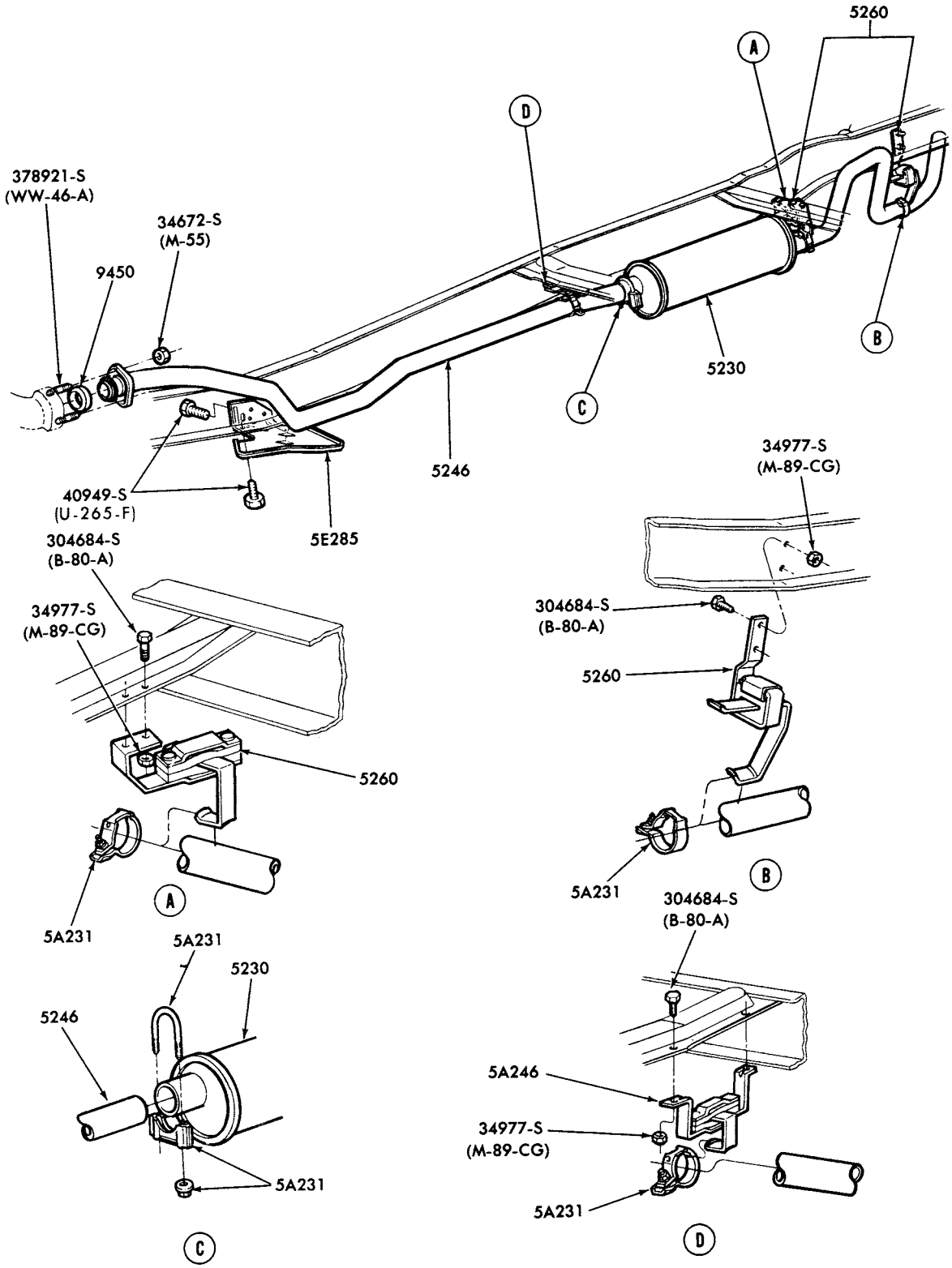

P-14870

EXHAUST SYSTEM - w/o CONVERTER
1979 F350--2/W/D (REGULAR CAB)-6 CYL. 300

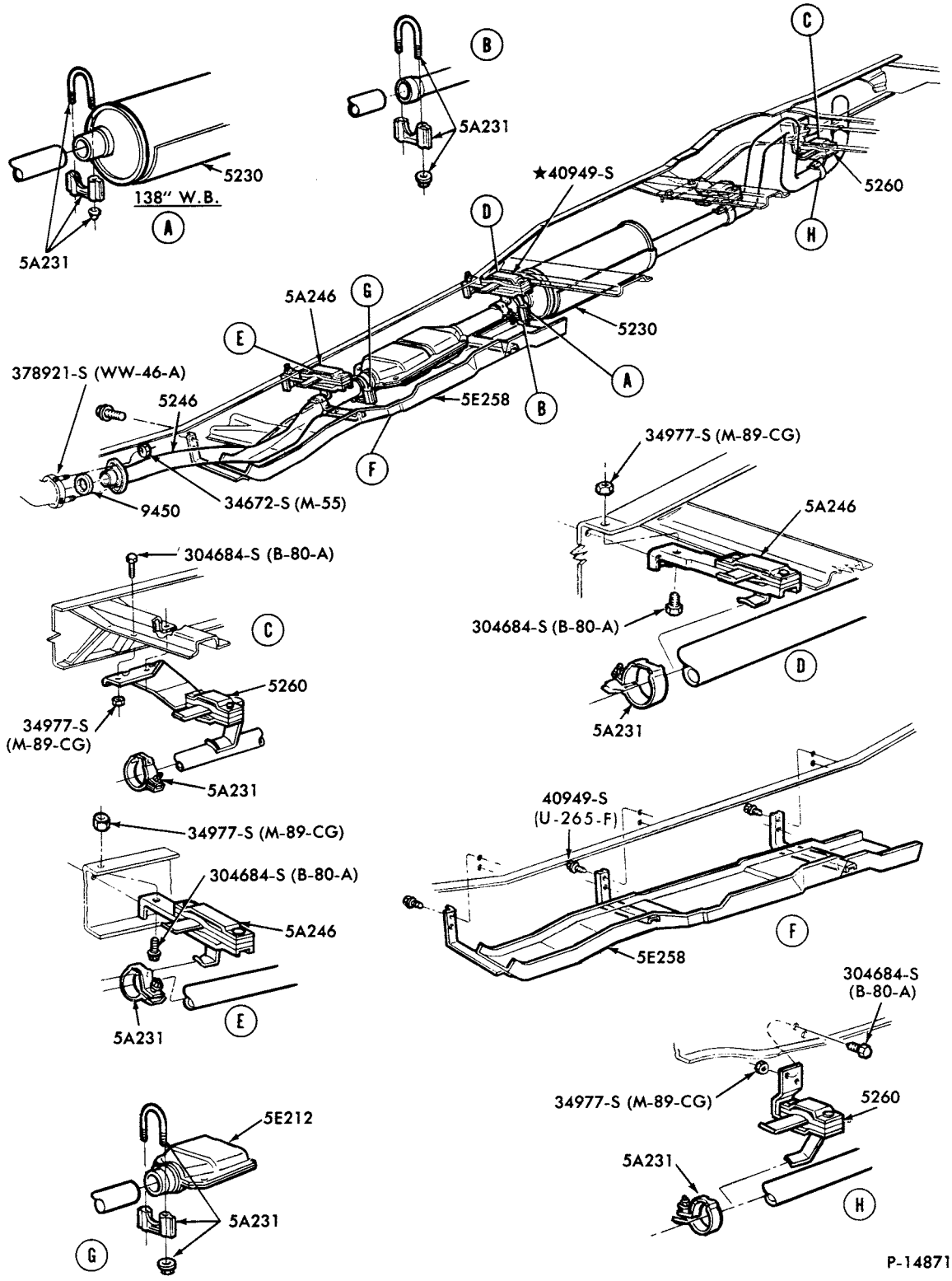

EXHAUST SYSTEM - w/CONVERTER

1979 F100/250--2/W/D (SUPER CAB)-6 CYL. 300

COPYRIGHT © 1980 FORD MOTOR COMPANY, DEARBORN, MICHIGAN

1973/79 TRUCK SERIES 100/500

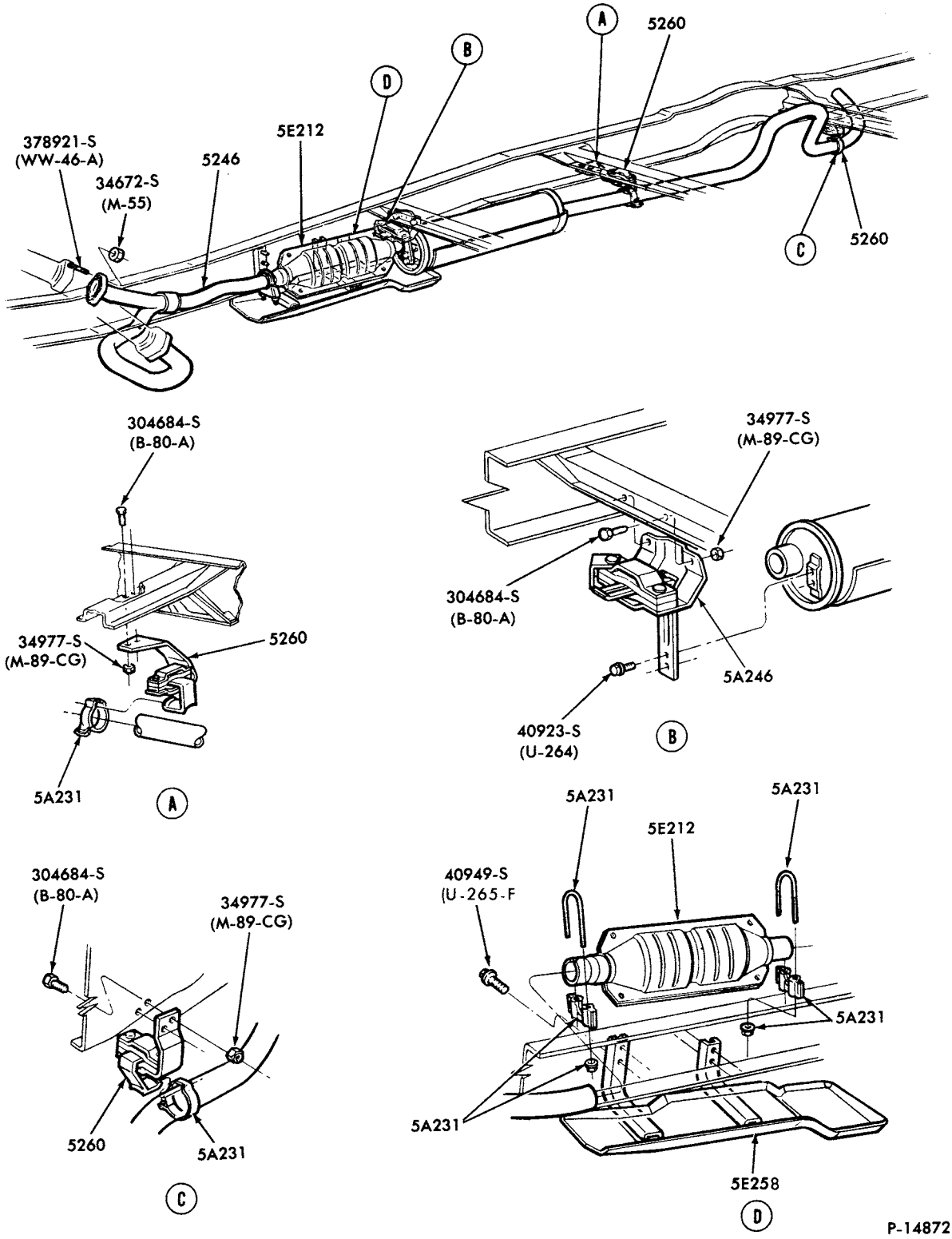

EXHAUST SYSTEM - w/CONVERTER

1979 F150/250--2/W/D (REGULAR CAB)-8 CYL. 460

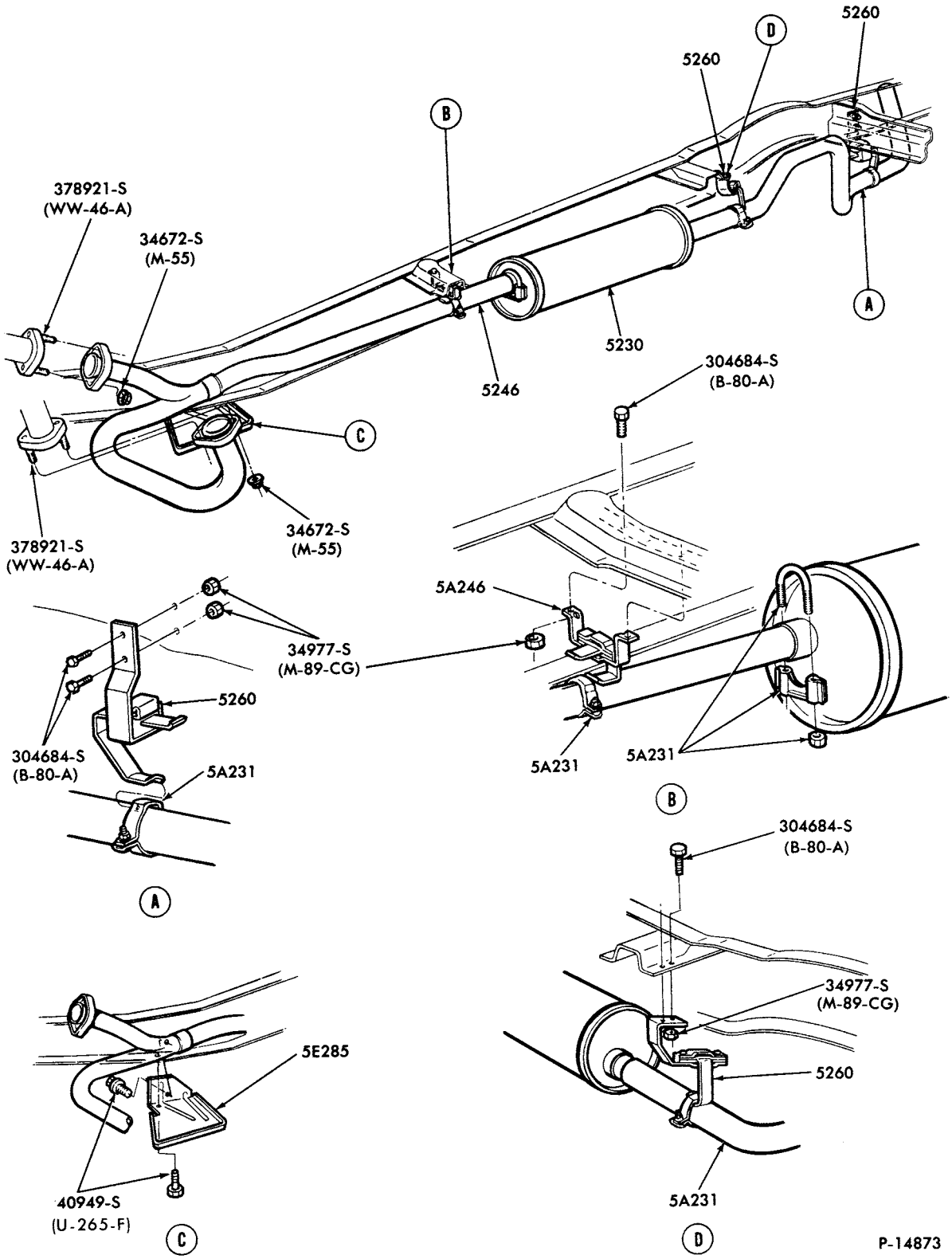

EXHAUST SYSTEM - w/o CONVERTER
1979 F350--2/W/D (REGULAR CAB)--8 CYL. 460

COPYRIGHT © 1980 FORD MOTOR COMPANY, DEARBORN, MICHIGAN

1973/79 TRUCK SERIES 100/500

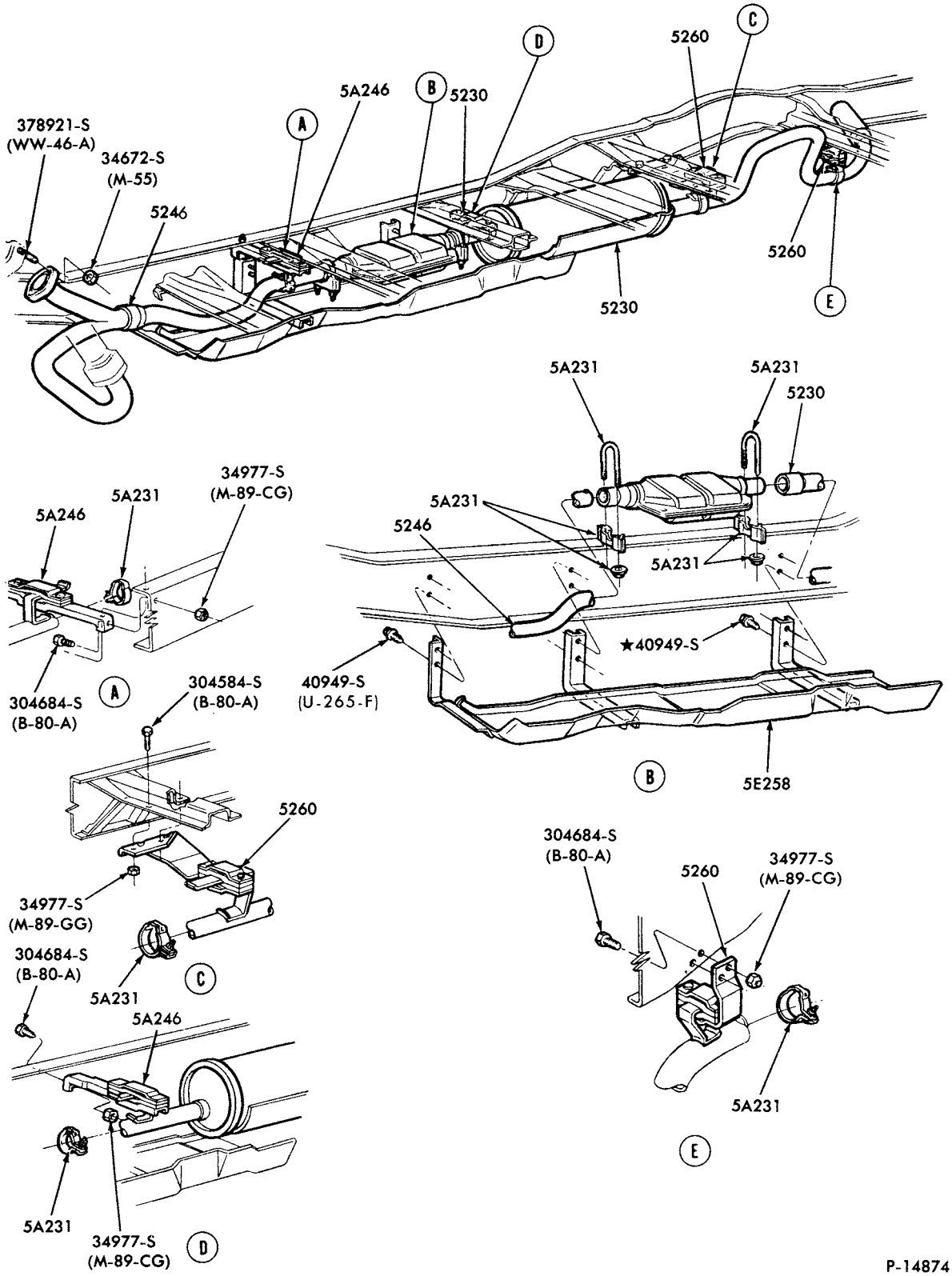

EXHAUST SYSTEM - w/CONVERTER

1979 F150/250--2/W/D (SUPER CAB)-8 CYL. 460

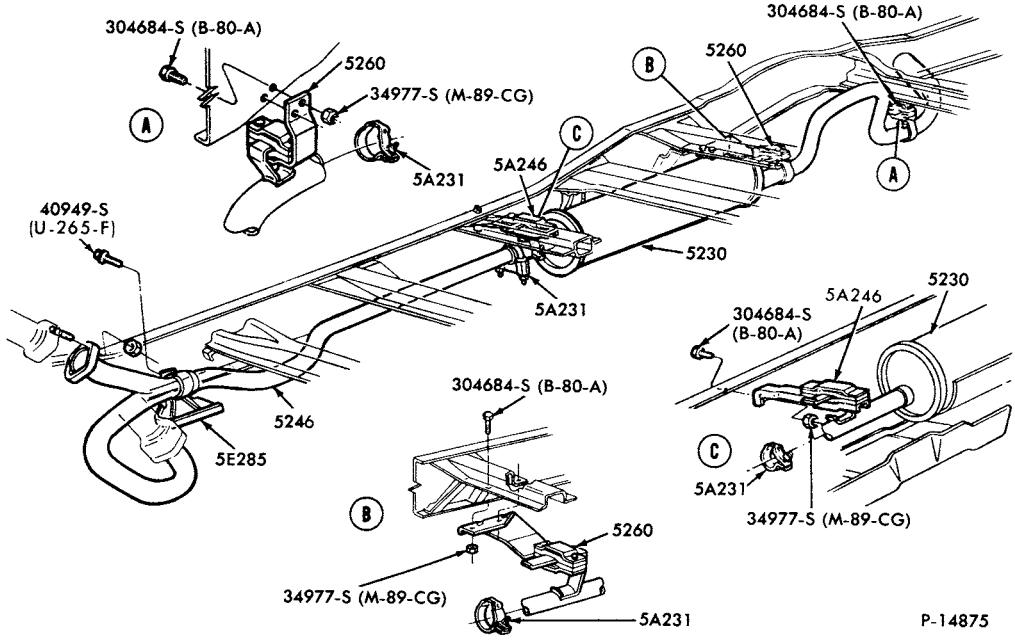

EXHAUST SYSTEM - w/o CONVERTER
1979 F350--2/W/D (SUPER CAB)-8 CYL. 460

COPYRIGHT © 1980 FORD MOTOR COMPANY DEARBORN, MICHIGAN

1973/79 TRUCK SERIES 100/500

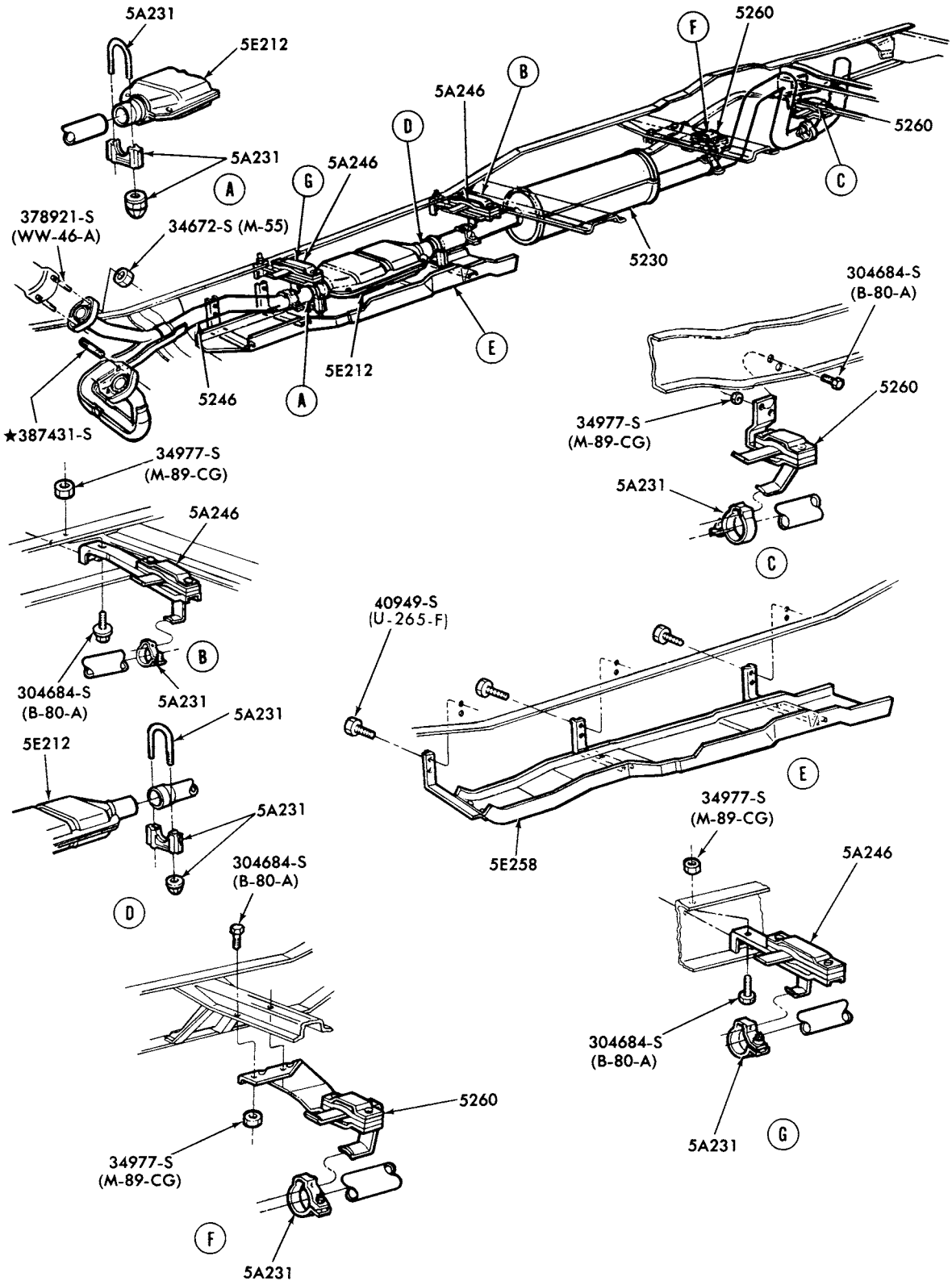

EXHAUST SYSTEM - w/CONVERTER

1979 F150/250--4/W/D (SUPER CAB)-8 CYL. 351M and 400

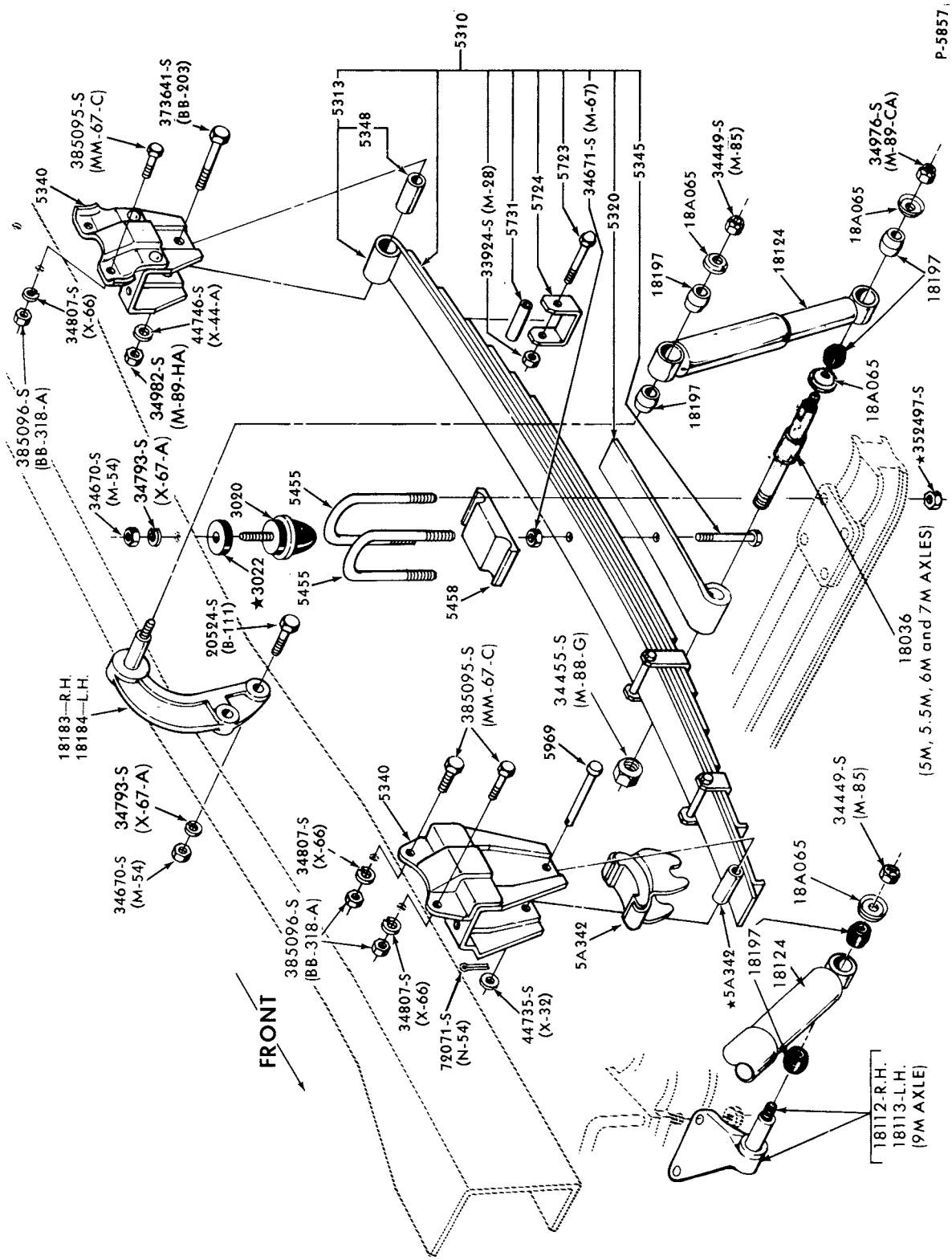

FRONT SUSPENSION
1973/77 B-F500

COPYRIGHT © 1980 - FORD MOTOR COMPANY - DEARBORN, MICHIGAN

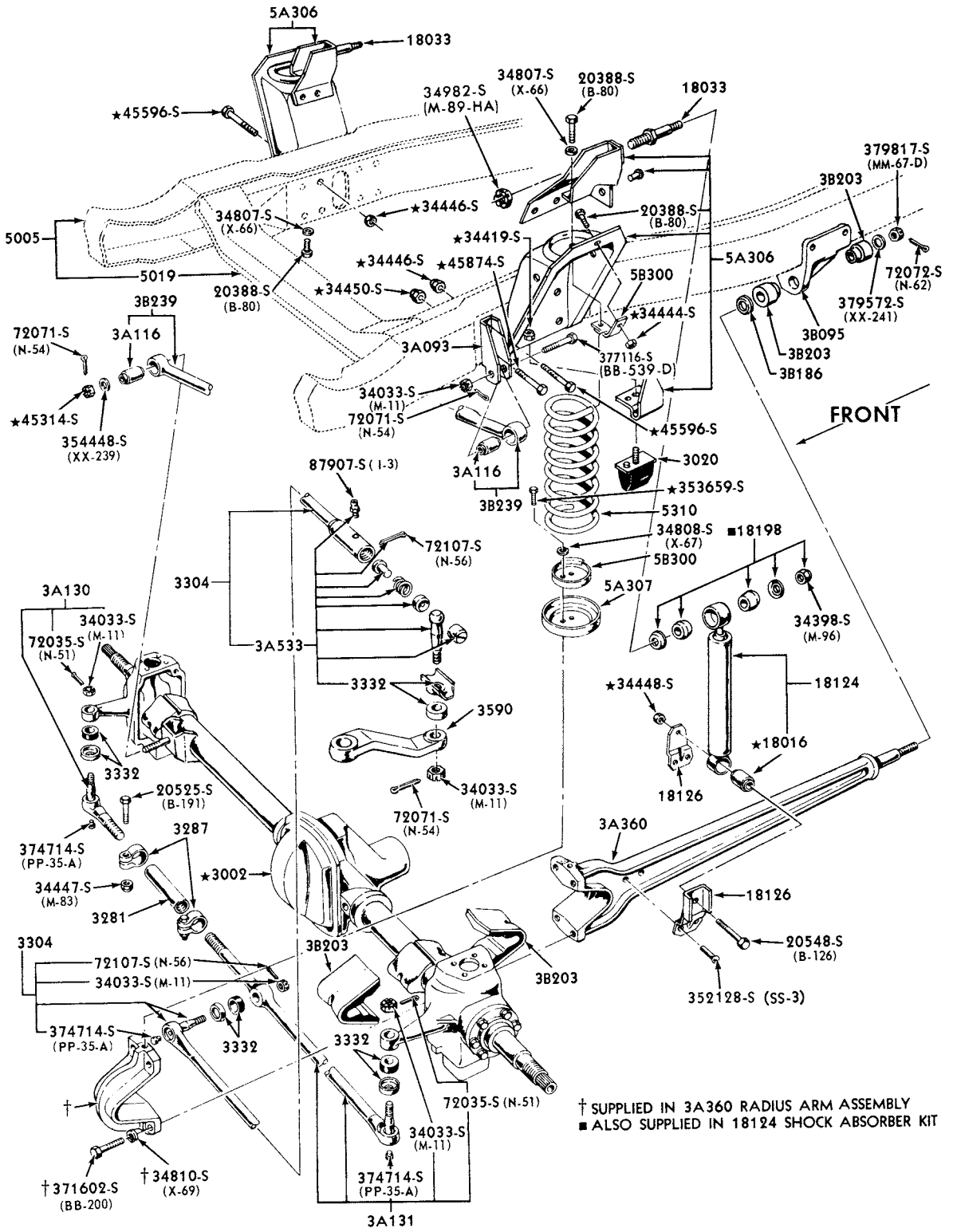

FRONT SUSPENSION and STEERING LINKAGE
1973/75 F100--4/W/D

P-11306

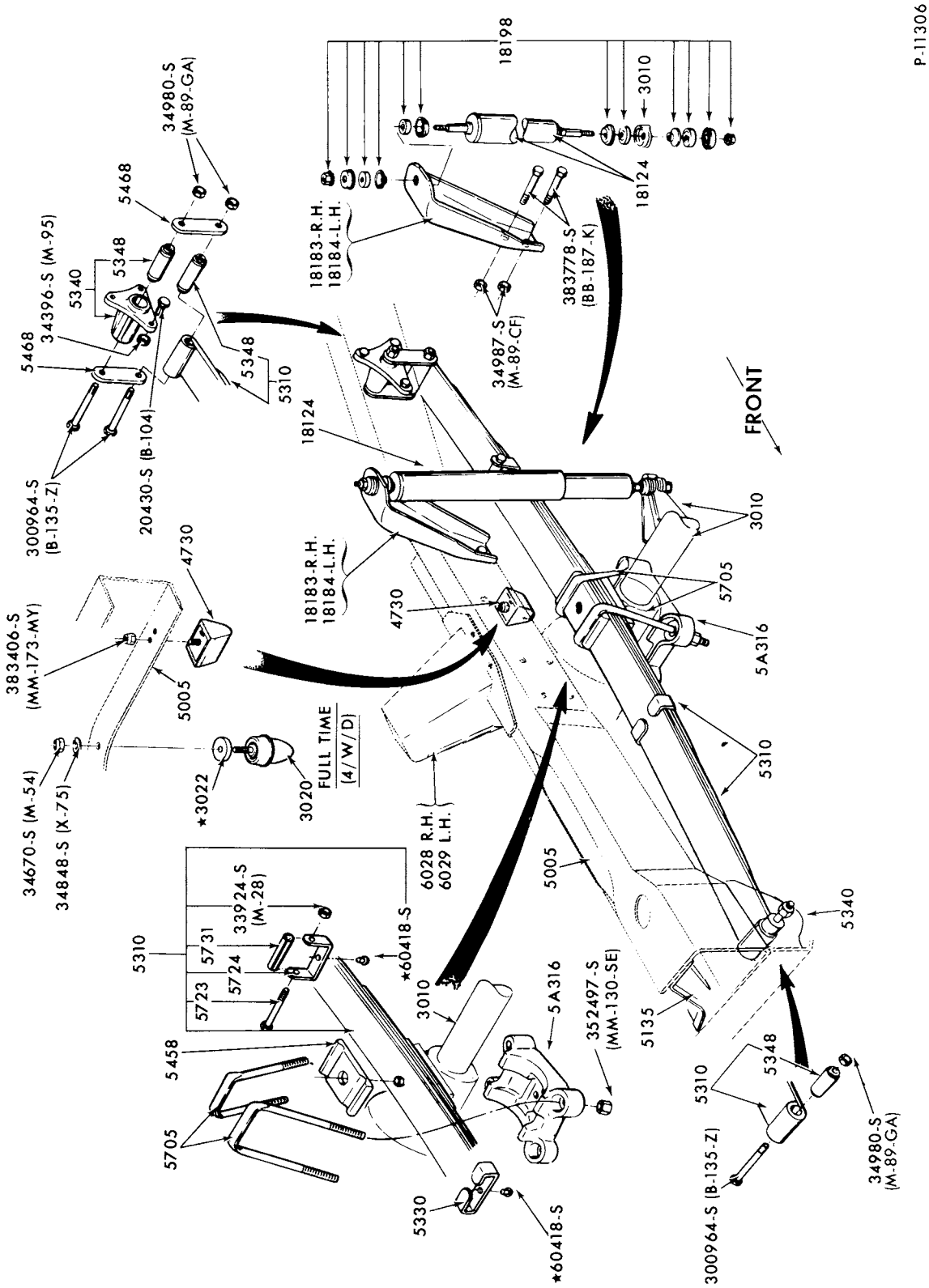

FRONT SUSPENSION

1973/77 F250--4/W/D - "BEFORE SER. Y20,001"

COPYRIGHT © 1979 -FORD MOTOR -DEARBORN, MICHIGAN
COMPANY

1973/79 TRUCK SERIES 100/500

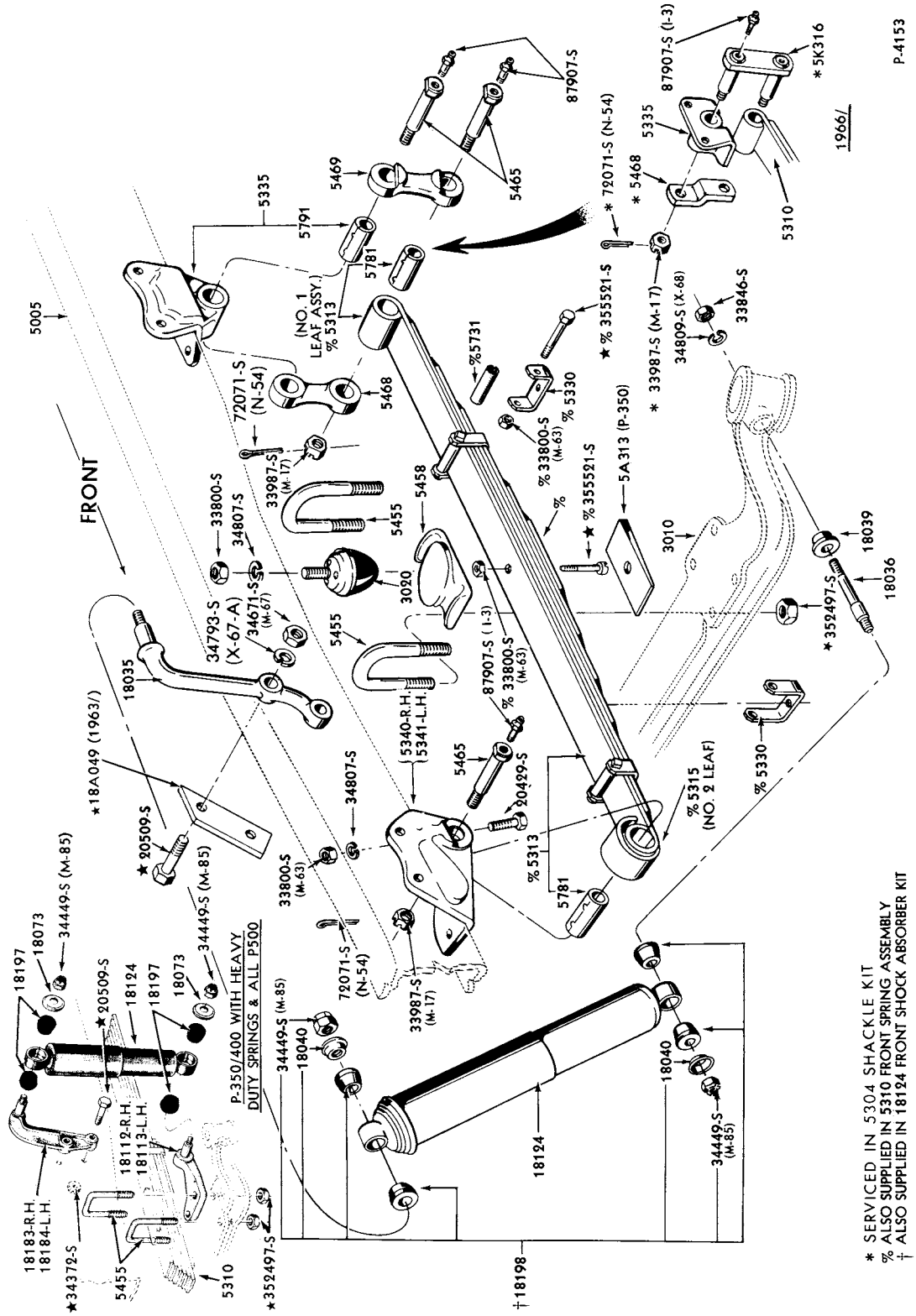

FRONT SUSPENSION
1973/77 P350/500

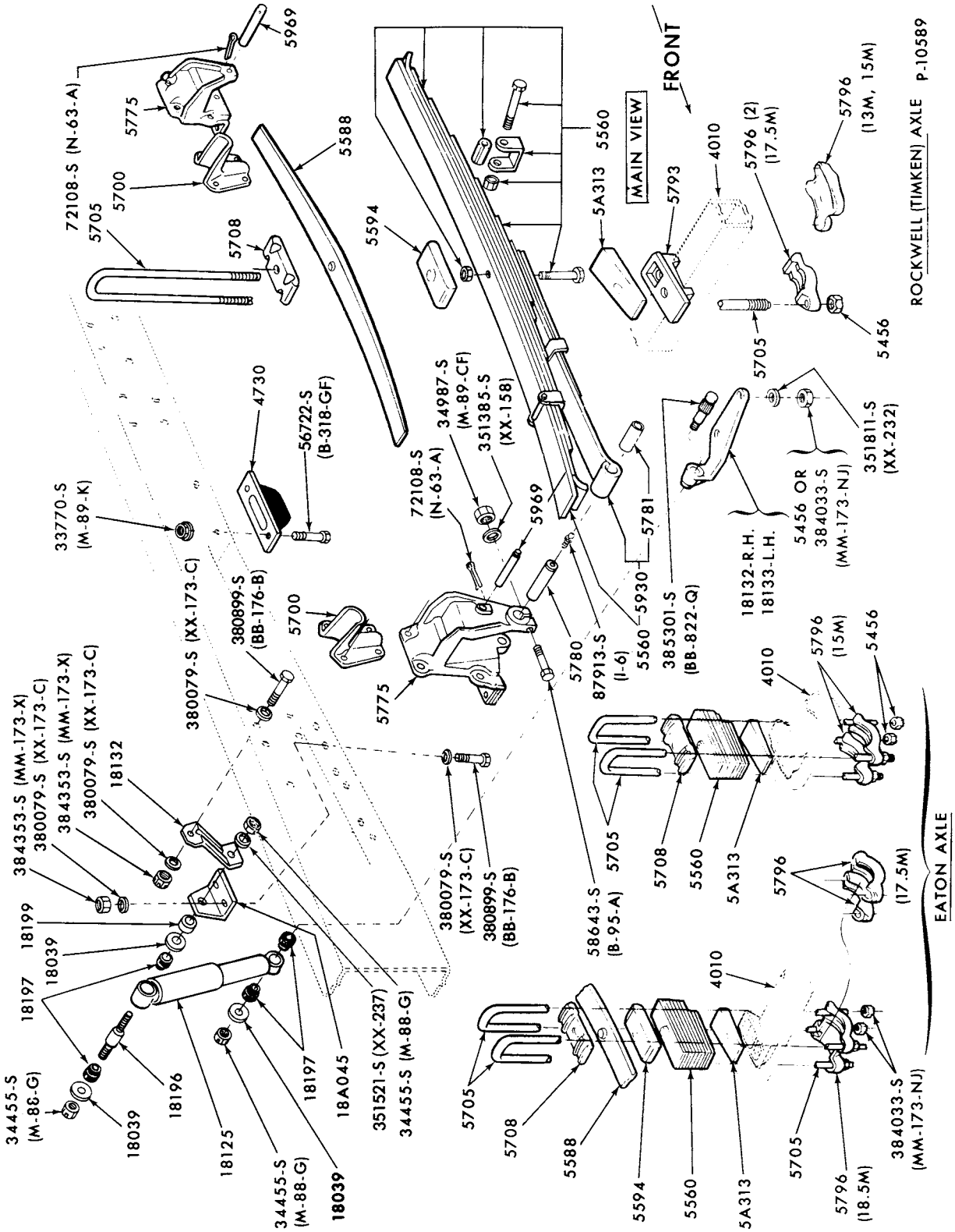

REAR SUSPENSION
1973/77 B-F500

COPYRIGHT © 1979 -FORD MOTOR-DEARBORN, MICHIGAN COMPANY

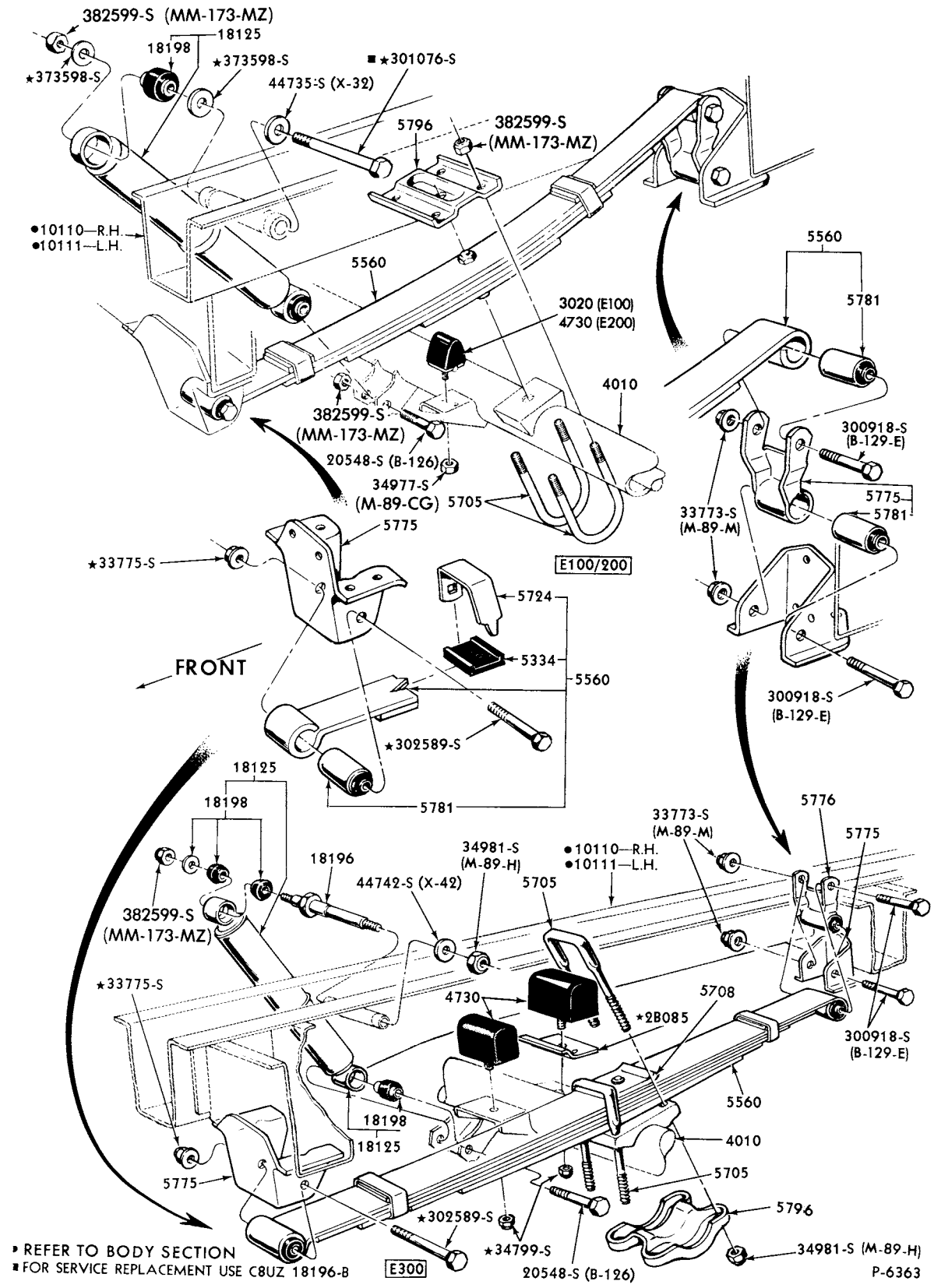

• REFER TO BODY SECTION
■ FOR SERVICE REPLACEMENT USE C8UZ 18196-B

REAR SUSPENSION
1973/74 E100/300

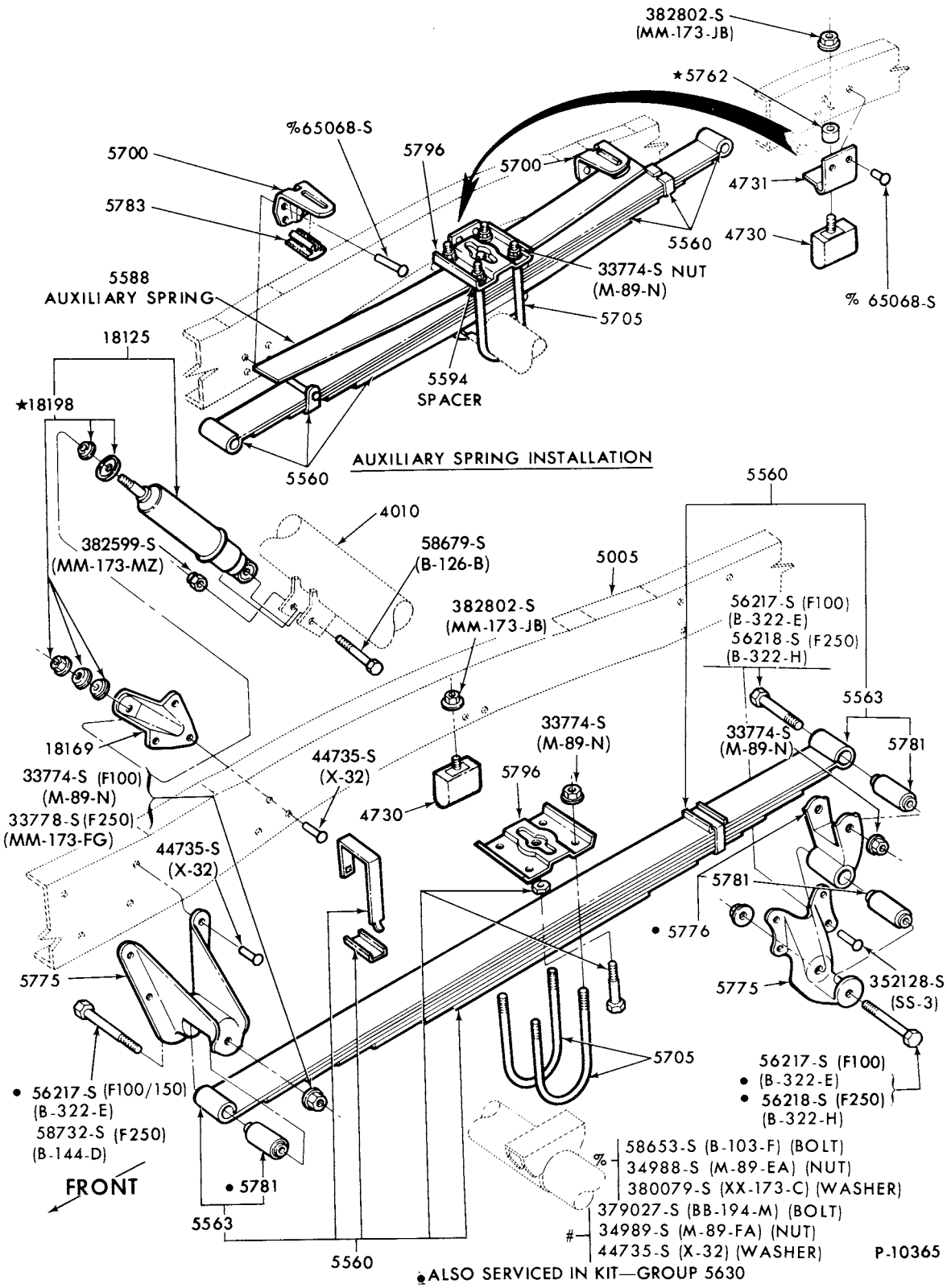

SPRINGS (REAR and AUXILIARY) and SHOCK ABSORBERS
1973/ F100/250--2/W/D

COPYRIGHT © 1979 -FORD MOTOR-DEARBORN, MICHIGAN
COMPANY

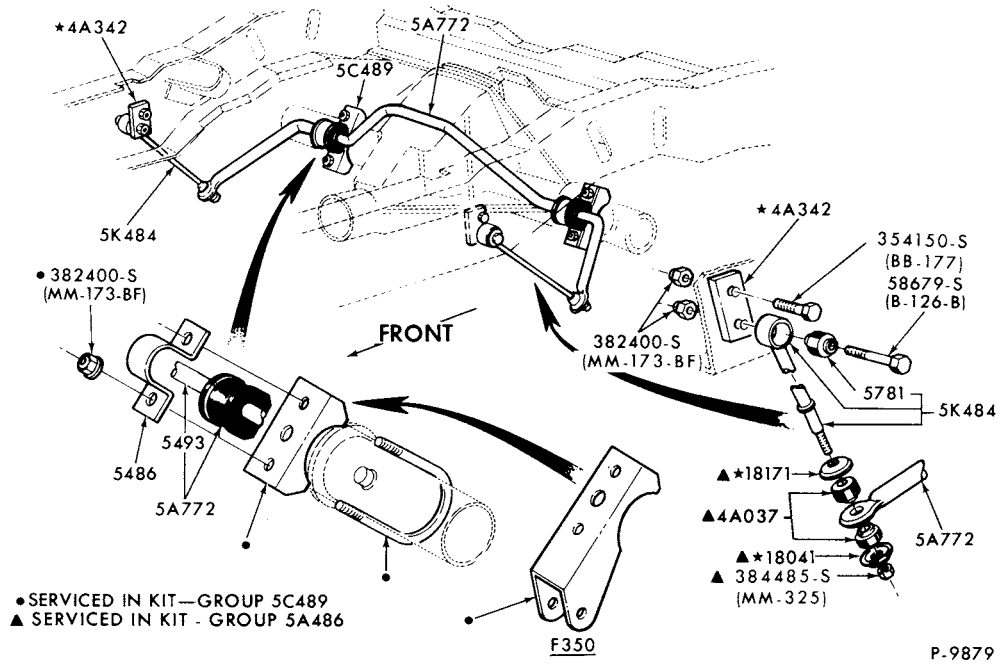

STABILIZER BAR - REAR
1973/ F250/350

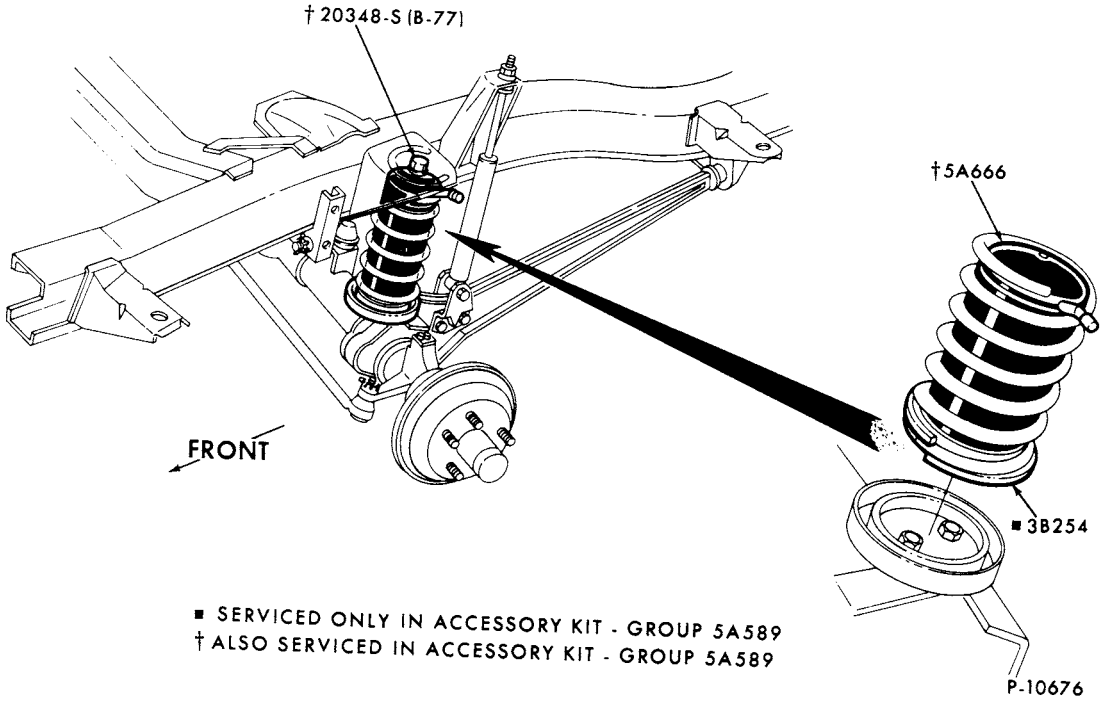

AUXILIARY AIR SPRINGS - FRONT
1973/ F100/350--4/W/D

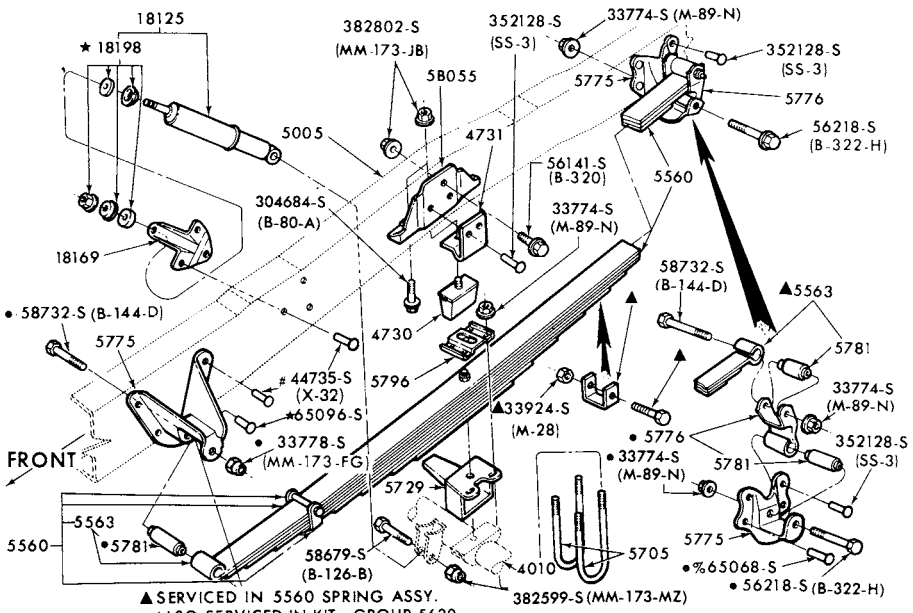

▲SERVICED IN 5560 SPRING ASSY.
•ALSO SERVICED IN KIT—GROUP 5630
% 58653-S (B-103-F) (BOLT) 34988-S (M-89-EA) (NUT) 380079-S (XX-173-C) (WASHER)
# 379027-S (BB-194-M) (BOLT) 34989-S (M-89-FA) (NUT) 44735-S (X-32) (WASHER)

P-10367

REAR SUSPENSION
1973/ F100/150--4/W/D

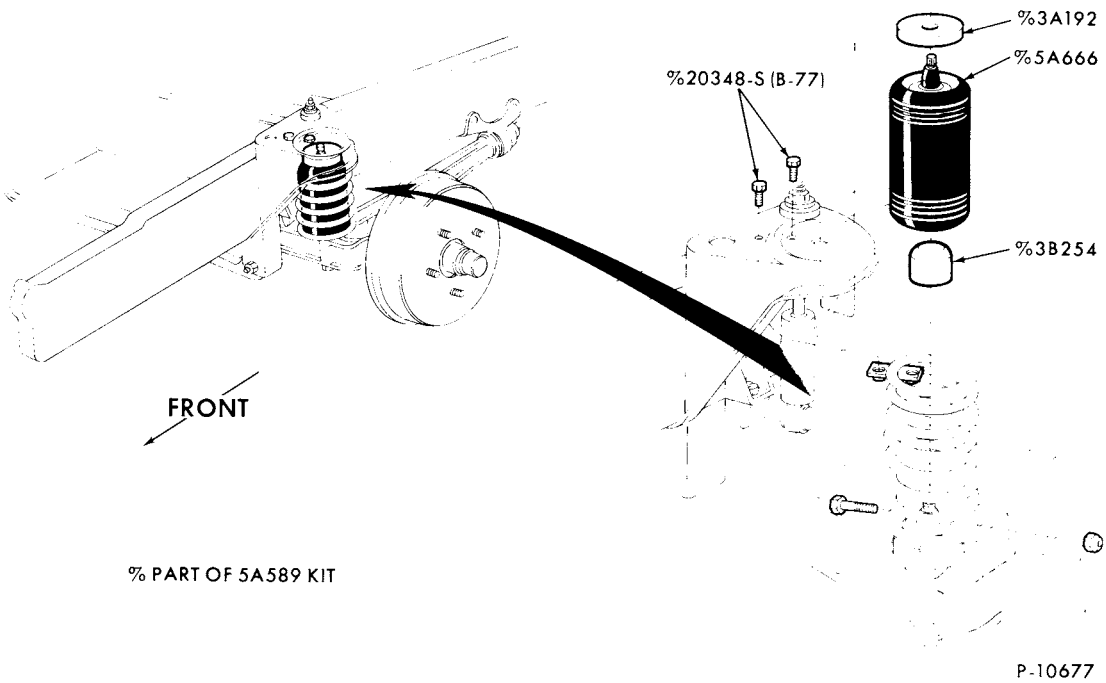

% PART OF 5A589 KIT

P-10677

AUXILIARY AIR SPRINGS - FRONT
1973/ F100/150--2/W/D

COPYRIGHT © 1979 FORD MOTOR COMPANY DEARBORN, MICHIGAN

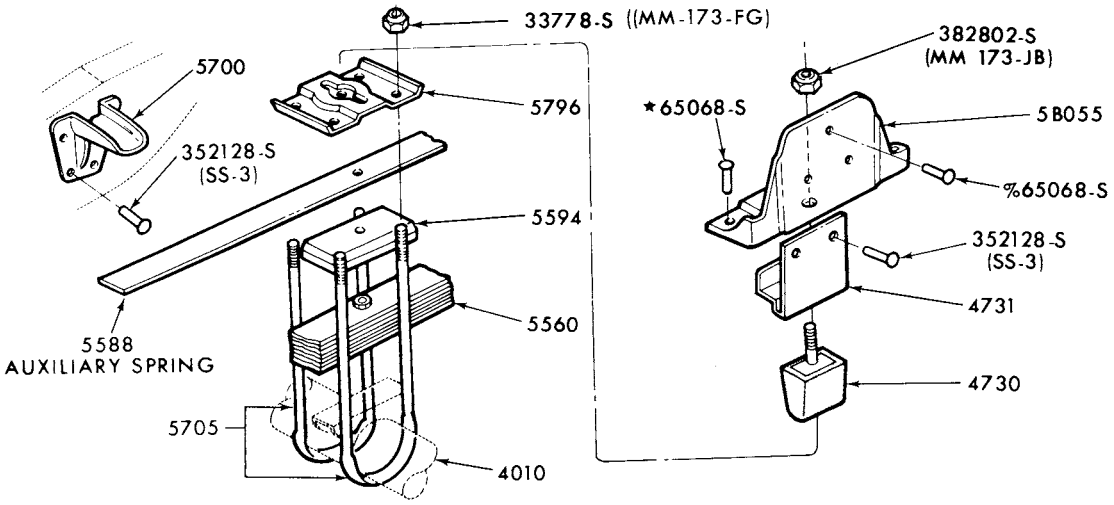

AUXILIARY SPRING INSTALLATION

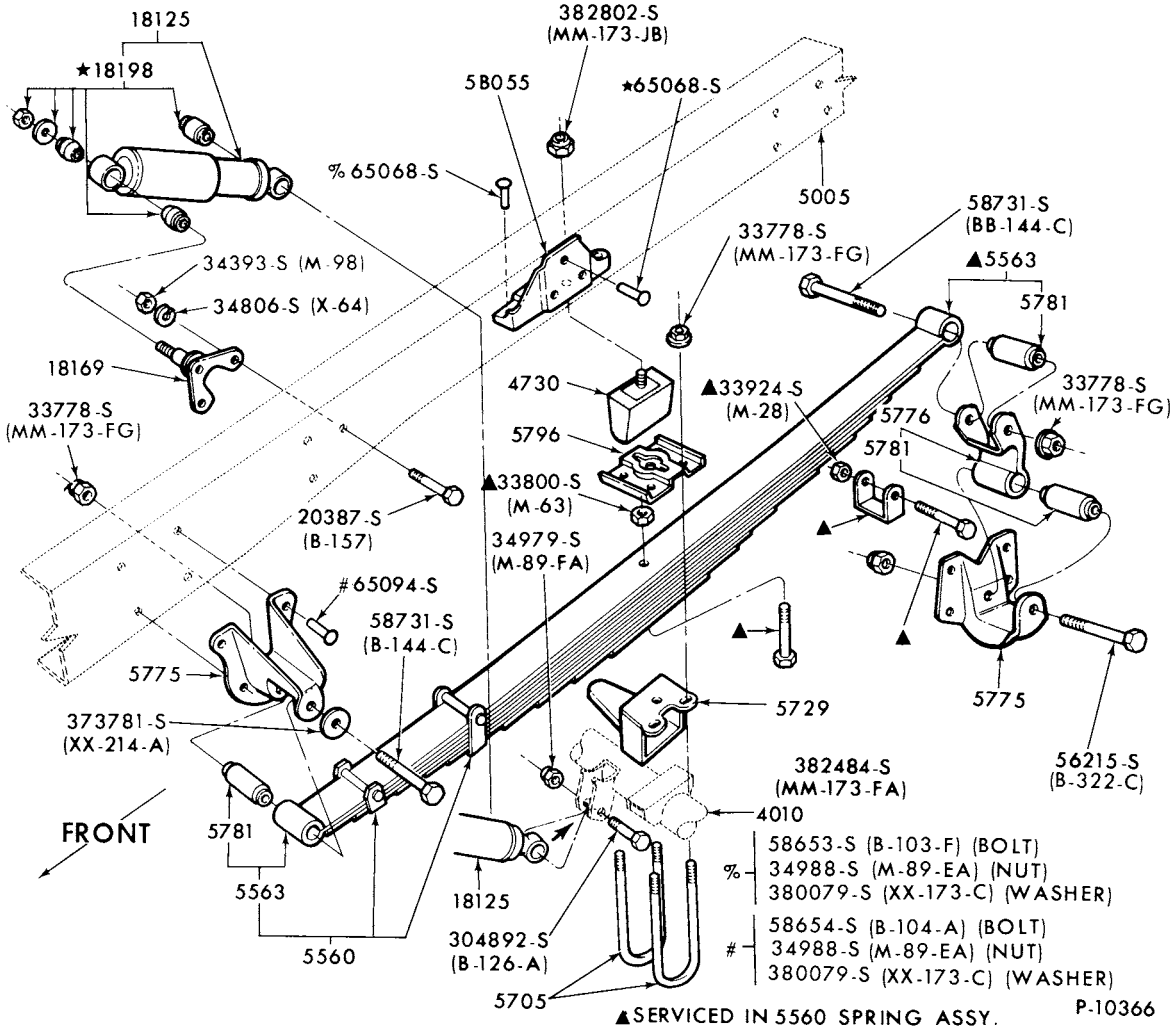

REAR SUSPENSION
1973/76 F250--4/W/D

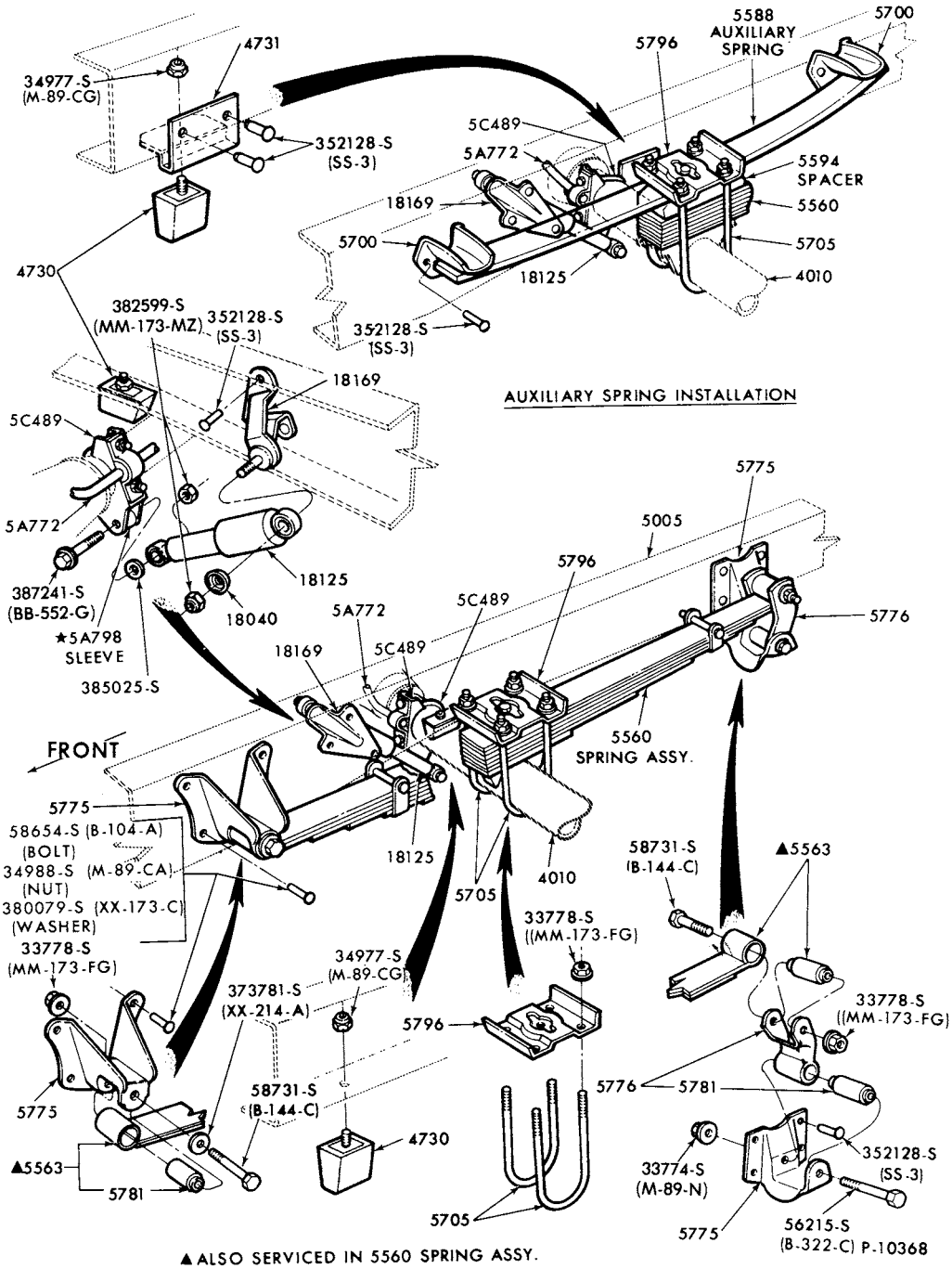

▲ALSO SERVICED IN 5560 SPRING ASSY.

REAR SUSPENSION

1973/ F250 (CREW CAB)--2/W/D, 1973/ F350

COPYRIGHT © 1979 -FORD MOTOR-DEARBORN, MICHIGAN COMPANY

1973/79 TRUCK SERIES 100/500

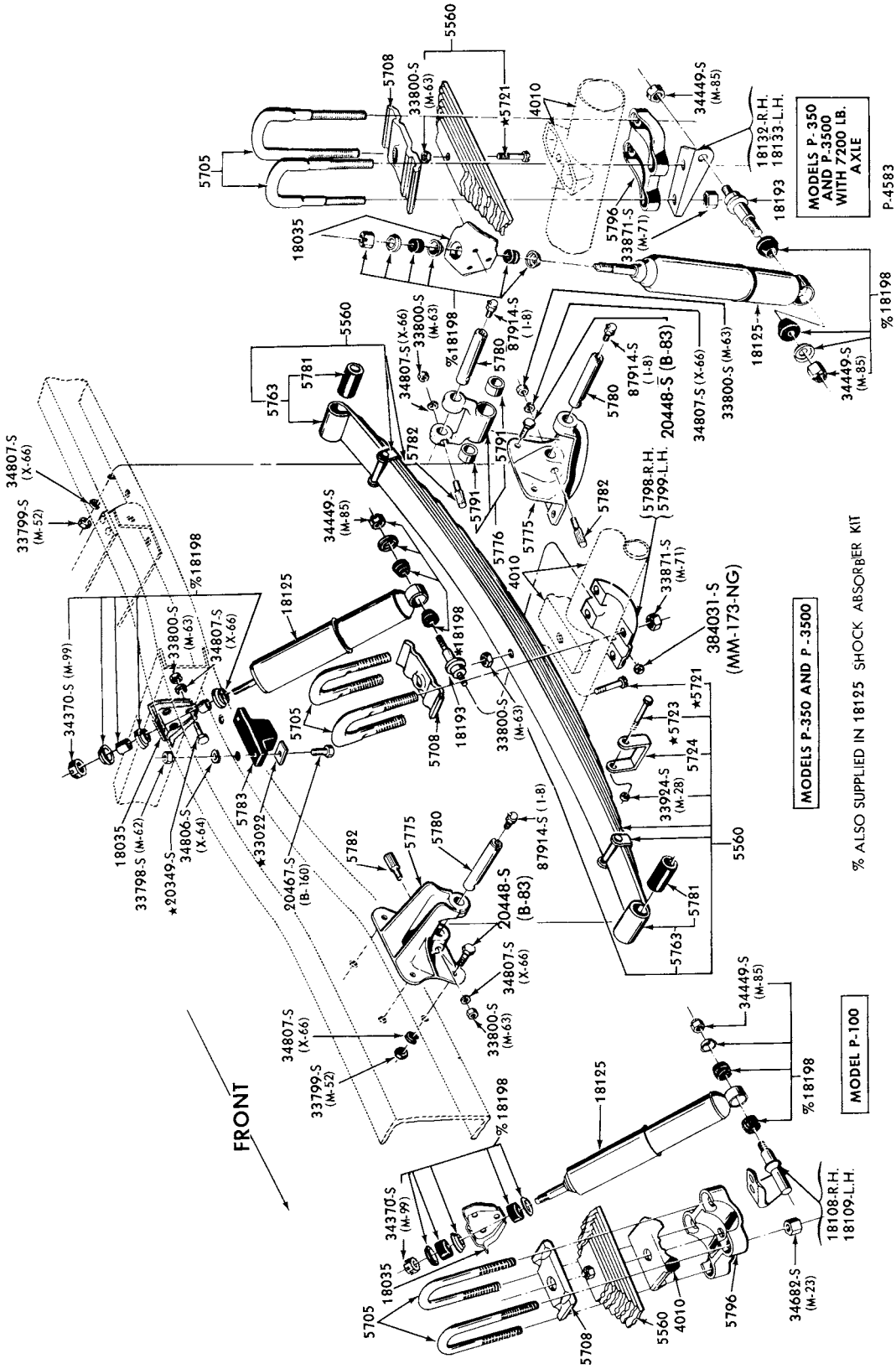

REAR SUSPENSION
1973/76 P350

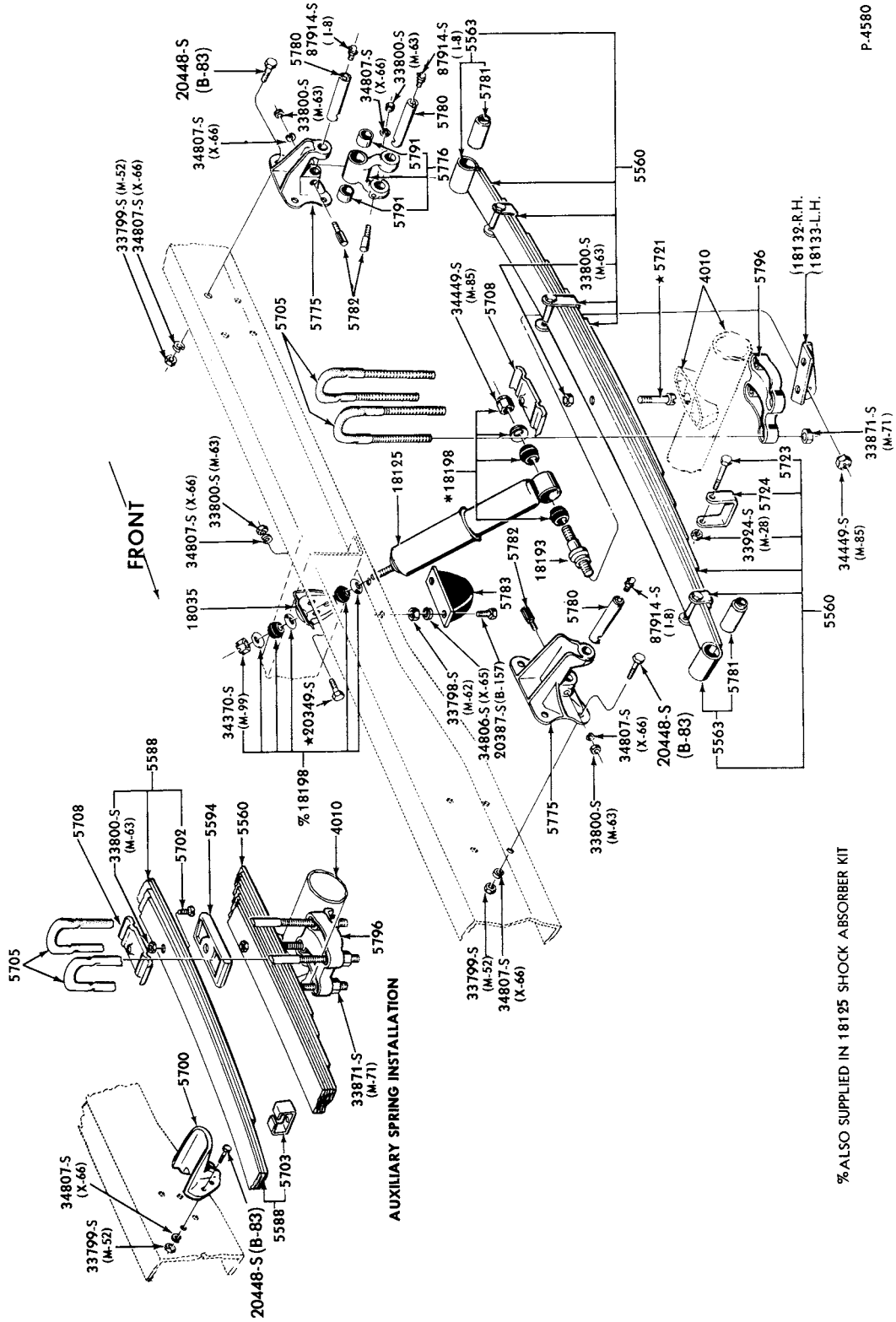

REAR SUSPENSION
1973/77 P400/500

COPYRIGHT © 1979 FORD MOTOR COMPANY
DEARBORN, MICHIGAN

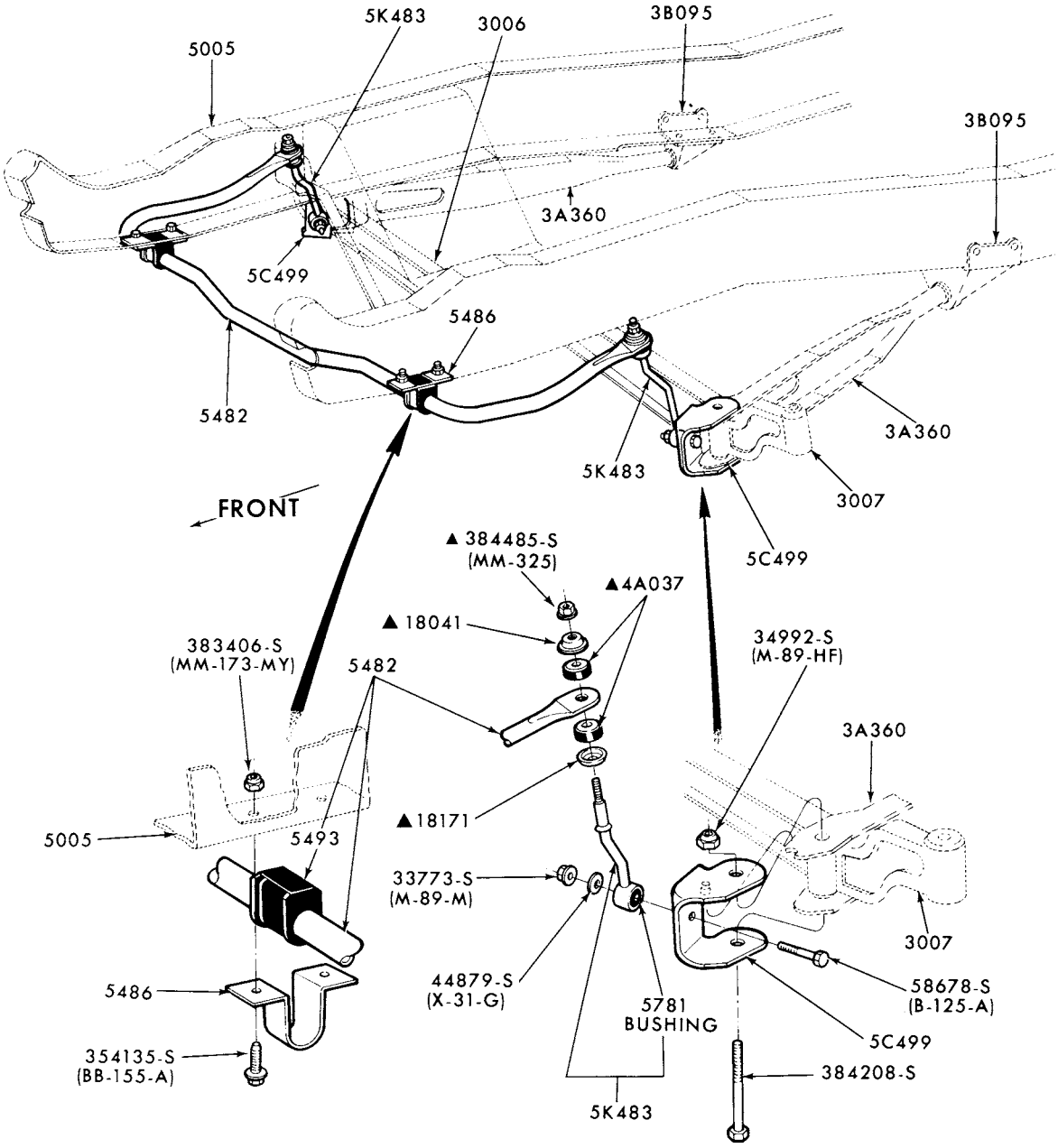

▲ SERVICED IN KIT - GROUP 5A486

P-11907

FRONT STABILIZER
1975/ F100/350--2/W/D

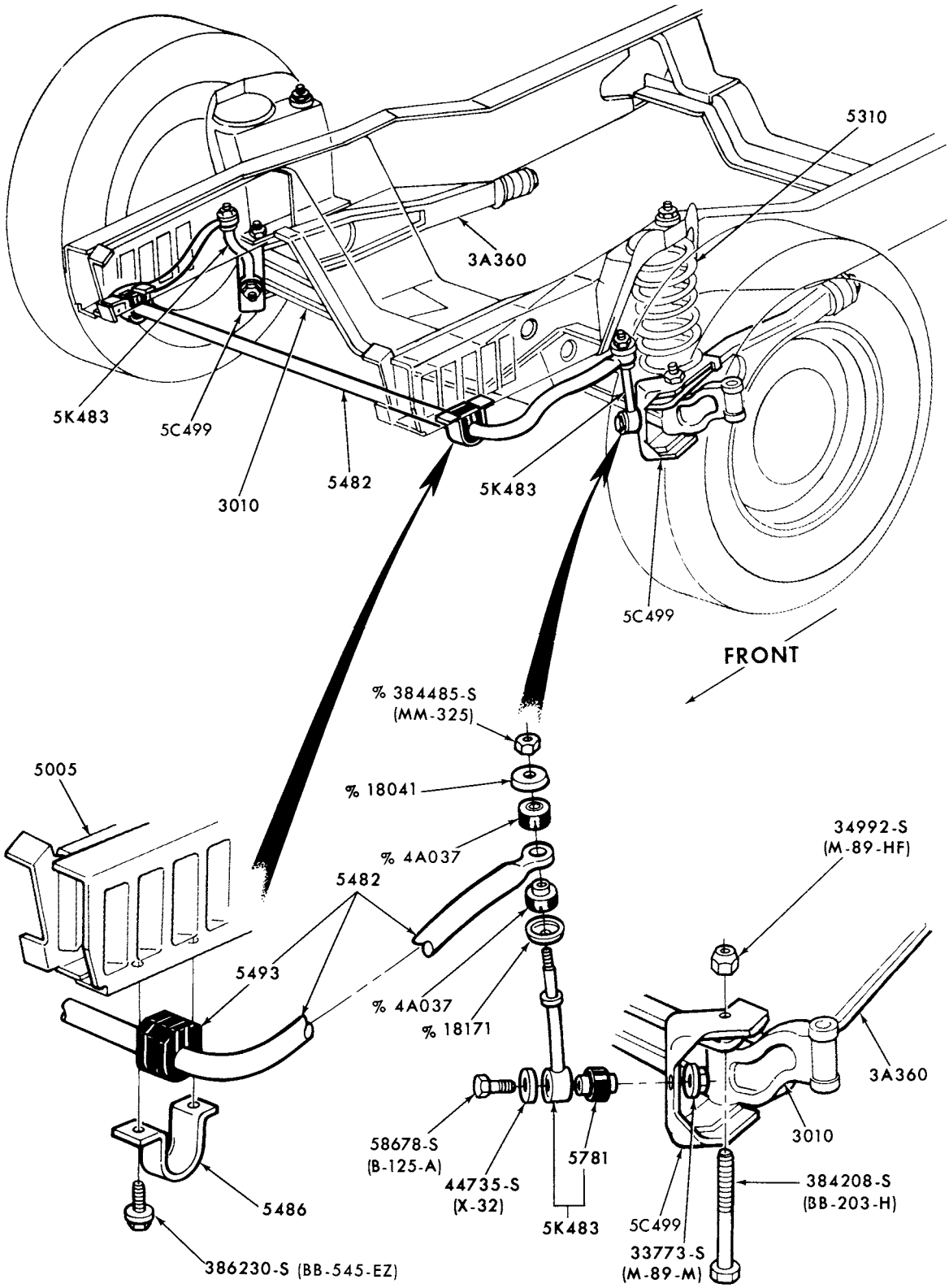

% SERVICED IN KIT - GROUP 5A486

r-11666

FRONT STABILIZER
1975/ E100/350

COPYRIGHT © 1979 - FORD MOTOR - DEARBORN, MICHIGAN
COMPANY

1973/79 TRUCK SERIES 100/500

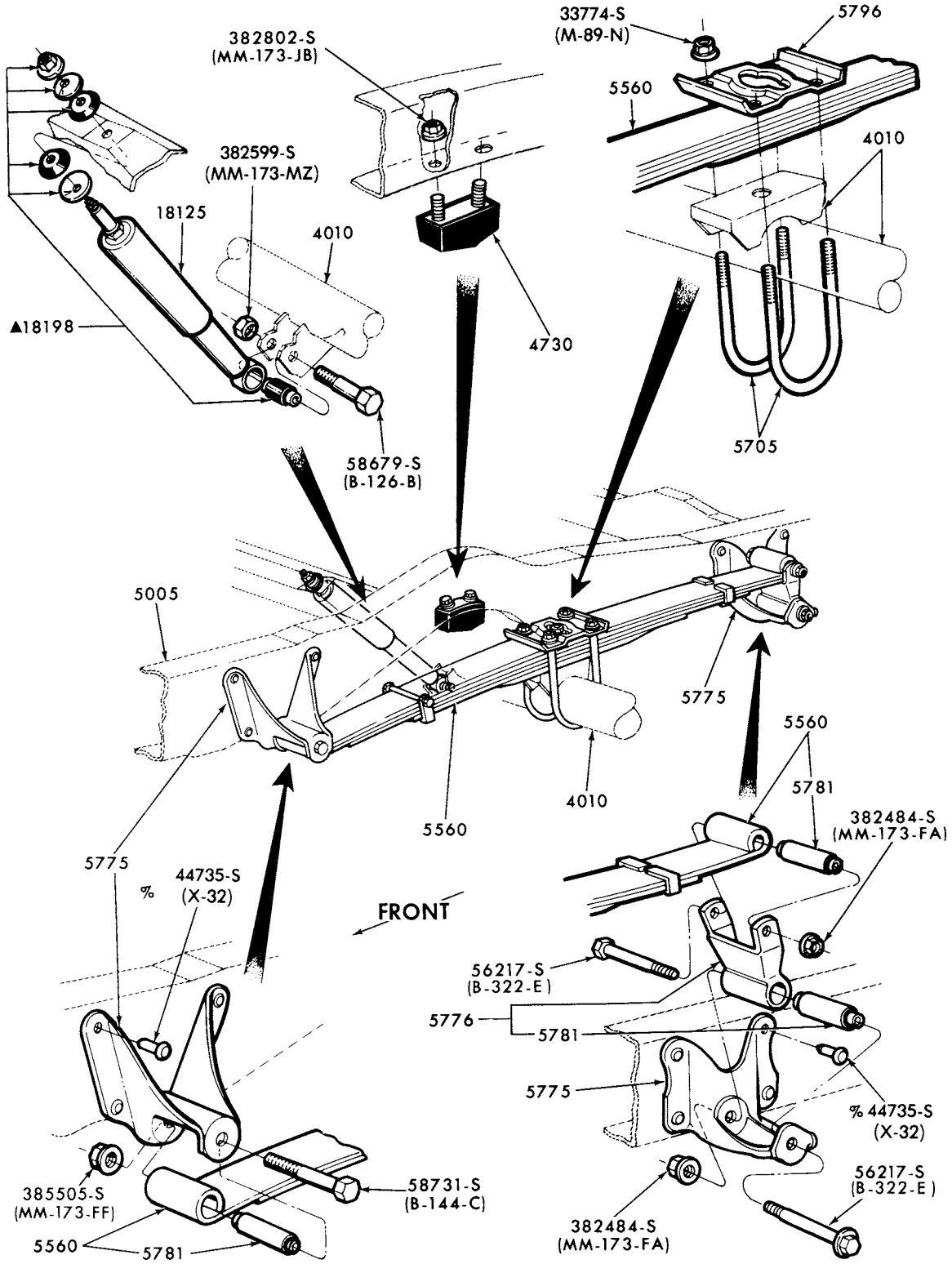

% USE 379027-S (BB-194-M) BOLT, 34989-S (M-89-FA) NUT, 44735-S (X-32) WASHER
▲ ALSO SERVICED IN 18125 SHOCK ABSORBER KIT

P-11489

REAR SUSPENSION
1975/ E100/150 and 1979 E250/350

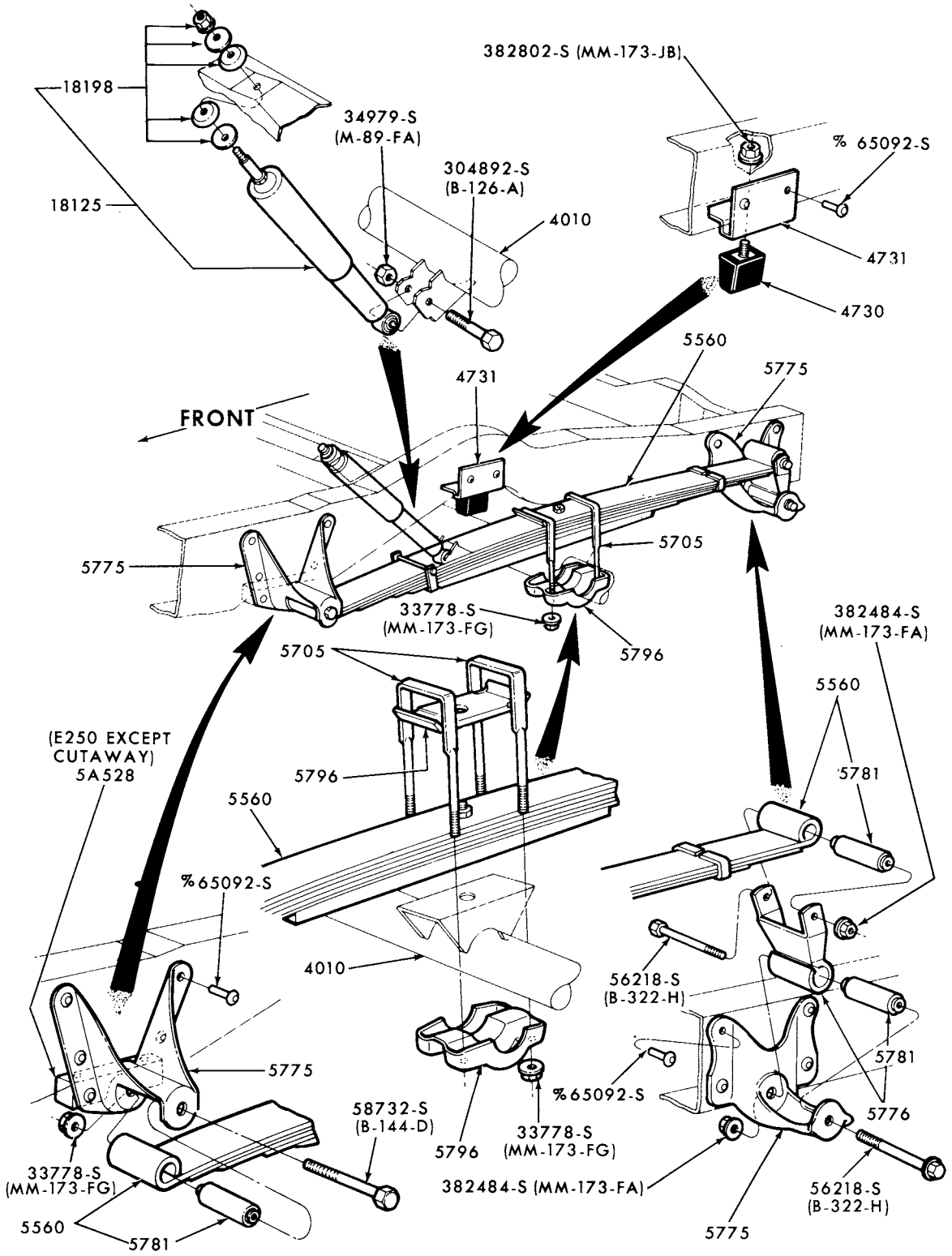

% USE 379027-S (BB-194-M) BOLT, 34989-S (M-89-FA) NUT, 44735-S (X-32) WASHER

P-11615

REAR SUSPENSION
1975/78 E250/350

COPYRIGHT © 1979 FORD MOTOR COMPANY, DEARBORN, MICHIGAN

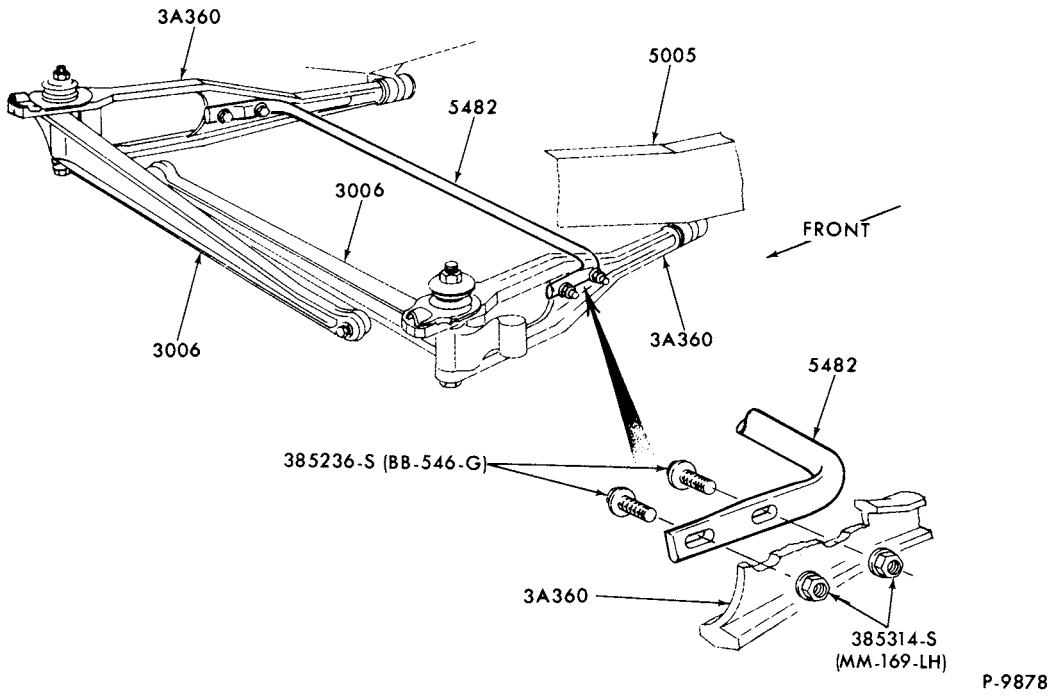

FRONT STABILIZER BAR and RELATED PARTS
1973/74 F250/350--2/W/D

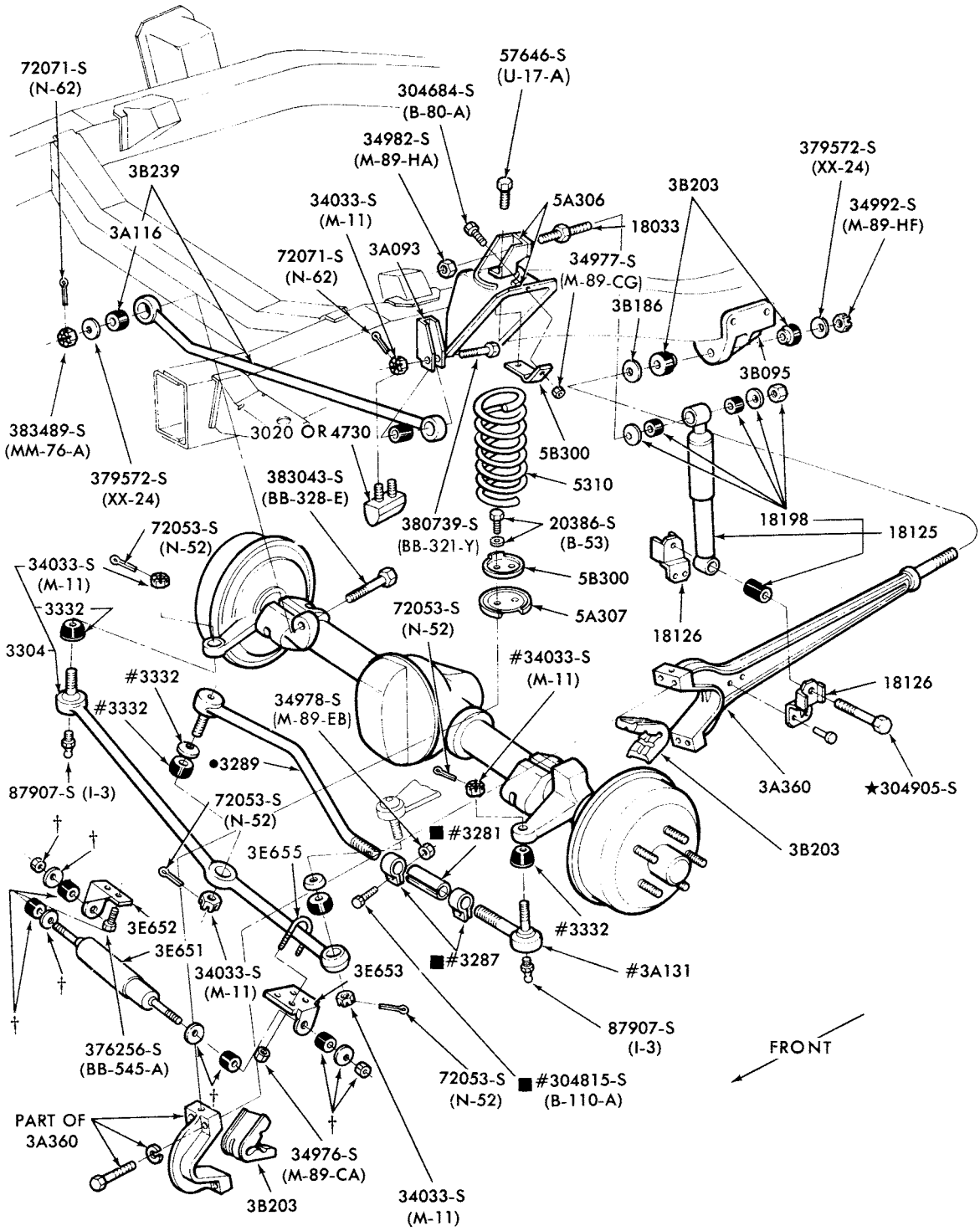

#ALSO SERVICED IN 3280 ROD ASSY.
•ONLY SERVICED IN 3280 ROD ASSY.

■ALSO SERVICED IN 3310 KIT (1978 ONLY)
† SERVICED ONLY IN 3E655 KIT

P-12741

FRONT SUSPENSION and STEERING LINKAGE-SINGLE SHOCK
1976/77 F100/150--4/W/D

COPYRIGHT © 1980— FORD MOTOR COMPANY —DEARBORN, MICHIGAN

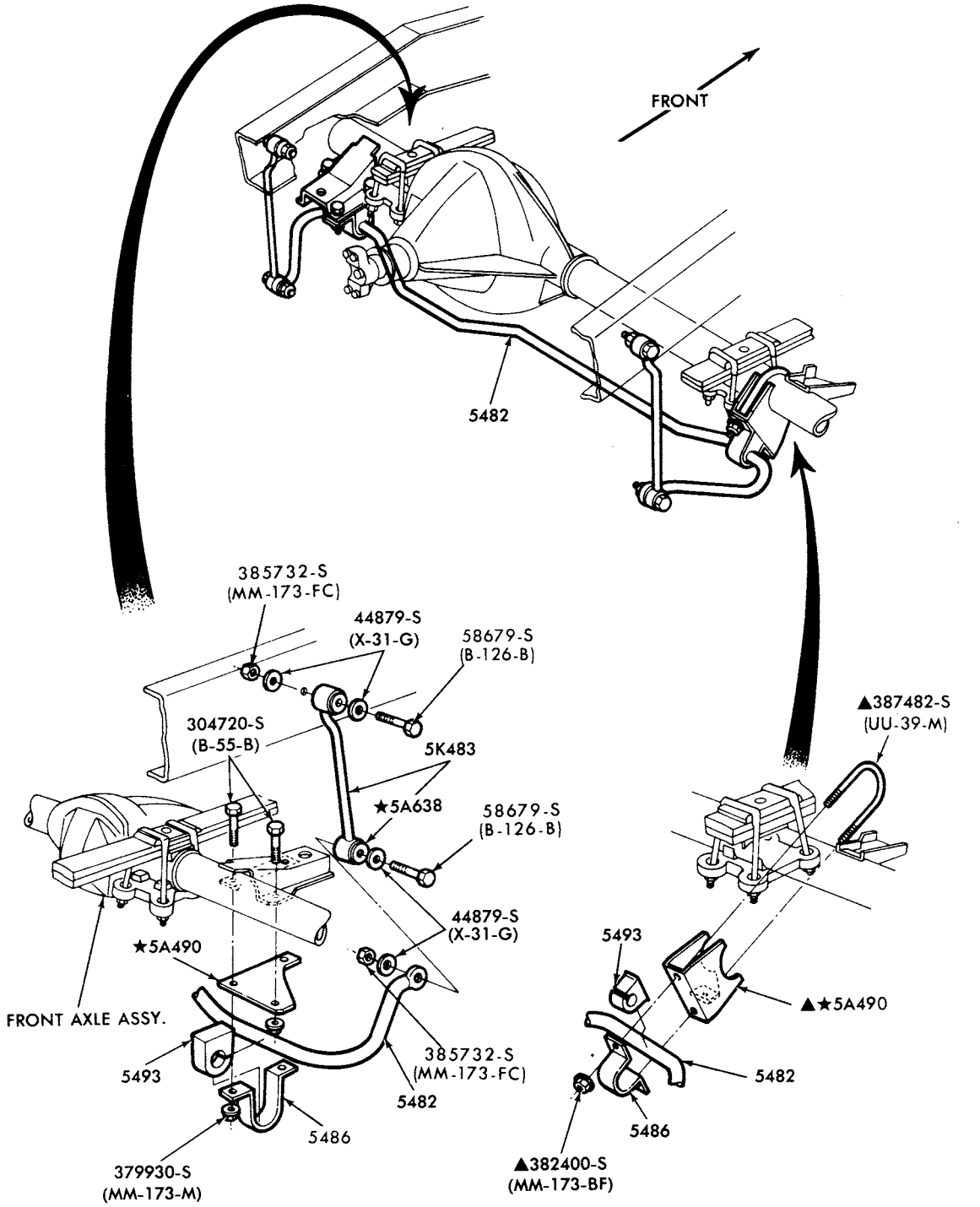

▲SERVICED IN 5C489 KIT

P-13377

FRONT STABILIZER BAR and RELATED PARTS
1977/ F150--4/W/D (SUPER CAB) and F250/350--4/W/D

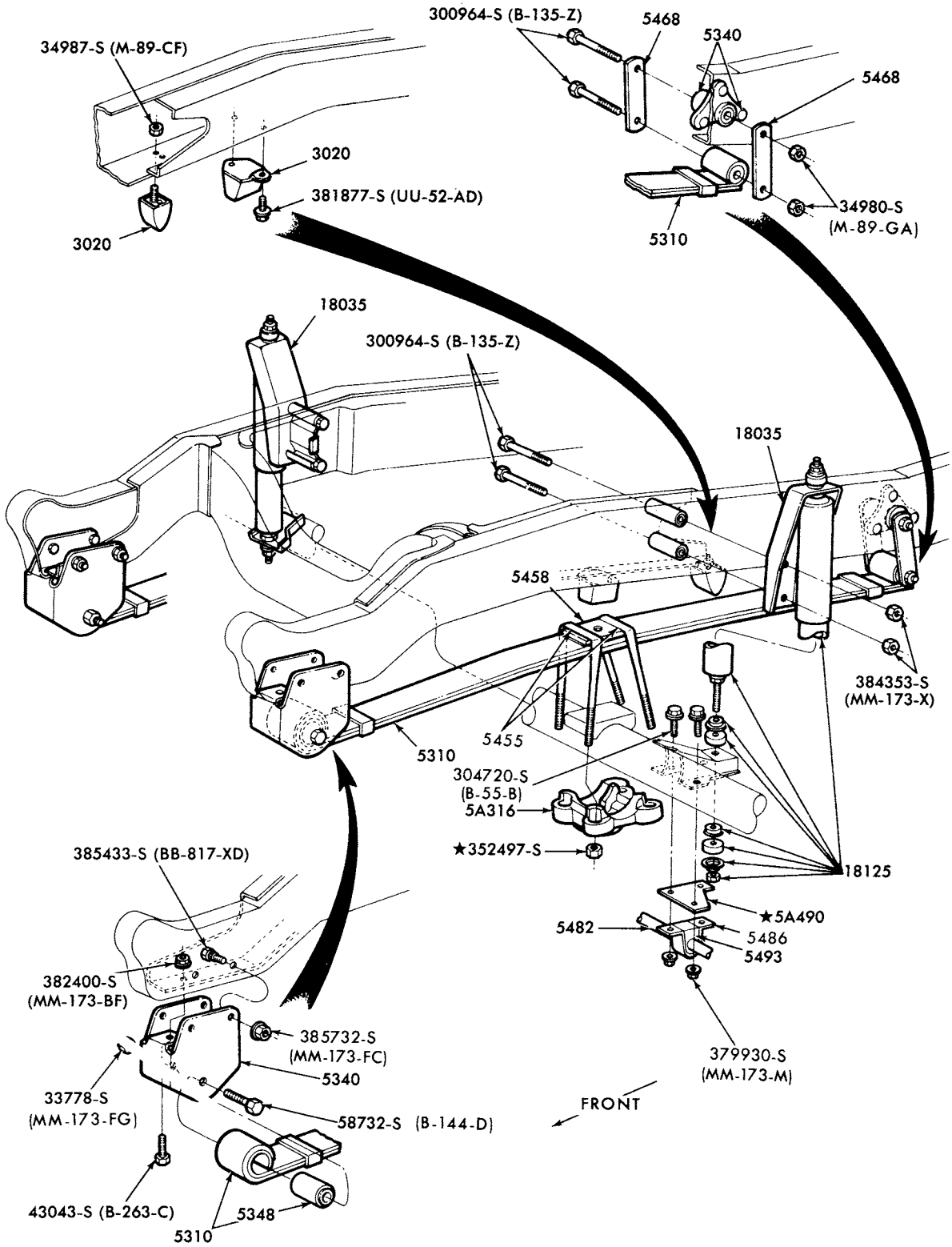

P-13384

FRONT SUSPENSION
1977/ F250/350--4/W/D-"From Ser. 420,000"
1978/ F150--4/W/D (SUPER CAB)

COPYRIGHT © 1980— FORD MOTOR COMPANY —DEARBORN, MICHIGAN

1973/79 TRUCK SERIES 100/500

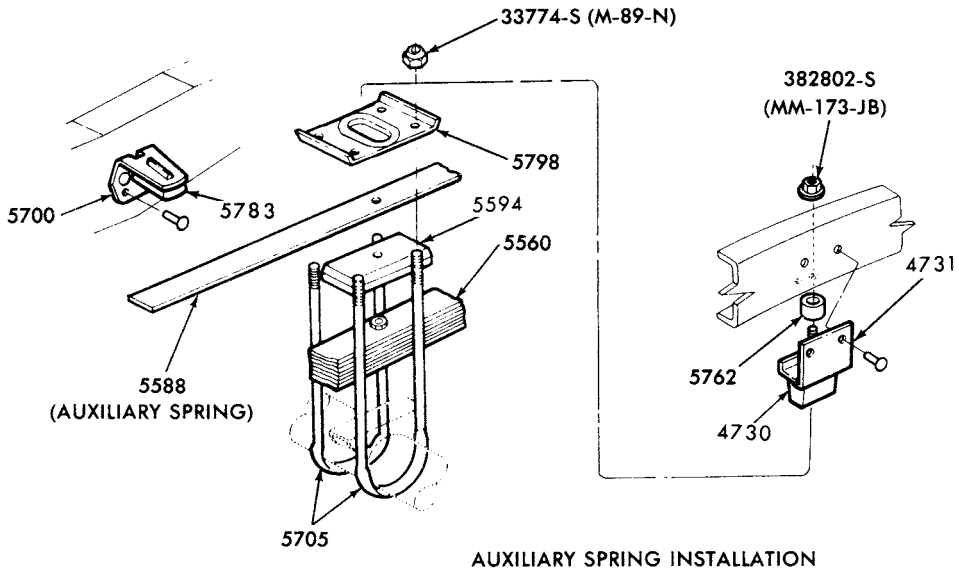

AUXILIARY SPRING INSTALLATION

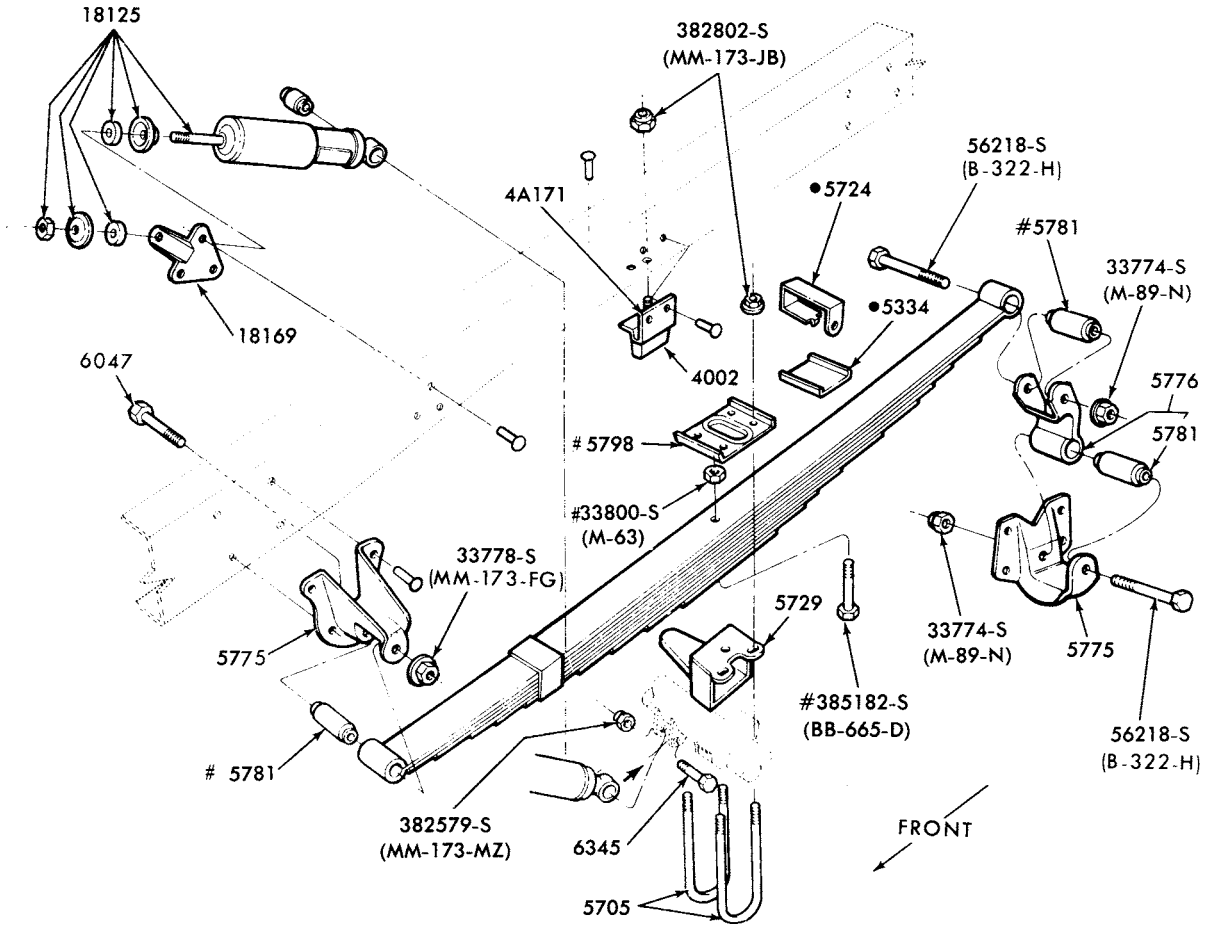

#ALSO SERVICED IN 5560 SPRING ASSY.
• ONLY SERVICED IN 5560 SPRING ASSY.

P-13388

REAR SUSPENSION
1977/ F250/350--4/W/D

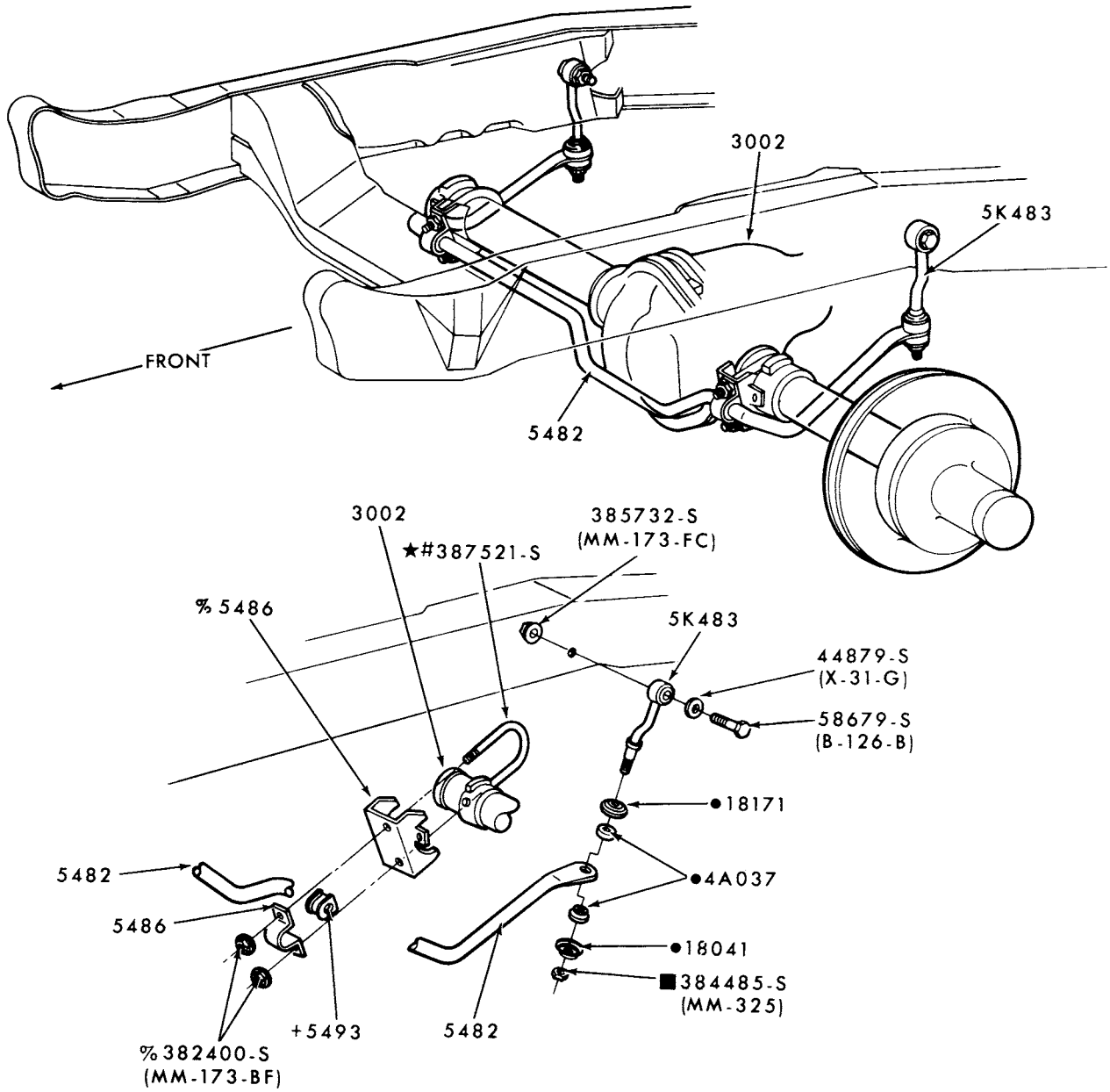

+ALSO SERVICED IN GROUP 5482
● SERVICED ONLY IN KIT 5A486
■ALSO SERVICED IN KIT 5A486
%ALSO SERVICED IN KIT 5C489
#SERVICED ONLY IN KIT 5C489

P-14038

FRONT STABILIZER
1978/ F150--4/W/D (REGULAR CAB)

COPYRIGHT © 1980 FORD MOTOR COMPANY-DEARBORN, MICHIGAN

INDEX

THIS INDEX SECTION INCLUDES THE FOLLOWING MAJOR GROUPS:

AIR CLEANER OIL BREATHER CAP
CAMSHAFT
CRANKCASE VENT SYSTEM
CRANKSHAFT and FLYWHEEL
CYLINDER BLOCK and RELATED PARTS
CYLINDER HEAD, VALVES and EXHAUST MANIFOLD
EMISSION REDUCTION SYSTEM
ENGINE
ENGINE SUPPORTS
OIL FILTER
OIL PUMP and PAN
PISTON and CONNECTING ROD
VALVES, PUSH RODS and COVERS

1973/

TITLE	SECTION	PAGE	ILLUS. NO.
6 CYL. 240			
Camshaft, gear and bearings	61	1	P-4873
Crankshaft, flywheel and related parts	61	1	P-4874
Cylinder block and related parts -			
(external)	60	2	P-7853
(internal)	60	3	P-7854
Emission reduction system	66	6	P-7701
Engine assembly	60	1	P-8400
Engine block immersion heater	60	11	P-11319
Engine supports -			
(front)--E100/300	60.1	1	P-6358
(rear)--E100/300	60.1	1	P-6359
(front and rear)--F100-2/W/D	60.1	3	P-5266
(front and rear)--F100-4/W/D	60.1	2	P-5267
Oil filter and related parts	66	4	P-2384
Oil pump (rotor type)	66	1	P-4872
Oil filler pipe installation -			
E100/300	66	7	P-6767
Piston and connecting rod	61	2	P-4877
Valves, push rods, rocker arm cover and related parts	61	2	P-3726
6 CYL. 300			
Camshaft, gear and bearing	61	1	P-4873
Crankshaft, flywheel and related parts	61	1	P-4874
Cylinder block and related parts -			
(external)	60	2	P-7853
(internal)	60	3	P-7854
Emission reduction system -			
B-F250/500	66	6	P-7701
P350/500 (1973/77)	66	6	P-9257
Engine assembly	60	1	P-8400
Engine block immersion heater	60	11	P-11319
Engine supports -			
1973/74 (front)--E100/300	60.1	1	P-6358
1973/74 (rear)--E100/300	60.1	1	P-6359
1975/(front and rear)--E100/350	60.1	9	P-11658
1973/76 (front and rear)--F100/250-2/W/D	60.1	3	P-5266
1973/76 (front and rear) --F100/250-4/W/D	60.1	2	P-5267
1977/ (front and rear)-- F250/350-4/W/D	60.1	10	P-13385
1977/ (front and rear)--F150-4/W/D	60.1	11	P-13386
1973/76 (front and rear)--F350	60.1	3	P-5266
1977/ (front and rear)--F100/350-2/W/D	60.1	12	P-14444
(front and rear)--B-F500 (1973/77)	60.1	4	P-5822
(front and rear)--P350/500 (1973/77)	60.1	5	P-11551
6 CYL. 300 - cont'd.			
Oil filter and related parts	66	4	P-2384
Oil pump (rotor type)	66	1	P-4872
Piston and connecting rod	61	2	P-4877
Valves, push rods, rocker arm cover and related parts	61	2	P-3726
8 CYL. 302			
Camshaft gear and bearings	61	7	P-3733
Crankshaft and flywheel	61	9	P-3734
Cylinder block and related parts			
(external)	60	6	P-8369
(internal)	60	5	P-8370
Cylinder head valves and related parts	61	8	P-3727
Emission reduction system -			
E100/300 (73/74)	66	5	P-11599
E100/350 (1975/)	66	9	P-12261
Engine assembly	60	4	P-8372
Engine block immersion heater	60	11	P-11319
Engine supports -			
(front)--E100/300	60.1	1	P-6358
(rear)--E100/300	60.1	1	P-6359
1979 (front and rear)--E100/250	60.1	8	P-11552
1973/76 (front and rear)--F100/150	60.1	3	P-5266
1977/ (front and rear)--F100/150	60.1	12	P-14444
Oil filter and related parts	66	4	P-2384
Oil filler pipe installation-			
E100/350	66	7	P-6767
Oil pump and related parts	66	3	P-3736
Piston and connecting rod	61	8	P-3732
Valves, push rods and related parts	61	2	P-3726
8 CYL. 330 M/D			
Camshaft, gear and bearings	61	3	P-4878
Crankshaft, flywheel and related parts	61	3	P-4875
Cylinder block and related parts	60	9	P-2881
Emission reduction system	66	5	P-4504
Engine assembly	60	7	P-8402
Engine block immersion heater	60	11	P-11319
Engine supports -			
(front and rear)--B-F500 (1973/77)	60.1	3	P-5821
Oil filter and related parts	66	4	P-4792
Oil pump and related parts	66	1	P-2588
Piston and connecting rod	61	2	P-4877
Valve, push rods, rocker arm cover and related parts	61	4	P-4876

COPYRIGHT © 1979 FORD MOTOR COMPANY —DEARBORN, MICHIGAN

INDEX

1973/

TITLE	SECTION	PAGE	ILLUS. NO.
8 CYL. 351			
Camshaft, gear and bearings	61	7	P-3733
Crankshaft and flywheel	61	9	P-3734
Cylinder block			
- external (Windsor)	60	6	P-8369
- internal (Windsor)	60	5	P-8370
- external (modified)	60	12	P-8367
- internal (modified)	60	13	P-8368
Cylinder head, valves and related parts	61	8	P-3727
Emission reduction system			
- modified	66	9	P-10347
- Windsor	66	9	P-12261
Engine assy.	60	4	P-8372
Engine supports			
1975/ (front and rear)--E100/350	60.1	8	P-11552
1977/ (front and rear)--F100/350-2/W/D	60.1	12	P-14444
1977/ (front and rear)--F250-4/W/D	60.1	10	P-13385
1977/ (front and rear)--F150-4/W/D	60.1	11	P-13386
1979 (front and rear)--F350-4/W/D	60.1	10	P-13385
Oil filler pipe installation--E100/350	66	7	P-6767
Oil filter (spin-on type)	66	4	P-2384
Oil pump	66	3	P-3736
Piston and connecting rod	61	8	P-3732
Valves, push rods and rocker arm cover	61	2	P-3726
8 CYL. 360			
Camshaft, gear and bearings	61	3	P-4878
Crankshaft, flywheel and related parts	61	5	P-4871
Cylinder block and related parts	60	9	P-2881
Engine assembly	60	8	P-8401
Engine block immersion heater	60	11	P-11319
Engine supports -			
(front and rear)--F100/250-2/W/D	60.1	3	P-5266
(front and rear)--F100-4/W/D- "Before Ser. T20,001"	60.1	2	P-5267
(front and rear)-- F100/150-4/W/D "From Ser. T20,001"	60.1	6	P-11166
(front and rear)--F250-4/W/D	60.1	2	P-5267
(front and rear)--F350	60.1	3	P-5266
(front)--M450/500	60.1	7	P-11556
(rear)--M450/500	60.1	7	P-12008
Oil filter and related parts	66	3	P-8892
Oil level indicator, oil filler and related parts -			
(1973)--M450/500	66	7	P-11558
(1974/76)--M450/500	66	8	P-11563
Oil pump and related parts	66	2	P-2476
Piston and connecting rod	61	2	P-4877
Valve, push rods, rocker arm cover and related parts	61	6	P-2485
8 CYL. 400			
Camshaft, gear and bearings	61	7	P-3733
Crankshaft and flywheel	61	9	P-3734
Cylinder head, valves and related parts	61	8	P-3727
Cylinder block			
- external parts	60	12	P-8367
- internal parts	60	13	P-8368
8 CYL. 400 - cont'd.			
Emission reduction system	66	9	P-10347
Engine assy.	60	4	P-8372
Engine supports -			
1977/ (front and rear)--F100/350-2/W/D	60.1	12	P-14444
1977/ (front and rear)--F150-4/W/D	60.1	11	P-13386
1977/ (front and rear)-- F250/350-4/W/D	60.1	10	P-13385
Oil filters			
- spin-on type	66	4	P-2384
Oil pump	66	3	P-3736
Piston and connecting rod	61	8	P-3732
Valves, push rods and rocker arm cover	61	2	P-3726
8 CYL. 390			
Camshaft, gear and bearings	61	3	P-4878
Crankshaft, flywheel and related parts	61	5	P-4871
Cylinder block and related parts	60	9	P-2881
Engine assembly	60	8	P-8401
Engine block immersion heater	60	11	P-11319
Engine supports -			
(front and rear)--F100/350	60.1	3	P-5266
(front)--M450/500	60.1	7	P-11556
(rear)--M450/500	60.1	7	P-12008
Oil filter and related parts	66	3	P-8892
Oil level indicator, oil filler and related parts -			
(1973)--M450/500	66	7	P-11558
(1974/76)--M450/500	66	8	P-11563
Oil pump and related parts	66	2	P-2476
Piston and connecting rod	61	2	P-4877
Valve, push rods, rocker arm cover and related parts	61	6	P-2485
8 CYL. 460			
Camshaft, gear, bearings and related parts	61	7	P-3733
Crankshaft, flywheel and related parts	61	9	P-3734
Cylinder block			
- external parts	60	6	P-8369
- internal parts	60	5	P-8370
Cylinder head, valves and related parts	61	8	P-3727
Engine assy.	60	10	P-8403
Engine block immersion heater	60	11	P-11319
Engine supports -			
(front and rear)--E250/350	60.1	8	P-11552
(front and rear)--F100/350	60.1	5	P-10543
(front)--M450/500	60.1	7	P-11556
(rear)--M450/500	60.1	7	P-12008
Oil filler pipe installation--E100/350	66	7	P-6767
Oil filter (spin-on type) and related parts			
- without adapter	66	4	P-2384
- with adapter	66	10	P-15008
Oil level indicator, oil filler and related parts -			
(1974/76)--M450/500	66	8	P-11562
Oil pump and related parts	66	3	P-3736
Piston, connecting rod and related parts	61	8	P-3732
Valves, push rods, rocker arm cover and related parts	61	2	P-3726

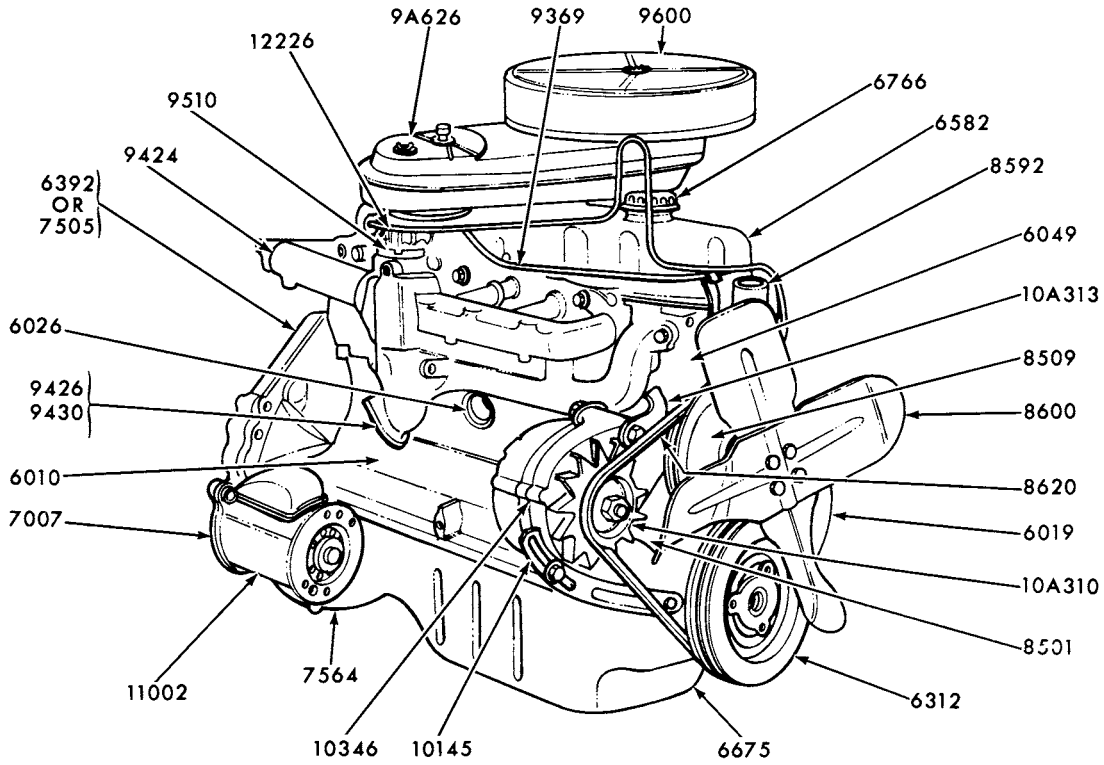

RIGHT-FRONT VIEW

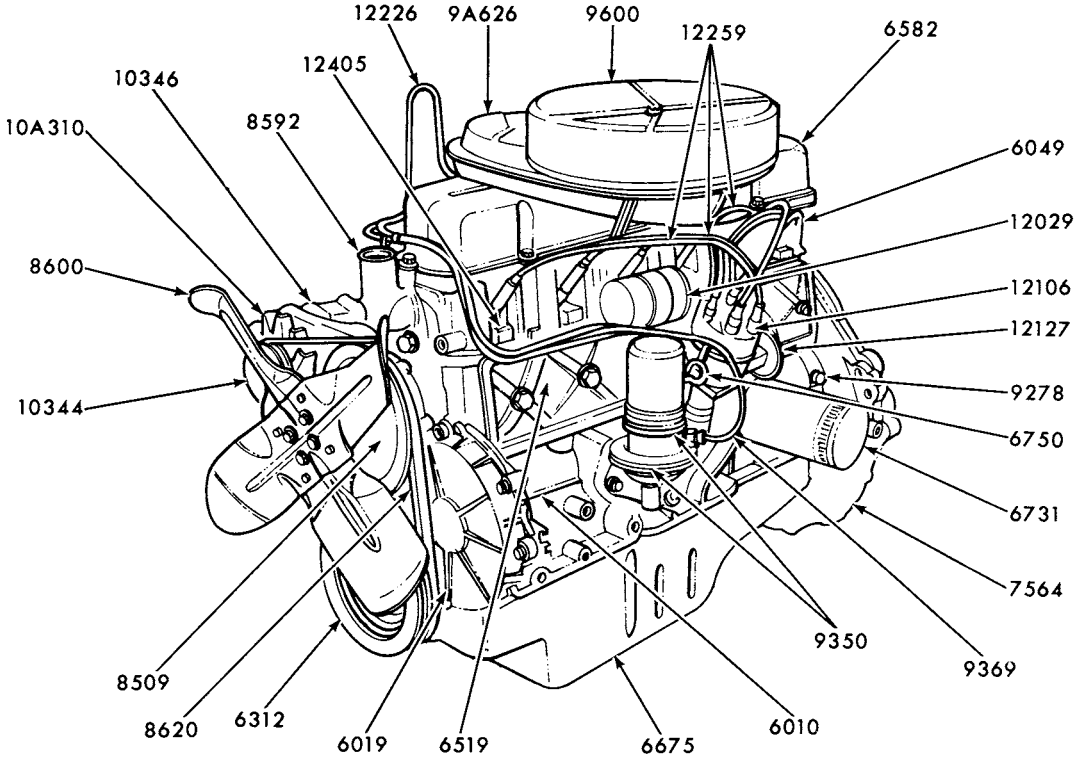

LEFT-FRONT VIEW

P-8400

ENGINE ASSY.-TYPICAL
1973/ 6 CYL. 240 and 300

COPYRIGHT © 1979 — FORD MOTOR COMPANY — DEARBORN, MICHIGAN

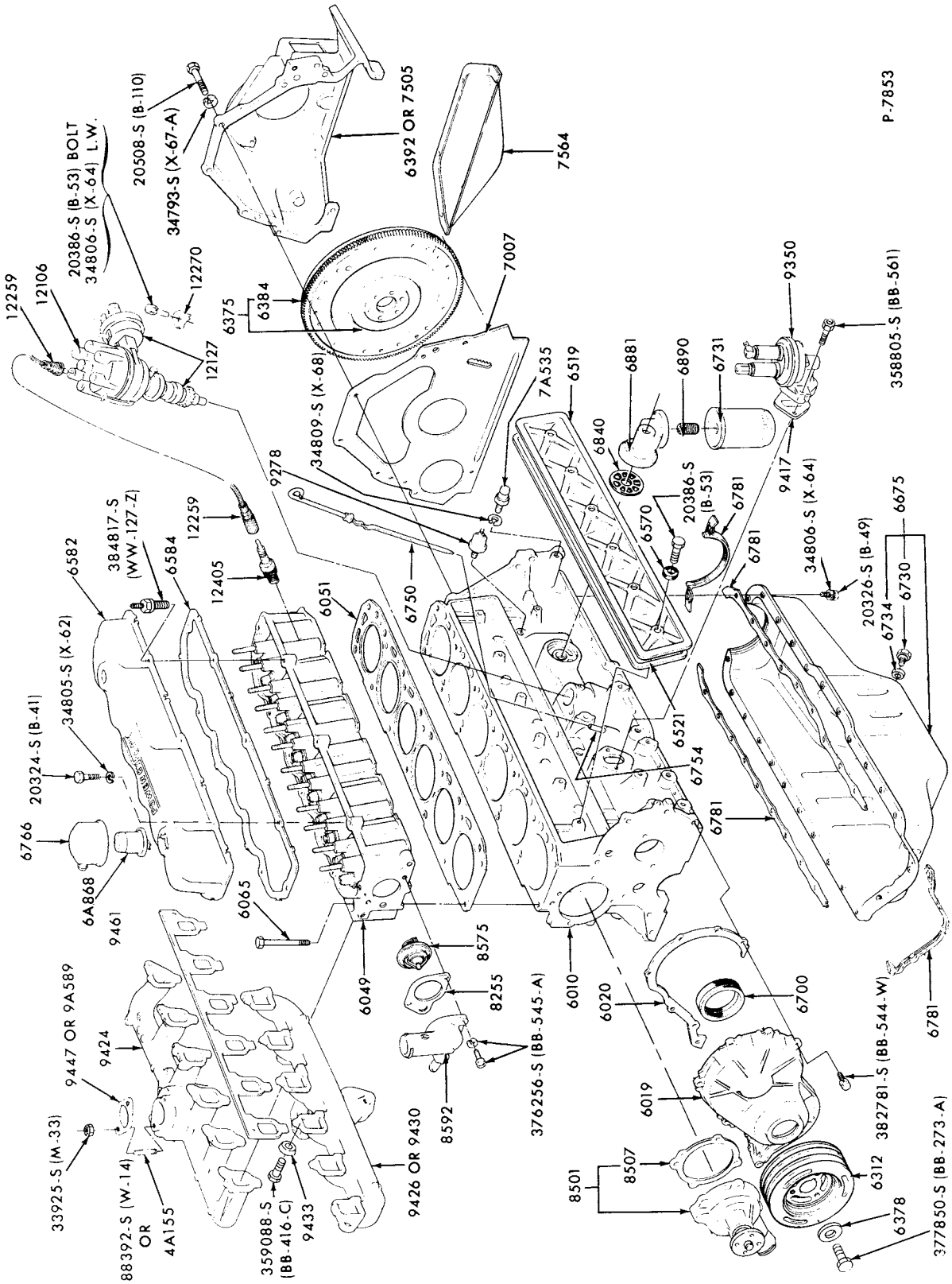

CYLINDER BLOCK and RELATED PARTS (EXTERNAL
1973/ 6 CYL. 240 and 300

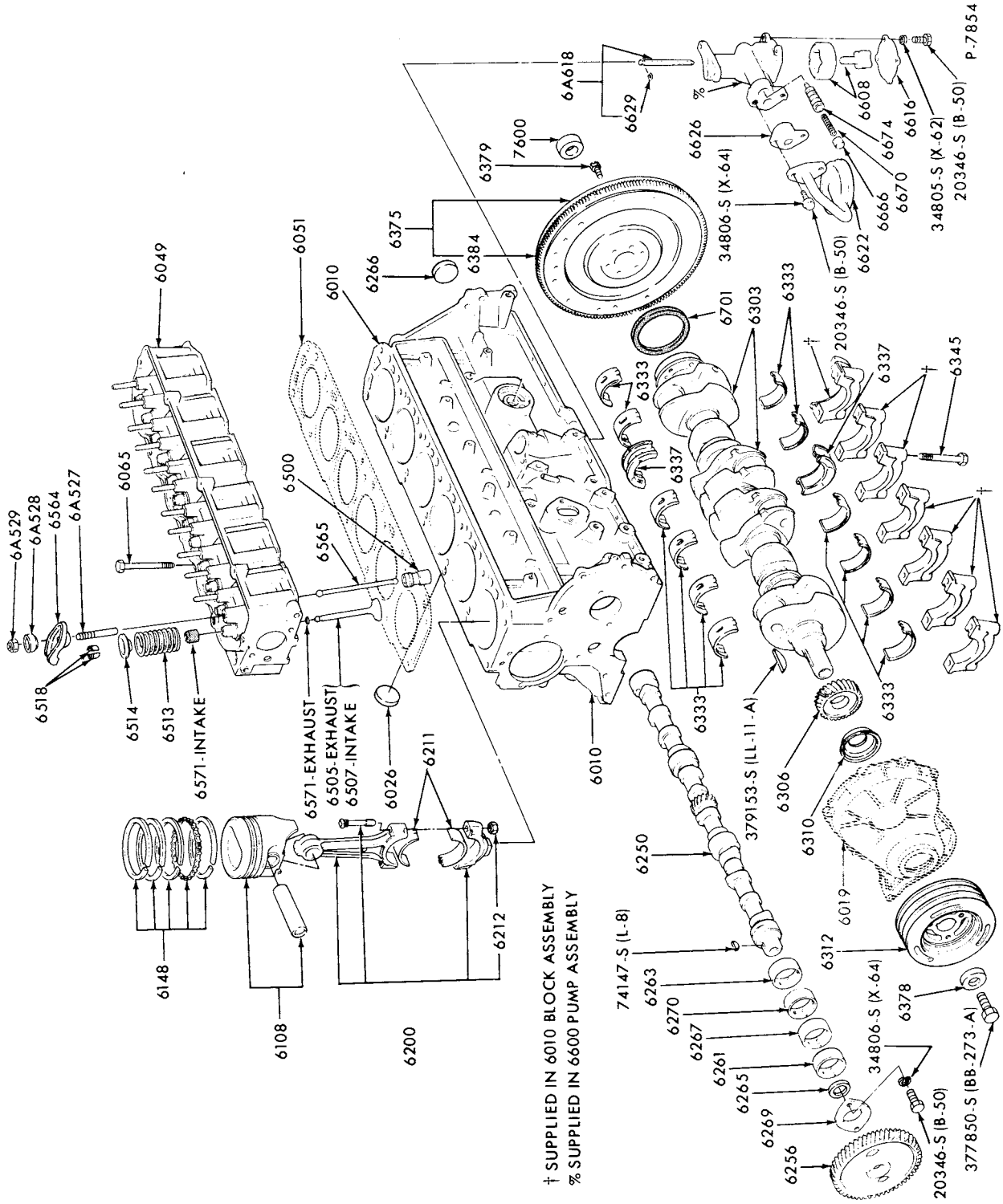

CYLINDER BLOCK and RELATED PARTS (INTERNAL)
1973/ 6 CYL. 240 and 300

COPYRIGHT © 1979 FORD MOTOR COMPANY · DEARBORN, MICHIGAN

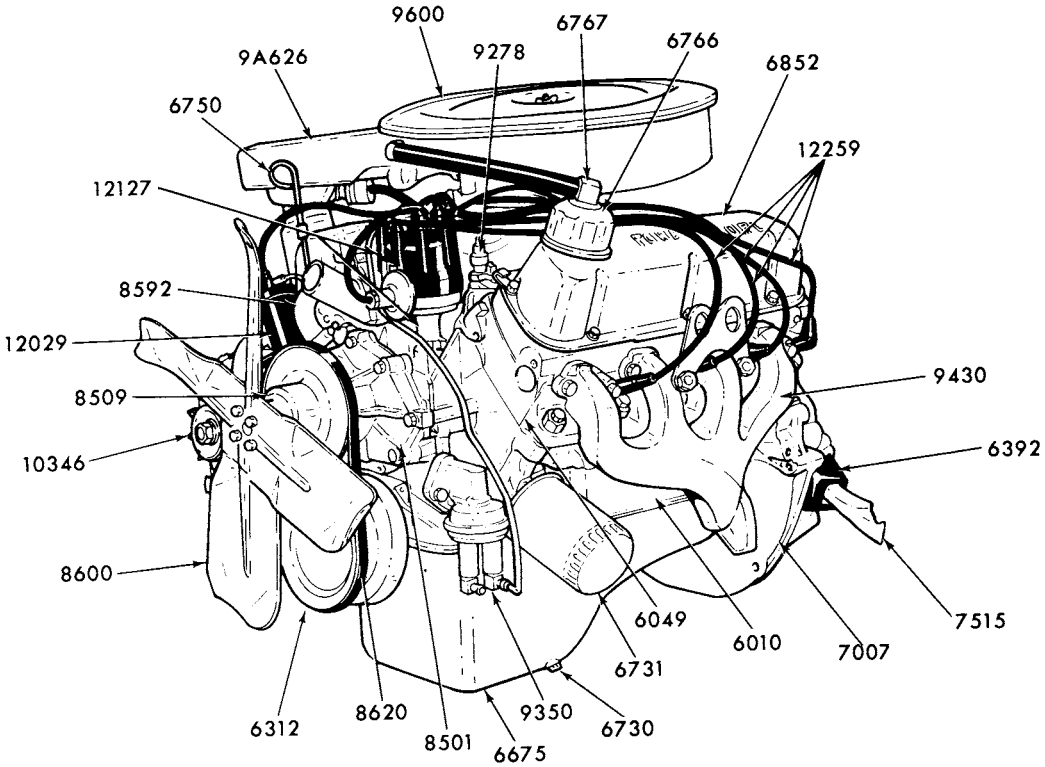

LEFT FRONT VIEW

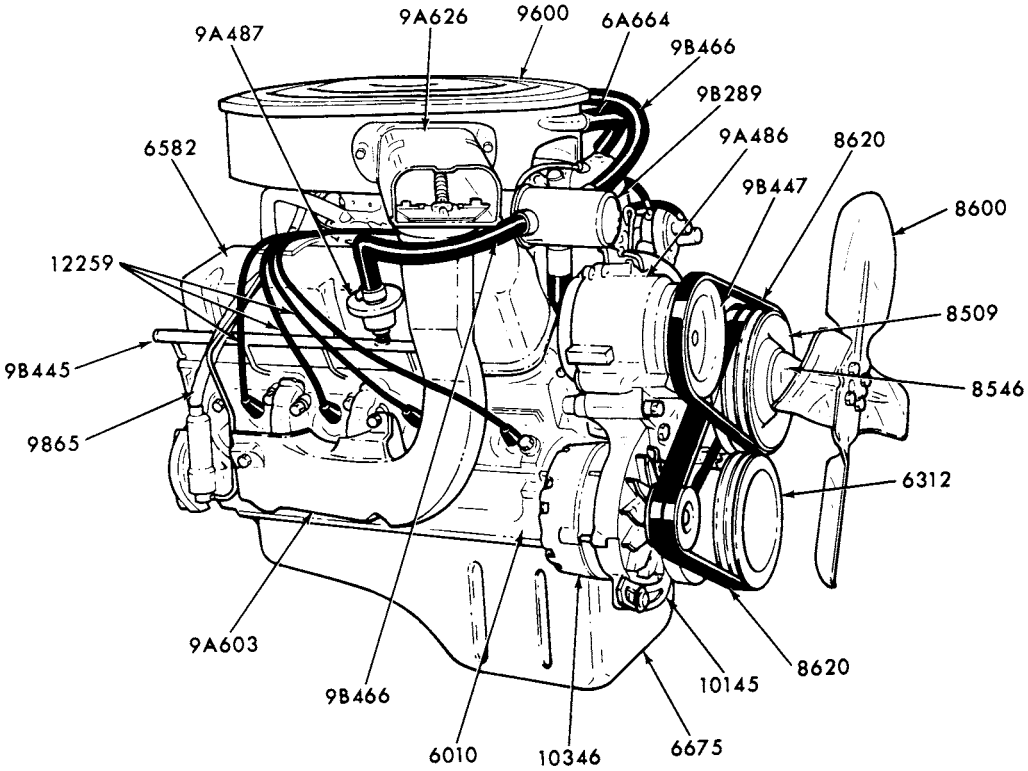

P-8372

ENGINE ASSY.-TYPICAL
1973/ 8 CYL. 302, 351 and 400

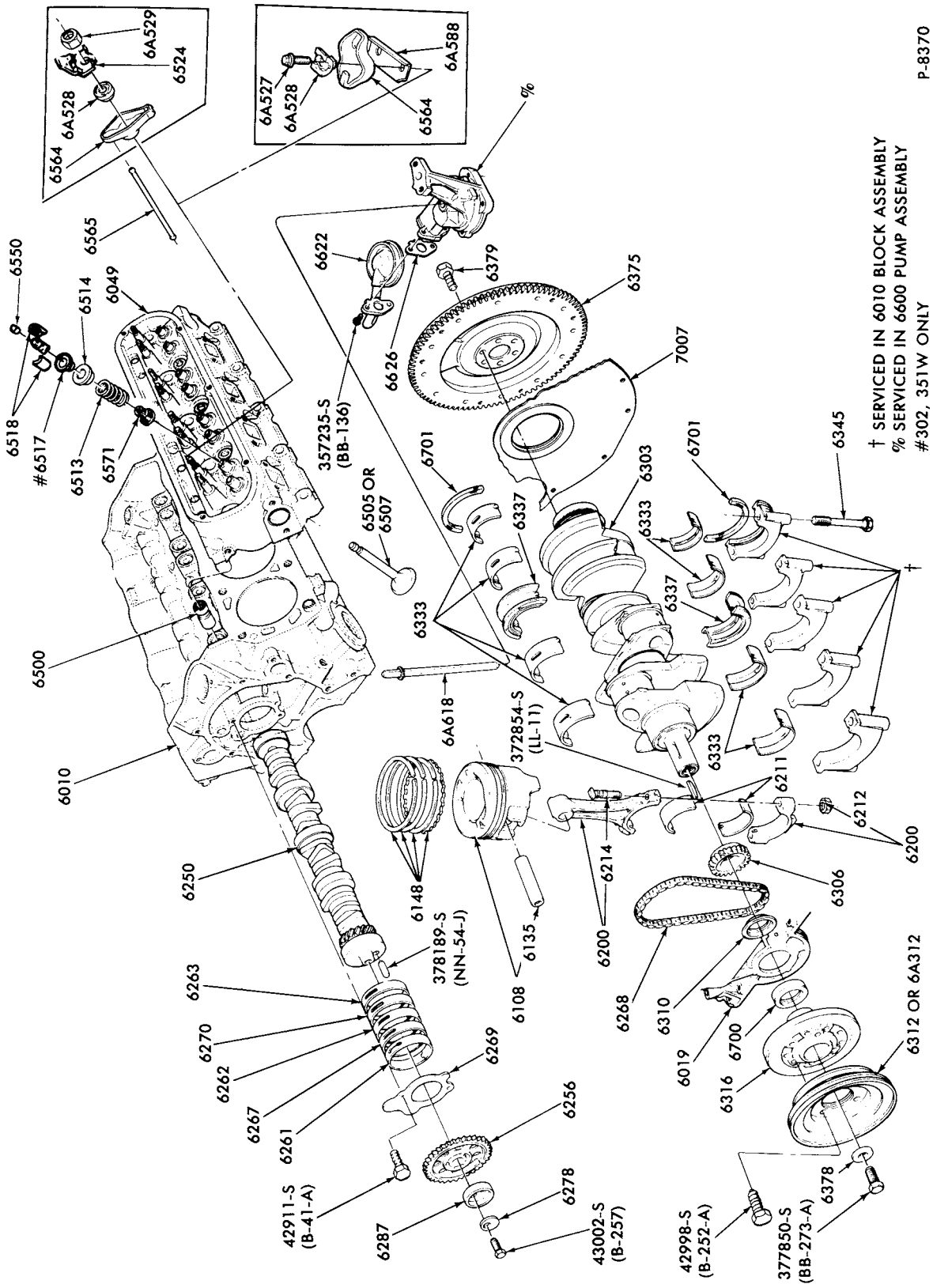

CYLINDER BLOCK and RELATED PARTS (INTERNAL)
1973/ 8 CYL. 302, 351W and 460

COPYRIGHT © 1979 FORD MOTOR COMPANY, DEARBORN, MICHIGAN

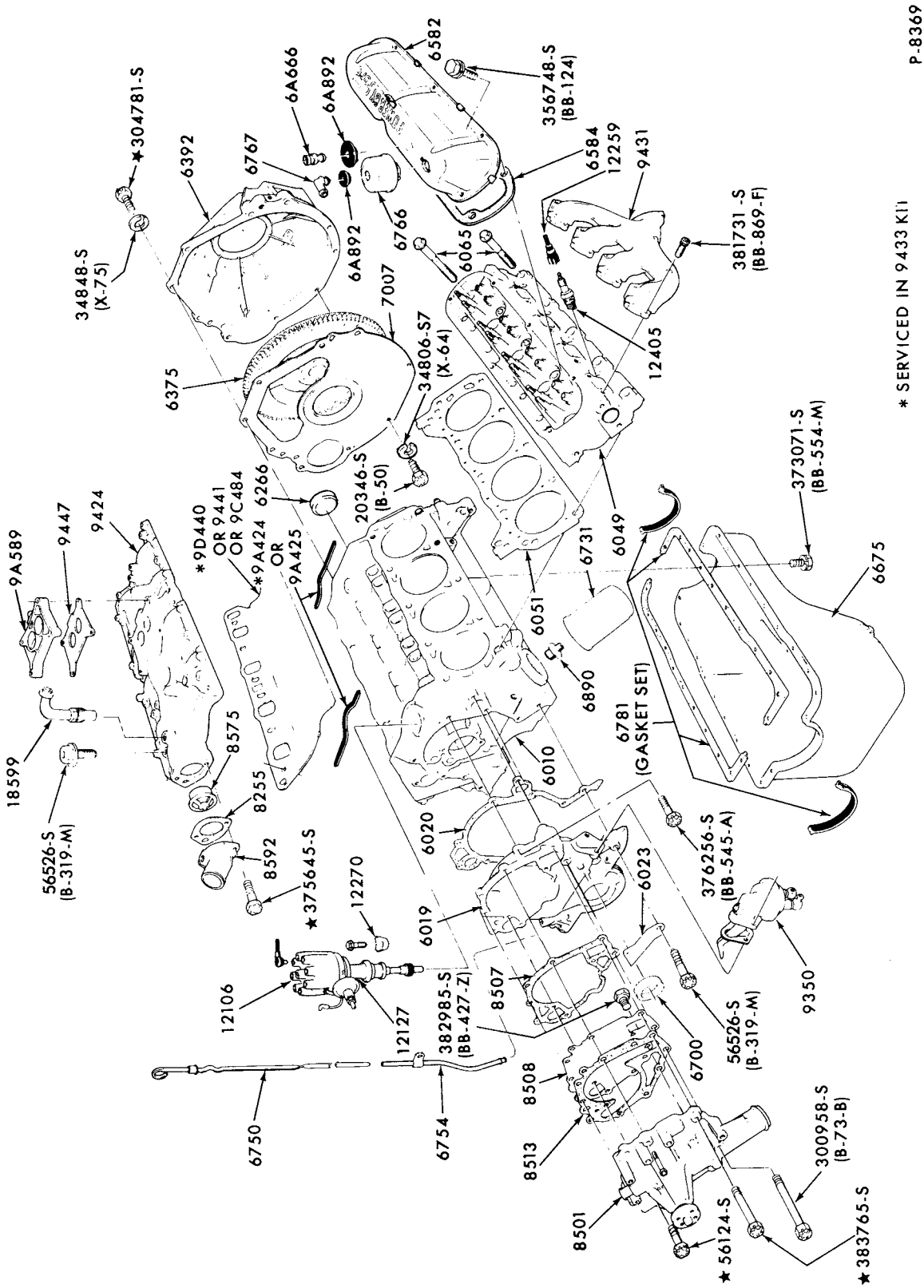

CYLINDER BLOCK and RELATED PARTS (EXTERNAL)
1973/ 8 CYL. 302, 351W and 460

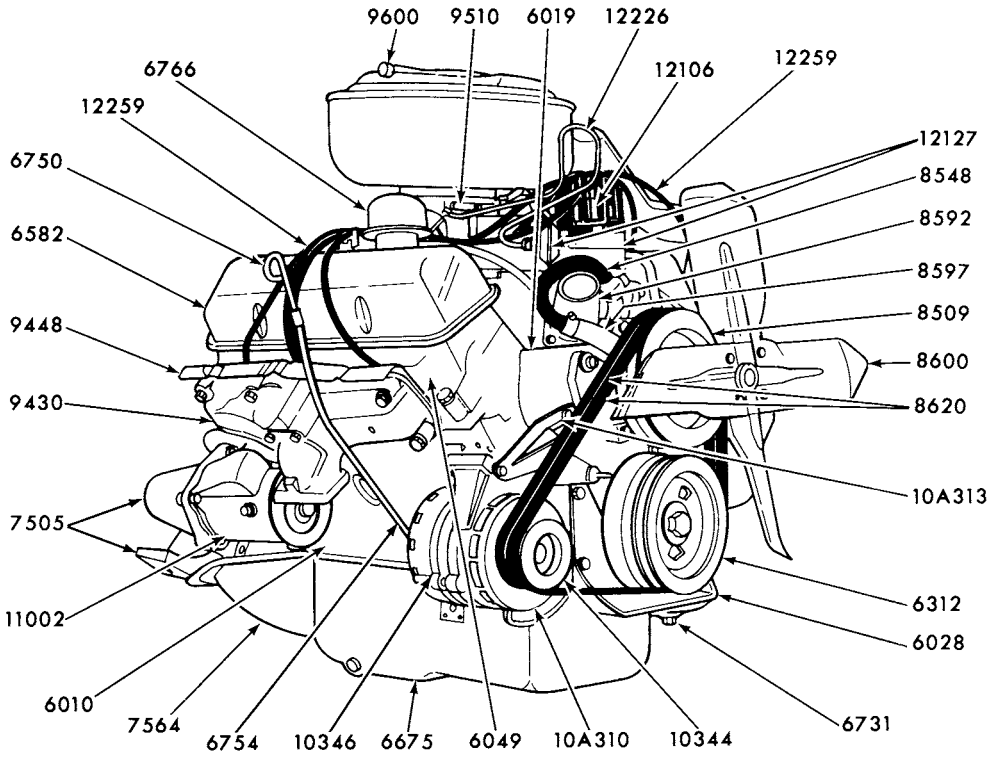

RIGHT-FRONT VIEW
(STANDARD MOUNT FAN)

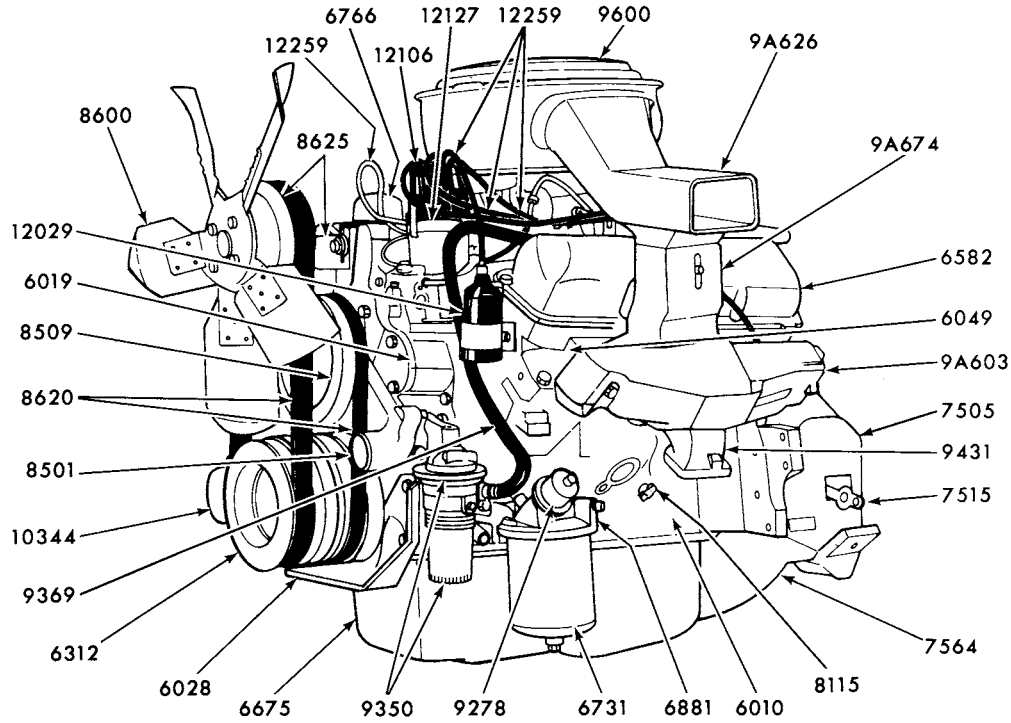

LEFT-FRONT VIEW (HIGH MOUNT FAN)

P-8402

ENGINE ASSY.-TYPICAL
1973/77 8 CYL. 330M/D

COPYRIGHT © 1979 — FORD MOTOR COMPANY — DEARBORN, MICHIGAN

1973/79 TRUCK SERIES 100/500

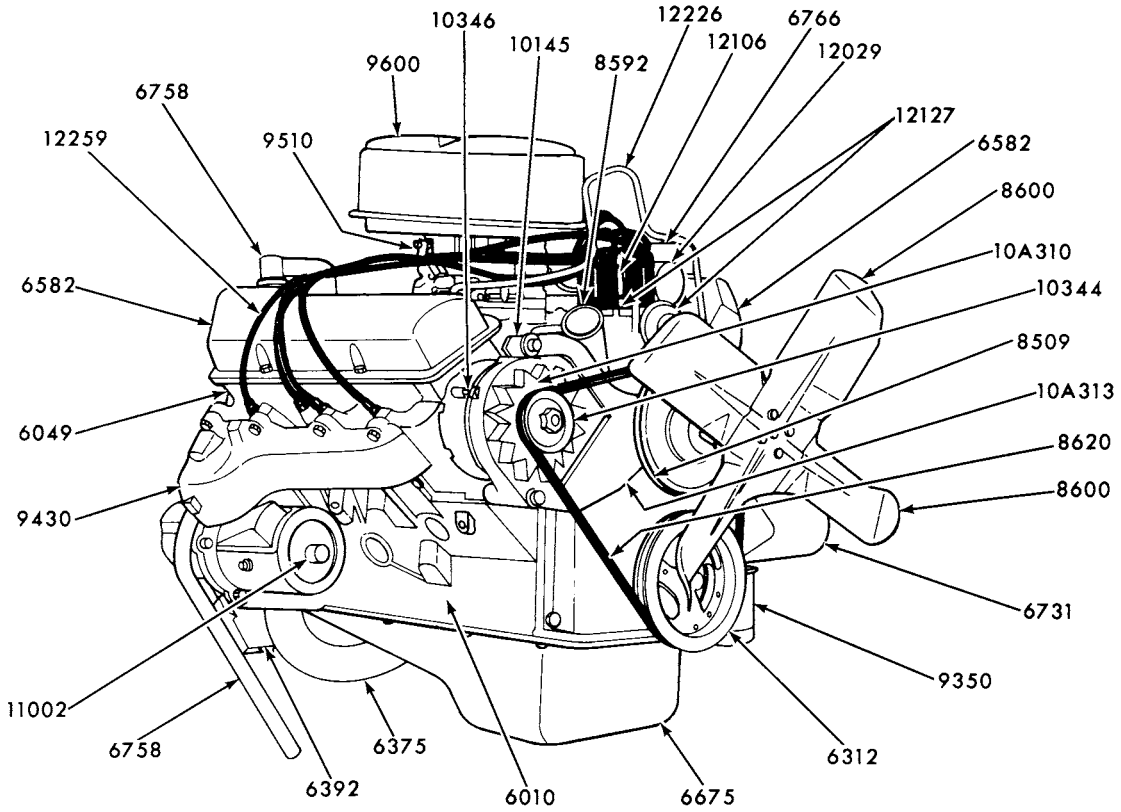

RIGHT-FRONT VIEW

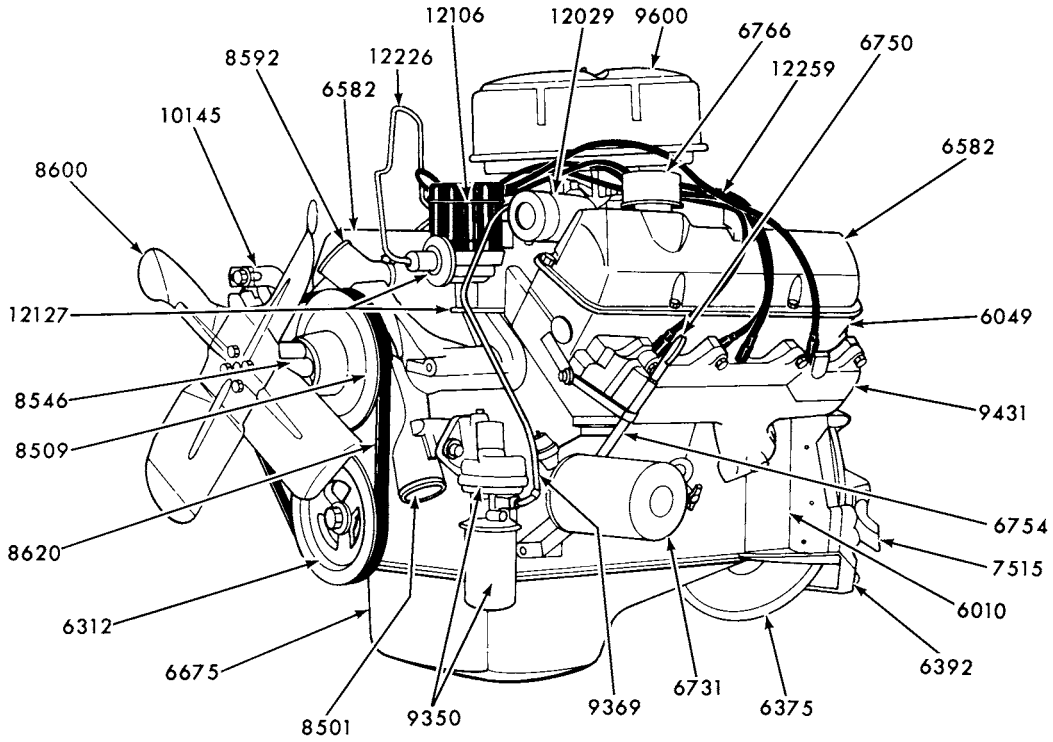

LEFT-FRONT VIEW

P-8401

ENGINE ASSY.-TYPICAL
1973/76 8 CYL. 360 and 390

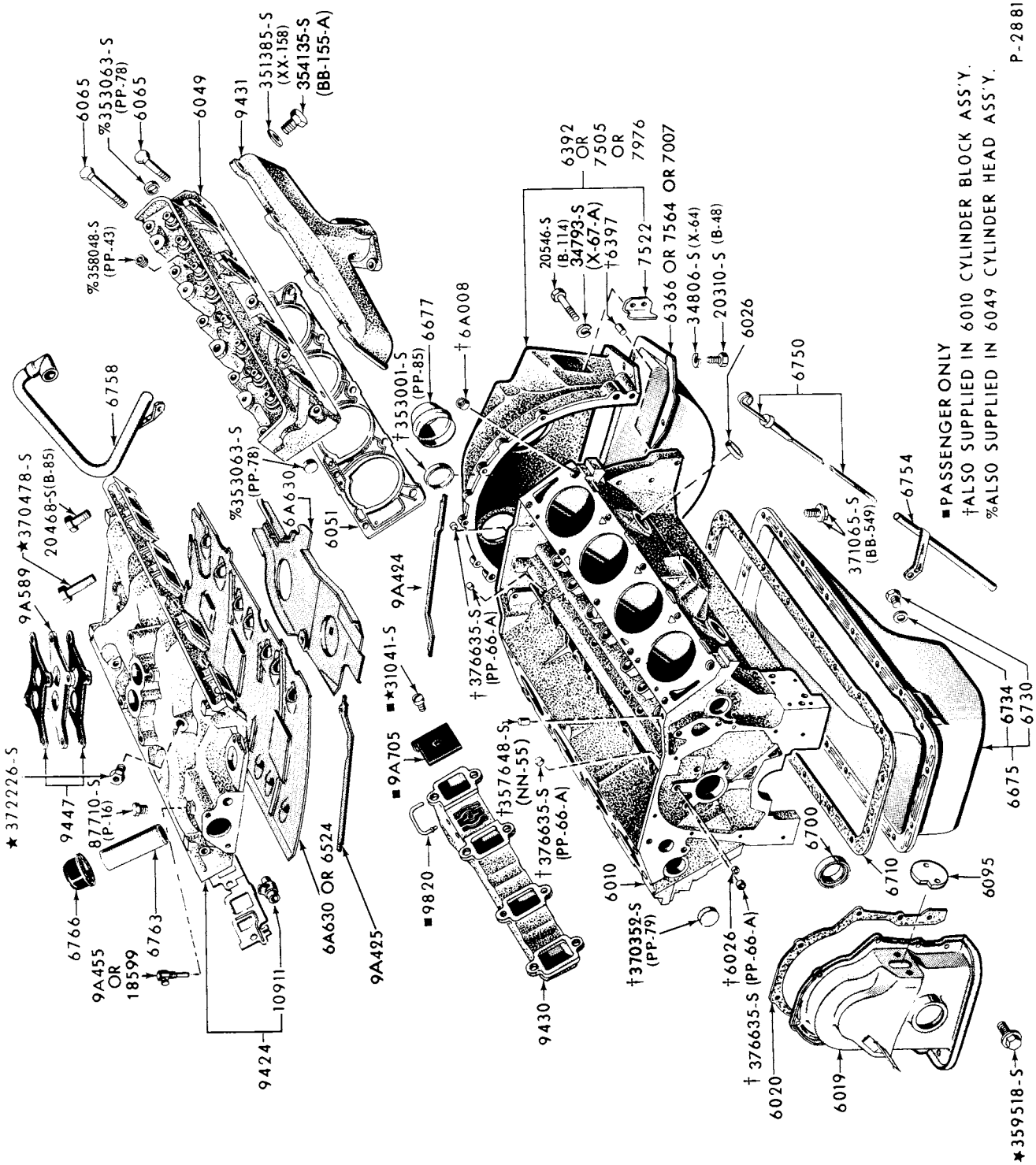

CYLINDER BLOCK and RELATED PARTS-TYPICAL
1973/77 8 CYL. 330M/D, 360 and 390

COPYRIGHT © 1979 FORD MOTOR COMPANY DEARBORN, MICHIGAN

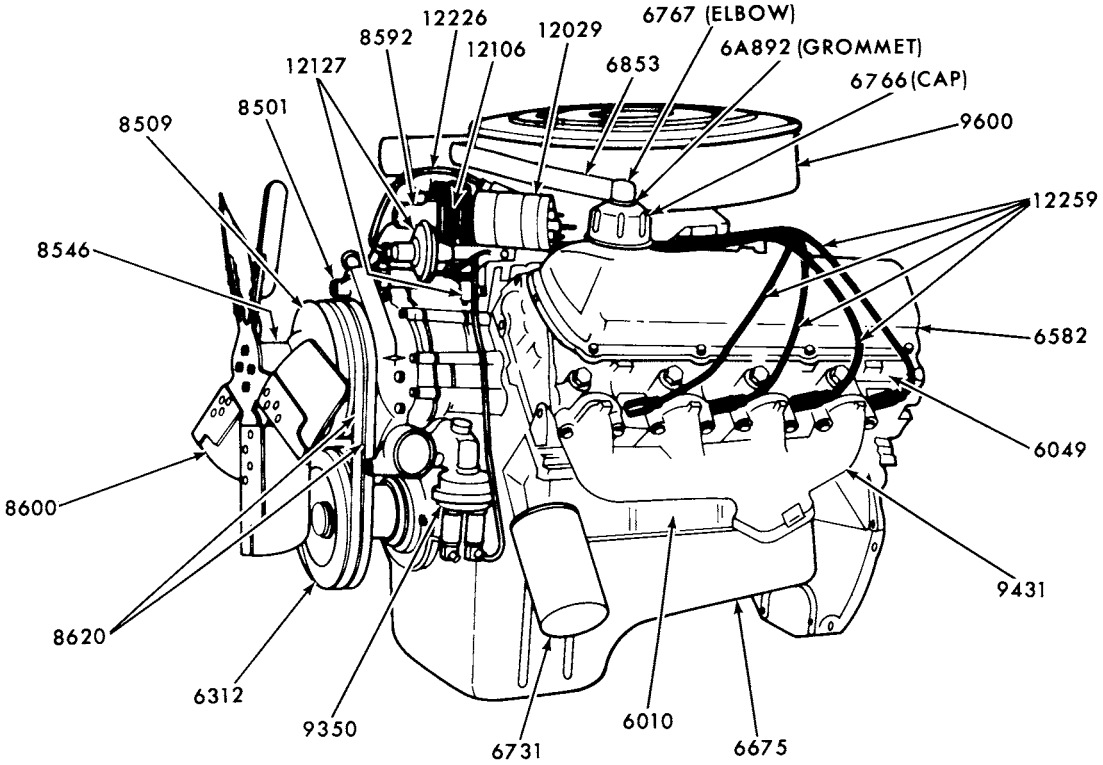

LEFT-FRONT VIEW

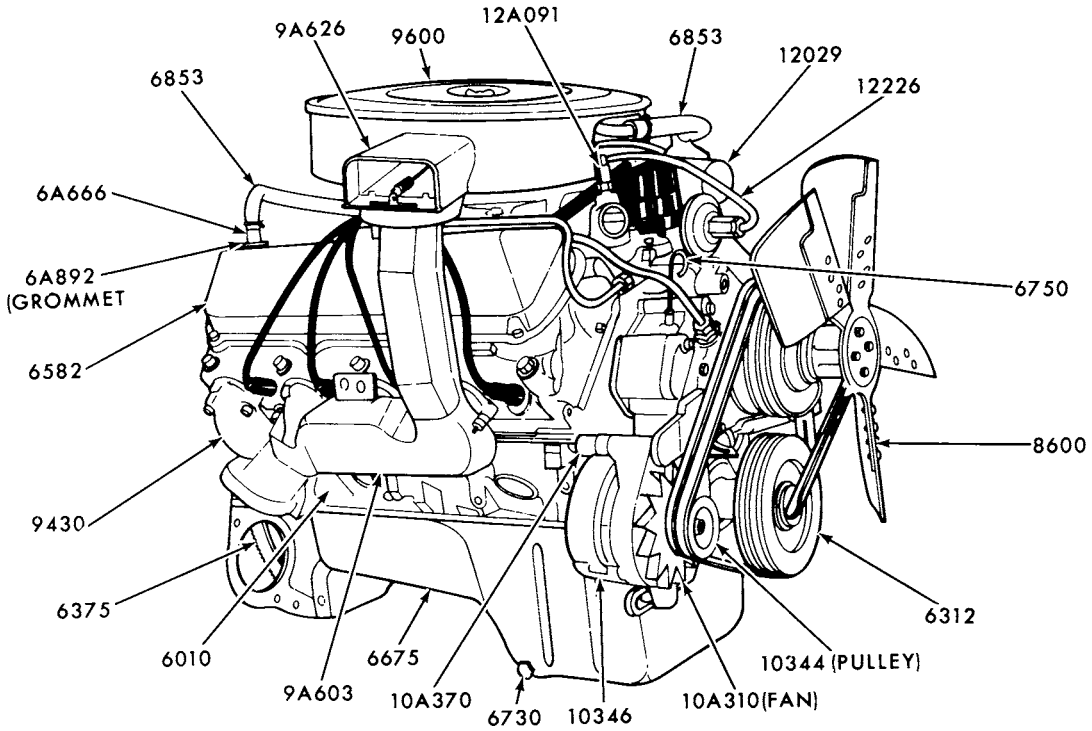

RIGHT-FRONT VIEW

P-8403

ENGINE ASSY.-TYPICAL
1973/ 8 CYL. 460

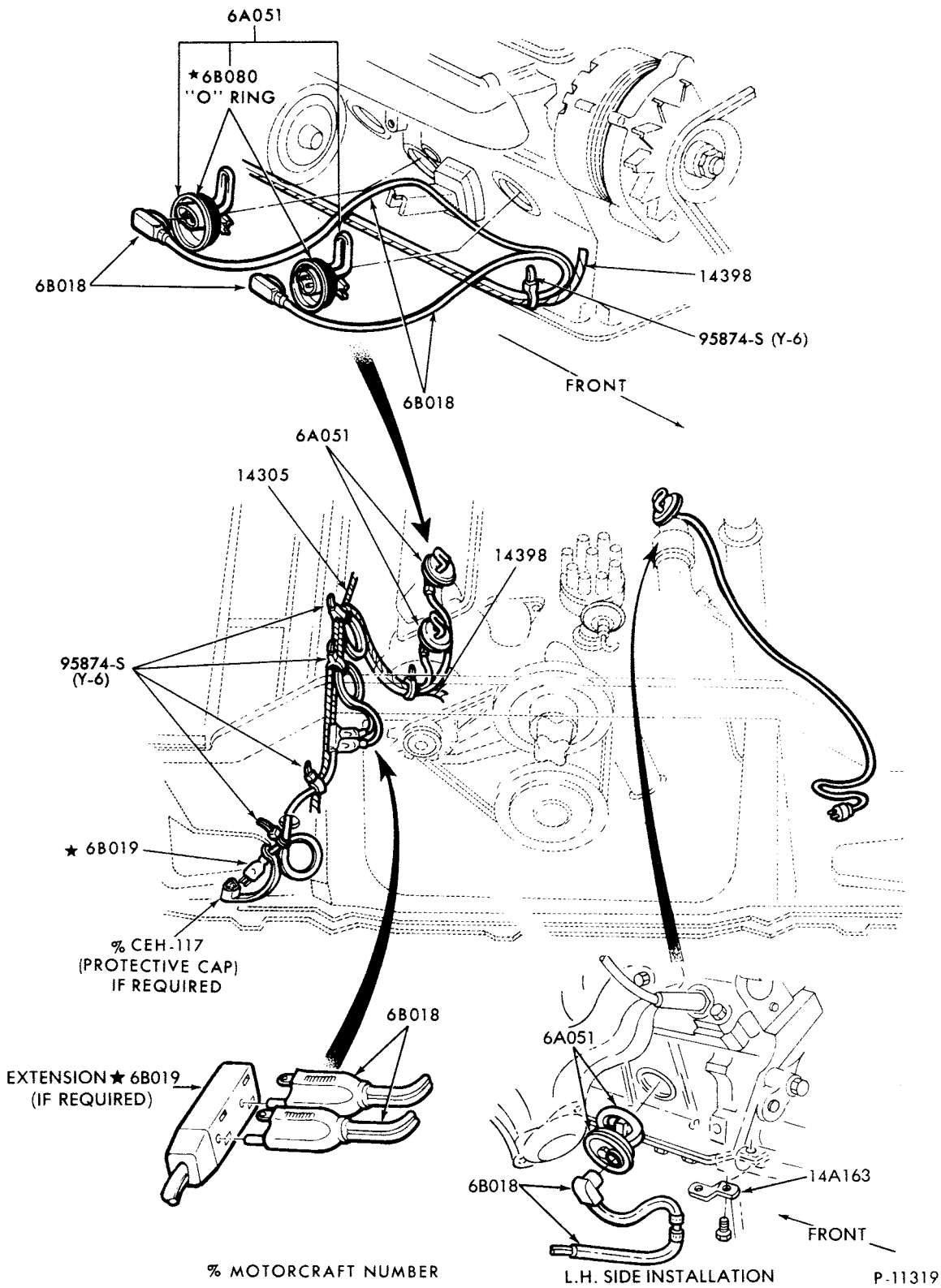

ENGINE BLOCK IMMERSION HEATER-TYPICAL
1973/ 6 CYL. and 8 CYL.

COPYRIGHT © 1980 FORD MOTOR COMPANY, DEARBORN, MICHIGAN

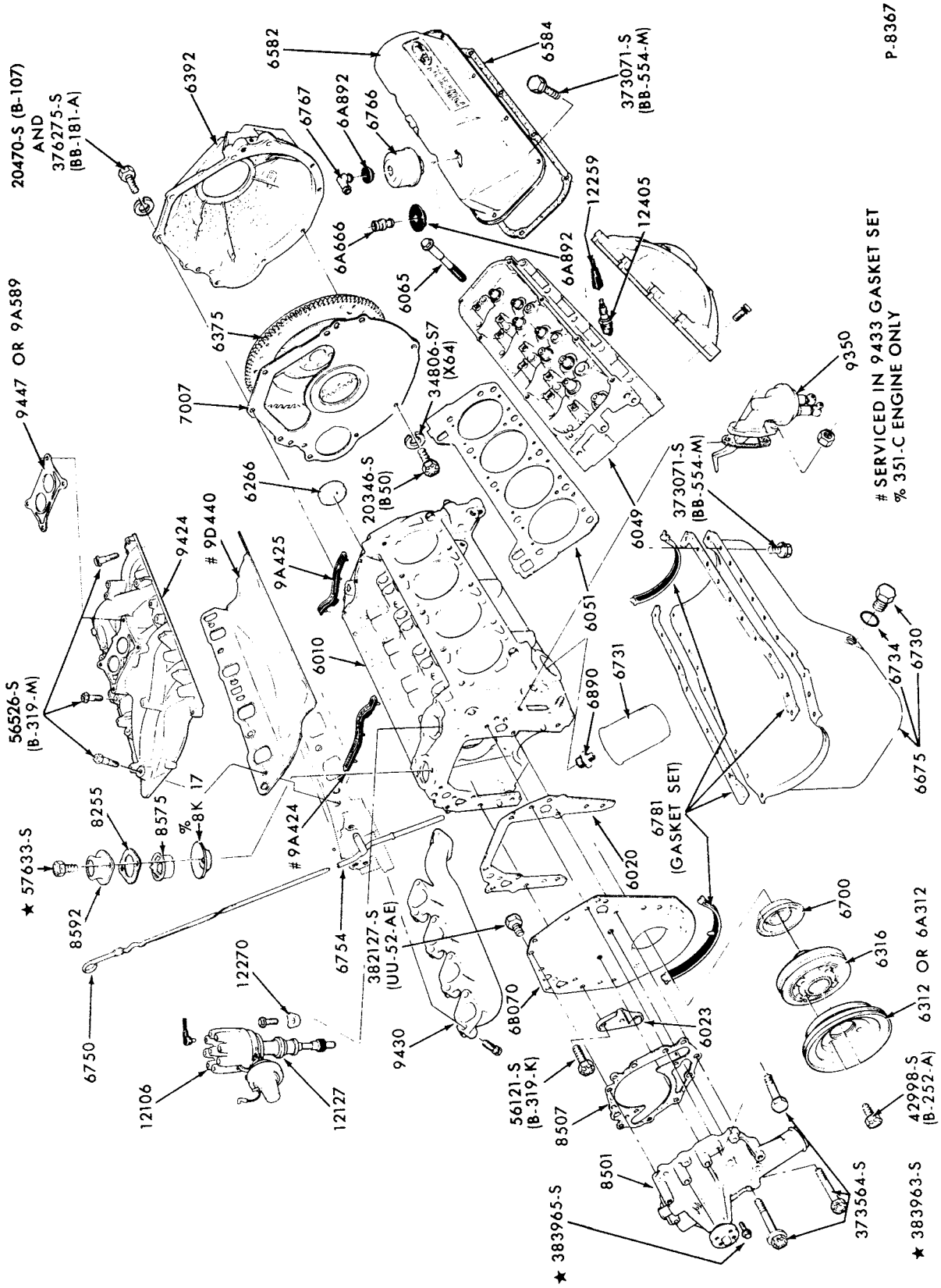

CYLINDER BLOCK and RELATED PARTS (EXTERNAL)-TYPICAL
1977/ 8 CYL. 351M and 400

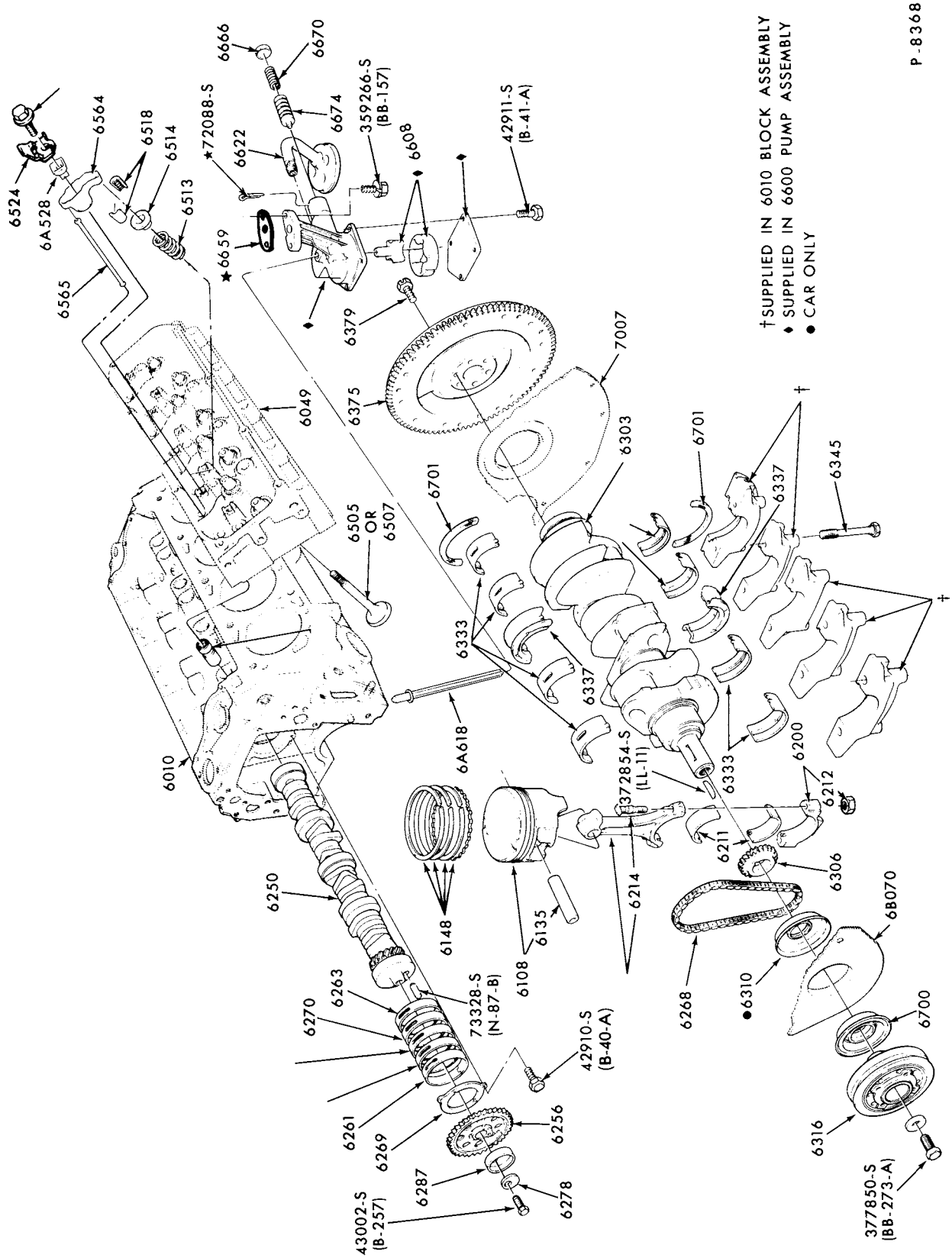

CYLINDER BLOCK and RELATED PARTS (INTERNAL)-TYPICAL
1977/ 8 CYL. 351M and 400

COPYRIGHT © 1979 FORD MOTOR-DEARBORN, MICHIGAN COMPANY

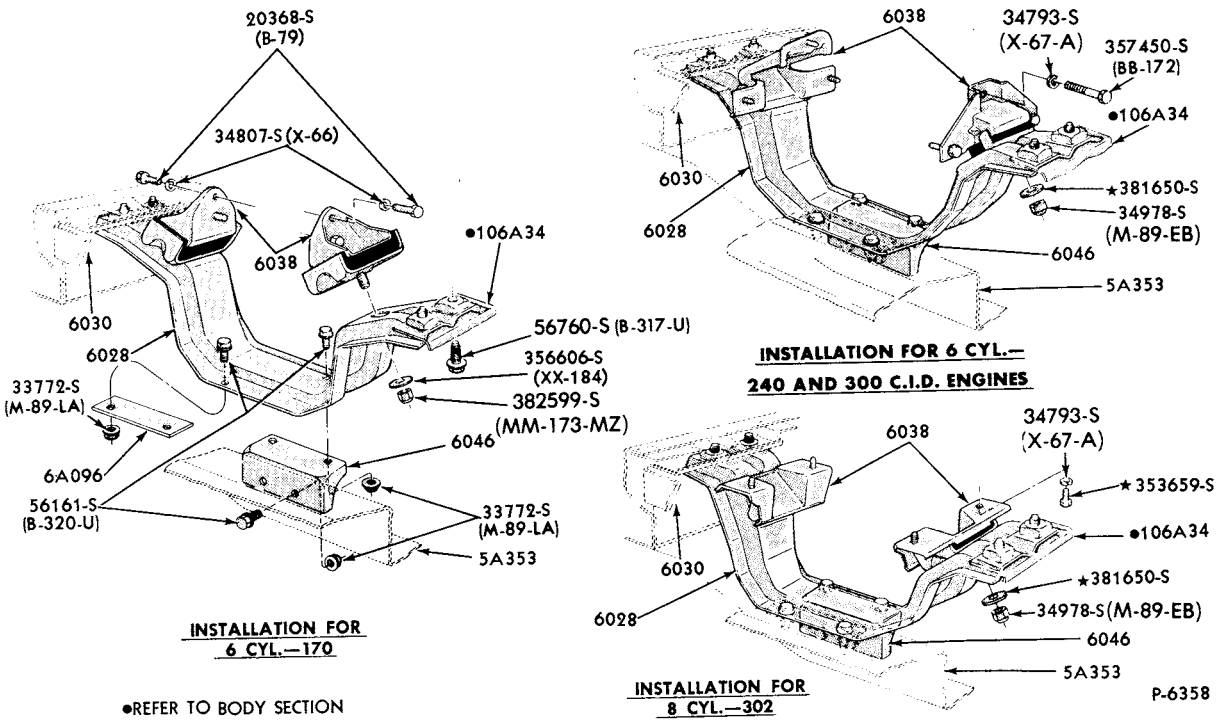

ENGINE SUPPORTS, INSULATORS and RELATED PARTS (FRONT)-TYPICAL
1973/74 E100/300

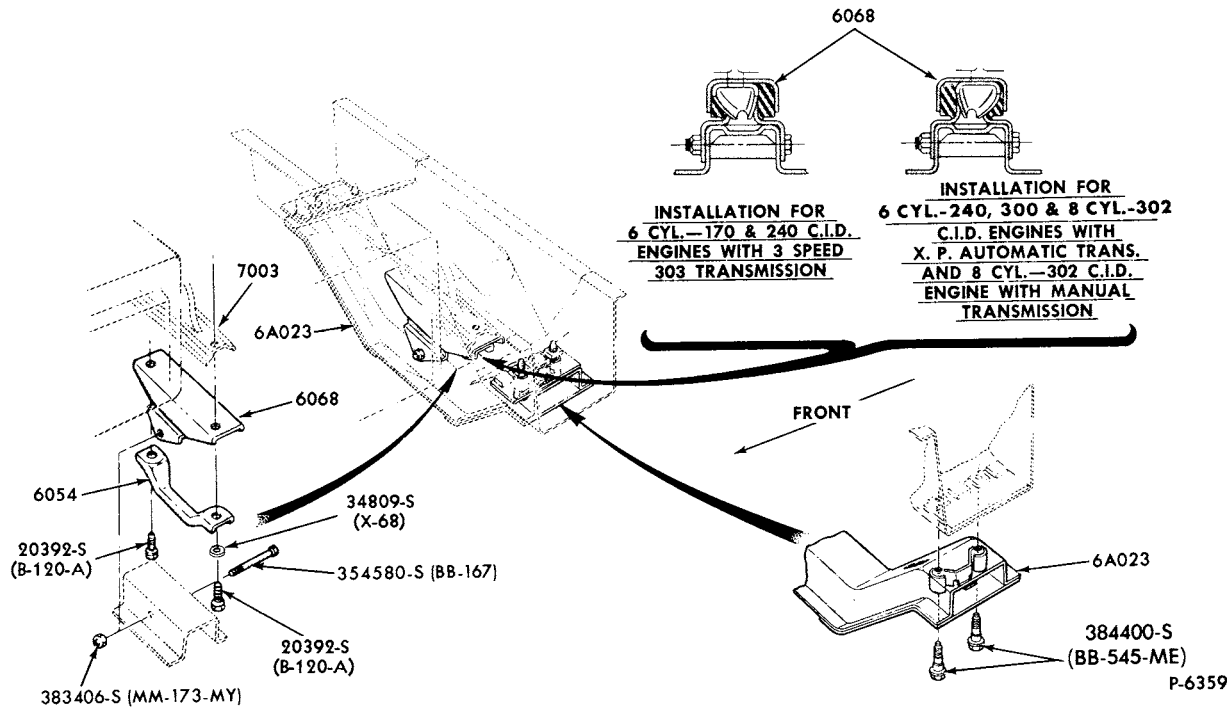

ENGINE SUPPORTS, INSULATORS and RELATED PARTS (REAR)-TYPICAL
1973/74 E100/300

COPYRIGHT © 1979 FORD MOTOR COMPANY, DEARBORN, MICHIGAN

1973/79 TRUCK SERIES 100/500

P-5267

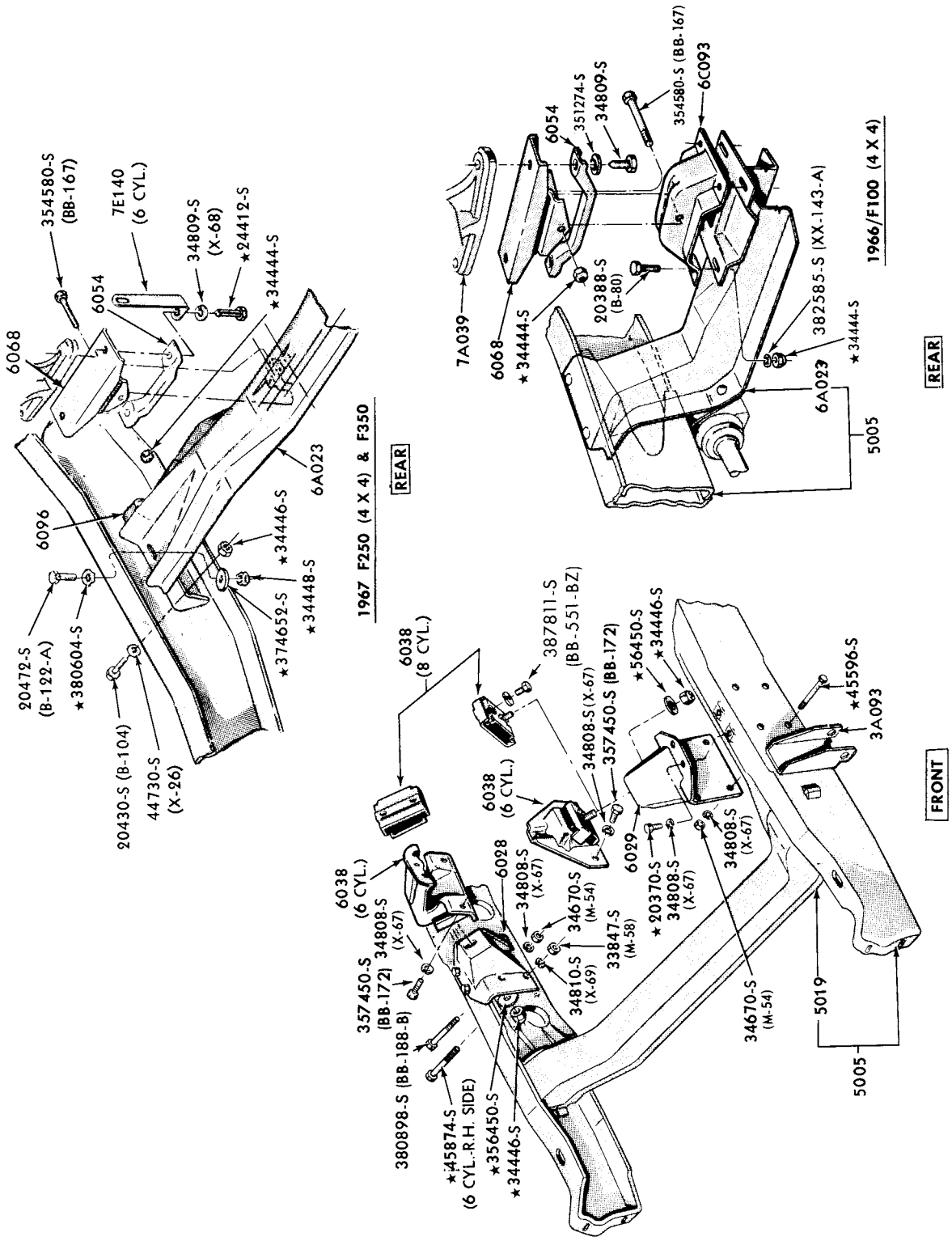

ENGINE SUPPORTS, INSULATORS and RELATED PARTS (FRONT and REAR)-TYPICAL
1973/76 F100/250--4/W/D and 6 CYL. 240, 300
1973/74 F100--4/W/D and 8 CYL. 360 - "Before Ser. T20,001"
1973/76 F250--4/W/D and 8 CYL. 360

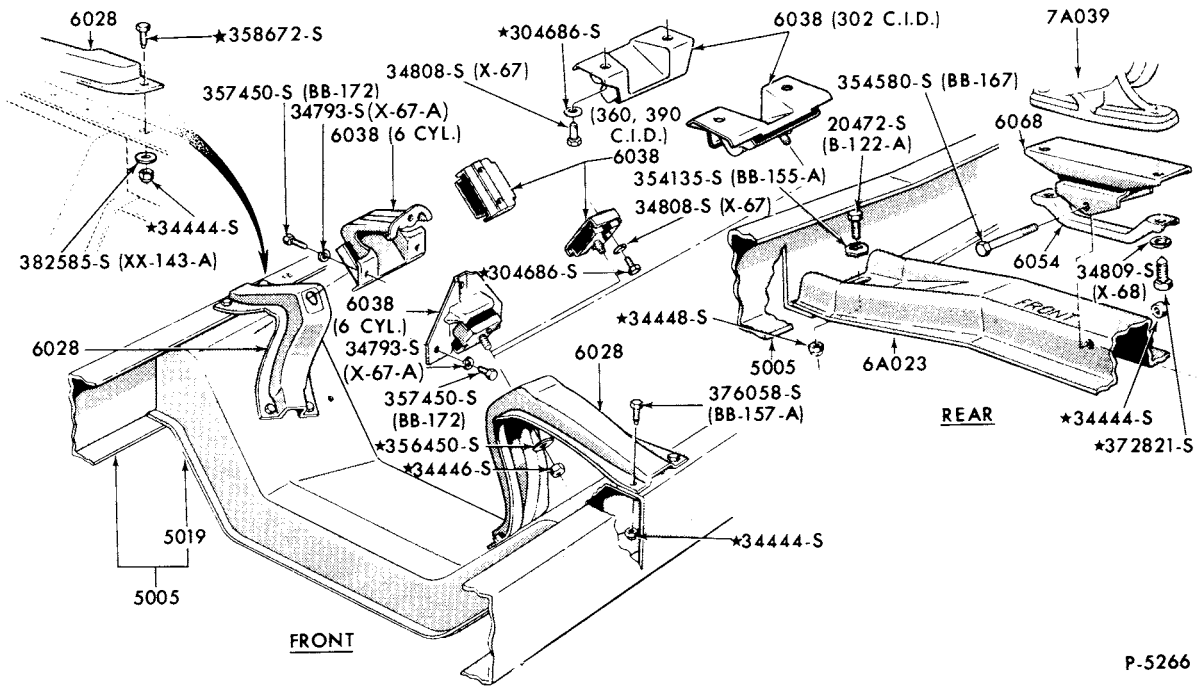

ENGINE SUPPORTS, INSULATORS and RELATED PARTS (FRONT and REAR)-TYPICAL
1973/76 F100/350--2/W/D-6 CYL. 240, 300, 8 CYL. 302, 360 and 390

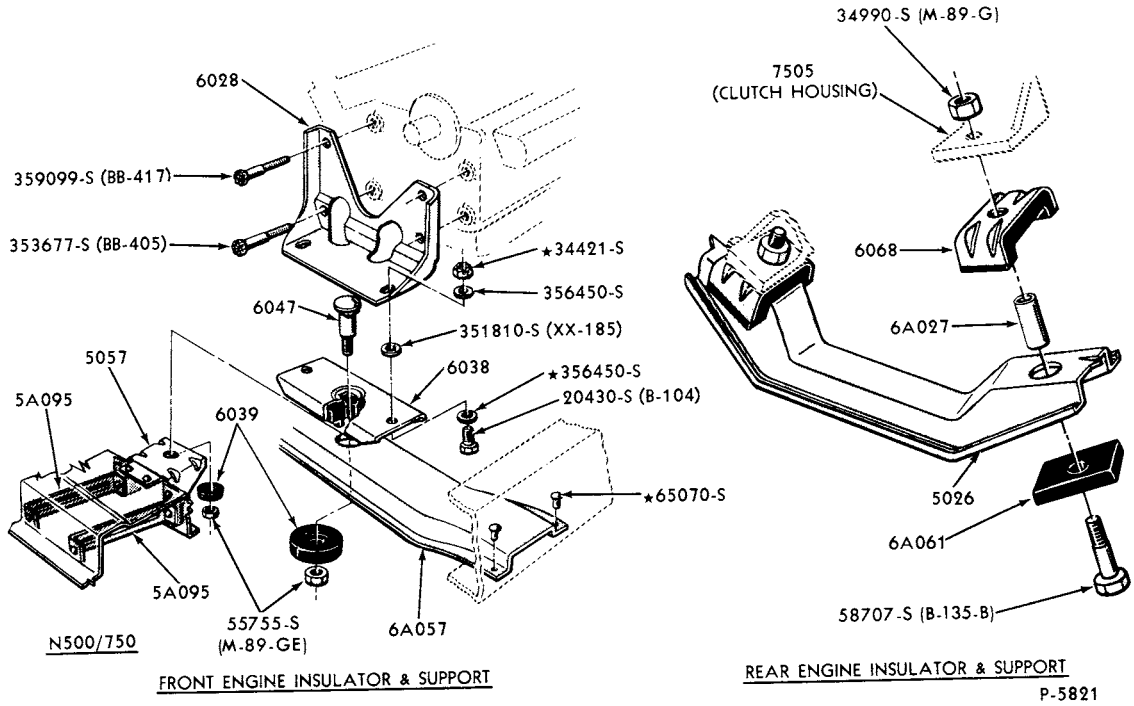

COPYRIGHT © 1978

ENGINE SUPPORTS, INSULATORS and RELATED PARTS (FRONT and REAR)-TYPICAL
1973/77 B-F500--8 CYL. 330

COPYRIGHT © 1979 FORD MOTOR COMPANY—DEARBORN, MICHIGAN

1973/79 TRUCK SERIES 100/500

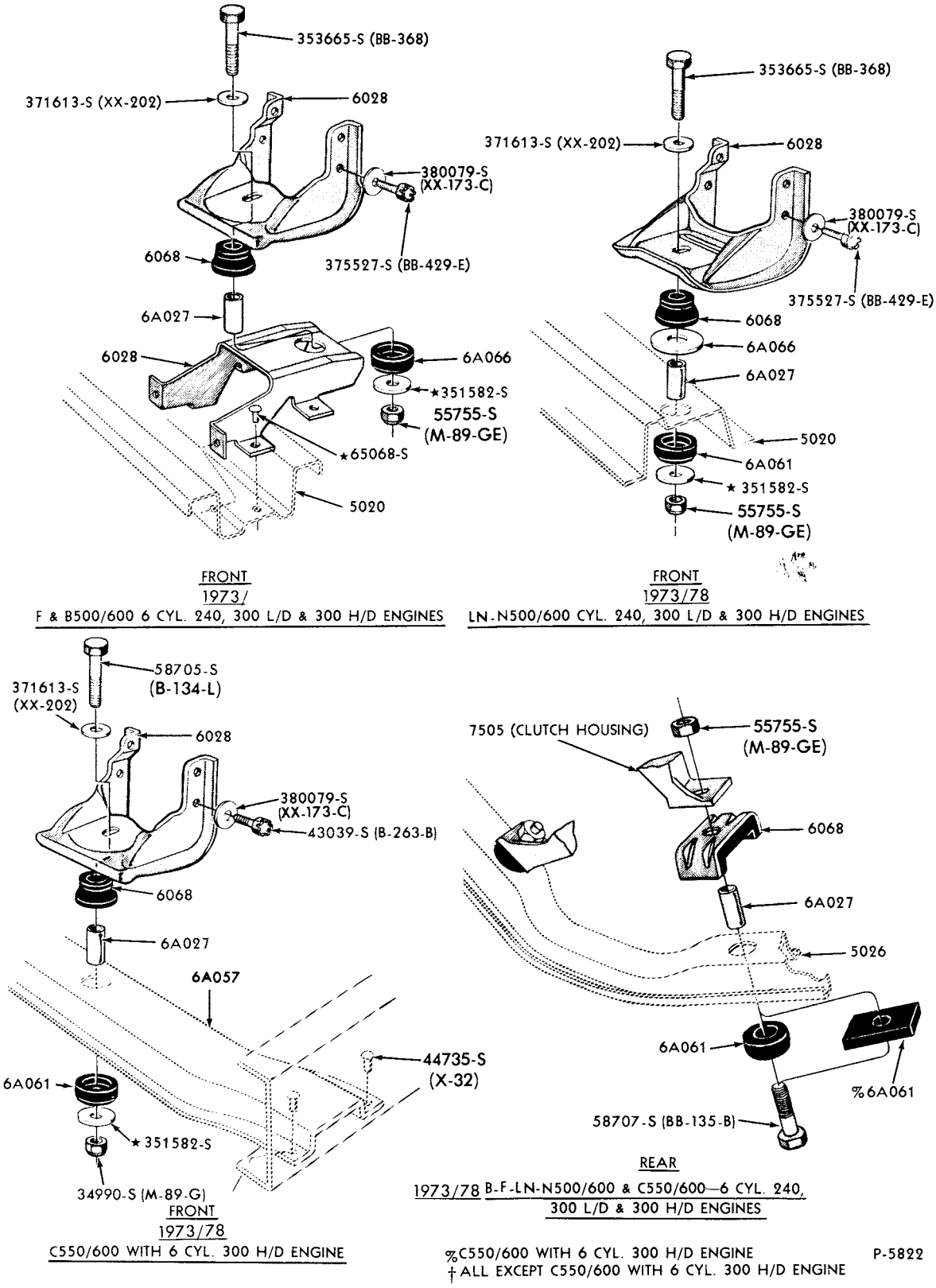

ENGINE SUPPORTS, INSULATORS and RELATED PARTS (FRONT and REAR)-TYPICAL
1973/77 B-F500--6 CYL.

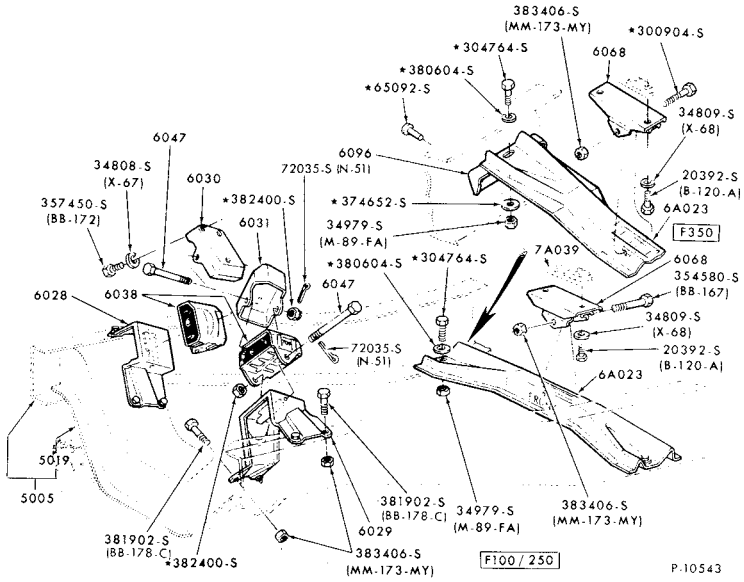

ENGINE SUPPORTS, INSULATORS and RELATED PARTS (FRONT and REAR)-TYPICAL
1973/ F100/350--8 CYL. 460

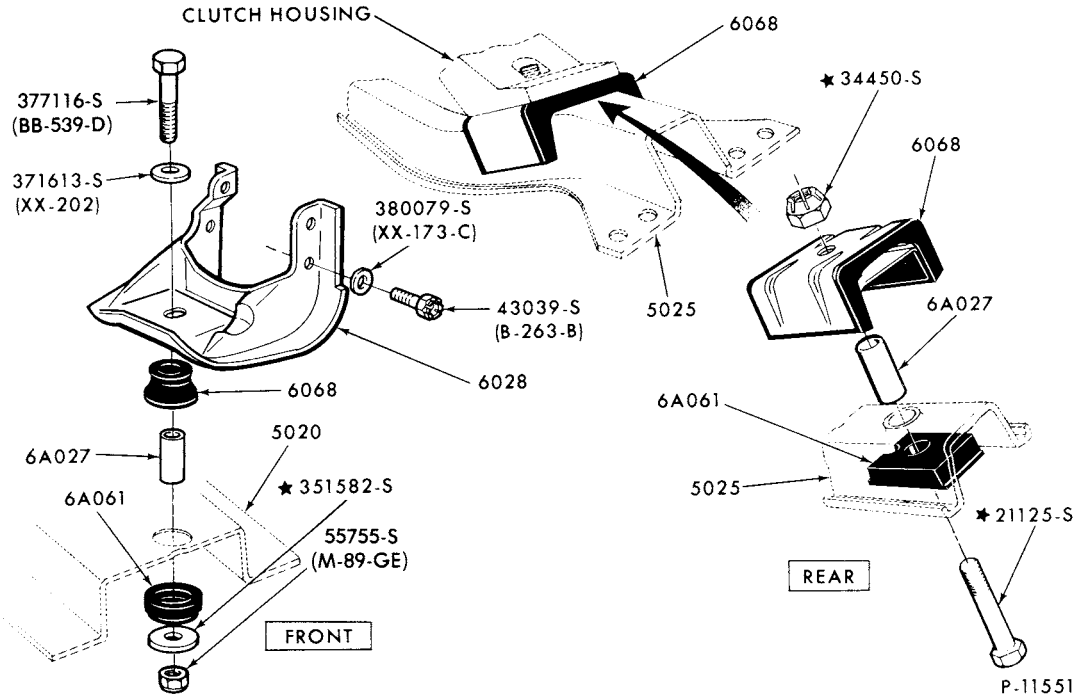

ENGINE SUPPORTS, INSULATORS and RELATED PARTS (FRONT and REAR)-TYPICAL
1973/77 P350/500--6 CYL.

COPYRIGHT © 1979 - FORD MOTOR COMPANY - DEARBORN, MICHIGAN

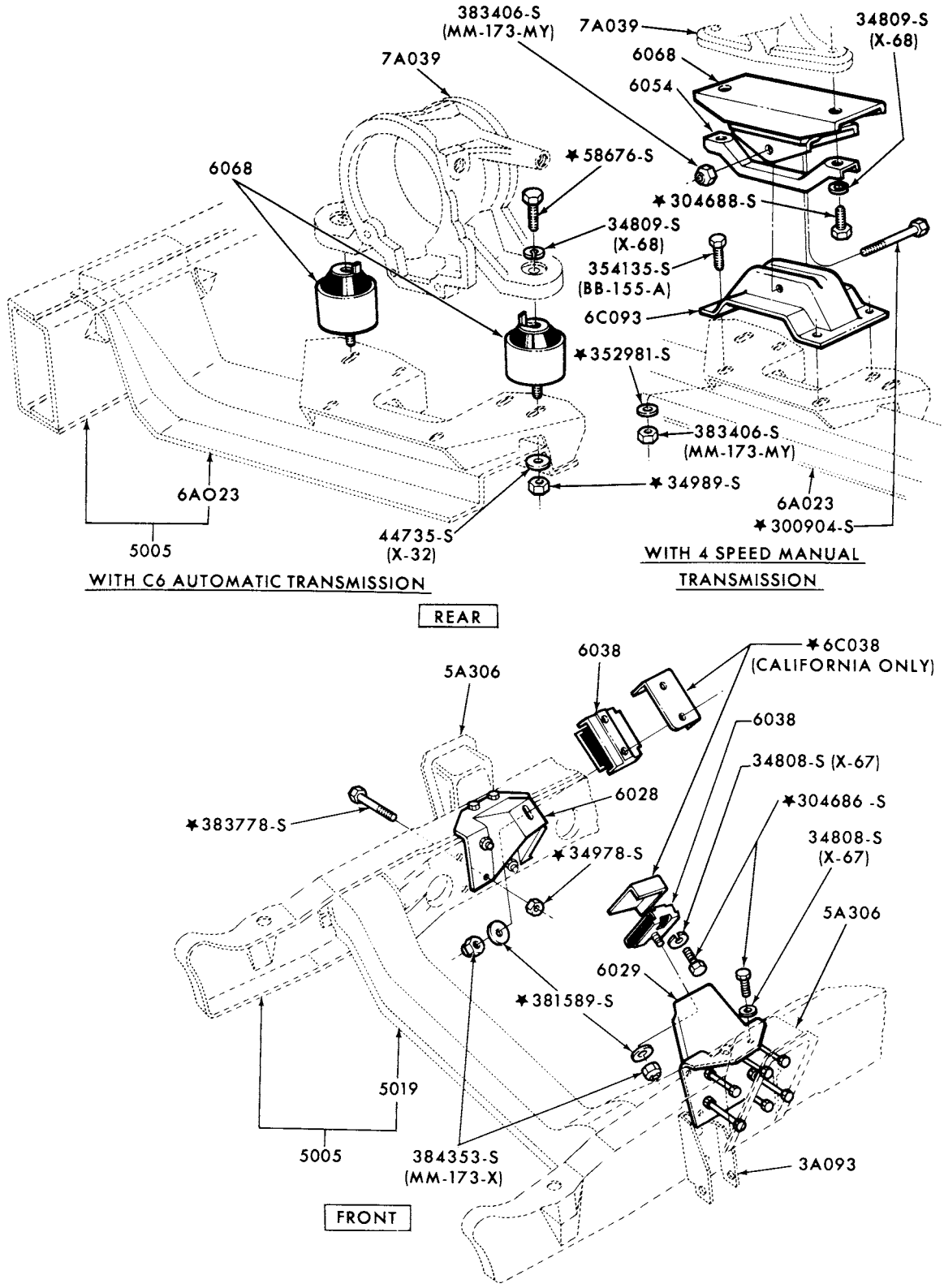

ENGINE SUPPORTS, INSULATORS and RELATED PARTS (FRONT and REAR)-TYPICAL
1974/76 F100/150--4/W/D and 8 CYL. 360 - "From Ser. T20,001"

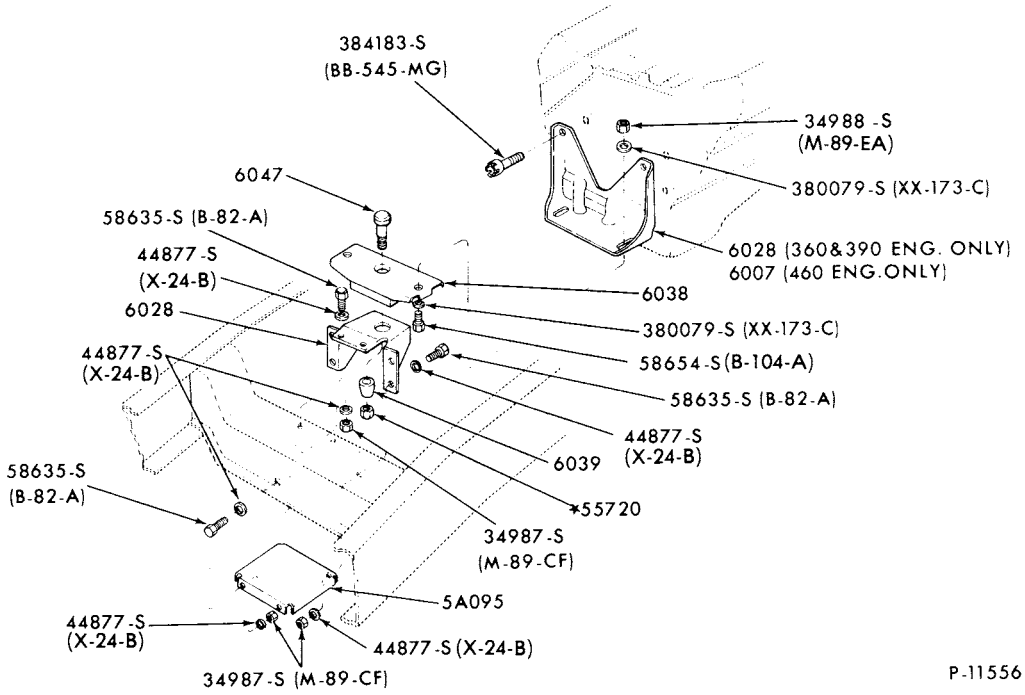

ENGINE SUPPORTS, INSULATORS and RELATED PARTS (FRONT)-TYPICAL
1973/76 M450/500--8 CYL. 360, 390 and 460

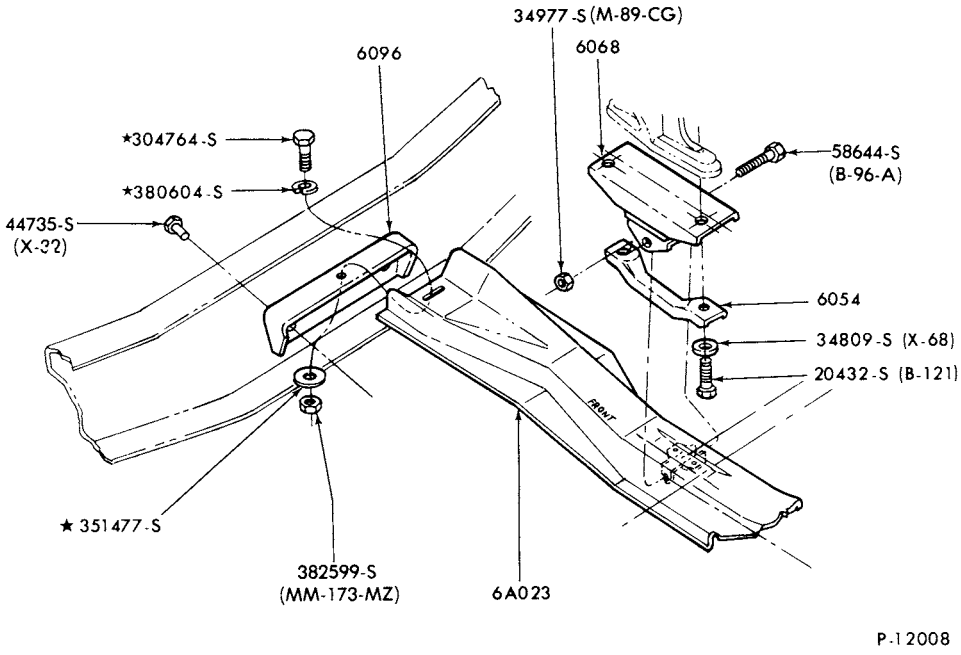

ENGINE SUPPORTS INSULATORS and RELATED PARTS (REAR)-TYPICAL
1973/76 M450/500--8 CYL. 360,390 and 460

COPYRIGHT © 1979 FORD MOTOR COMPANY, DEARBORN, MICHIGAN

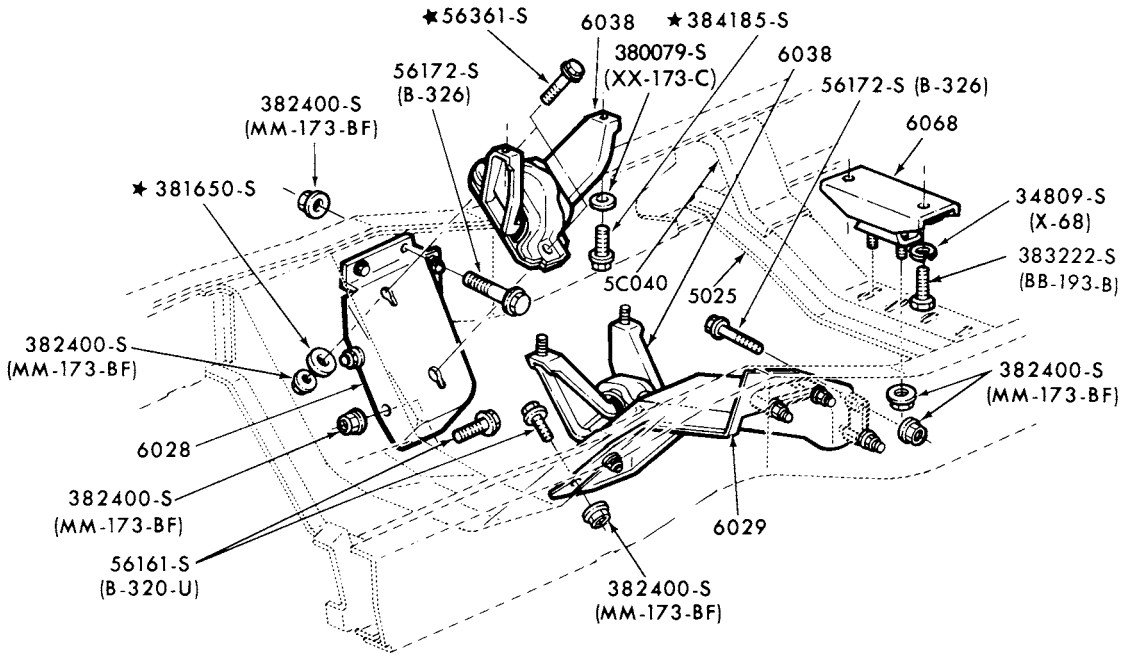

8 CYL. -302 AND 351 ENGINE

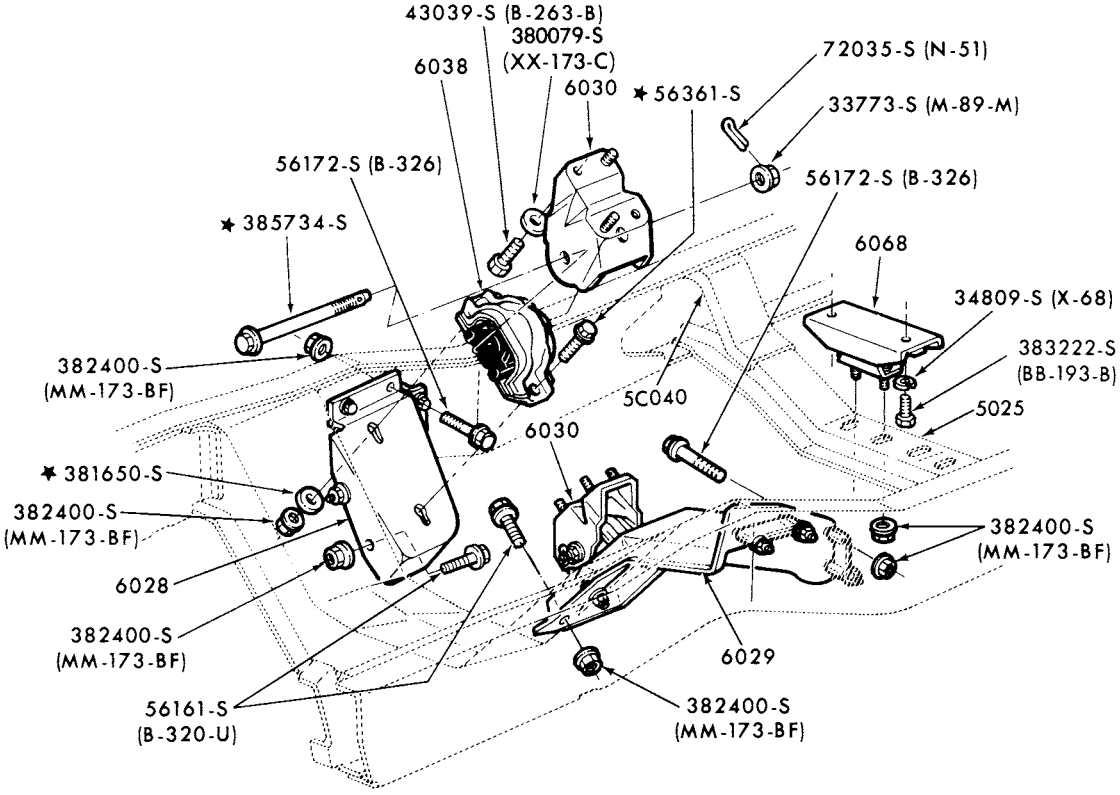

8 CYL. - 460 C.I.D. ENGINE

P-11552

ENGINE SUPPORTS, INSULATORS and RELATED PARTS (FRONT and REAR) - TYPICAL
1975/ E100/350--8 CYL. 302, 351 and 460

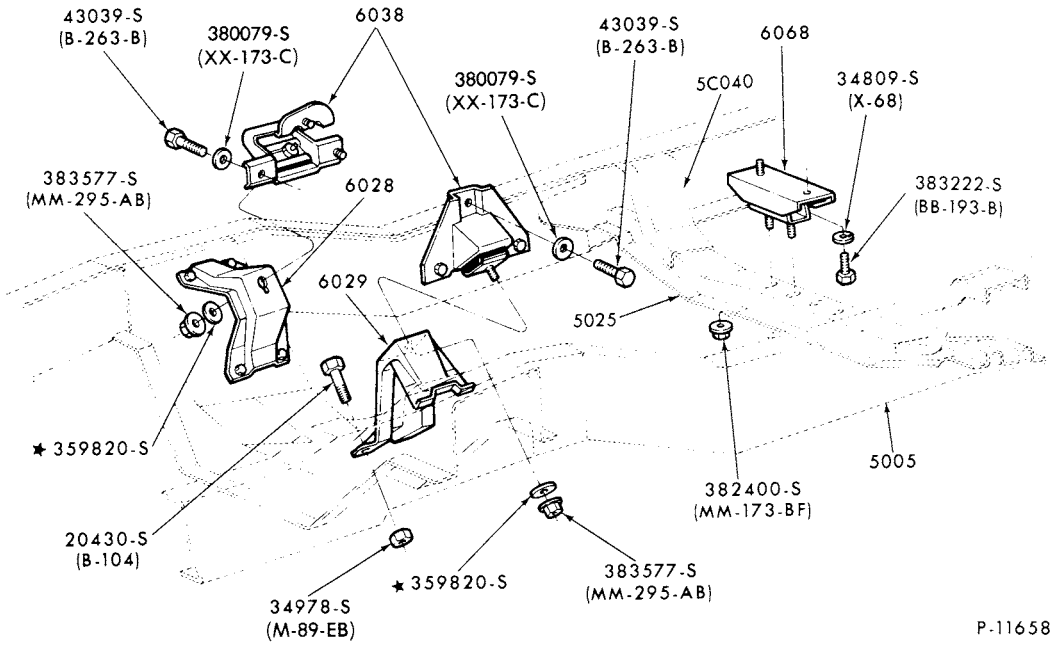

ENGINE SUPPORTS, INSULATORS and RELATED PARTS (FRONT and REAR) - TYPICAL
1975/ E100/350--6 CYL. 300

COPYRIGHT © 1979 FORD MOTOR COMPANY, DEARBORN, MICHIGAN

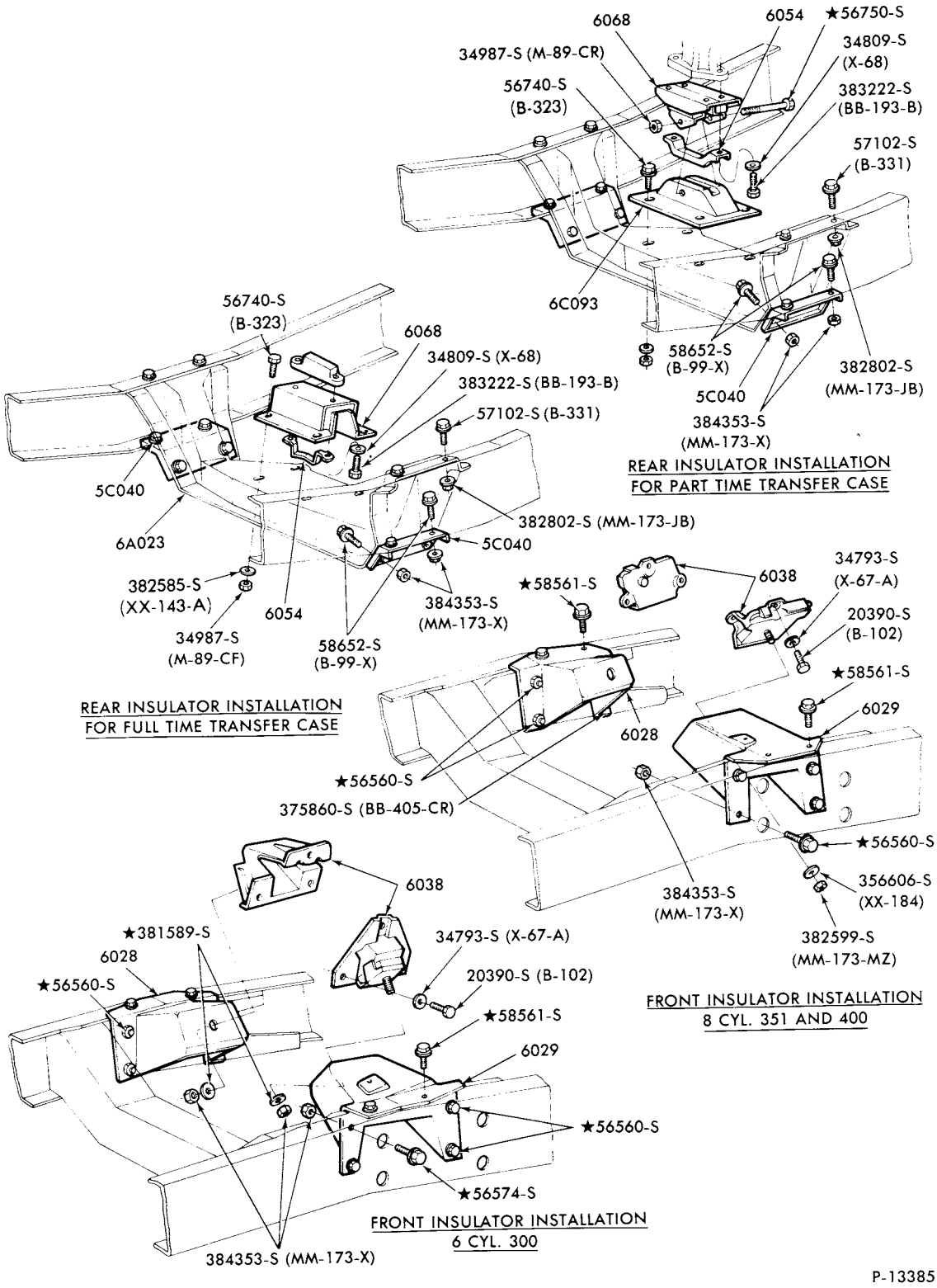

ENGINE SUPPORTS, INSULATORS and RELATED PARTS (FRONT and REAR) - TYPICAL
1977/ F250/350--4/W/D and 6 CYL. 300 and 8 CYL. 351M and 400
1979 F350--4/W/D and 8 CYL. 351M, 400

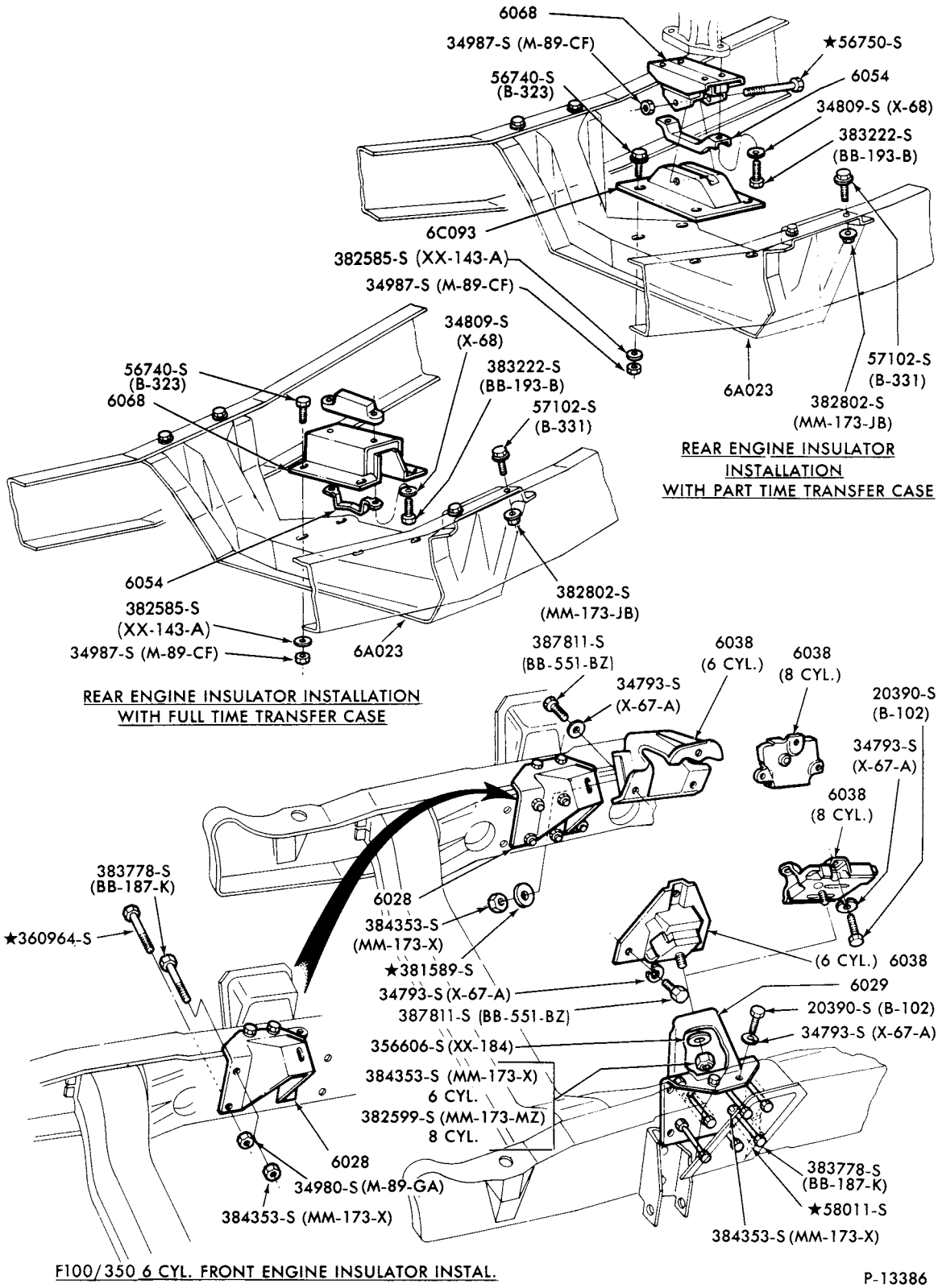

ENGINE SUPPORTS, INSULATORS and RELATED PARTS (FRONT and REAR) - TYPICAL
1977/ F150--4/W/D and 6 cyl. 300 and 8 cyl. 351M and 400

COPYRIGHT © 1979 FORD MOTOR COMPANY-DEARBORN, MICHIGAN

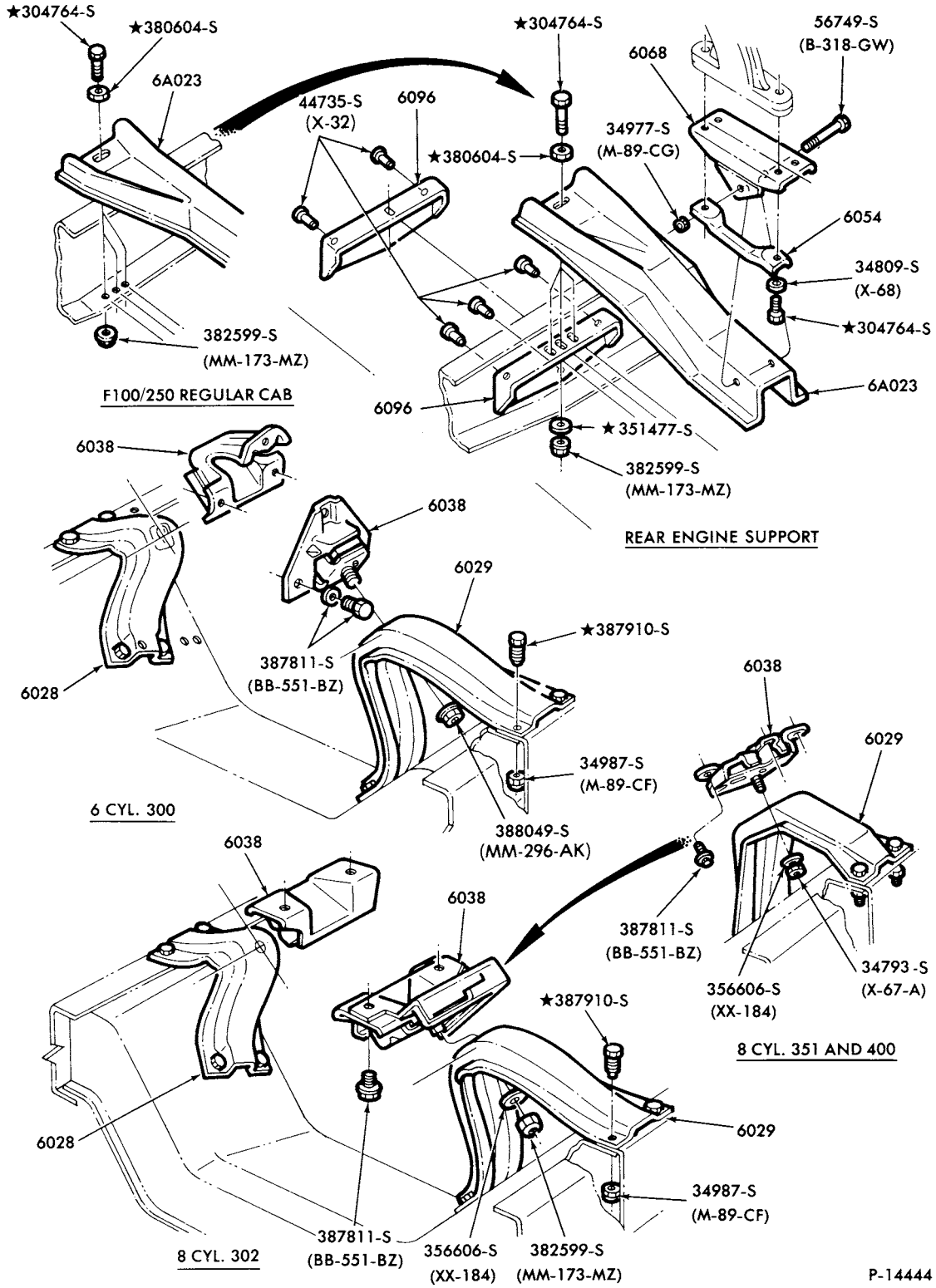

ENGINE SUPPORTS, INSULATORS and RELATED PARTS (FRONT and REAR)-TYPICAL
1977/ F100/350--6 CYL. 300 and 8 CYL. 302,351M and 400

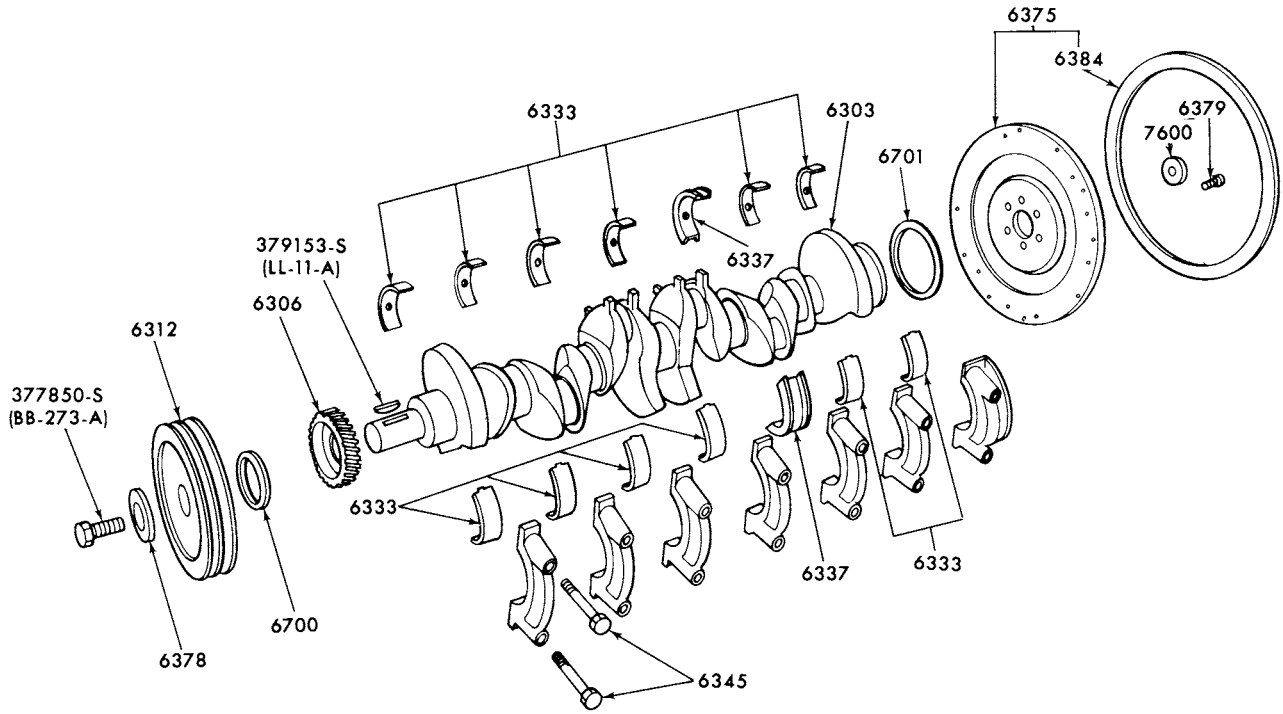

ENGINE CRANKSHAFT, FLYWHEEL and RELATED PARTS-TYPICAL
1973/ 6 CYL. 240 and 300

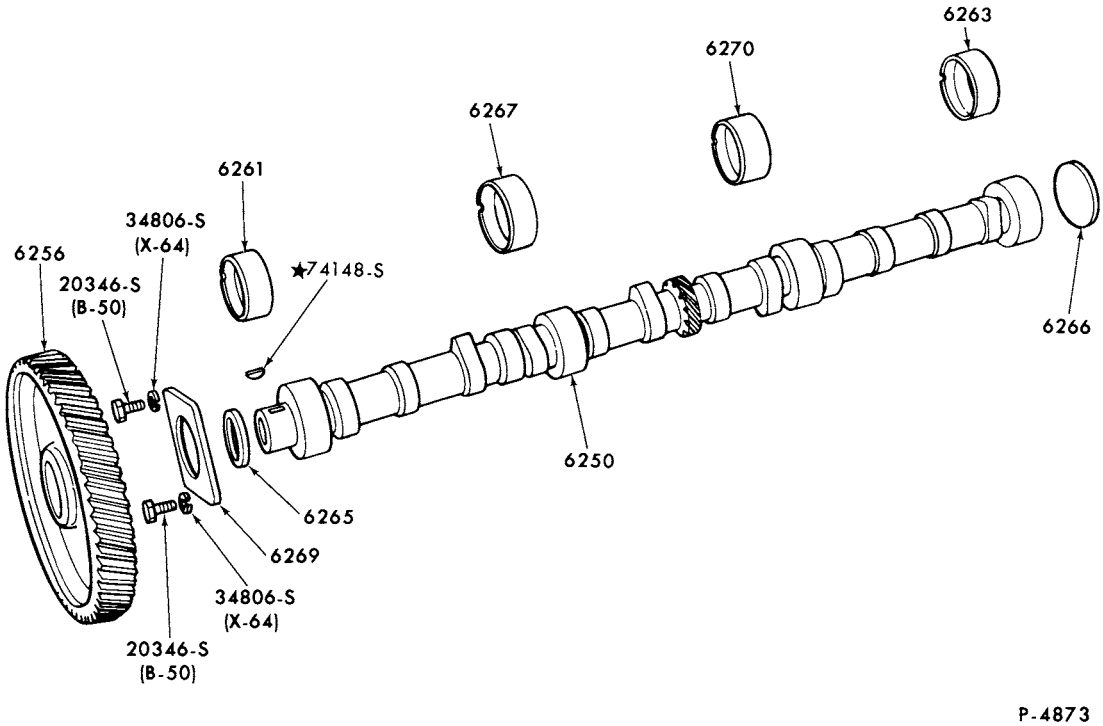

ENGINE CAMSHAFT, GEAR,BEARINGS and RELATED PARTS-TYPICAL
1973/ 6 CYL. 240 and 300

COPYRIGHT © 1979 FORD MOTOR COMPANY, DEARBORN, MICHIGAN

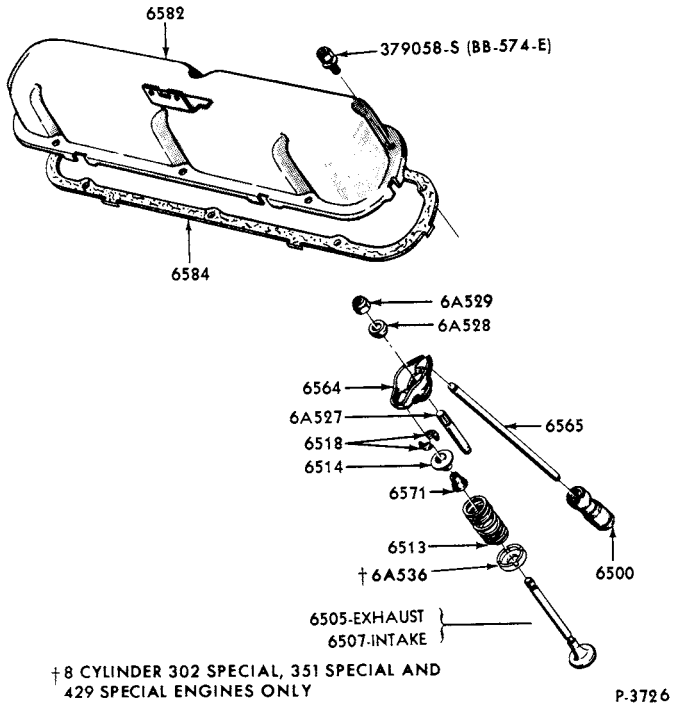

ENGINE VALVES, PUSH RODS, ROCKER ARM COVER and RELATED PARTS-TYPICAL
1973/ 6 CYL. 240,300 and 8 CYL. 302,351,400 and 460

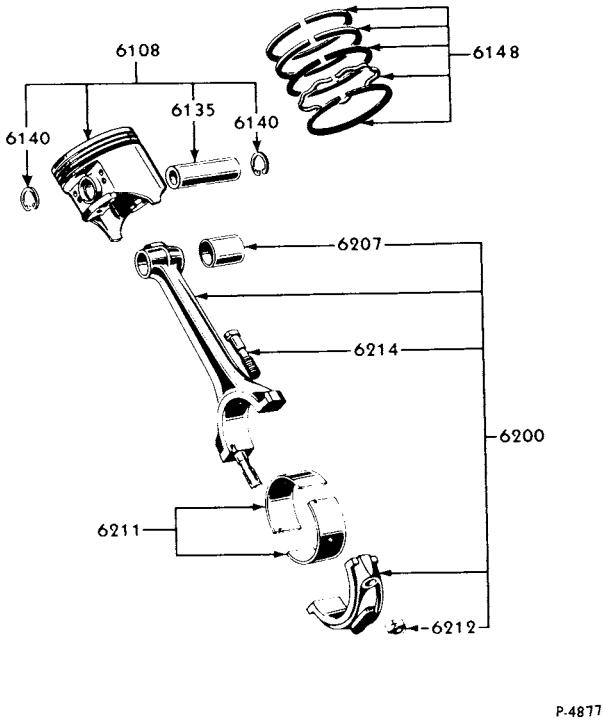

ENGINE PISTON, CONNECTING ROD and RELATED PARTS-TYPICAL
1973/ 6 CYL. 240, 300 and 8 CYL. 330, 360 and 390

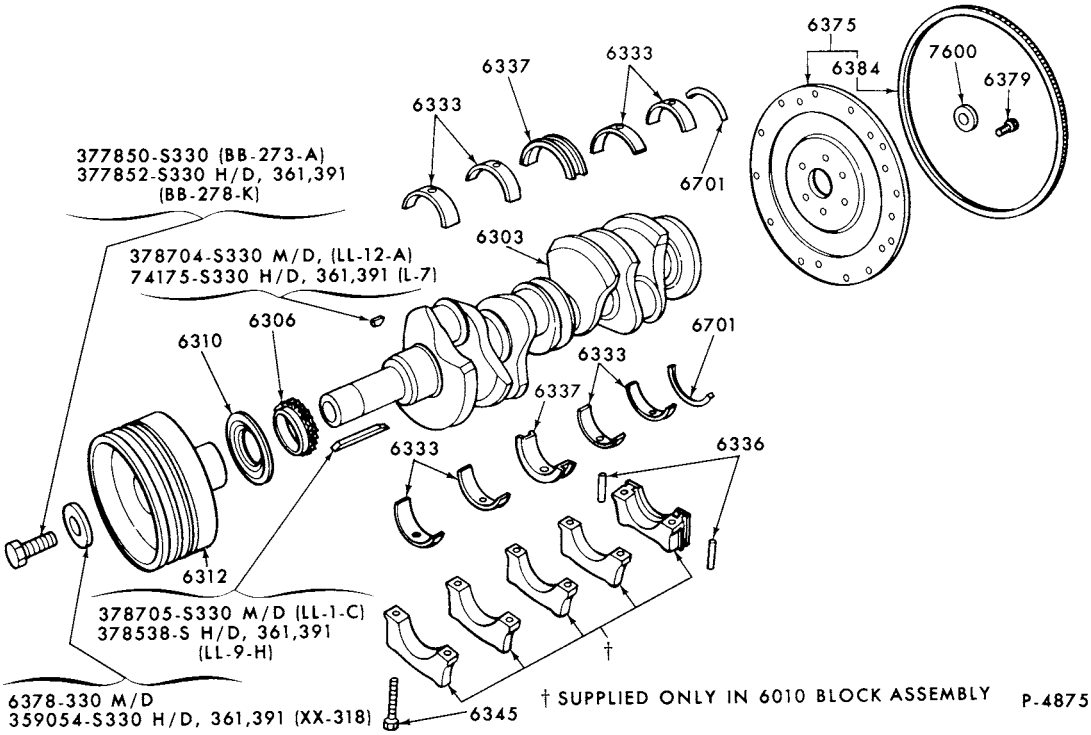

ENGINE CRANKSHAFT, FLYWHEEL and RELATED PARTS-TYPICAL
1973/77 8 CYL. 330

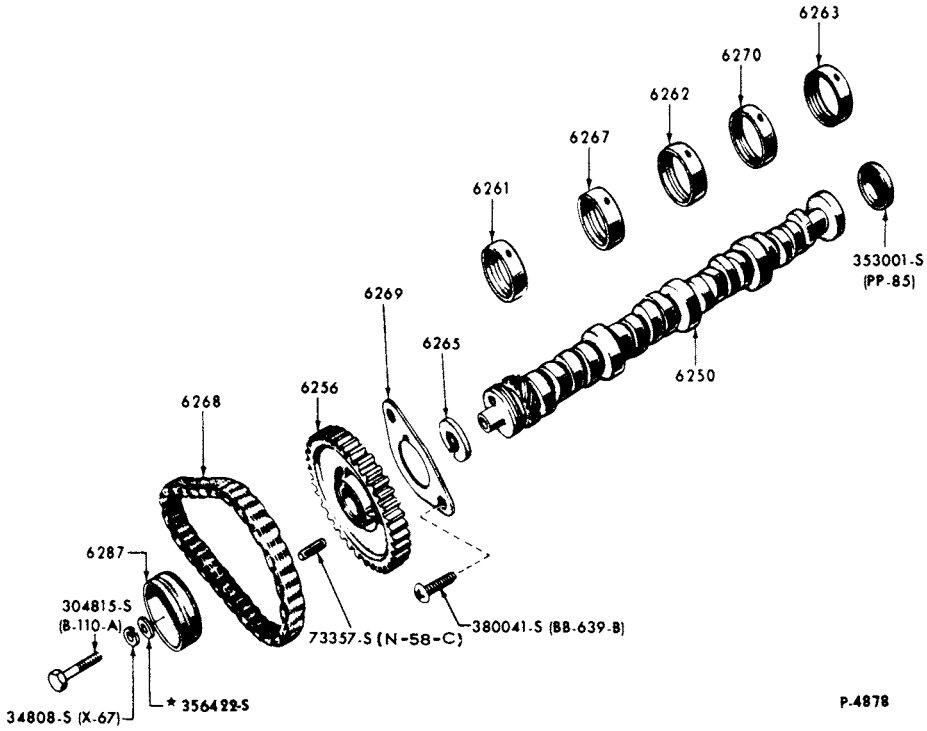

ENGINE CAMSHAFT, GEAR, BEARINGS and RELATED PARTS-TYPICAL
1973/77 8 CYL. 330, 360 and 390

COPYRIGHT © 1979 — FORD MOTOR COMPANY — DEARBORN, MICHIGAN

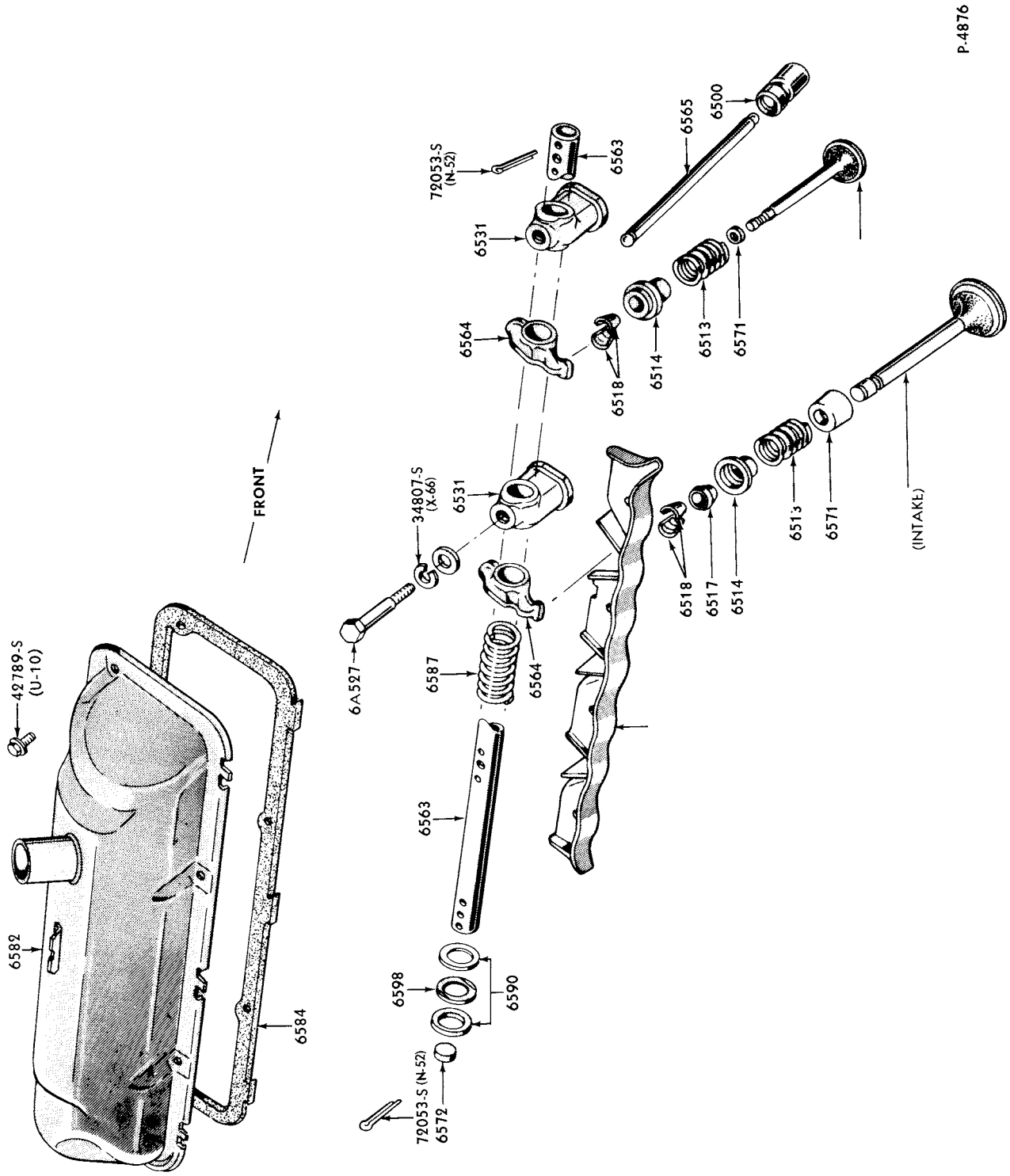

ENGINE VALVES, PUSH RODS, ROCKER ARM COVER and RELATED PARTS-TYPICAL
1973/77 8 CYL. 330

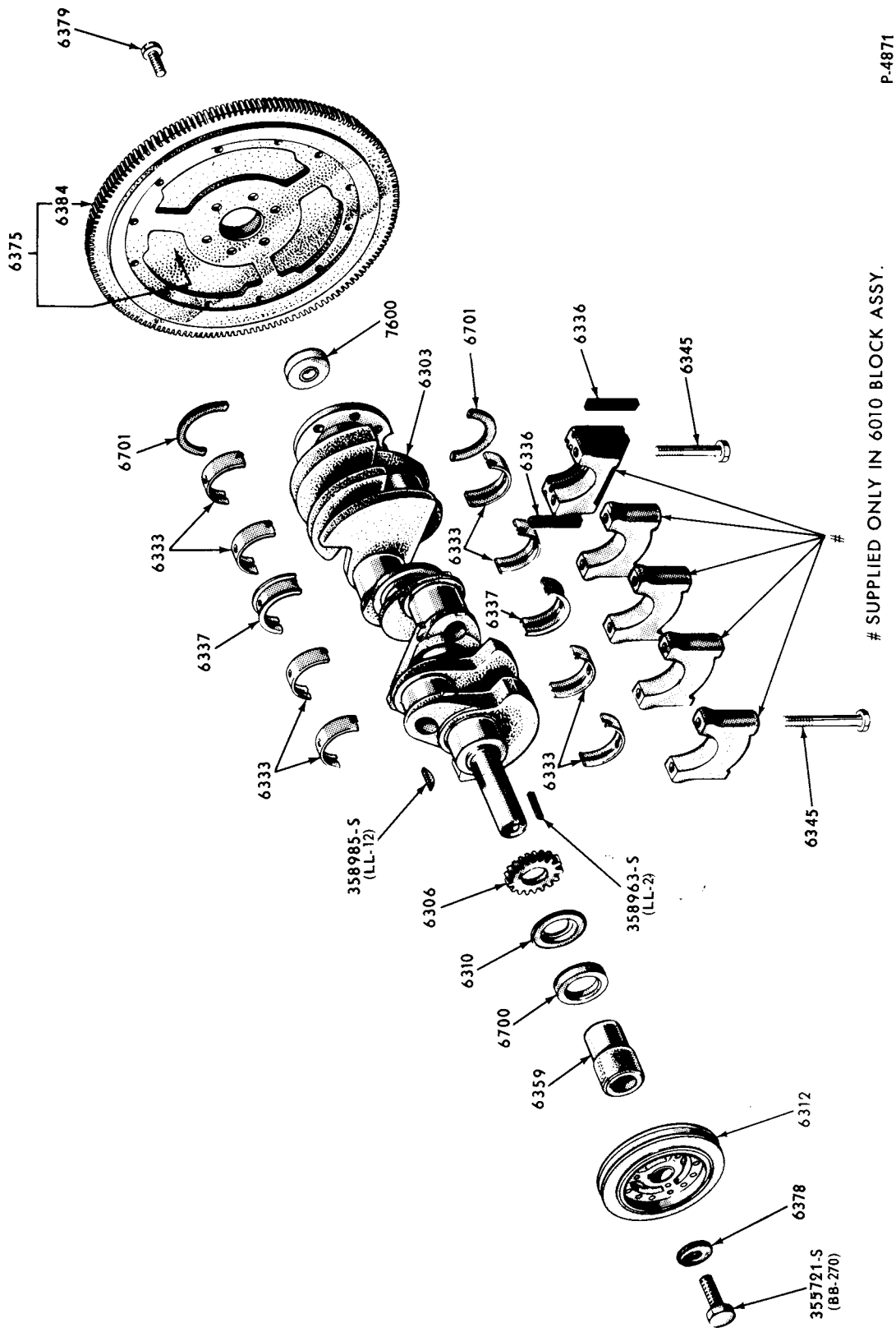

ENGINE CRANKSHAFT, FLYWHEEL and RELATED PARTS-TYPICAL
1973/76 8 CYL. 360 and 390

COPYRIGHT © 1979 FORD MOTOR COMPANY—DEARBORN, MICHIGAN

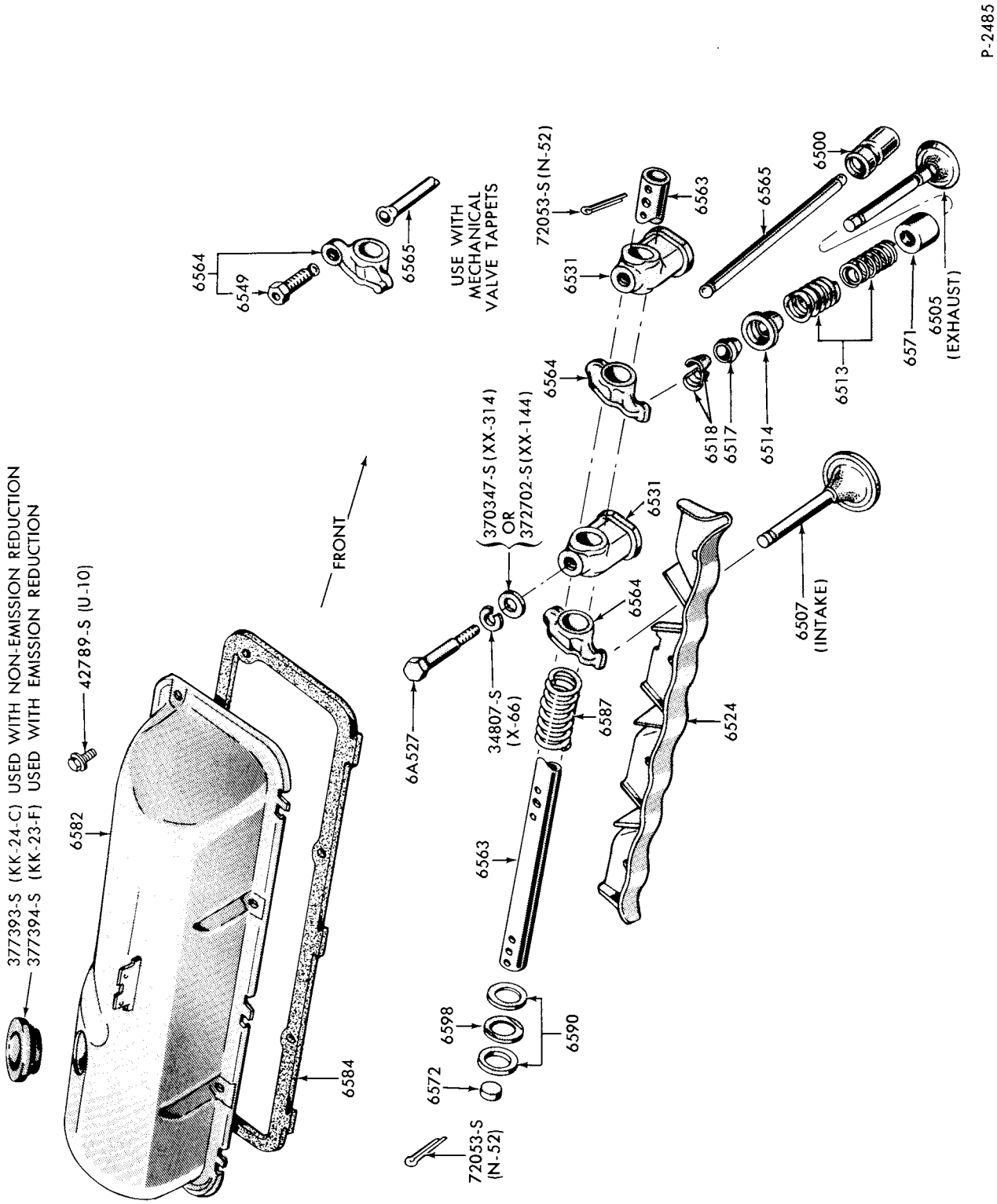

ENGINE VALVES, PUSH RODS, ROCKER ARM COVER and RELATED PARTS-TYPICAL
1973/76 8 CYL. 360 and 390

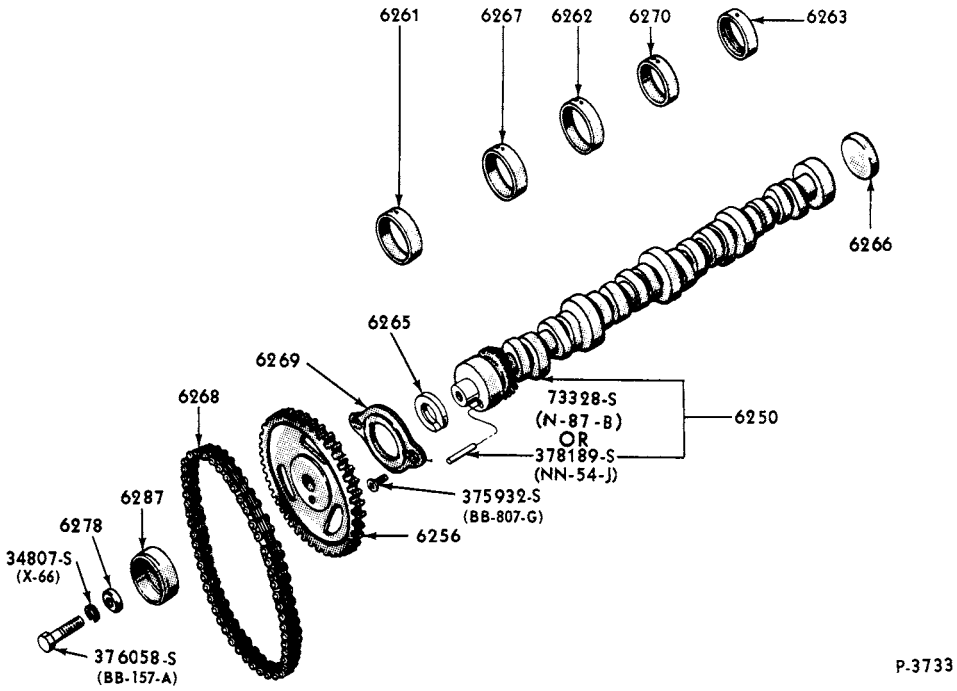

ENGINE CAMSHAFT, GEAR, BEARINGS and RELATED PARTS-TYPICAL
1973/ 8 CYL. 302, 351 and 460

COPYRIGHT © 1979 FORD MOTOR COMPANY—DEARBORN, MICHIGAN

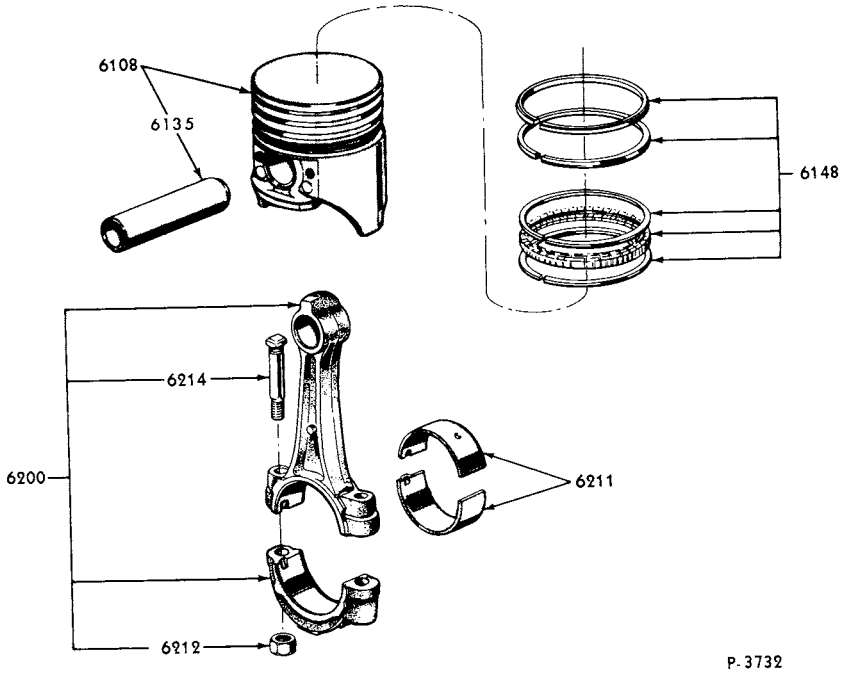

ENGINE PISTON, CONNECTING ROD and RELATED PARTS-TYPICAL
1973/ 8 CYL. 302, 351, 400 and 460

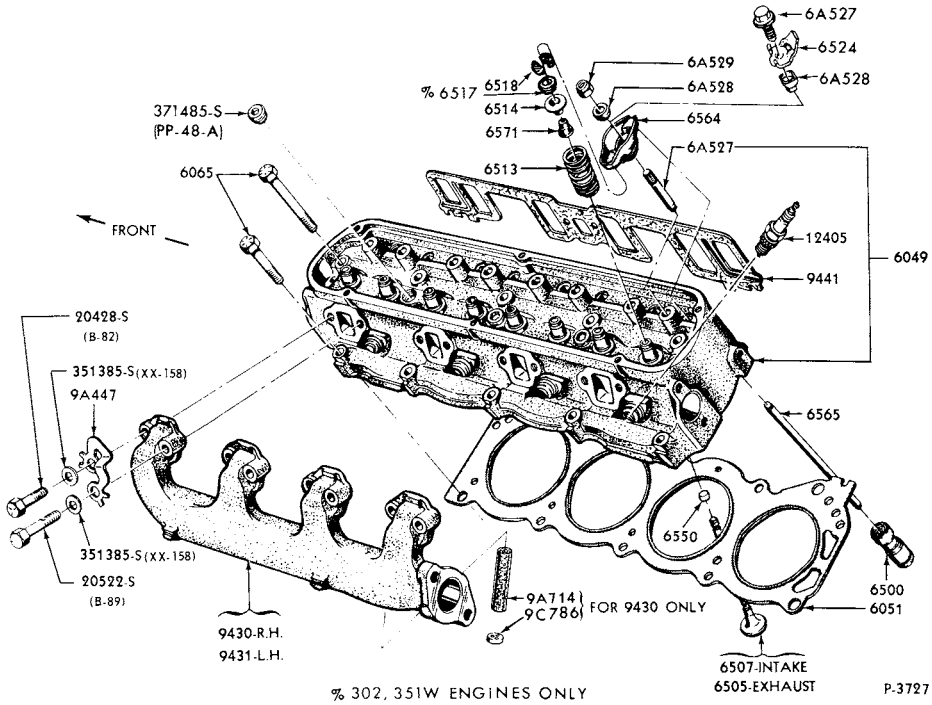

ENGINE CYLINDER HEAD, VALVES and RELATED PARTS-TYPICAL
1973/ 8 CYL. 302, 351, 400 and 460

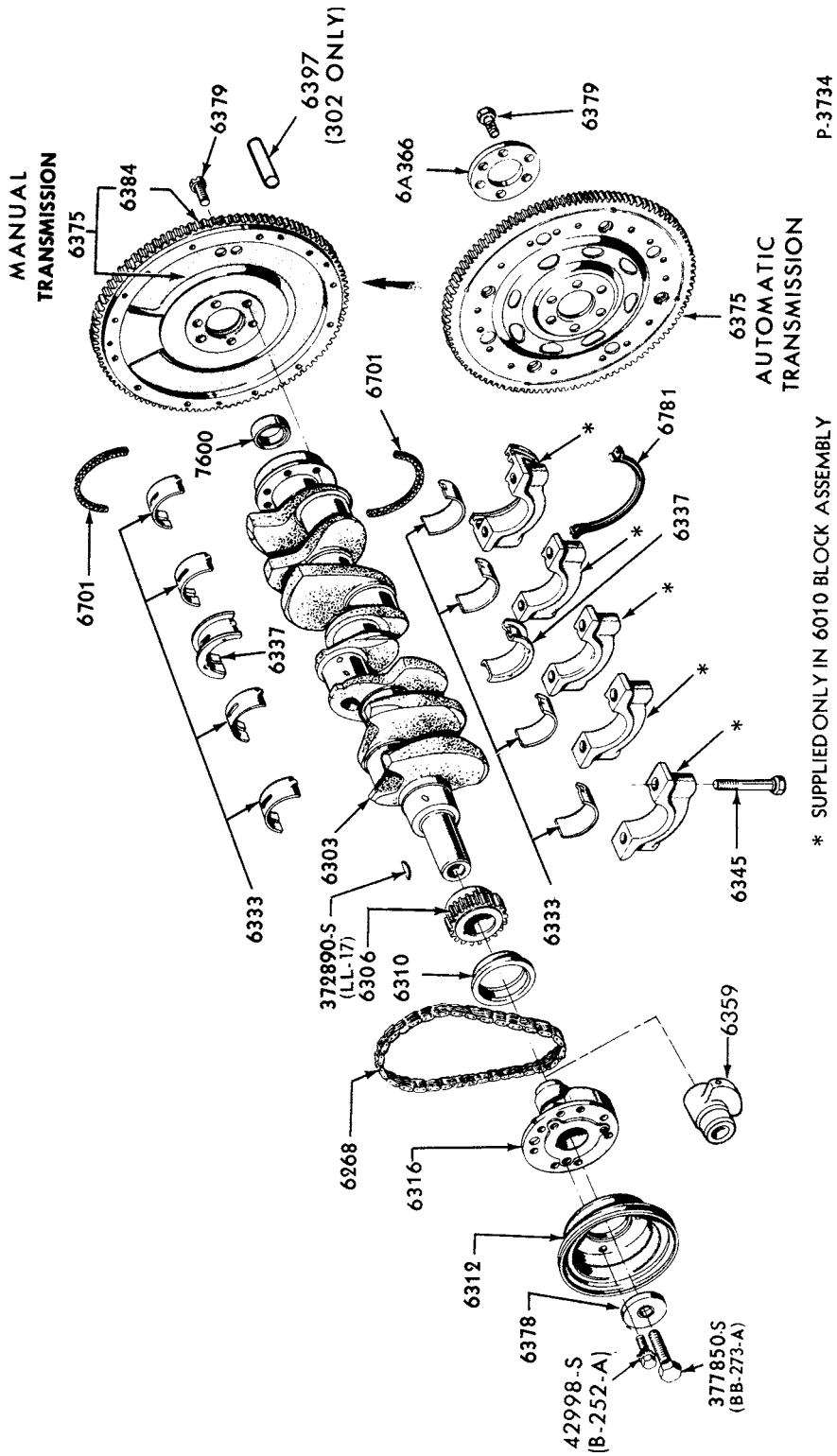

ENGINE CRANKSHAFT, FLYWHEEL and RELATED PARTS
1973/ 8 CYL. 302, 351 and 460

COPYRIGHT © 1980 FORD MOTOR COMPANY DEARBORN, MICHIGAN

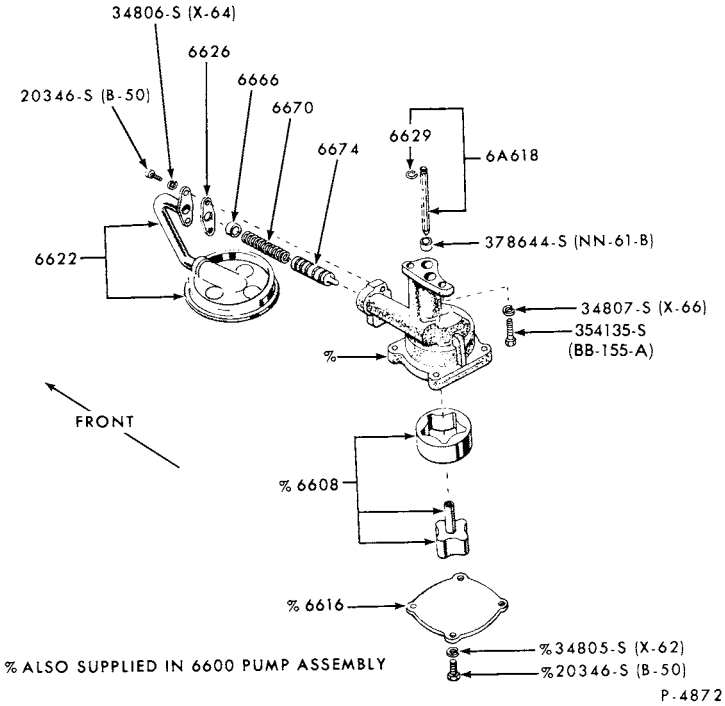

ENGINE OIL PUMP and RELATED PARTS (ROTOR TYPE)-TYPICAL
1973/ 6 CYL. 240 and 300

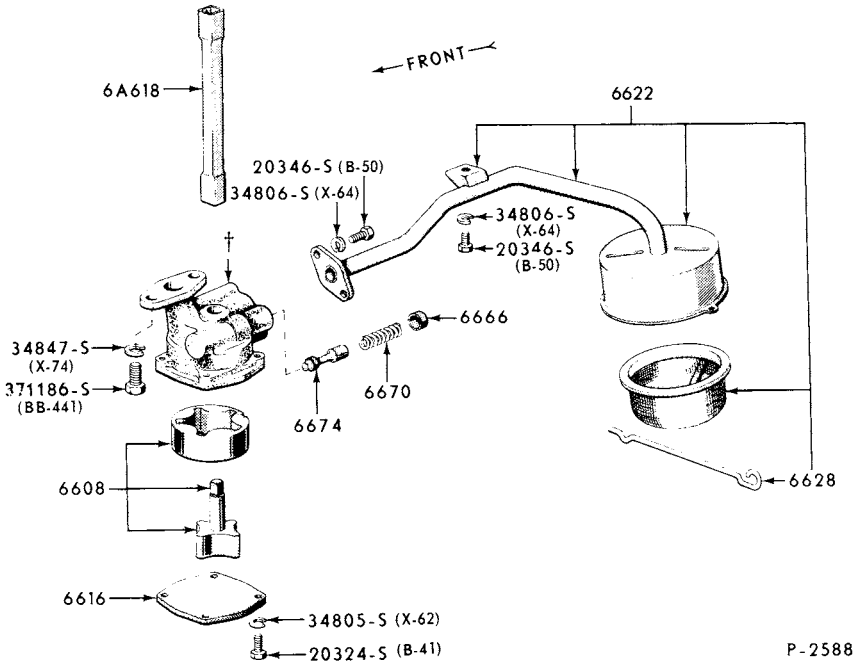

† SERVICED ONLY IN ASSY. - GROUP 6600

ENGINE OIL PUMP and RELATED PARTS-TYPICAL
1973/76 8 CYL. 330

COPYRIGHT © 1979 FORD MOTOR COMPANY, DEARBORN, MICHIGAN

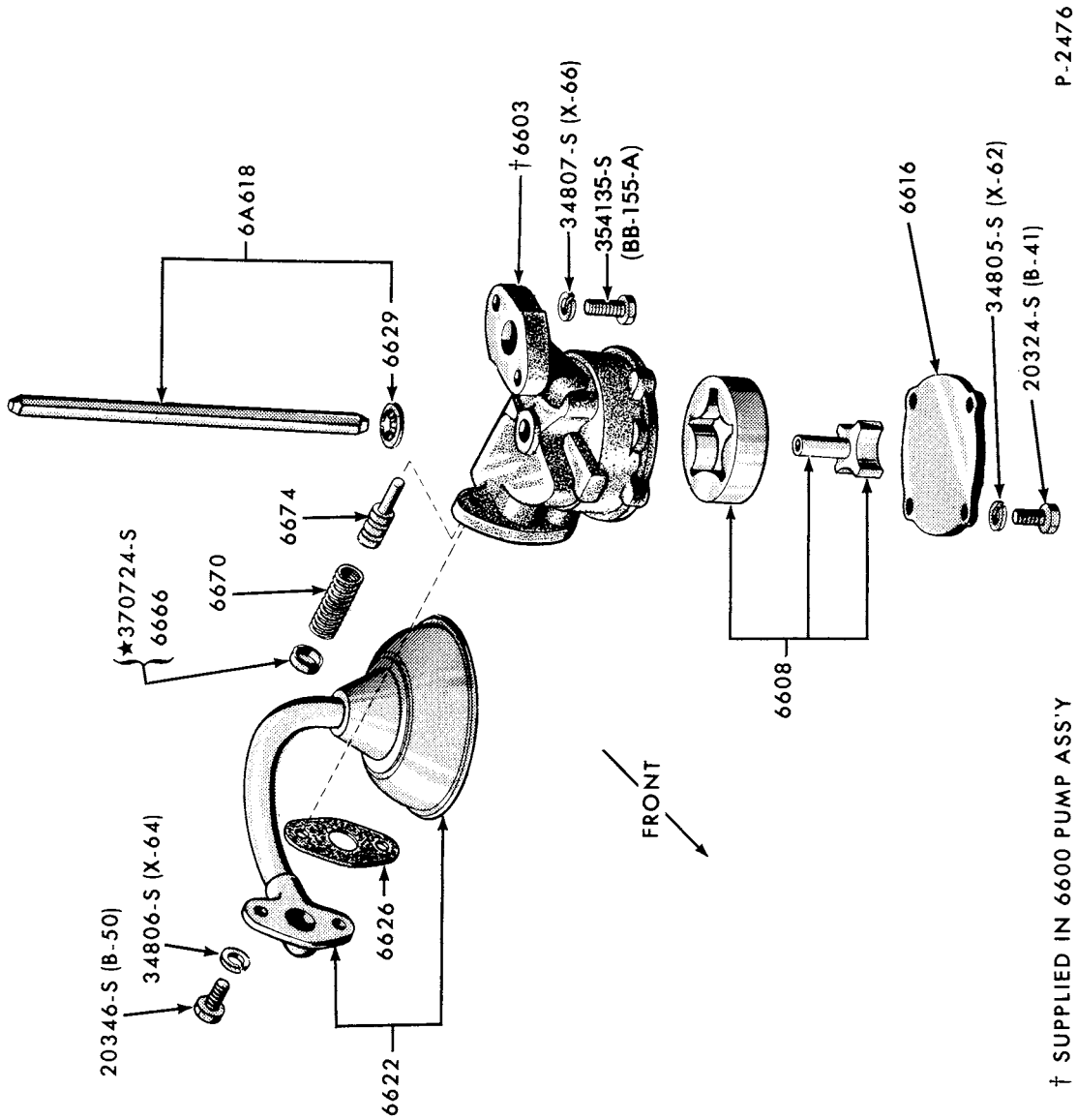

ENGINE OIL PUMP and RELATED PARTS-TYPICAL
1973/77 8 CYL. 360 and 390

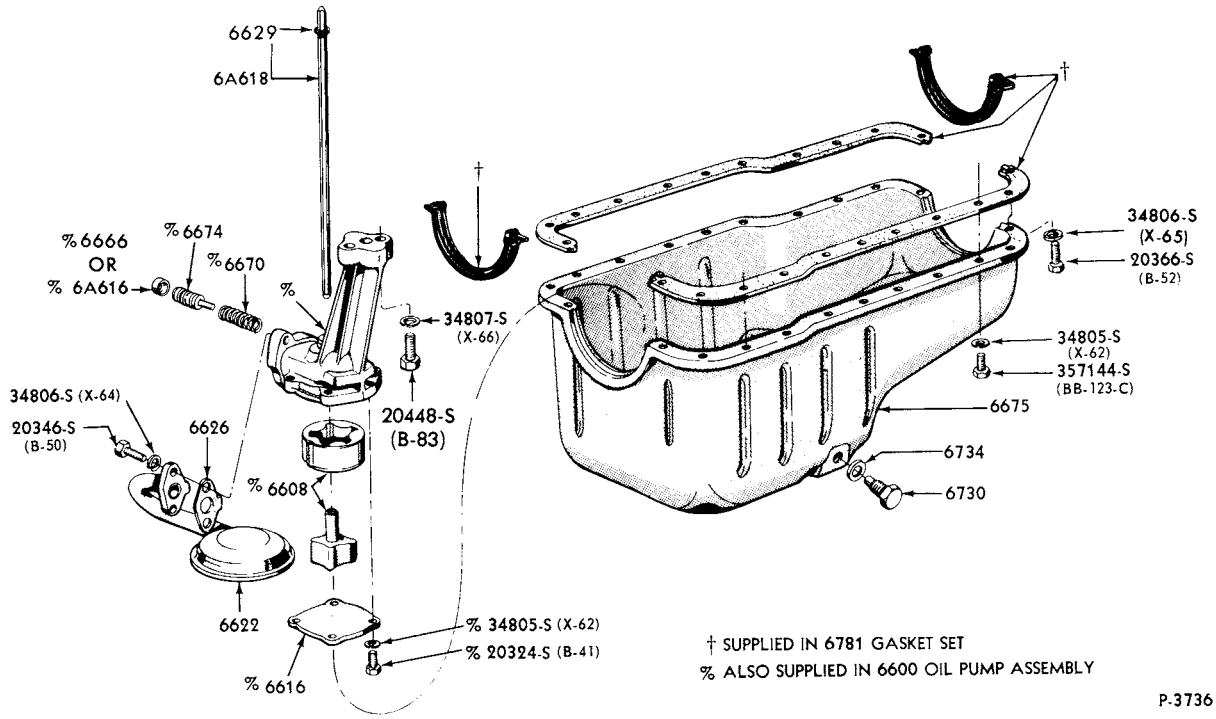

ENGINE OIL PUMP and RELATED PARTS-TYPICAL
1973/ 8 CYL. 302, 351, 400 and 460

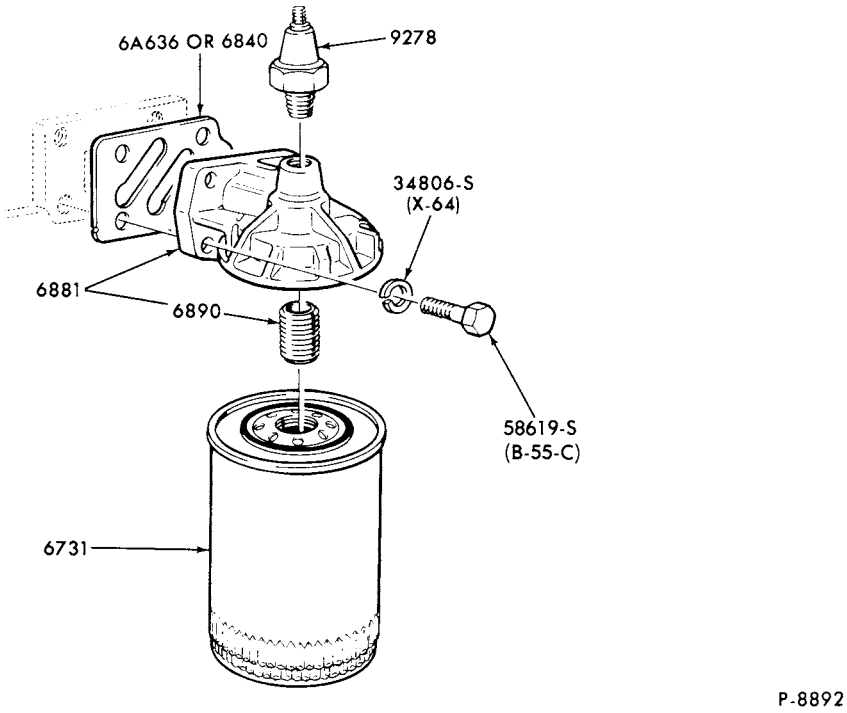

ENGINE OIL FILTER and RELATED PARTS (SPIN-ON TYPE)-TYPICAL
1973/76 F100/350--8 CYL. 360 and 390

COPYRIGHT © 1979 FORD MOTOR COMPANY DEARBORN, MICHIGAN

1973/79 TRUCK SERIES 100/500

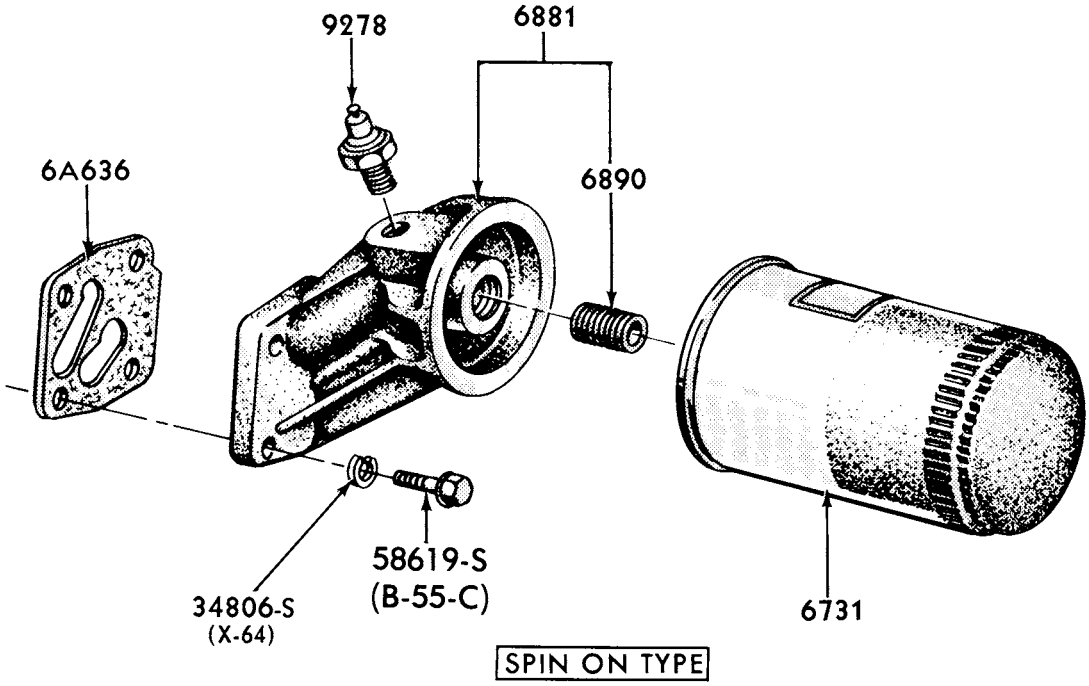

P-4792

ENGINE OIL FILTER and RELATED PARTS (SPIN-ON TYPE)-TYPICAL
1973/77 8 CYL. 330 M/D

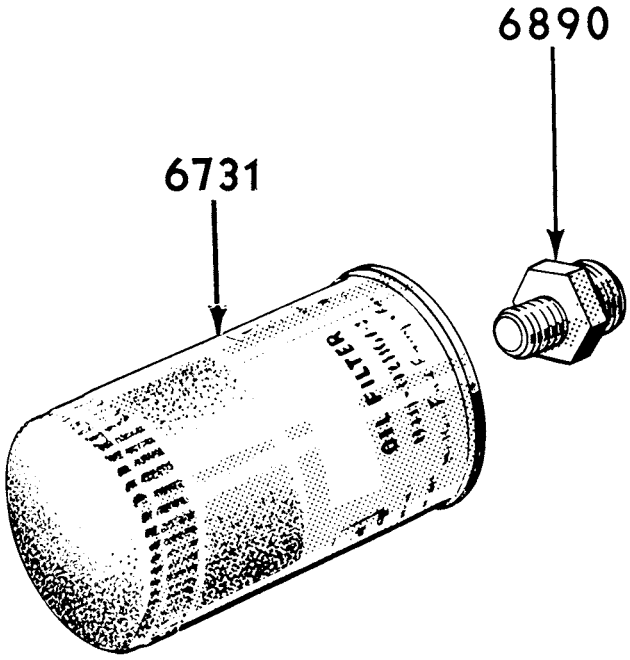

P-2384

ENGINE OIL FILTER and RELATED PARTS (SPIN-ON TYPE)-TYPICAL
1973/ 6 CYL. 240, 300 and 8 CYL. 302, 351, 400 and 460

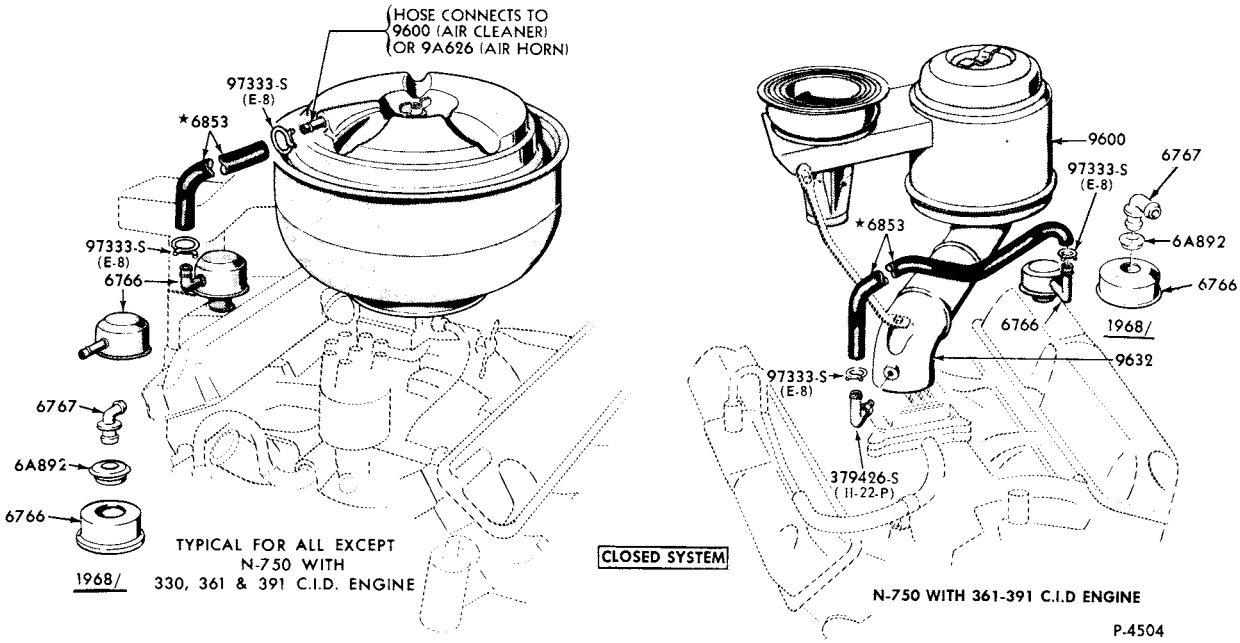

ENGINE EMISSION REDUCTION SYSTEM and RELATED PARTS
1973/77 8 CYL. 330

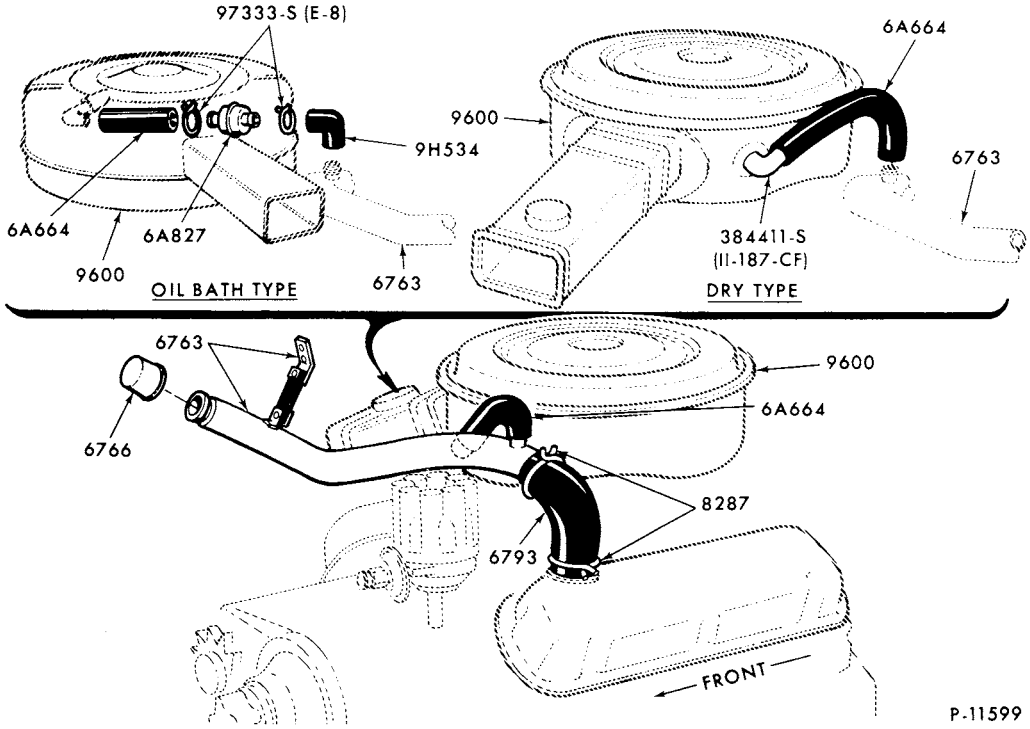

ENGINE EMISSION REDUCTION SYSTEM and RELATED PARTS
1973/74 E100/300--8 CYL. 302

COPYRIGHT © 1979 FORD MOTOR COMPANY, DEARBORN, MICHIGAN

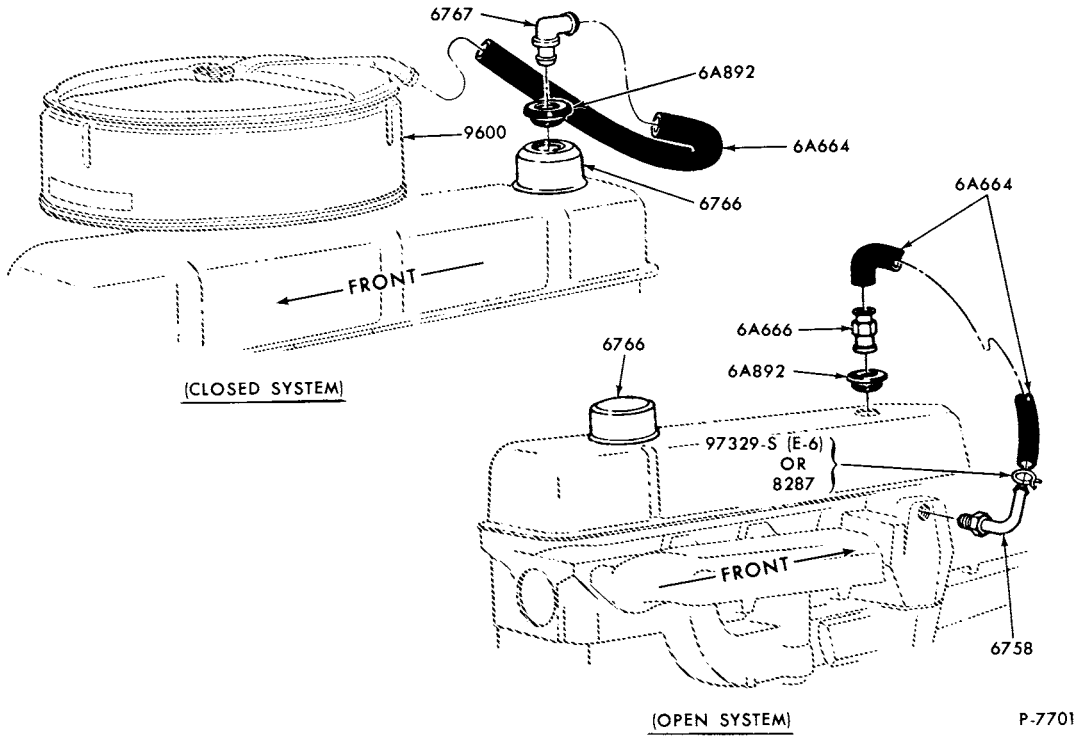

ENGINE EMISSION REDUCTION SYSTEM and RELATED PARTS
1973/ B-F100/500--6 CYL. 240 and 300

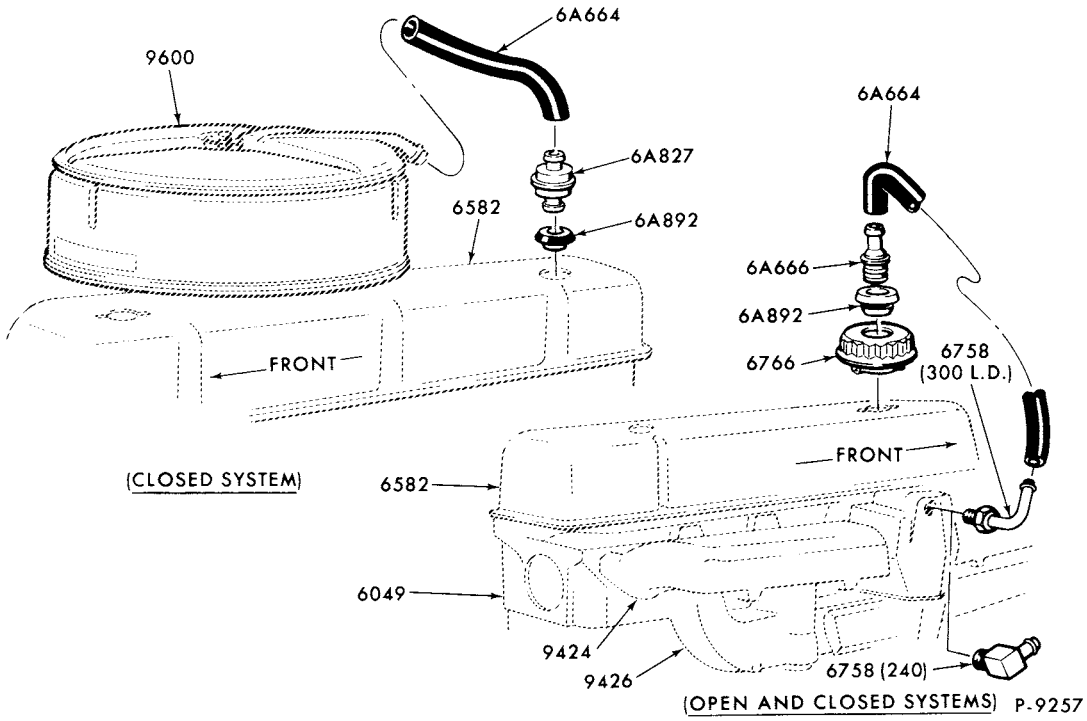

ENGINE EMISSION REDUCTION SYSTEM and RELATED PARTS
1973/77 P350/500--6 CYL. 300

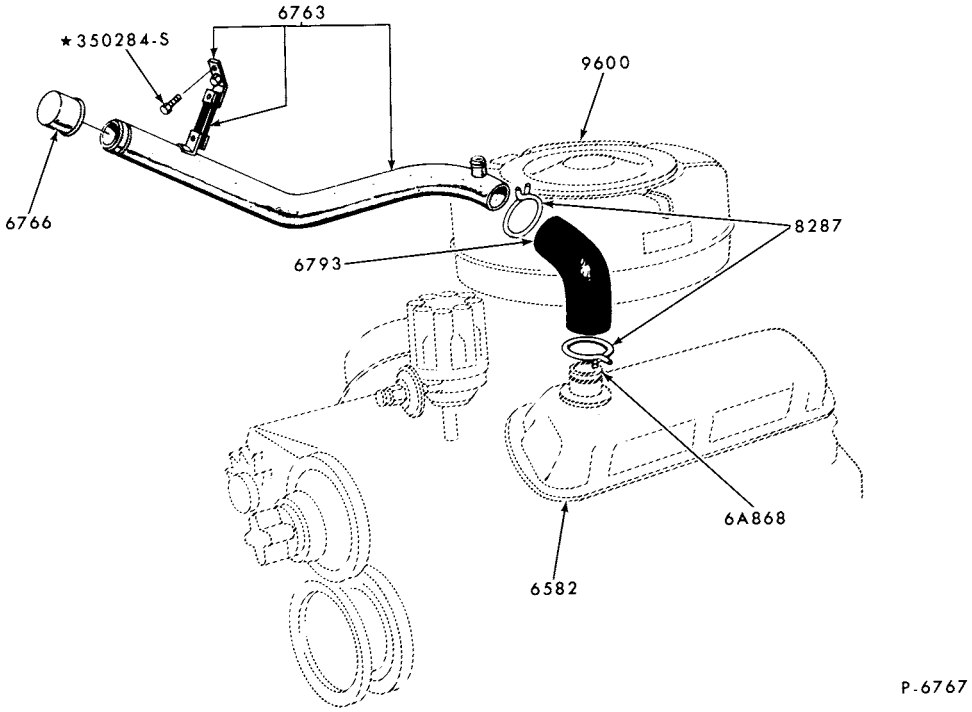

ENGINE OIL FILLER PIPE INSTALLATION and RELATED PARTS
1973/ E100/350--6 CYL. 240,300 and 8 CYL. 302,351W and 460

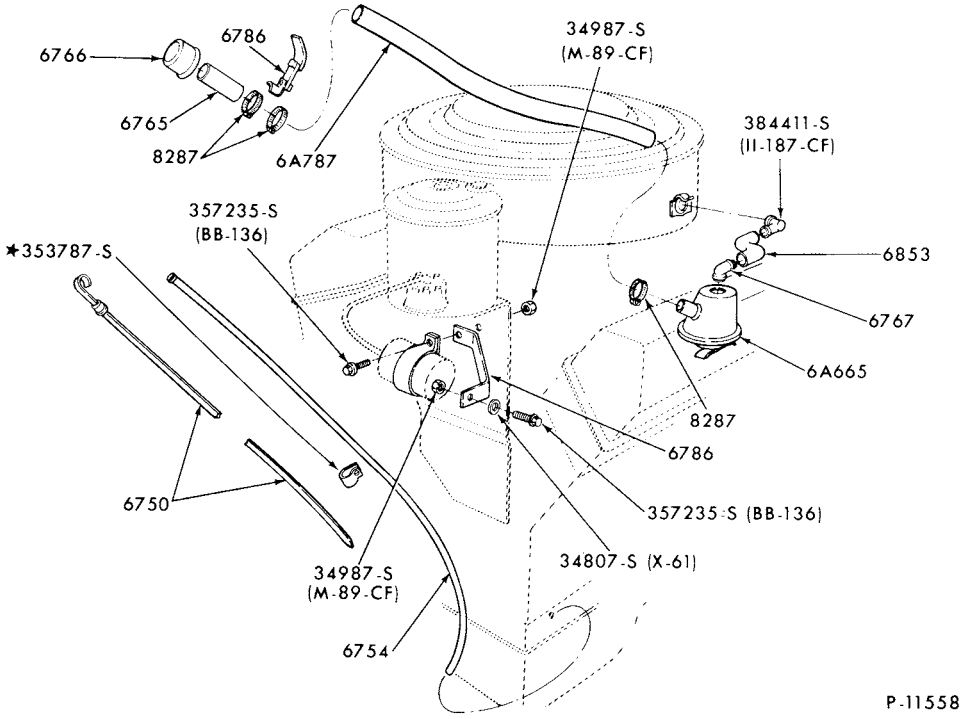

OIL LEVEL INDICATOR, OIL FILLER and RELATED PARTS
1973 M450/500

COPYRIGHT © 1979 FORD MOTOR COMPANY DEARBORN, MICHIGAN

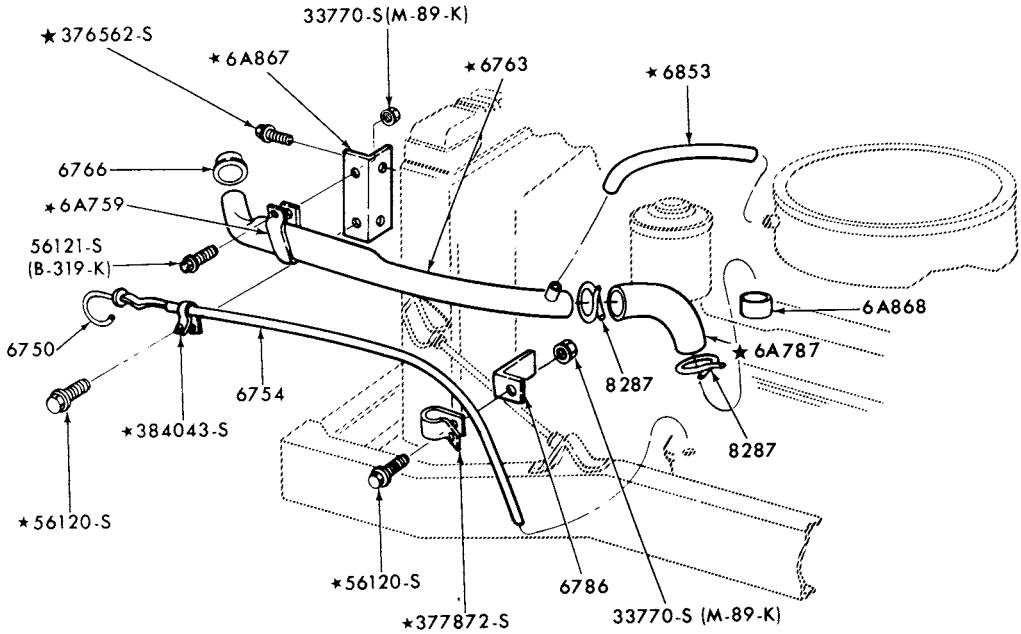

OIL LEVEL INDICATOR, OIL FILLER and RELATED PARTS
1974/76 M450/500--8 CYL. 360, 390

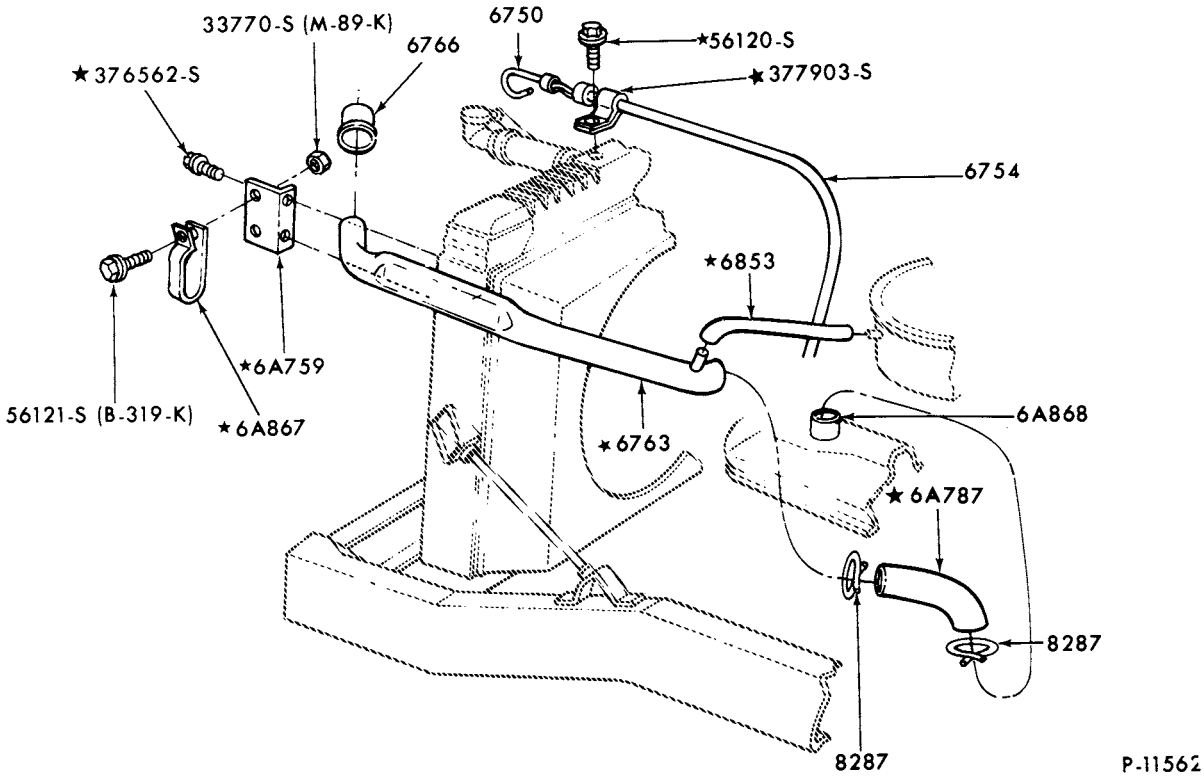

OIL LEVEL INDICATOR, OIL FILLER and RELATED PARTS
1974/76 M450/500--8 CYL. 460

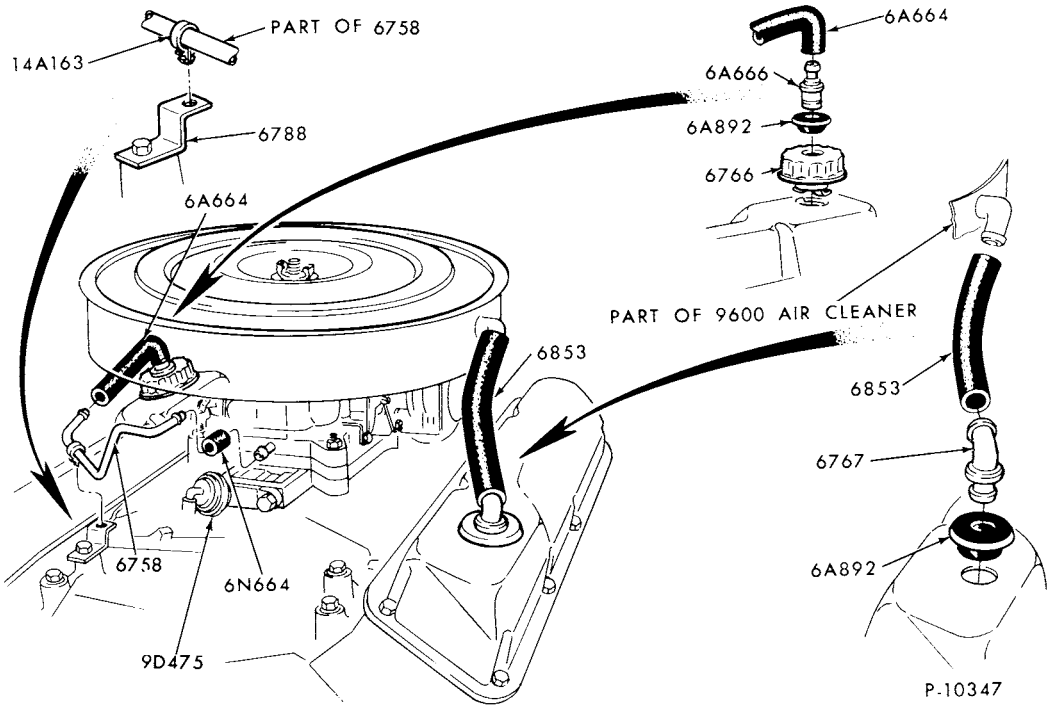

ENGINE EMISSION REDUCTION and RELATED PARTS
1977/ 8 CYL. 351M and 400

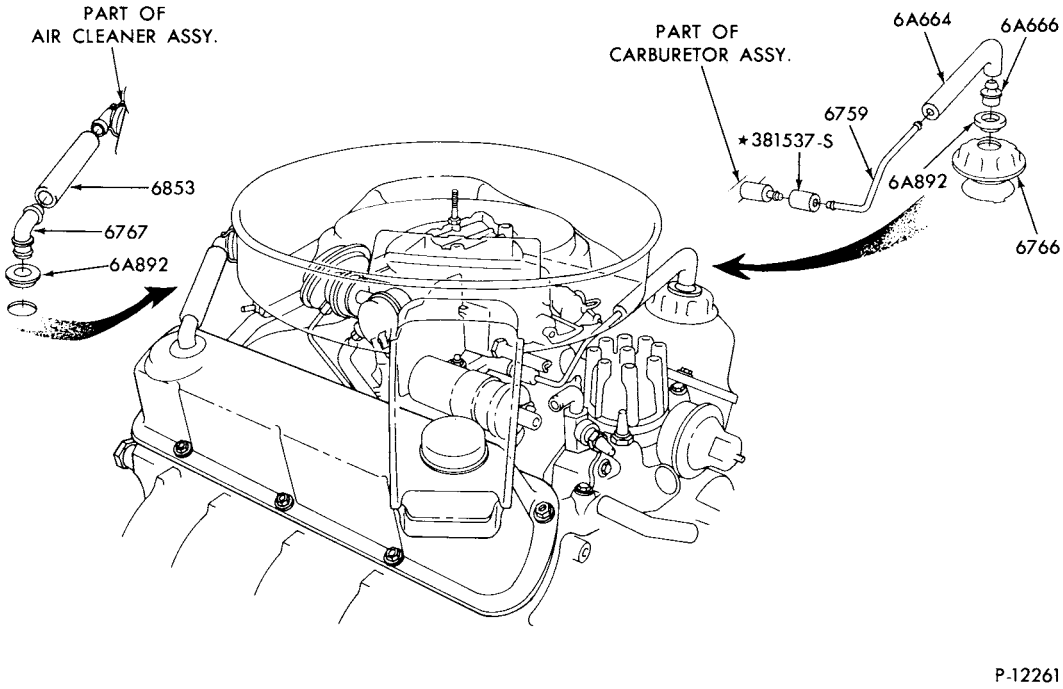

ENGINE EMISSION REDUCTION and RELATED PARTS
1975/ 8 CYL. 302 and 351W

COPYRIGHT © 1979 FORD MOTOR COMPANY, DEARBORN, MICHIGAN

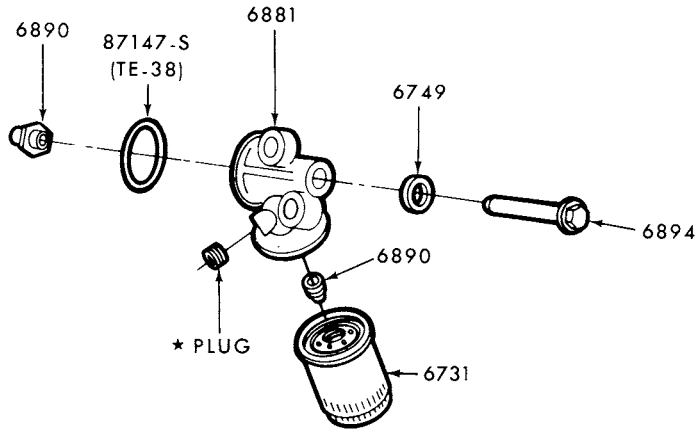

P-15008

ENGINE OIL FILTER and RELATED PARTS (SPIN-ON TYPE)
1978/ E250/350--8 CYL. 460

INDEX

THIS INDEX SECTION INCLUDES THE FOLLOWING MAJOR GROUPS

CLUTCH
GEARSHIFT MECHANISM
POWER-TAKE-OFF
TRANSFER CASE
TRANSMISSIONS (AUXILIARY)
TRANSMISSIONS (MAIN)

YEAR 19__	TITLE	MODEL	SECTION	PAGE	ILLUS. NO.
	B SERIES				
	EXTERNAL PARTS				
	CLUTCH and BRAKE PEDAL PARTS				
73/77	Clutch and brake pedal parts	B500	72	6	P-5849
	GEARSHIFT MECHANISM				
73/77	Transmission and parking brake covers, seals, boots and retainers	B500	72	2	P-5815
	Gearshift mechanism				
73/77	4 speed - New Process 435	B500	70.4	4	P-4232
73/77	5 speed - Clark 280 series - typical - "Before Ser. S20,001"	B500	70.5	2	P-6227
	- Clark 280 and 390 series - typical - "From Ser. S20,001"	B500	70.5	5	P-11525
	- New Process 542 - typical	B500	70.5	4	P-2397
	TRANSMISSION SUPPORTS				
73/77	4 speed - New Process	B500	70.4	2	P-4769
	INTERNAL PARTS				
	TRANSMISSION (MAIN)				
73/77	4 speed - New Process 435	B500	70.4	1	P-4231
73/77	5 speed - New Process 542 - typical	B500	70.5	3	P-8315
73/77	5 speed - Clark 280	B500	70.5	1	P-6226
	E SERIES				
	EXTERNAL PARTS				
	CLUTCH and BRAKE PEDAL PARTS				
73/74	Manual and automatic transmissions	E100/300	72	4	P-11019
75/	Manual and automatic transmissions	E100/350	72	10	P-11660
75/	Clutch disc, pressure plate and housing	E100/350	72	3	P-11705
	GEARSHIFT MECHANISM				
73/74	Gearshift mechanism (remote control) - typical	E100/300	70.3	3	P-10009
75/	Gearshift mechanism (remote control) - typical	E100/350	70.3	6	P-11617
	Gearshift Mechanism				
78/	4 speed with overdrive	E100/250	70.3	7	P-14219
73/74	Steering column	E100/300	35	2	P-6451
75/77	Steering column	E100/350	35	19	P-11630
78/	Steering column - 3 speed M/T	E100/350	35	28	P-14239
78/	Steering column - 4 speed M/T	E100/350	35	29	P-14240
	INTERNAL PARTS				
	TRANSMISSION (MAIN)				
73/	3 speed - Ford 303 - typical	E100/350	70.3	1	P-14442
78/	4 speed - Ford with overdrive	E100/250	70.4	6	P-14216

COPYRIGHT © 1980— FORD MOTOR COMPANY —DEARBORN, MICHIGAN

INDEX

YEAR 19__	TITLE	MODEL	SECTION	PAGE	ILLUS. NO.
	F SERIES				
	EXTERNAL PARTS				
	CLUTCH and BRAKE PEDAL PARTS				
73/76	Clutch and brake pedal parts	F100/350	72	9	P-11462
		F500 (1973/76)	72	6	P-5849
77/	Clutch and brake pedal parts--Page A	F100/350	72	11	P-13375
	--Page B	F100/350	72	12	P-13376
77/	Clutch disc, pressure plate and housing-6 cyl. 300 and 8 cyl. 302	F100/350	72	3	P-14582
77/	Clutch disc, pressure plate and housing-8 cyl. 351 and 400	F100/350	72	12	P-15572
	GEARSHIFT MECHANISM				
73/	Transmission and parking brake covers, boots and retainers	F100/250	72	1	P-5814
		F500 (1973/76)	72	2	P-5815
73/	Gearshift (4 speed helical) Warner T18 and T19	F100/350	70.4	3	P-8798
74/77	Gearshift (4 speed helical) Warner T18 and T19	F500	70.4	3	P-8798
	Gearshift Mechanism				
73/	3 speed	F100/250	70.3	2	P-10008
73/77	4 speed - New Process 435	F100/500	70.4	4	P-4232
78/	4 speed - New Process 435	F100/350	70.4	7	P-14454
78	4 speed with overdrive - typical	F100/250	70.3	8	P-14438
73/77	5 speed - Clark 280 series - typical - "Before Ser. S20,001"	F500	70.5	2	P-6227
	- New Process 542 - typical	F500	70.5	4	P-2397
73/77	5 speed - Clark 280 and 390 series - typical - "From Ser. 520,001"	F500	70.5	5	P-11525
73	Steering column - column shift	F100/350--2/W/D	35	3	P-10638
74/77	Steering column - column shift	F100/350--2/W/D	35	15	P-11049
78/	Steering column - column shift	F100/350--2/W/D	35	36	P-14247
73/77	Steering column - floor shift	F100/350--2/W/D	35	16	P-11050
78/	Steering column - floor shift	F100/350--2/W/D	35	34	P-14245
73/75	Steering column - floor shift	F100--4/W/D	35	4	P-10162
76/77	Steering column - floor shift	F100/150--4/W/D	35	24	P-12974
73/77	Steering column - floor shift	F250--4/W/D	35	6	P-10161
78/	Steering column - floor shift	F150/250--4/W/D	35	32	P-14243
73/77	Steering column	F500	35	1	P-5988
	SUPPORTS - TRANSMISSION				
73/	New Process 435	F100/350	70.4	2	P-4769
73/77	New Process 435	F500	70.4	2	P-4769
	TRANSFER CASE (FOUR WHEEL DRIVE)				
73/	Case - Dana (Spicer) - M/T (1973/76)	F100	70	1	P-5228
	- New Process - A/T - Part Time (1973/76)	F100	70	5	P-10389
	- New Process - M/T - Part Time (1973/76)	F100	70	5	P-10389
	- New Process - A/T and M/T - Part Time (1977/)	F150/350	70	5	P-10389
	- New Process - A/T - Full Time (1974/78) "Before Ser. #AG0,001"	F100/150	70	9	P-11505
	- New Process - A/T - Full Time (1977/78) "Before Ser. # AG0,001"	F250	70	9	P-11505
	- New Process - A/T - Full Time (1978/) "From Ser. #AG0,001"	F150/350	70	14	P-14451
	- New Process - A/T - Full Time (1974/76)	F250	70	10	P-11604
	- New Process - M/T and A/T (1973/76)	F250	70	3	P-9938
74/77	Transfer case stabilizer bar - A/T - Full Time	F250	70	11	P-12007
78/	Transfer case heat shield	F150/250	70	13	P-14043
73/	Gearshift mechanism and supports - M/T	F100/150	70	2	P-10342
	- A/T - Part Time	F100/150	70	6	P-10391
	- A/T - Part Time "From Ser.X60,001"	F250/350	70	6	P-10391
	- M/T	F100/150	70	6	P-10391
	- M/T and A/T - Part Time - "Before Ser.X80,001"	F250	70	4	P-9939

INDEX

YEAR 19__	TITLE	MODEL	SECTION	PAGE	ILLUS. NO.
	F SERIES - CONT'D.				
	EXTERNAL PARTS - cont'd.				
	TRANSFER CASE (FOUR WHEEL DRIVE) - cont'd.				
74/76	Gearshift mechanism and supports - A/T - Full Time	F100/150	70	7	P-11458
74/77	Gearshift mechanism and supports - A/T - Full Time - "Before Ser.X80,001"	F250	70	8	P-11459
77/	Gearshift mechanism and supports - A/T - Full Time	F150	70	12	P-13372
77/	Gearshift mechanism and supports - A/T - Full Time - "From Ser.X80,001"	F250/350	70	12	P-13372
	INTERNAL PARTS				
	TRANSMISSION (MAIN)				
73/	3 speed - Ford 303 - typical	F100/250	70.3	1	P-14442
73/	4 speed - New Process 435	F100/500	70.4	1	P-4231
	- Warner T18	F100/350	70.4	3	P-8798
	- Warner T19	F500 (1973/76)	70.4	5	P-8799
78/	4 speed - Ford with overdrive	F100/250	70.4	6	P-14216
73/77	5 speed - Clark 280 series - typical	F500	70.5	1	P-6226
	- New Process 542 - typical	F500	70.5	3	P-8315
	M SERIES				
	Refer to "P" Series for Illustrations not listed below				
	EXTERNAL PARTS				
	CLUTCH and BRAKE PEDAL PARTS				
73/76	Automatic transmission	M450/500	72	8	P-11389
	P SERIES				
	EXTERNAL PARTS				
	CLUTCH and BRAKE PEDAL PARTS				
73/77	Manual transmission	P350/400	72	5	P-6493
		P500	72	7	P-11161
73/77	Automatic transmission	P350/500	72	5	P-6493
	GEARSHIFT MECHANISM				
73/75	3 speed - Warner T87-G - gearshift mechanism	P350/500	70.3	5	P-3636
	- Warner T87-G - housing, levers and forks	P350/500	70.3	3	P-1377
73/77	4 speed - New Process 435 - column and gear parts	P350/500	35	5	P-9966
	- New Process 435 - gearshift mechanism	P100/500	70.4	4	P-4232
	INTERNAL PARTS				
	TRANSMISSION (MAIN)				
73/75	3 speed - Warner T87G	P350/500	70.3	4	P-1376
73/77	4 speed - New Process 435	P100/500	70.4	2	P-4769

COPYRIGHT © 1979 FORD MOTOR COMPANY —DEARBORN, MICHIGAN

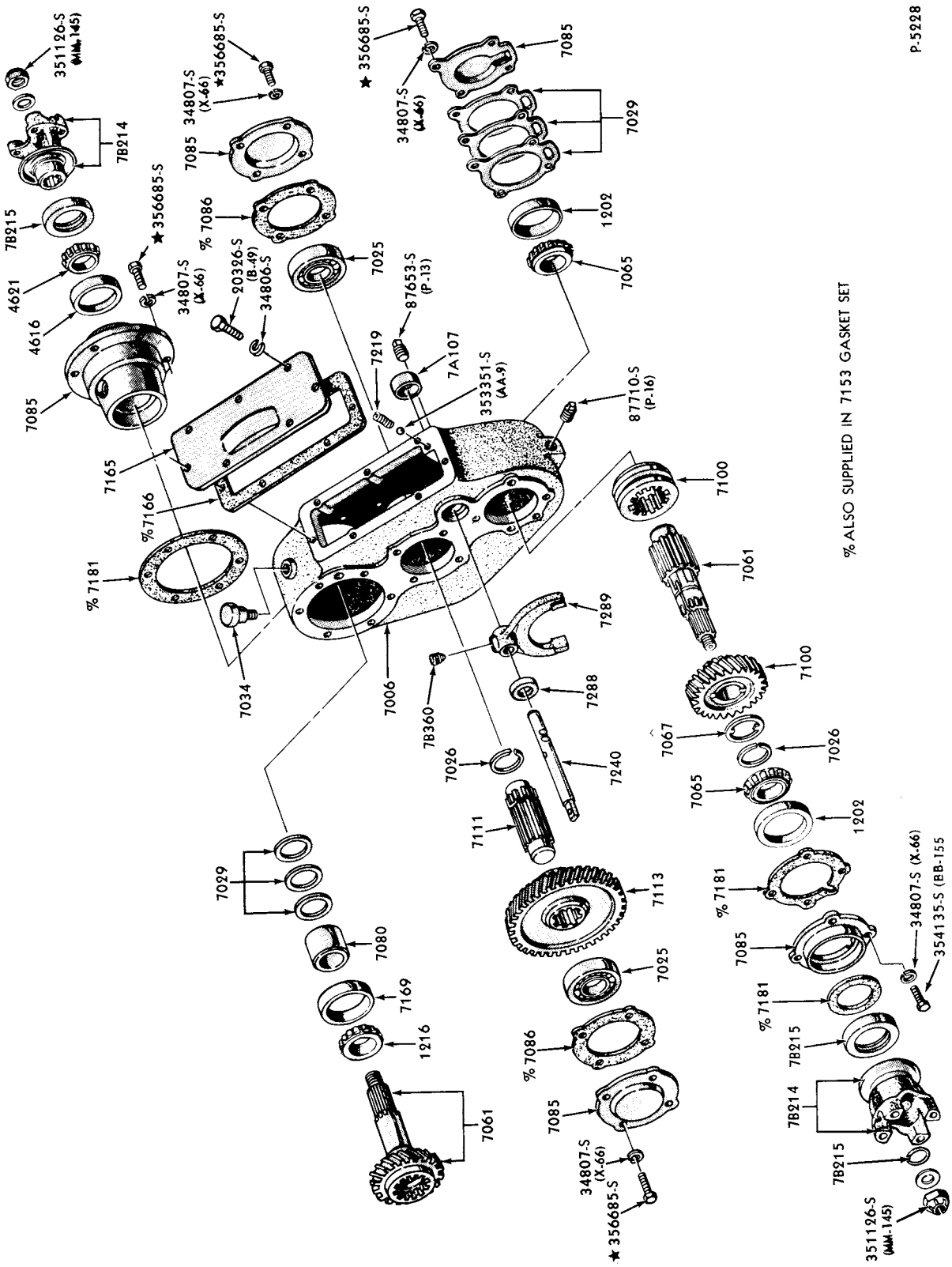

TRANSFER CASE ASSY.-DANA (SPICER)
1973/76 F100/150--4/W/D and M/T

COPYRIGHT © 1979 FORD MOTOR COMPANY, DEARBORN, MICHIGAN

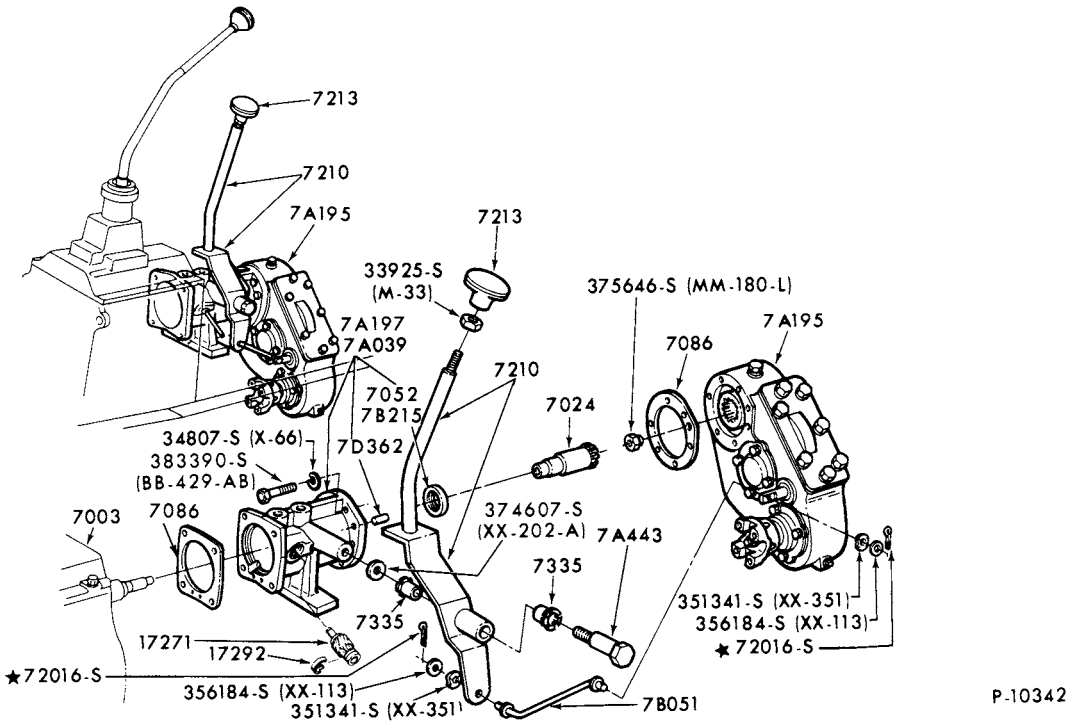

TRANSFER CASE-DANA (SPICER) GEARSHIFT MECHANISM and SUPPORTS
1973/76 F100/150--4/W/D and M/T

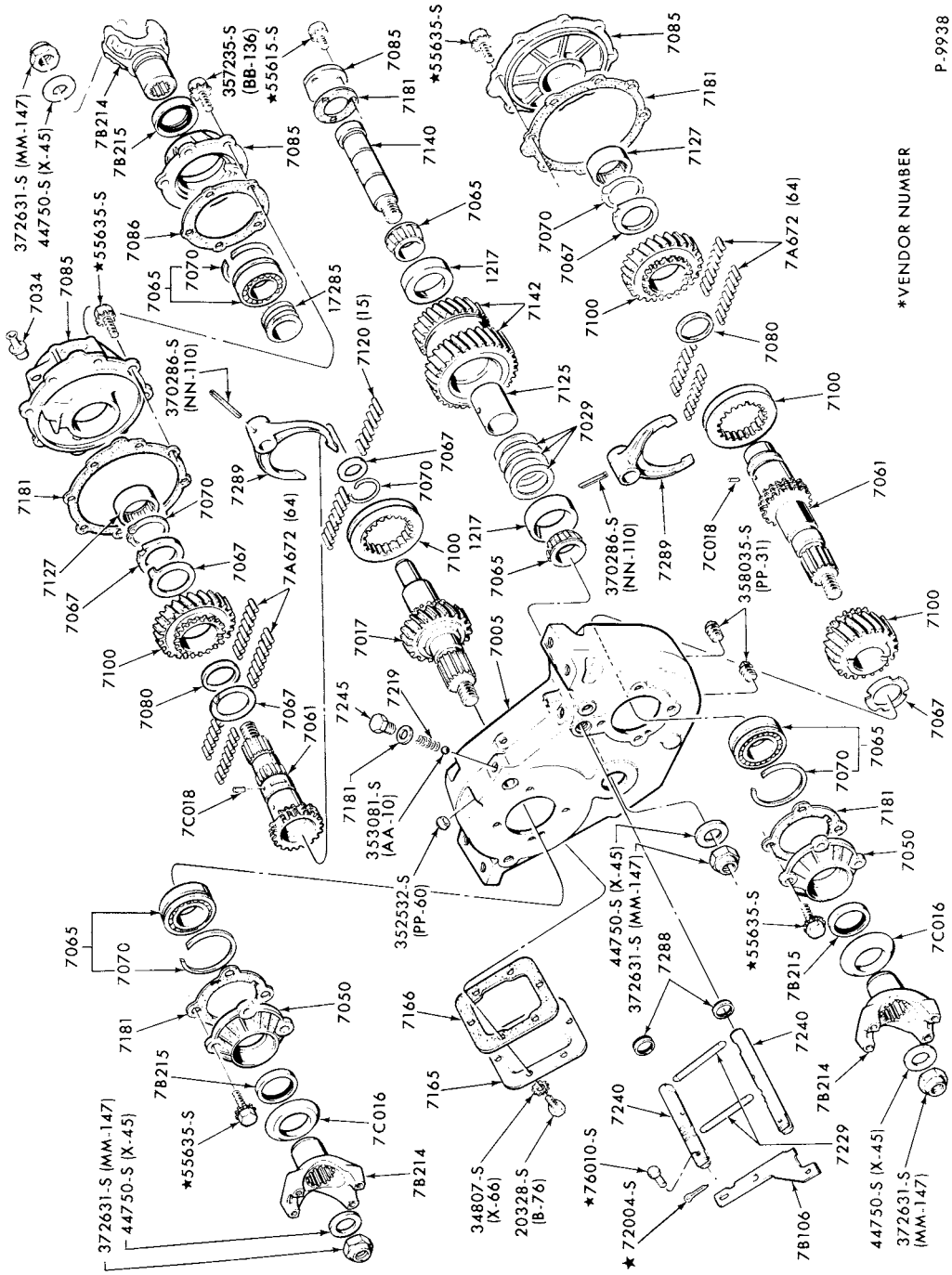

TRANSFER CASE-NEW PROCESS-PART TIME
1973/76 F250--4/W/D

COPYRIGHT © 1979 FORD MOTOR COMPANY
FORD MOTOR-DEARBORN, MICHIGAN

*385011-S

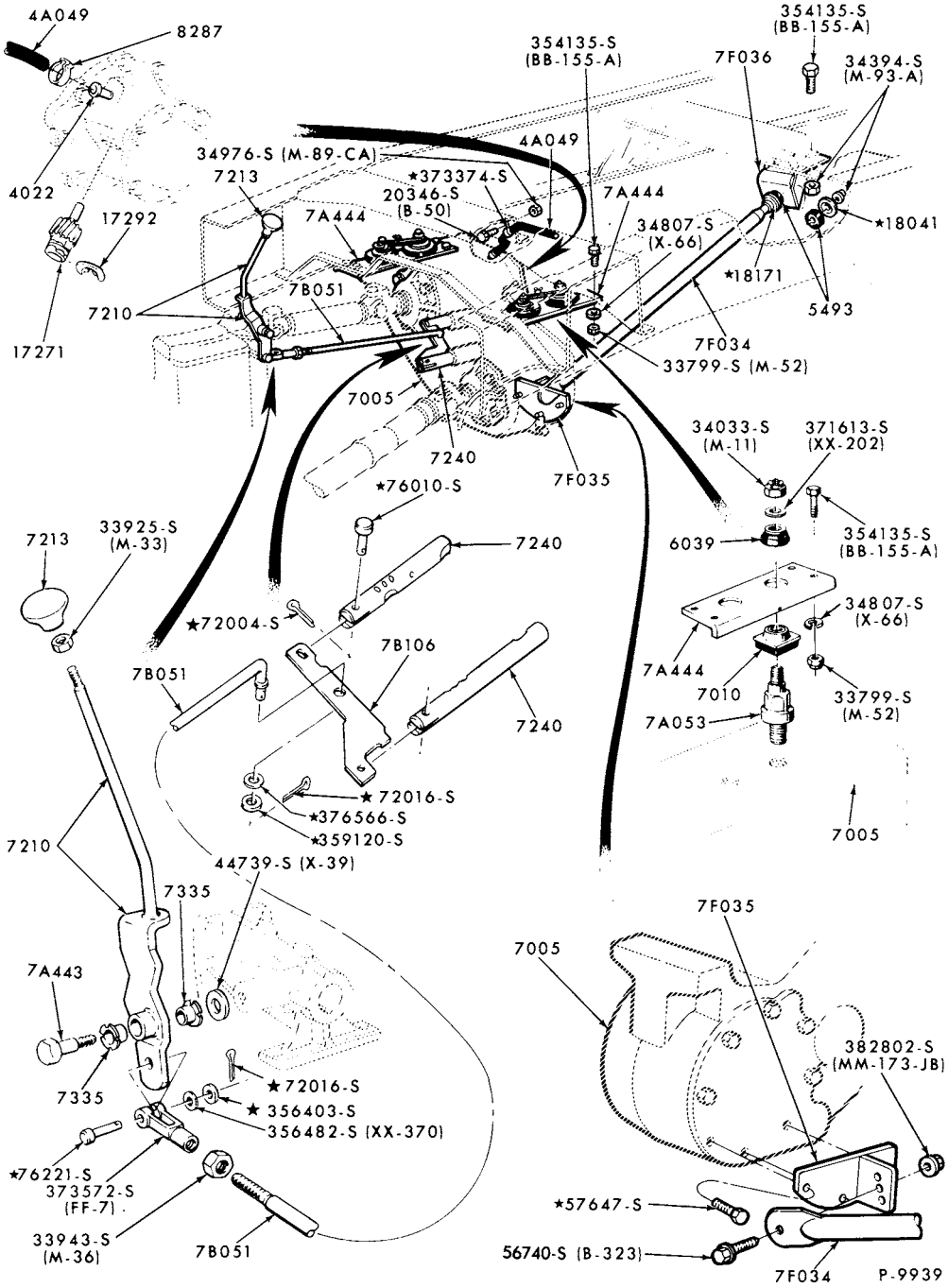

354135-S (BB-155-A)

GEARSHIFT MECHANISM and SUPPORTS

1973/77 F250--4/W/D - PART TIME - "BEFORE SER.X80,001"

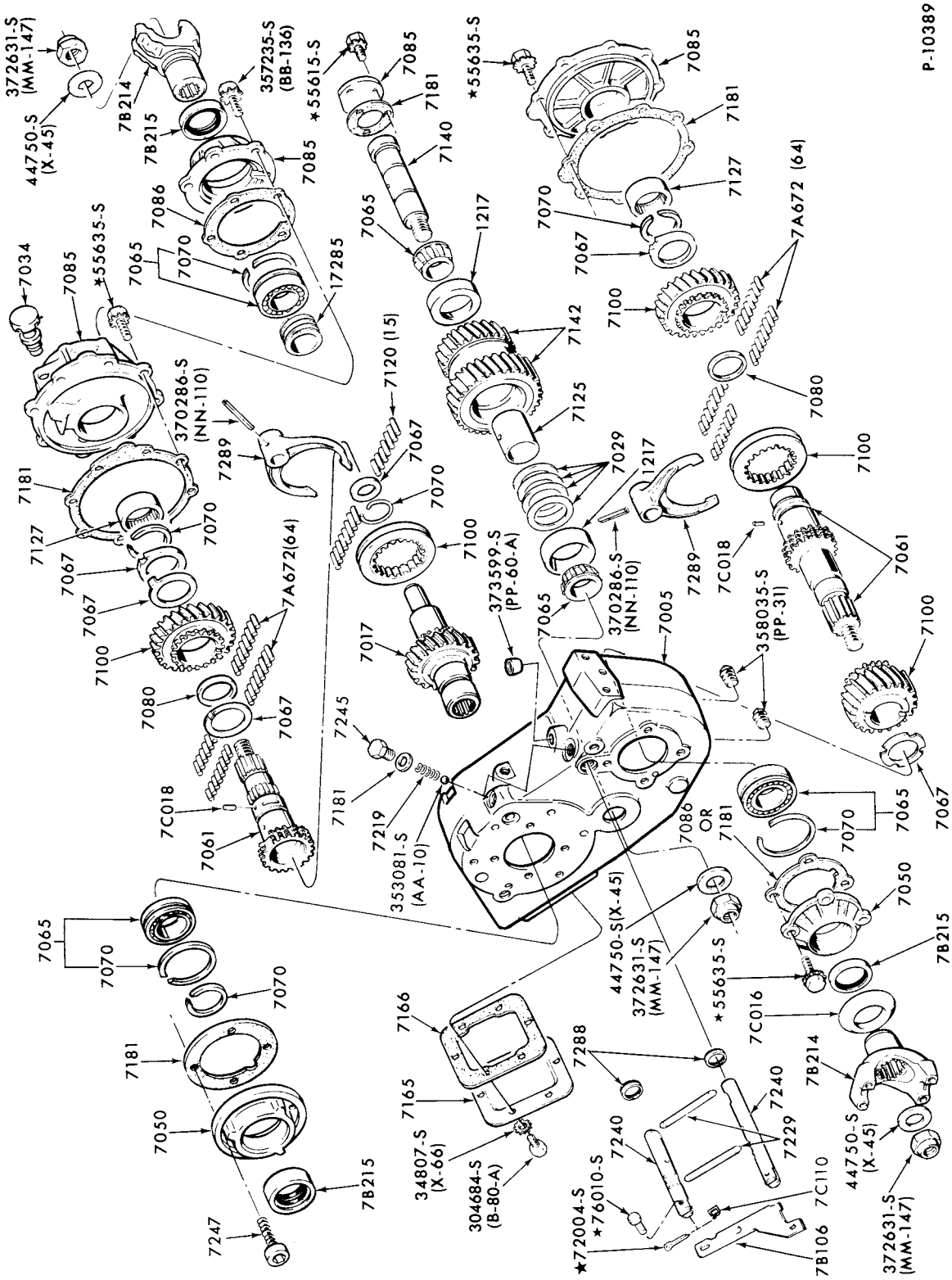

TRANSFER CASE-NEW PROCESS-PART TIME
1973/74 F100--4/W/D - A/T
1975/76 F100--4/W/D - M/T and 1977/ F150/350--4/W/D

COPYRIGHT © 1979 FORD MOTOR COMPANY - DEARBORN, MICHIGAN

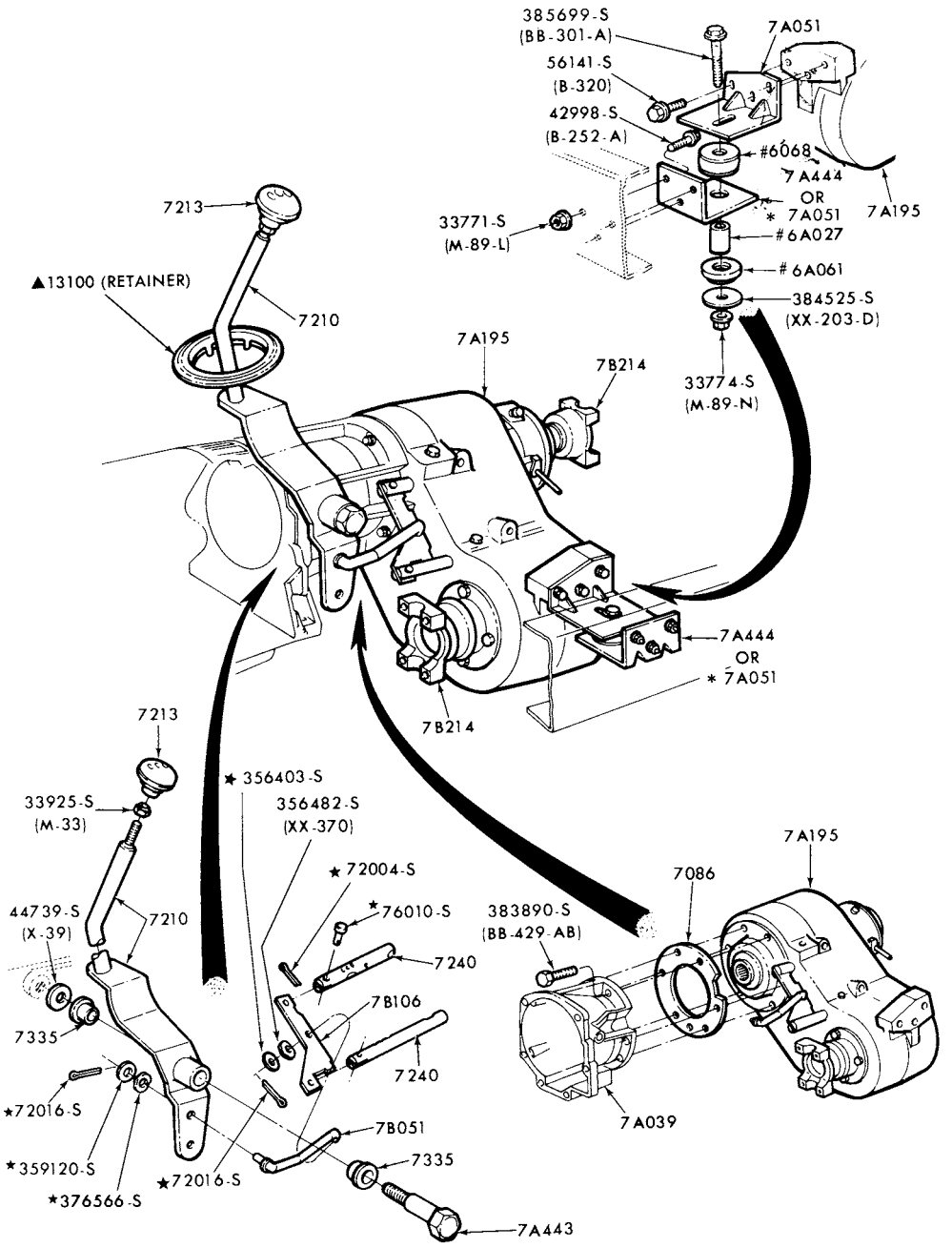

TRANSFER CASE-GEARSHIFT MECHANISM and SUPPORTS-PART TIME
1973/74 F100--4/W/D and A/T. 1975/ F100/150--4/W/D and M/T,
1977/ F150--4/W/D and A/T
1977/ F250/350--4/W/D--A/T - FULL TIME - "FROM SER. X80,001"
1979 F350--4/W/D--A/T and M/T - PART TIME

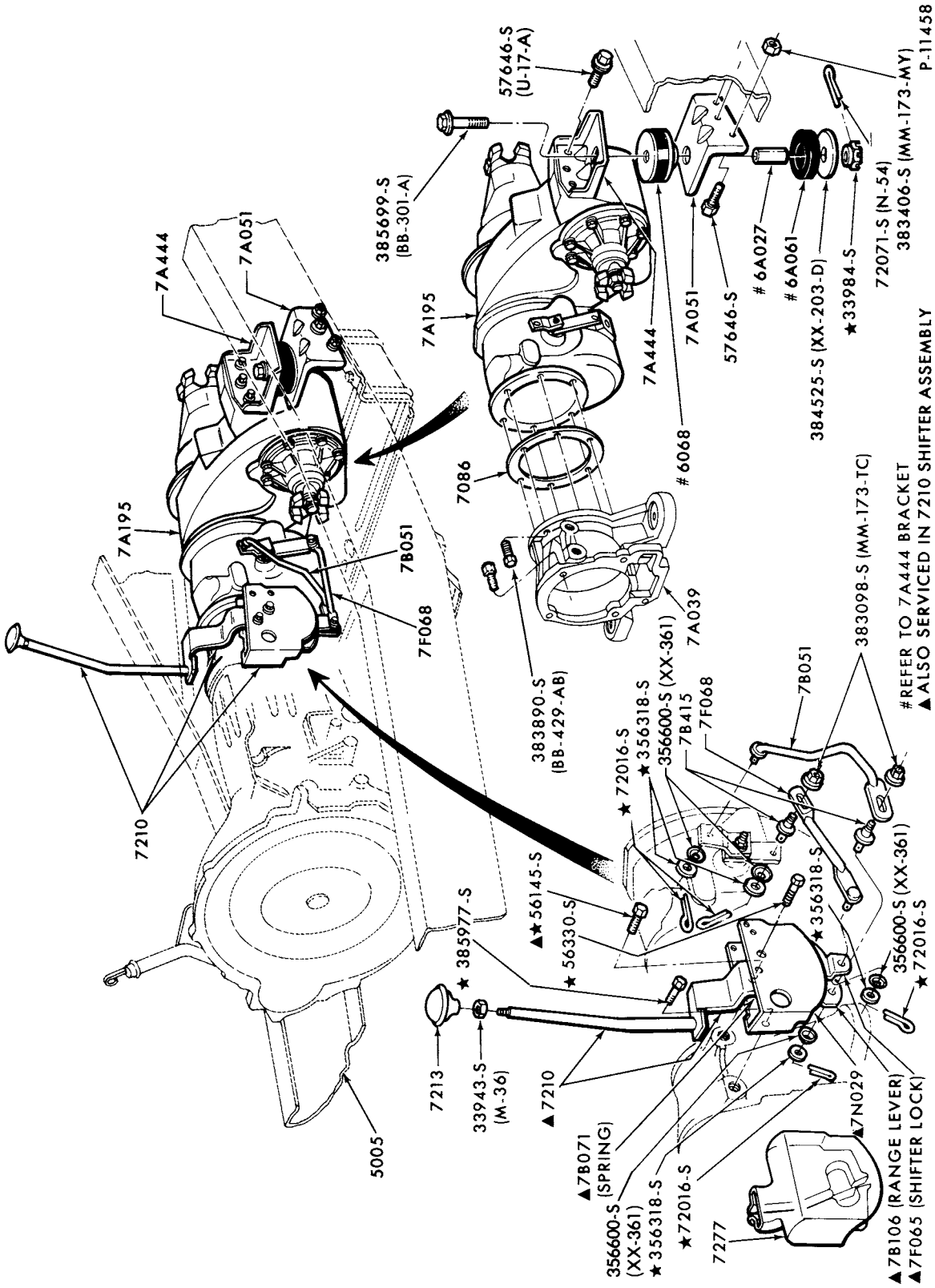

TRANSFER CASE GEARSHIFT MECHANISM and SUPPORTS
1974/76 F100/150--4/W/D and A/T - FULL TIME

COPYRIGHT © 1979 FORD MOTOR COMPANY DEARBORN, MICHIGAN

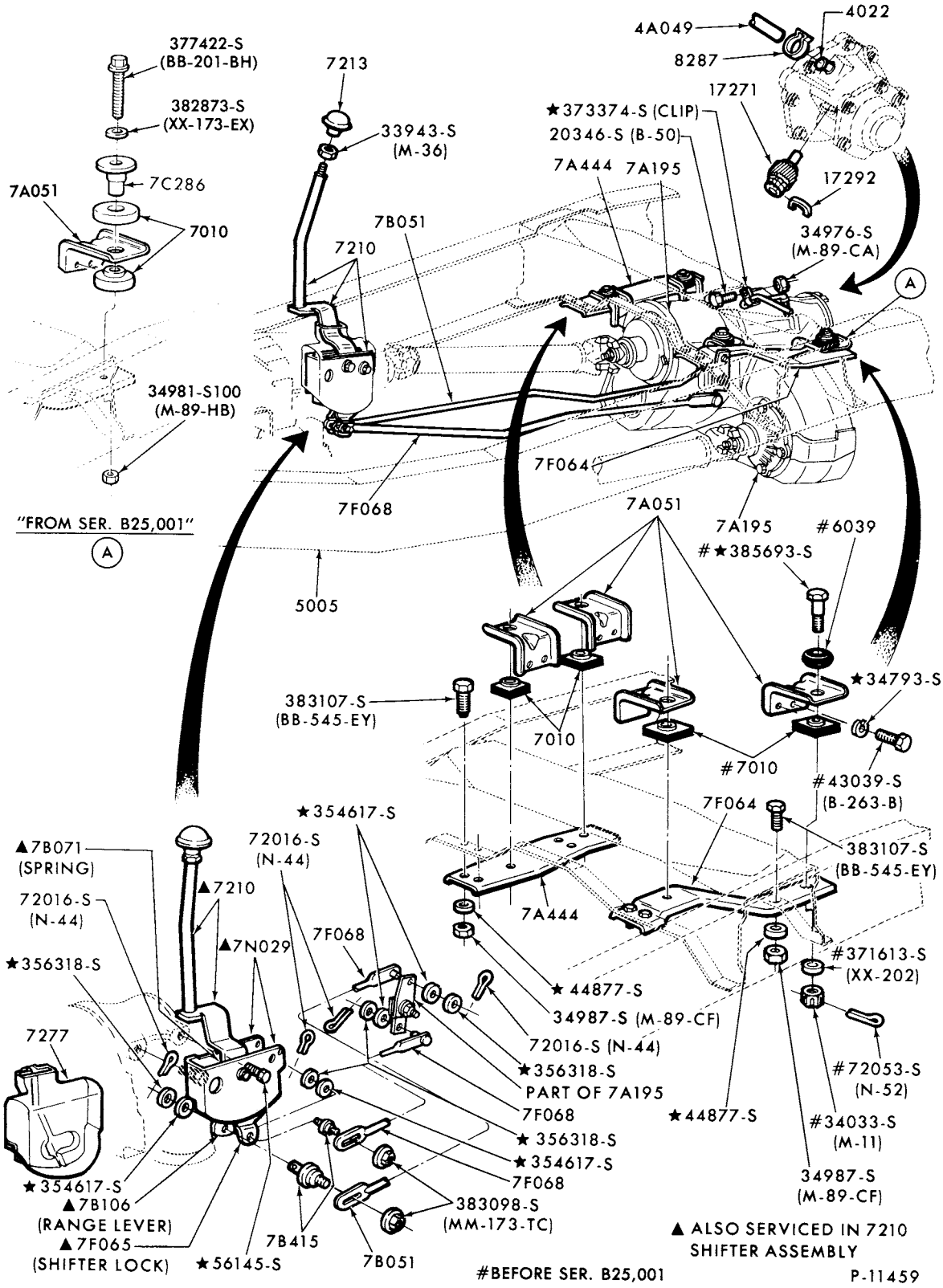

TRANSFER CASE GEARSHIFT MECHANISM and SUPPORTS
1974/77 F250--4/W/D and A/T - FULL TIME - "BEFORE SER. X80,001"

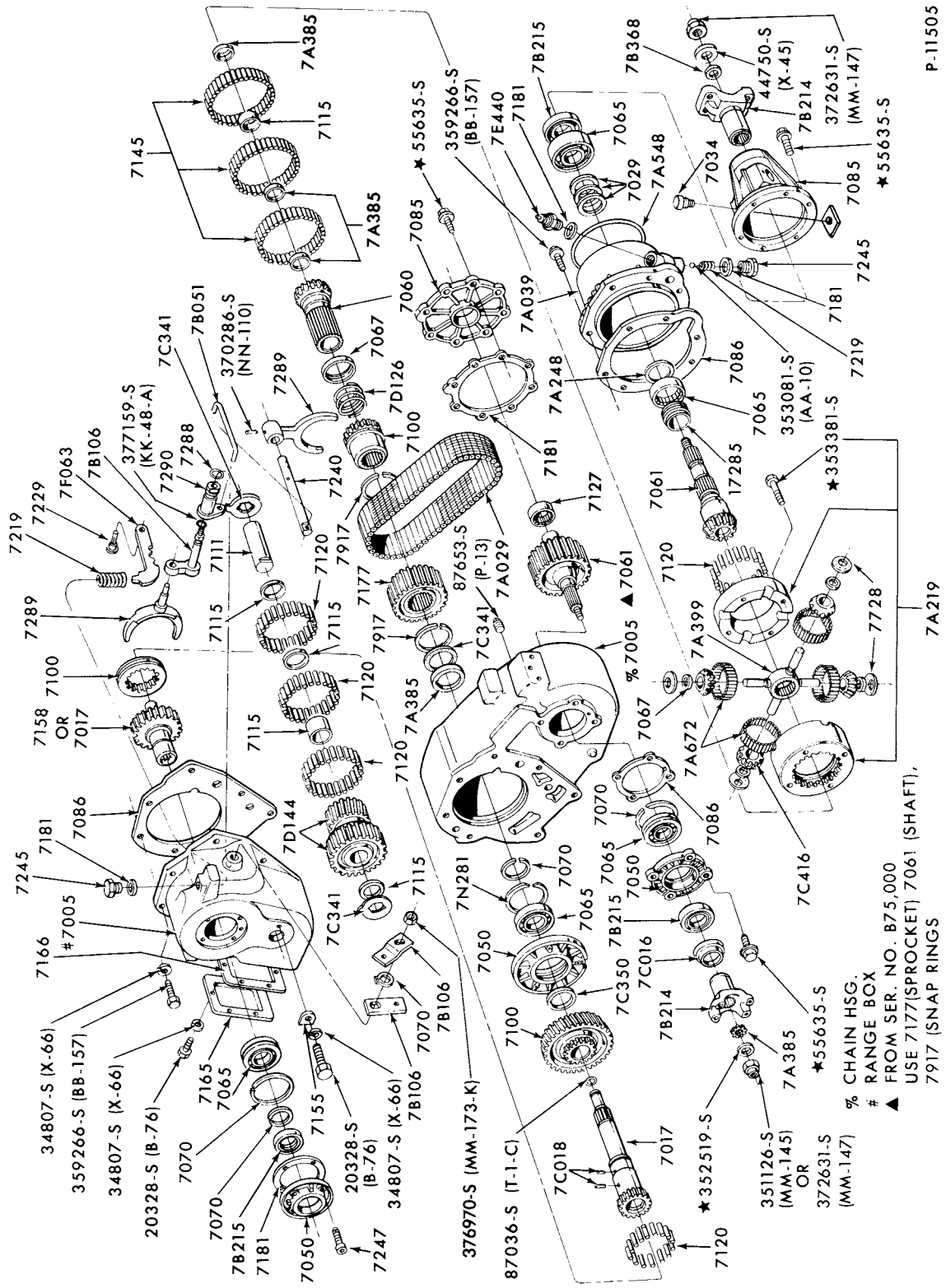

TRANSFER CASE - NEW PROCESS - FULL TIME
1974/78 F100/150--4/W/D-A/T-"BEFORE SER. A60,001"
1977/78 F250--4/W/D-A/T-"BEFORE SER. A60,001"

COPYRIGHT © 1979 FORD MOTOR COMPANY · DEARBORN, MICHIGAN

1973/79
TRUCK SERIES 100/500

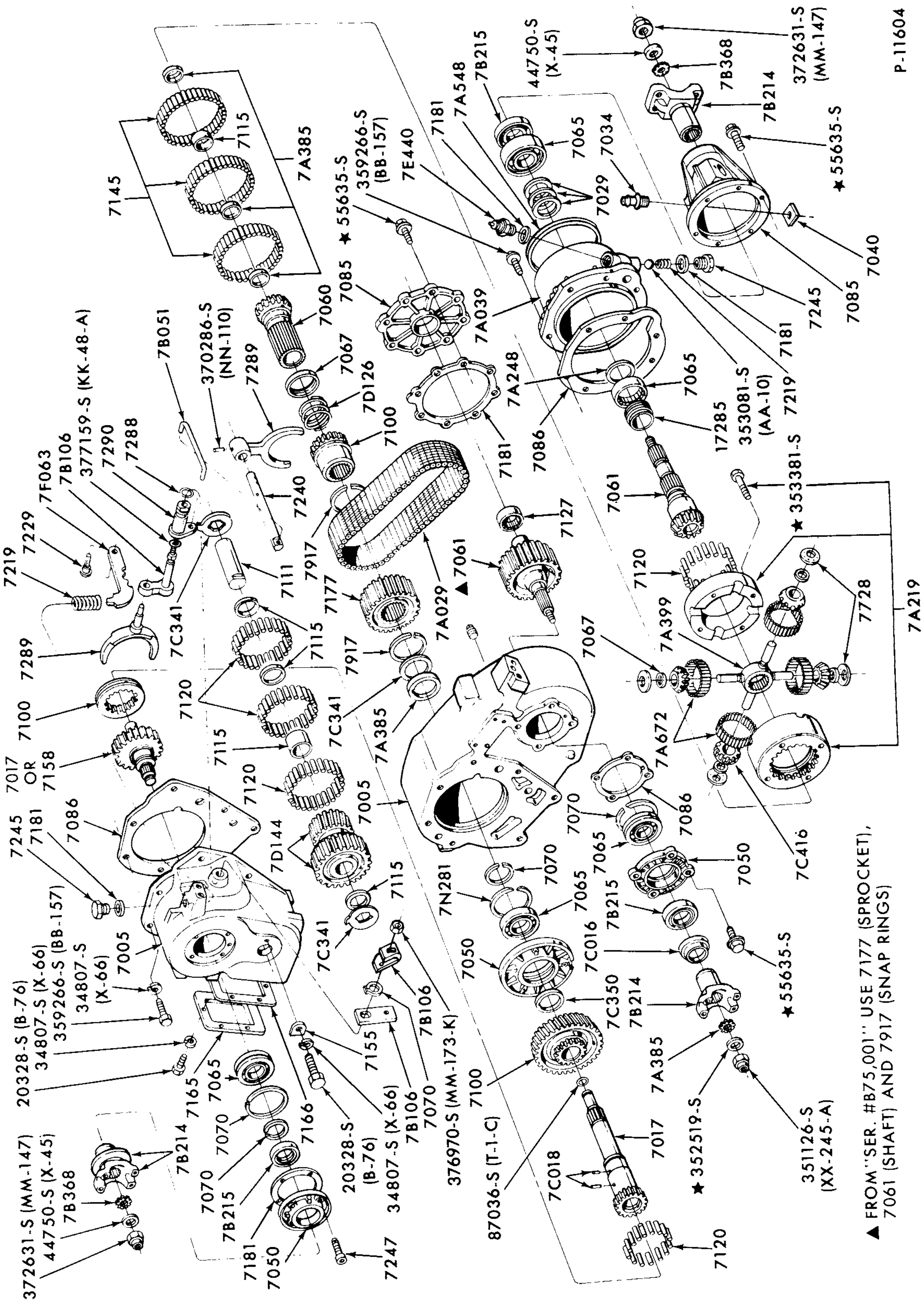

TRANSFER CASE - NEW PROCESS - FULL TIME
1974/76 F250--4/W/D-A/T

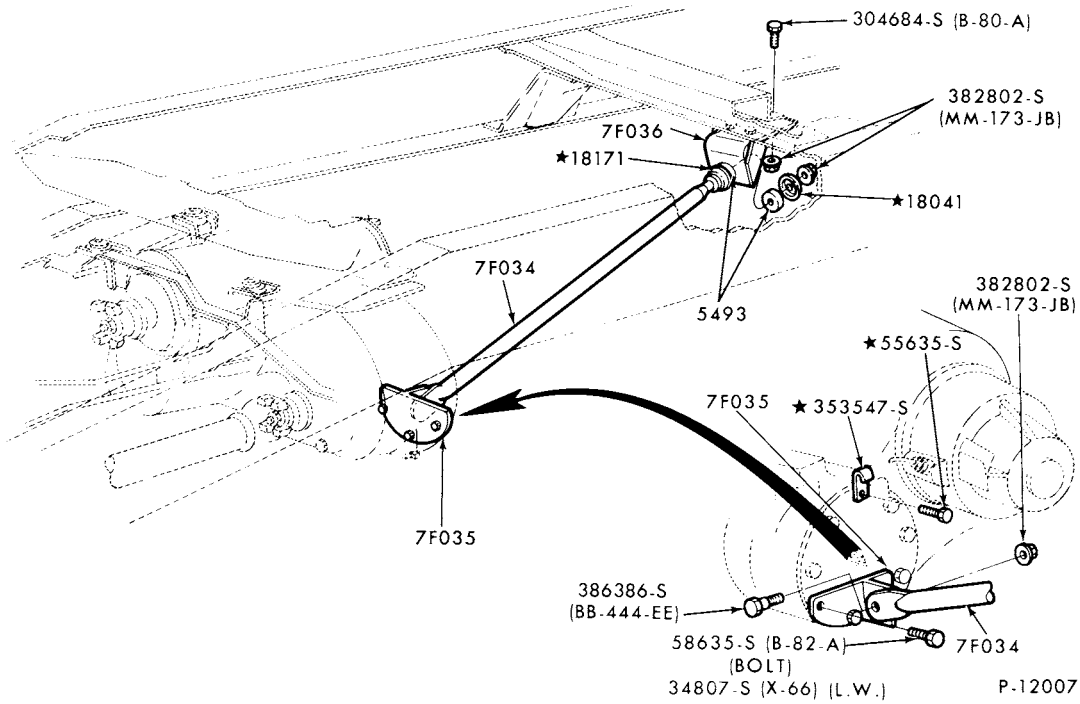

TRANSFER CASE STABILIZER BAR
1974/77 F250--4/W/D--A/T

COPYRIGHT © 1979 FORD MOTOR COMPANY DEARBORN, MICHIGAN

1973/79 TRUCK SERIES 100/500

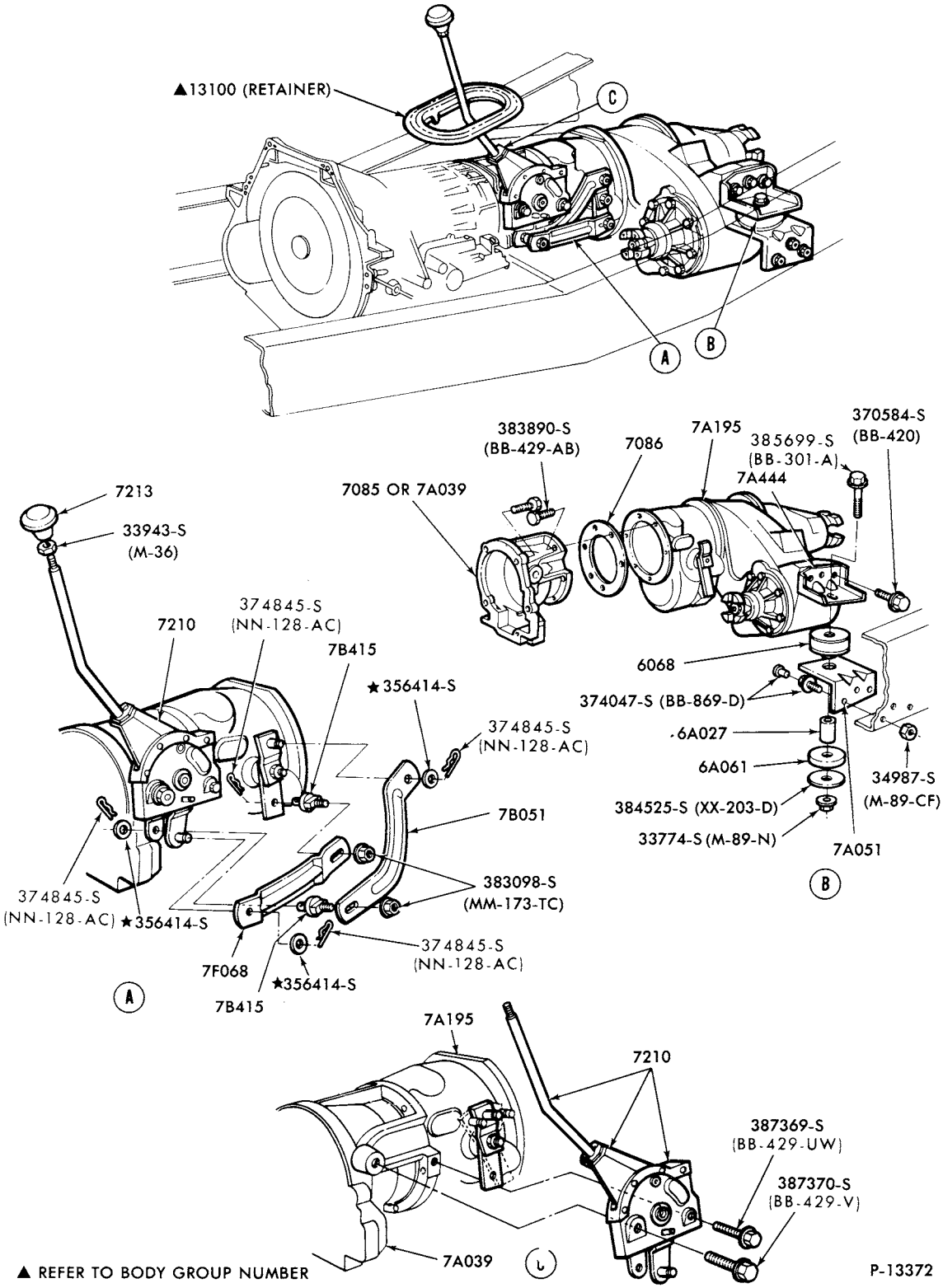

TRANSFER CASE GEARSHIFT MECHANISM
1977/ F150--4/W/D--A/T - FULL TIME
1977/ F250/350--4/W/D--A/T - FULL TIME - "FROM SER. X80,001
1979 F350--4/W/D--A/T - FULL TIME

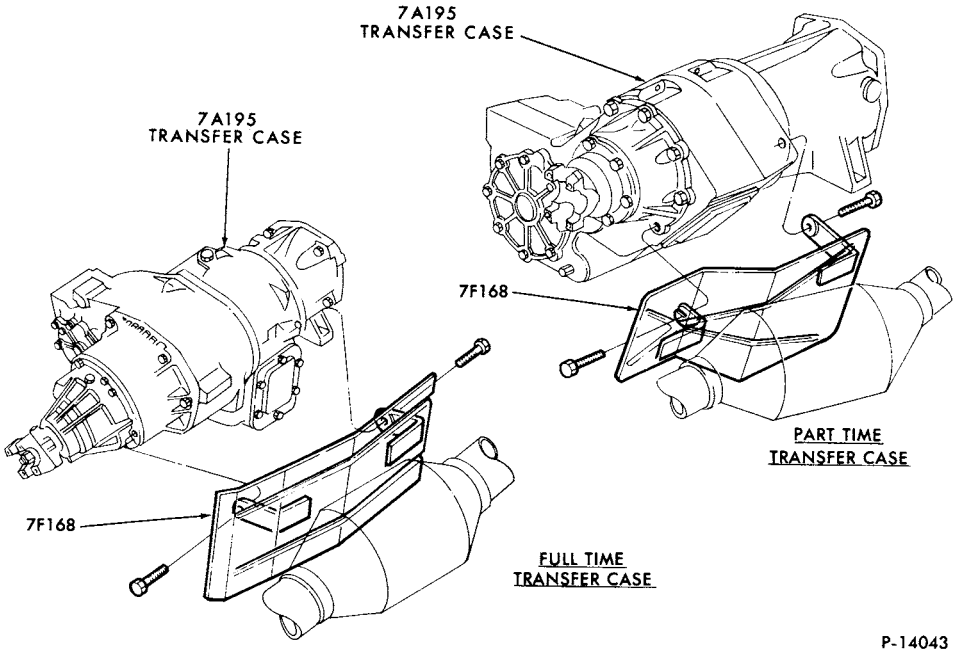

HEAT SHIELD-TRANSFER CASE
1978/ F150/250

COPYRIGHT © 1979 FORD MOTOR-DEARBORN, MICHIGAN
COMPANY

1973/79 TRUCK SERIES 100/500

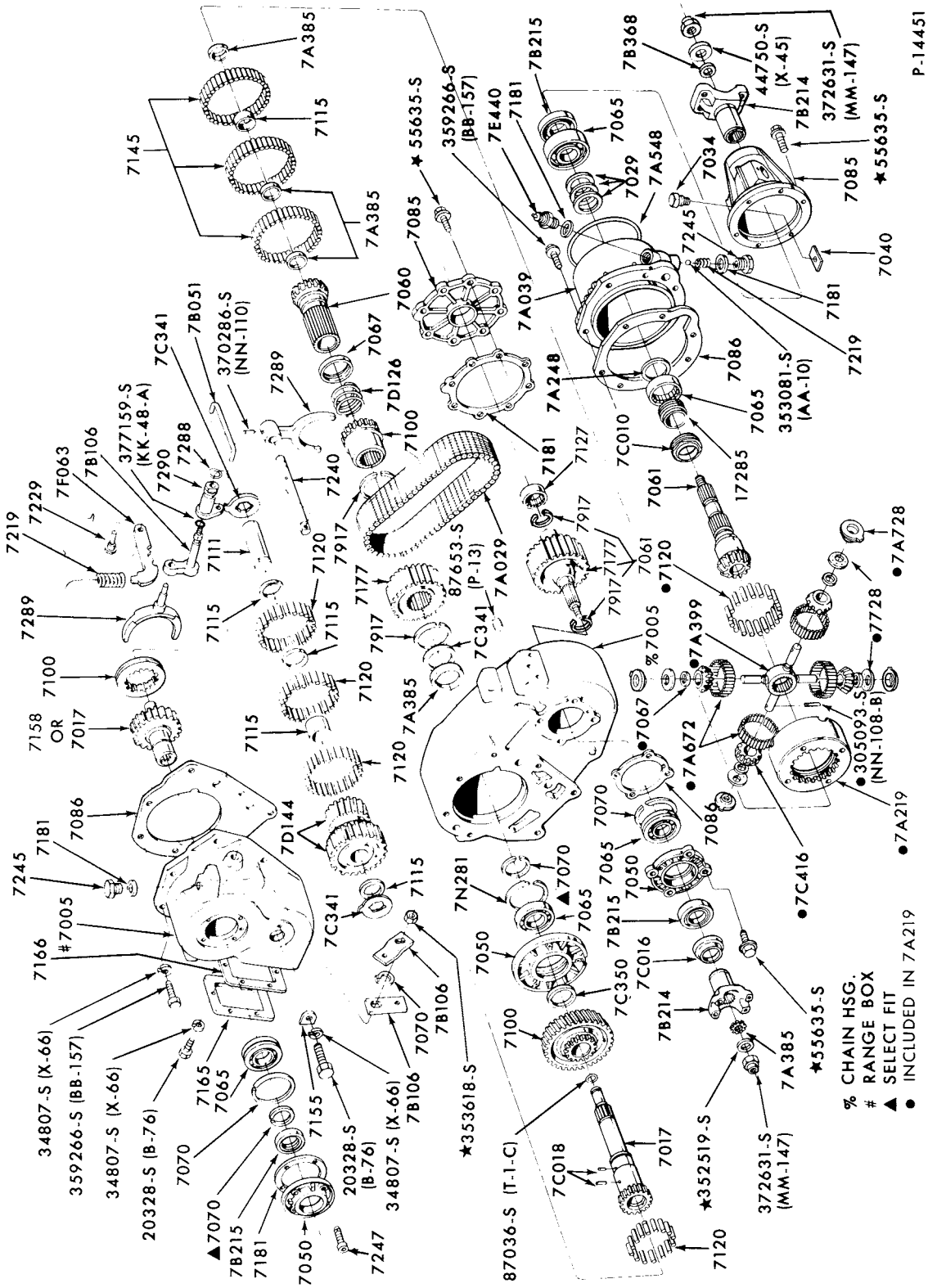

TRANSFER CASE - NEW PROCESS - FULL TIME
1978/ F150/350--A/T-"FROM SER. A60,001"

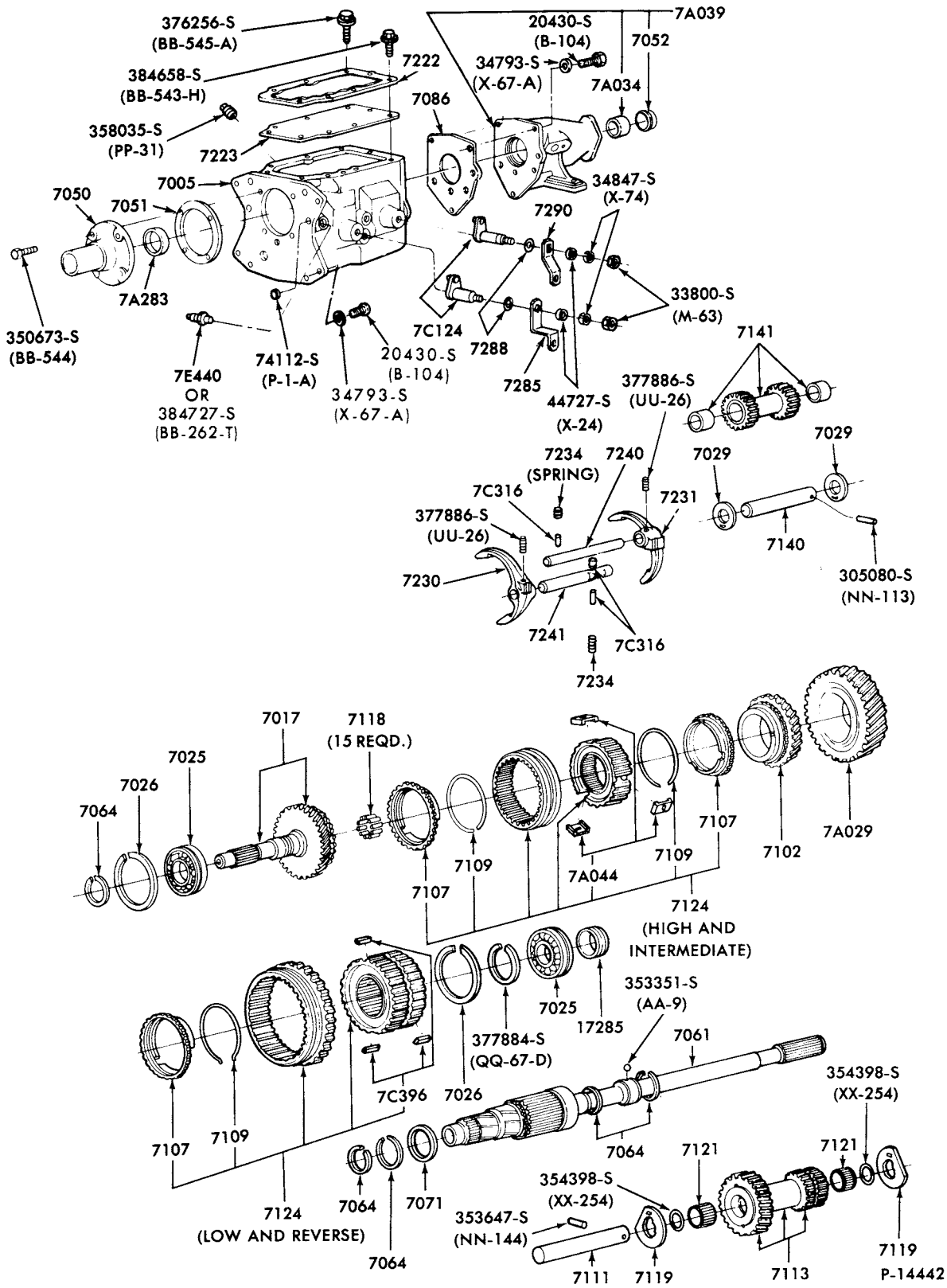

TRANSMISSION ASSY. (3 SPEED SYNCHRO.)-FORD 303-TYPICAL
1973/ E100/350 and F100/250

COPYRIGHT © 1979 FORD MOTOR COMPANY—DEARBORN, MICHIGAN

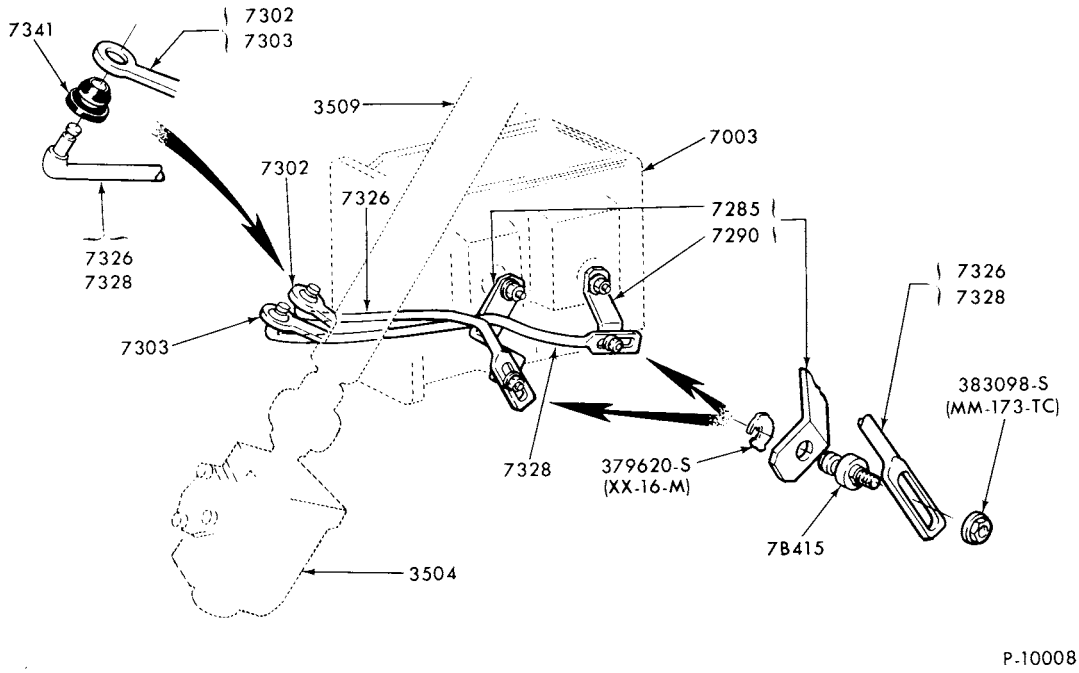

GEARSHIFT MECHANISM (3 SPEED)
1973/ F100/250

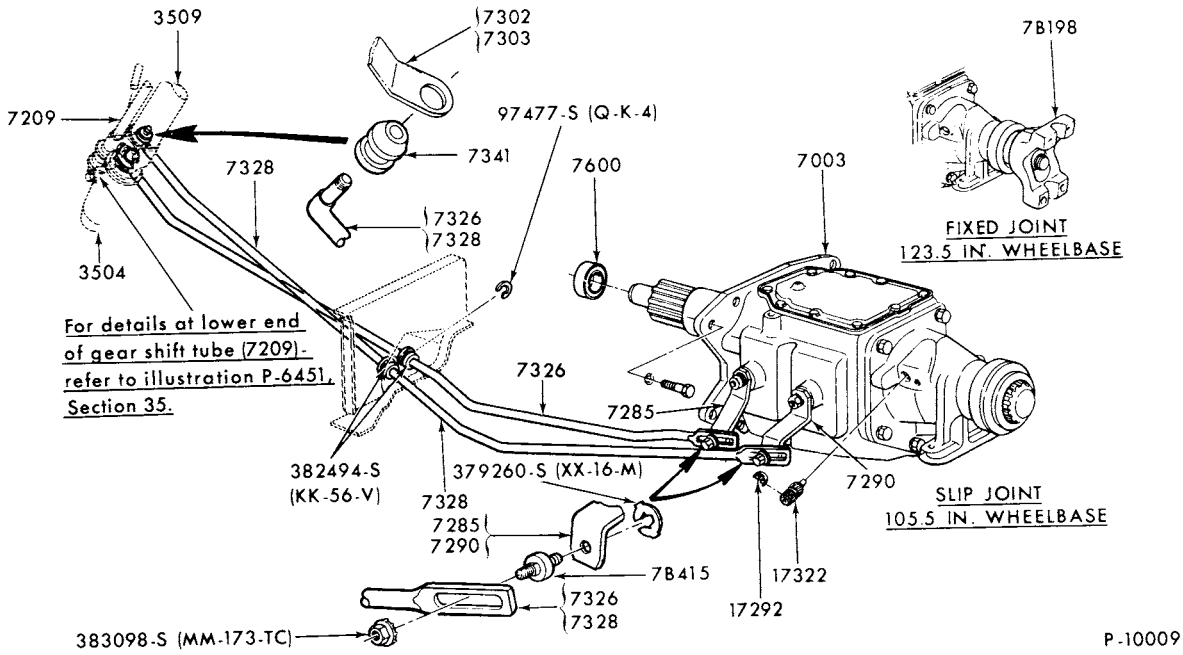

TRANSMISSION GEARSHIFT MECHANISM (REMOTE CONTROL)-TYPICAL
1973/74 E100/300

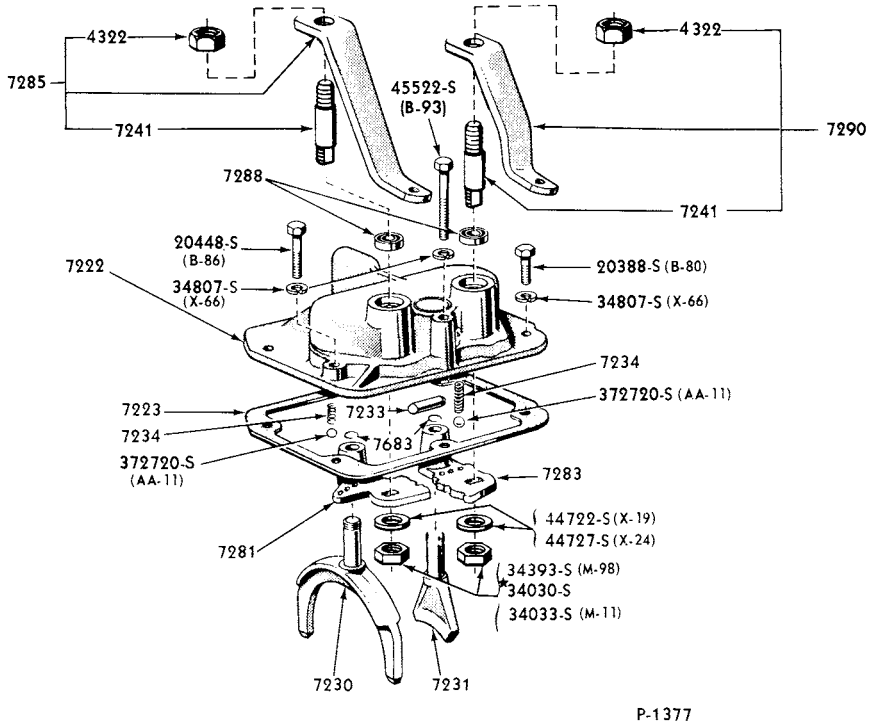

GEARSHIFT HOUSING, LEVERS and FORKS (3 SPEED)-WARNER GEAR T87G-TYPICAL
1973/75 P350/500

COPYRIGHT © 1979 FORD MOTOR COMPANY DEARBORN, MICHIGAN

1973/79 TRUCK SERIES 100/500

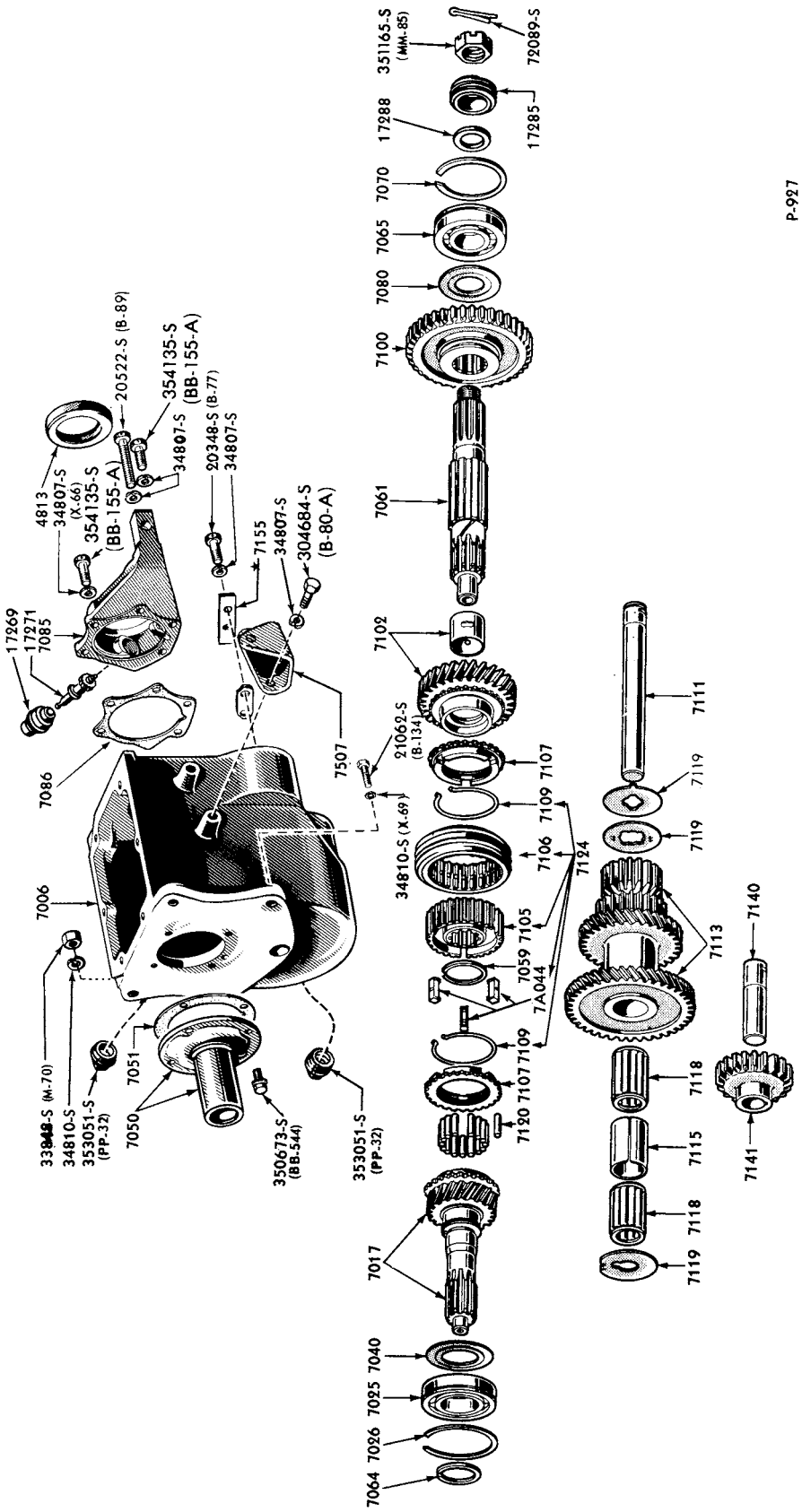

TRANSMISSION ASSY. (3 SPEED)-WARNER GEAR T87G-TYPICAL
1973/75 P350/500

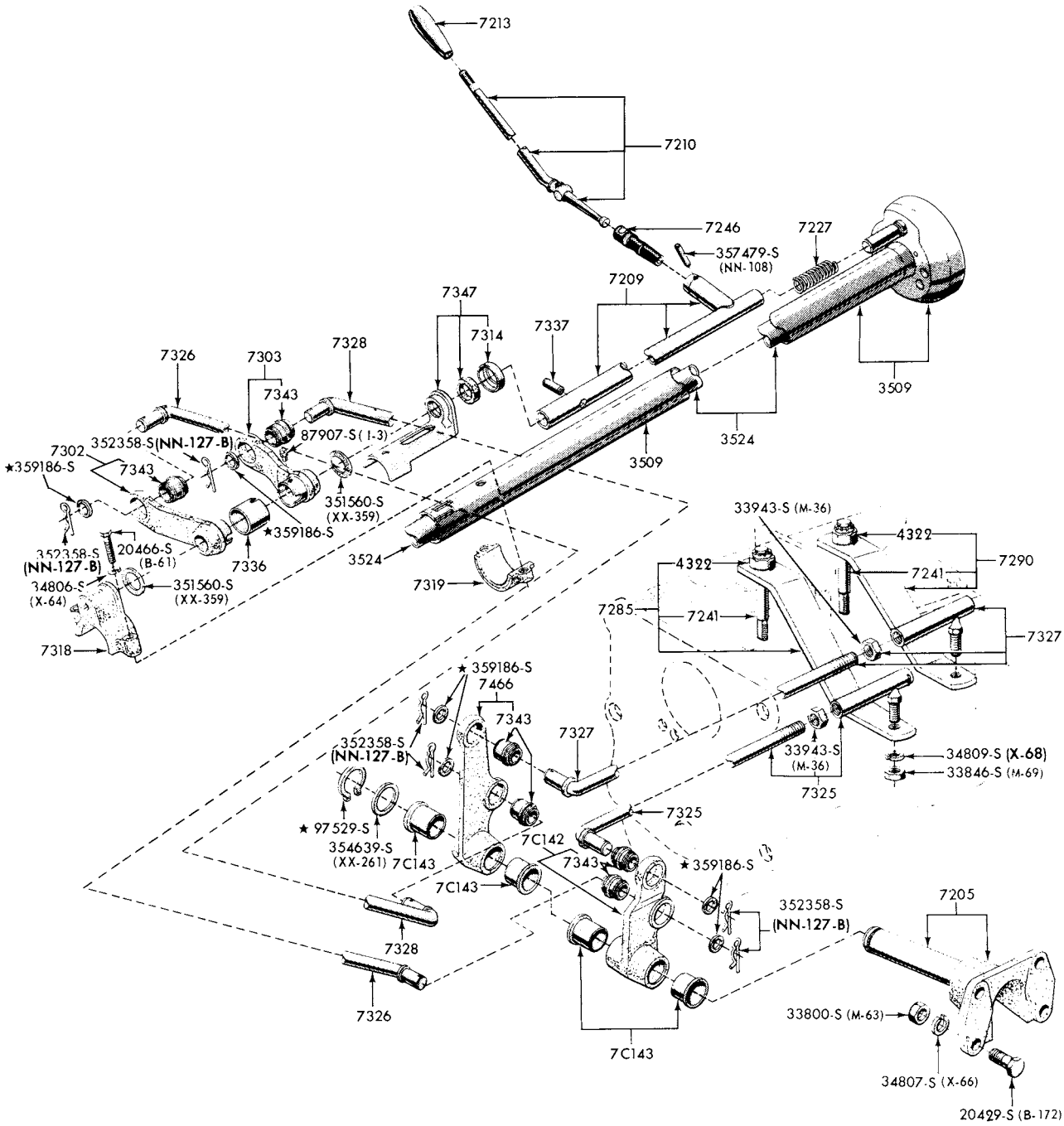

P-3636

GEARSHIFT MECHANISM (3 SPEED)-WARNER GEAR T87G-TYPICAL
1973/75 P350/500

COPYRIGHT © 1979 FORD MOTOR COMPANY - DEARBORN, MICHIGAN

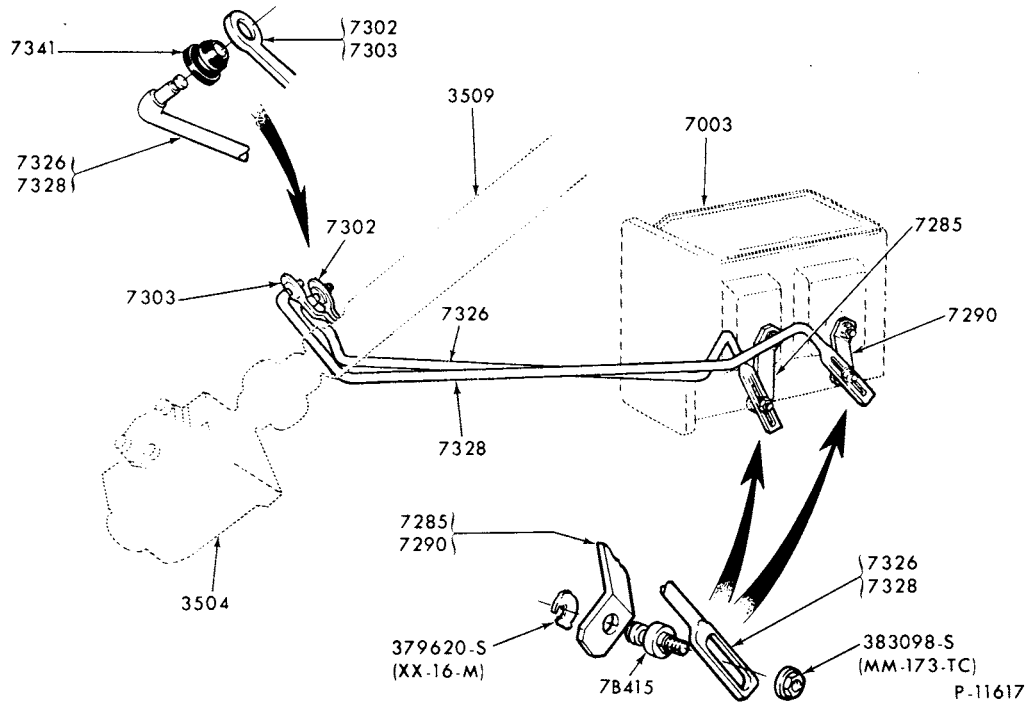

TRANSMISSION GEARSHIFT MECHANISM-REMOTE CONTROL-TYPICAL
1975/ E100/350

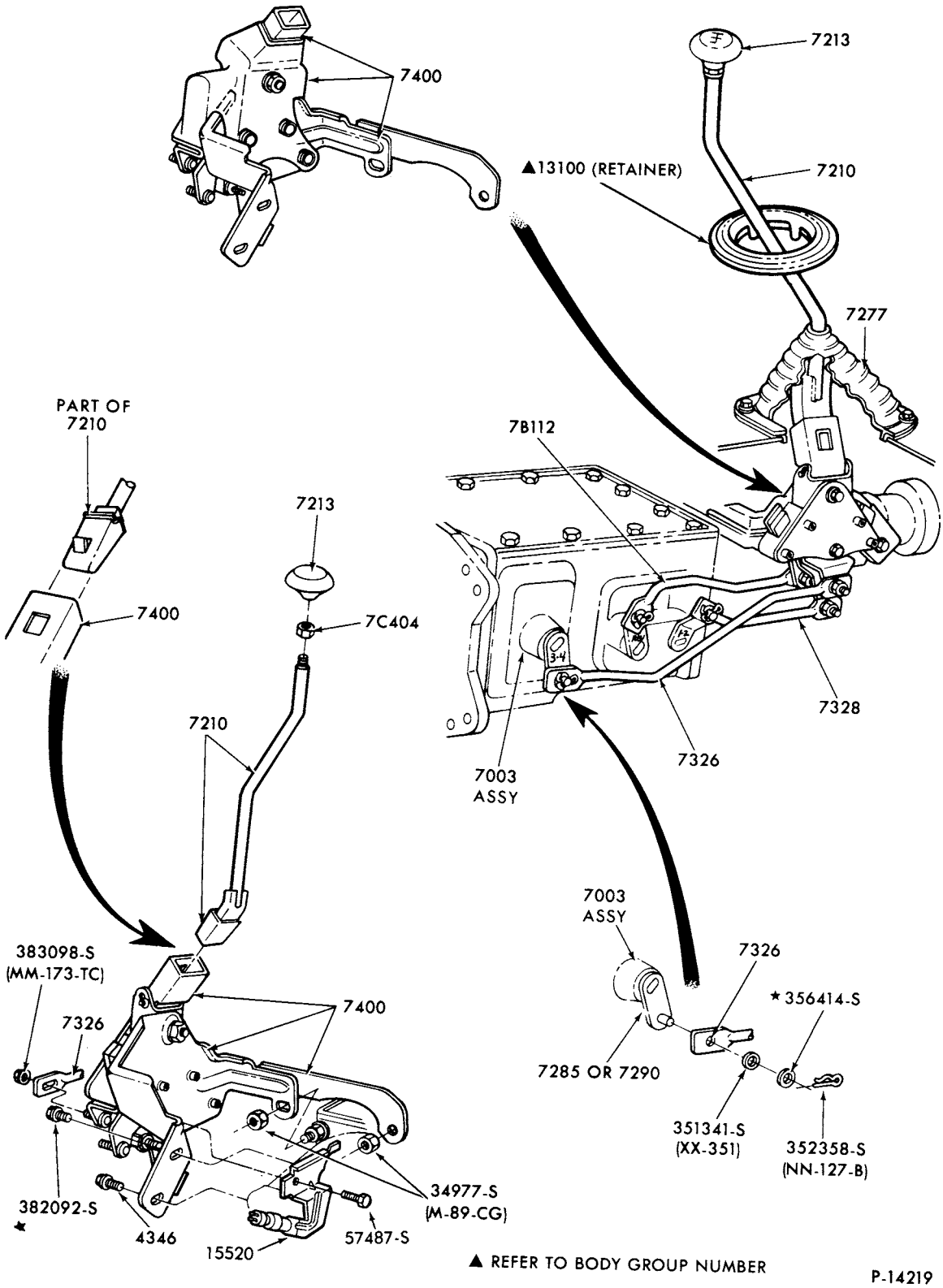

GEARSHIFT MECHANISM (4 SPEED)-OVERDRIVE
1978/ E100/350

COPYRIGHT © 1980 FORD MOTOR COMPANY - DEARBORN, MICHIGAN

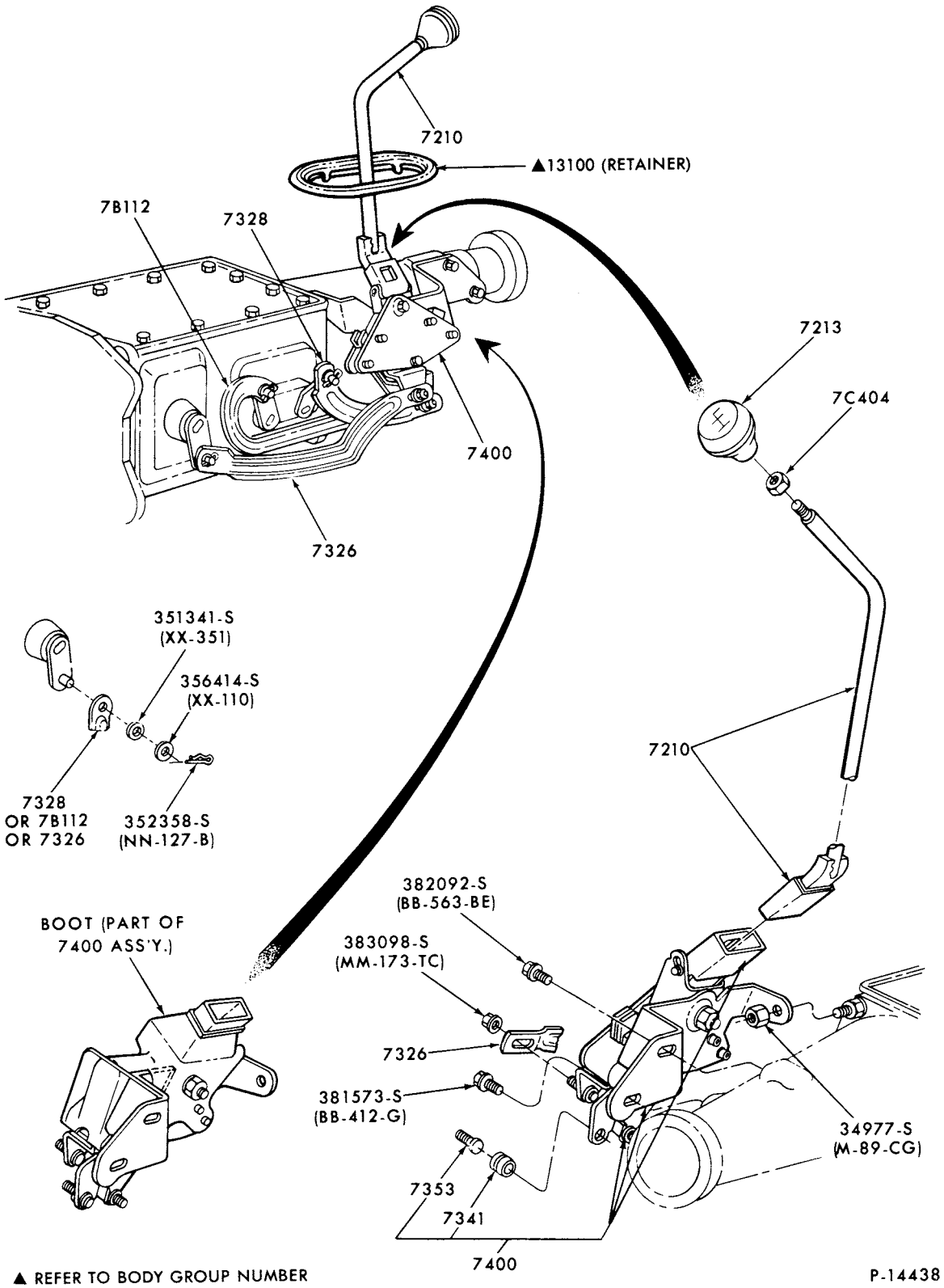

GEARSHIFT MECHANISM (4 SPEED)-OVERDRIVE
1978/79 F100/250

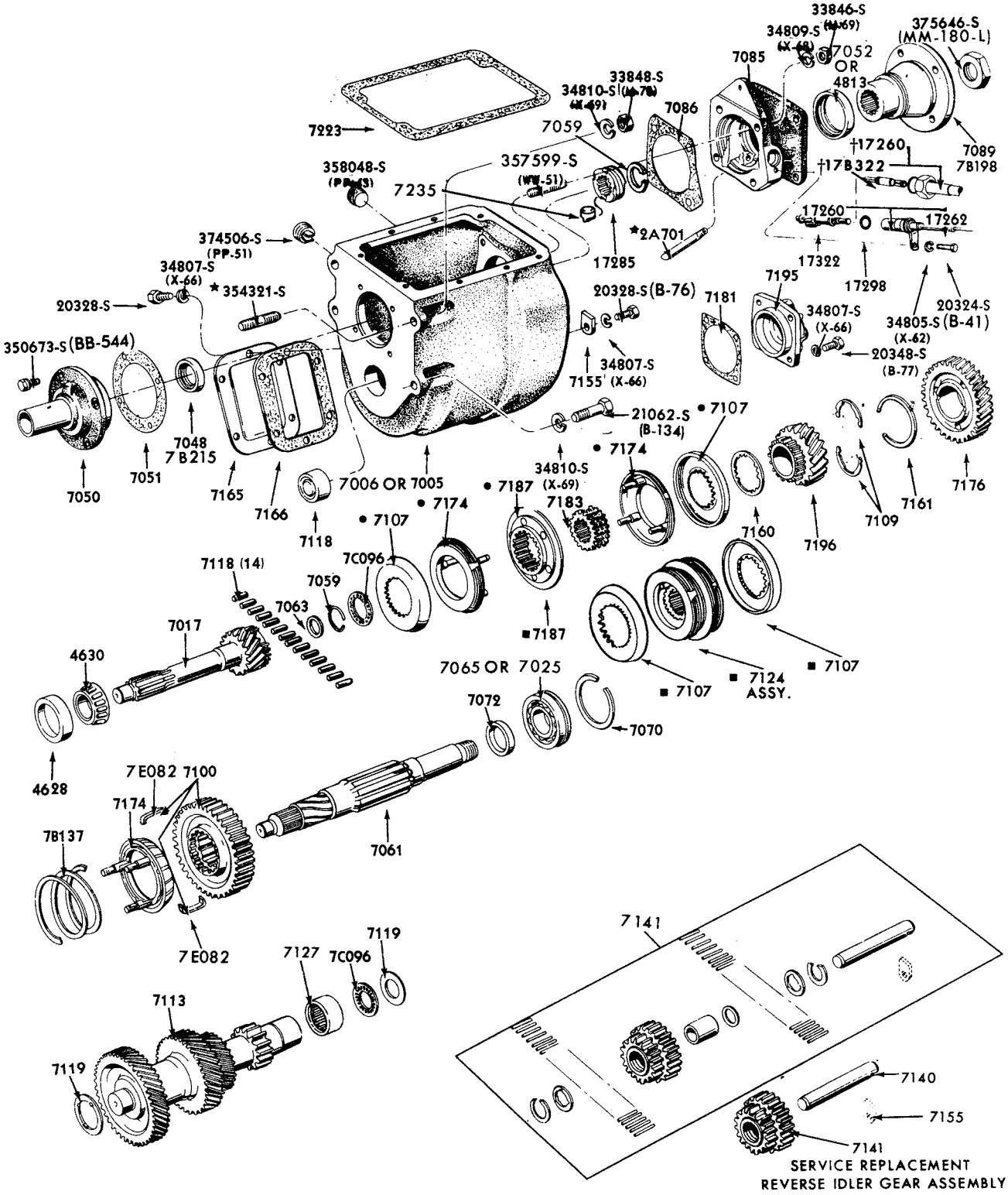

• BEFORE SERIAL Q80,001
■ FROM SERIAL Q80,001

TRANSMISSION ASSY. (4 SPEED HELICAL GEAR)-NEW PROCESS 435
1973/ F100/350 and 1973/77 B-F500

COPYRIGHT © 1980 FORD MOTOR COMPANY, DEARBORN, MICHIGAN

1973/79 TRUCK SERIES 100/500

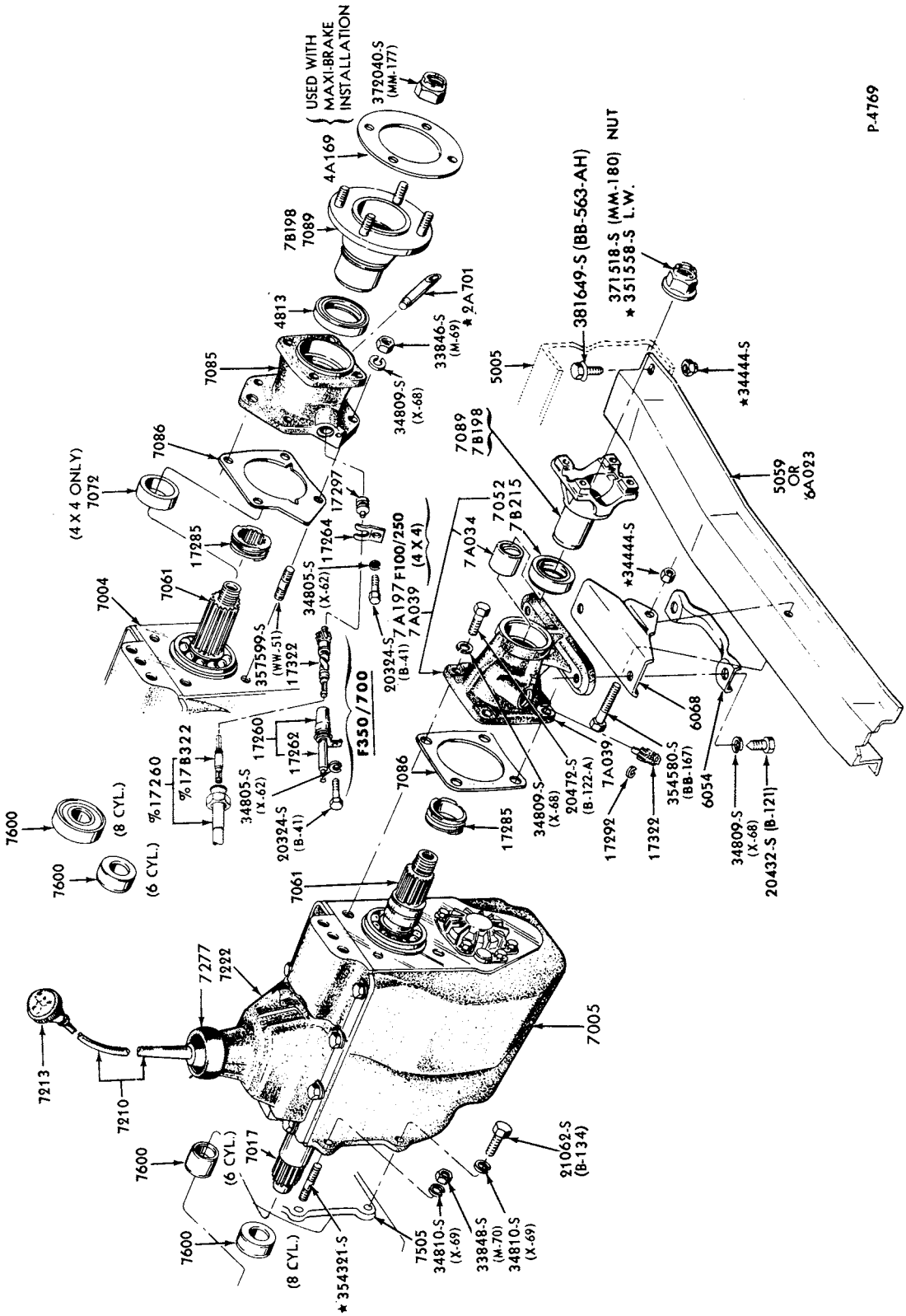

TRANSMISSION SUPPORTS (4 SPEED HELICAL GEAR)-NEW PROCESS 435
1973/ F100/350 and 1973/77 B-F-P350/500

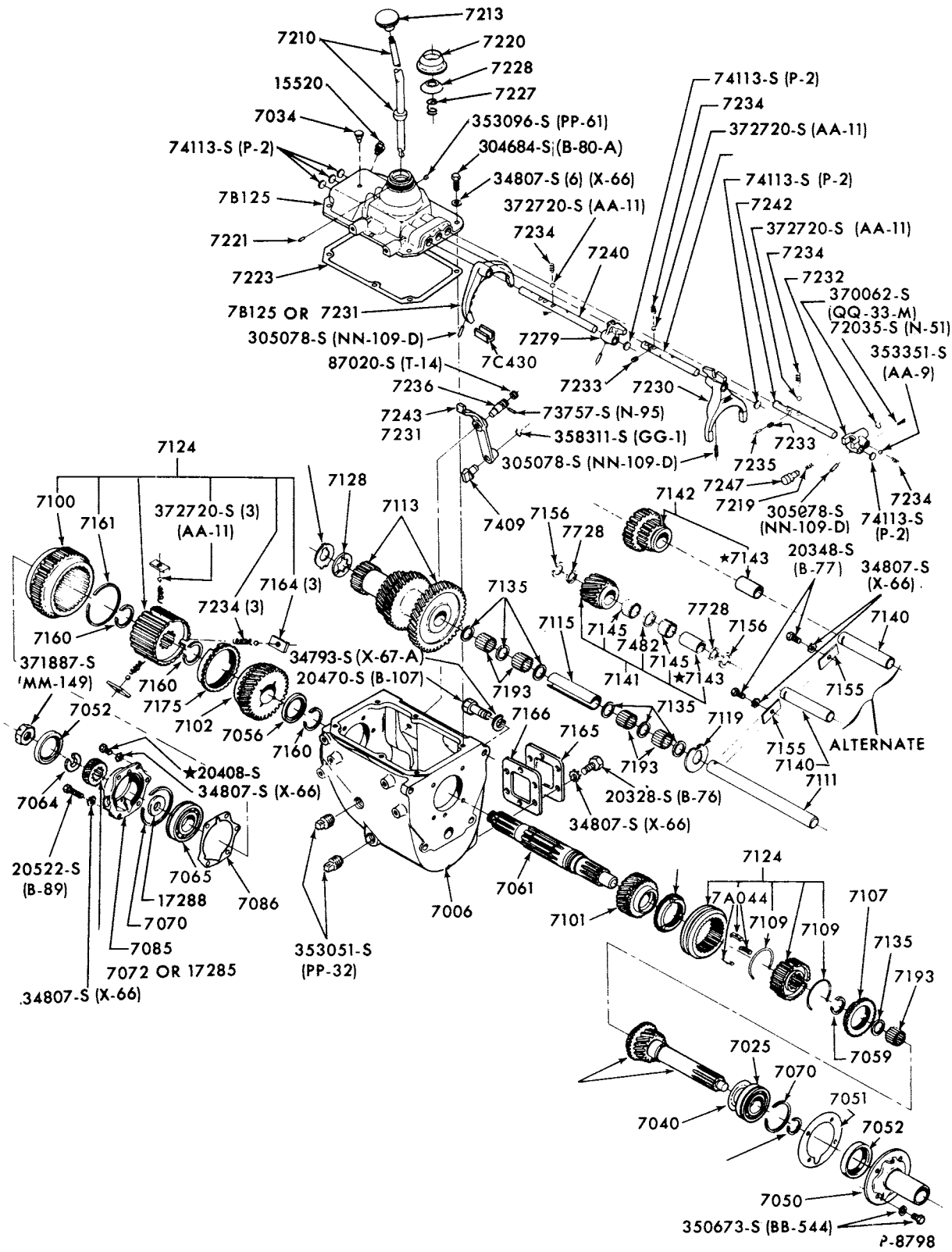

TRANSMISSION ASSY. (4 SPEED HELICAL GEAR)-WARNER GEAR T18
1973/ F100/350

COPYRIGHT © 1980 FORD MOTOR COMPANY—DEARBORN, MICHIGAN

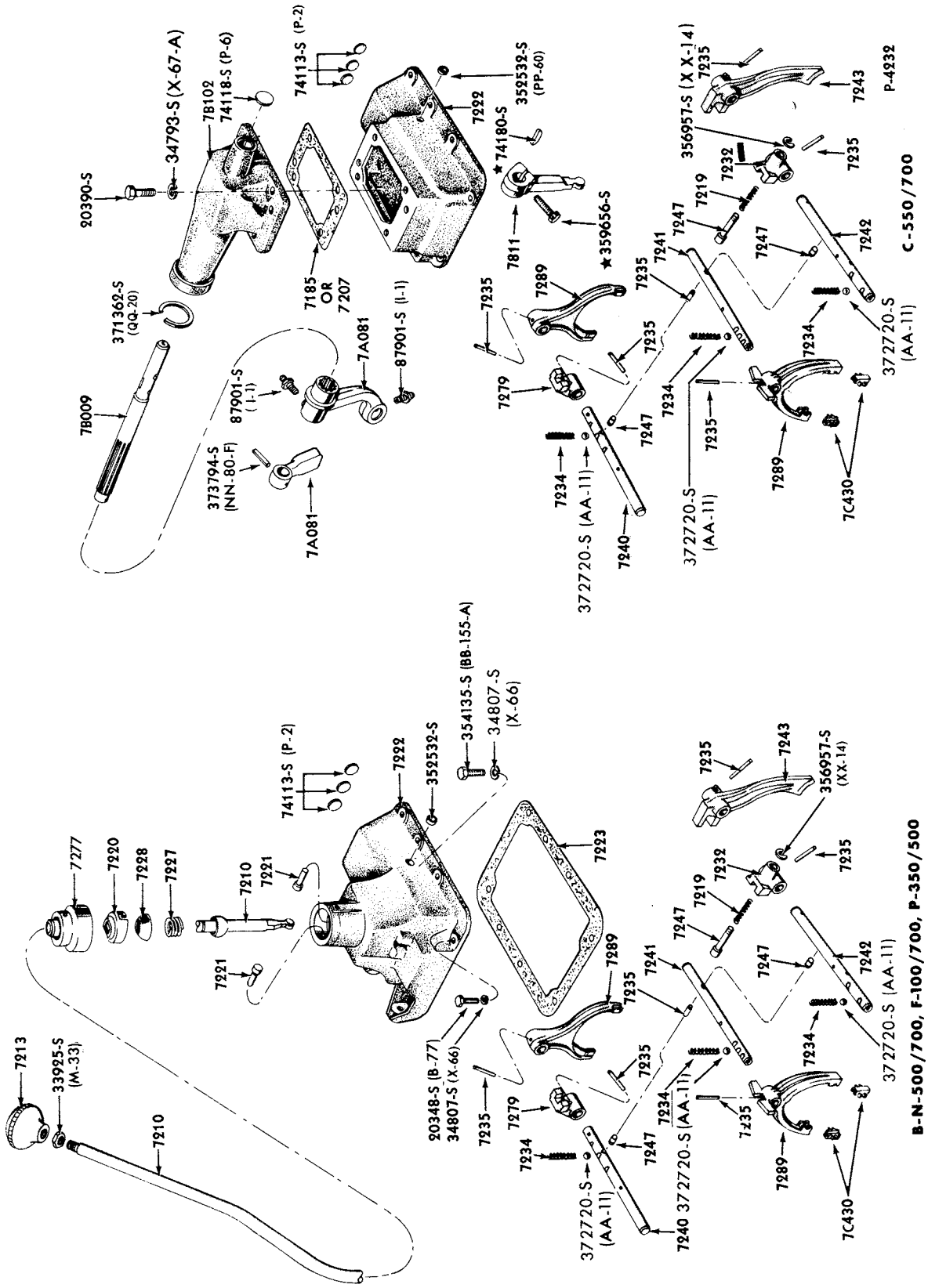

GEARSHIFT MECHANISM (4 SPEED HELICAL GEAR)-NEW PROCESS 435
1973/77 F100/350 and 1973/77 B-F-P350/500

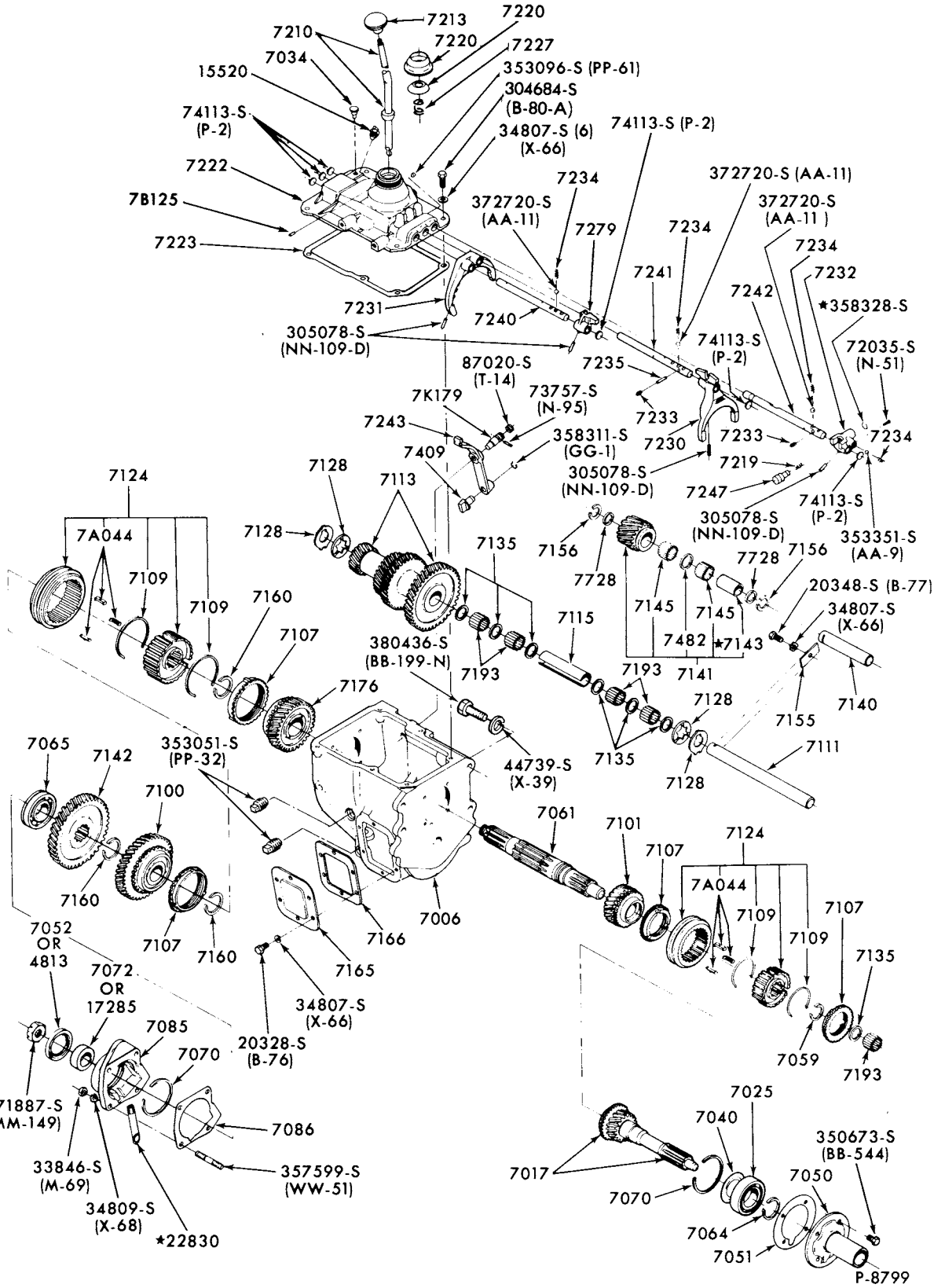

TRANSMISSION (4 SPEED)-WARNER GEAR T19-TYPICAL
1973/77 F500 1973/ F350

COPYRIGHT © 1979 FORD MOTOR COMPANY DEARBORN, MICHIGAN

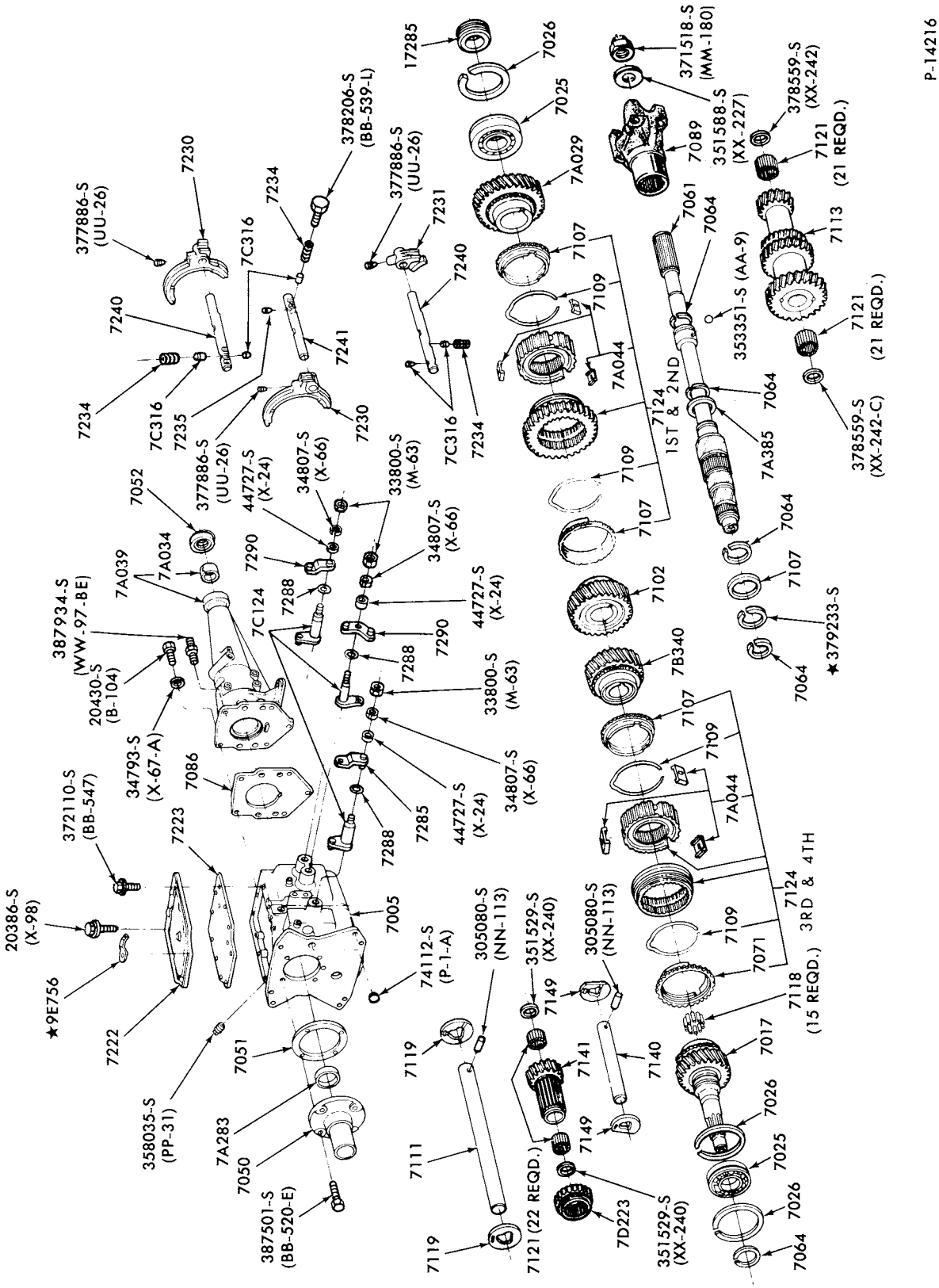

TRANSMISSION ASSY. (4 SPEED OVERDRIVE)-FORD
1978/ E100/250 and F100/250

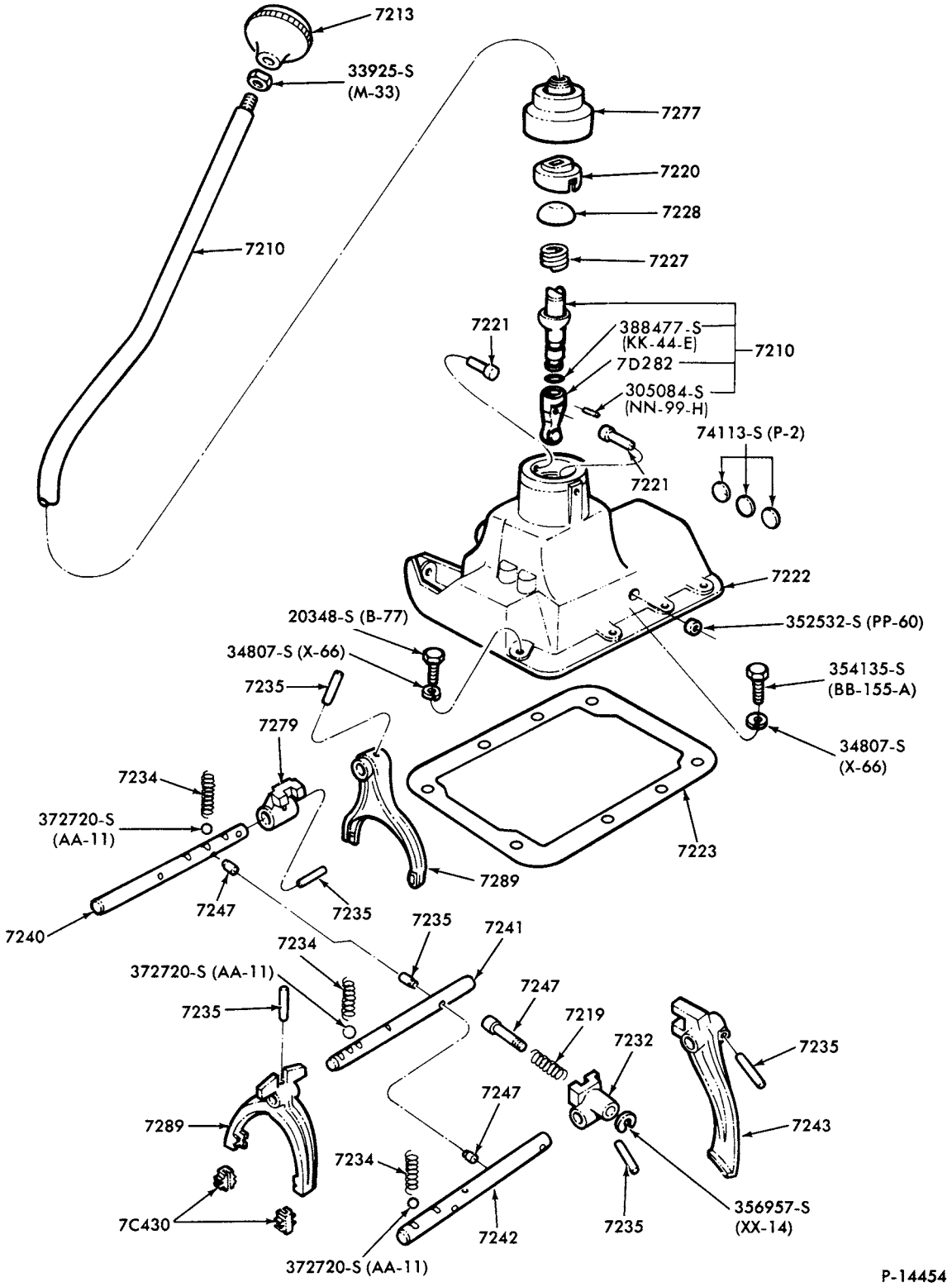

GEARSHIFT MECHANISM (4 SPEED MANUAL) - NEW PROCESS 435
1978/ F100/350

COPYRIGHT © 1979 FORD MOTOR-DEARBORN, MICHIGAN COMPANY

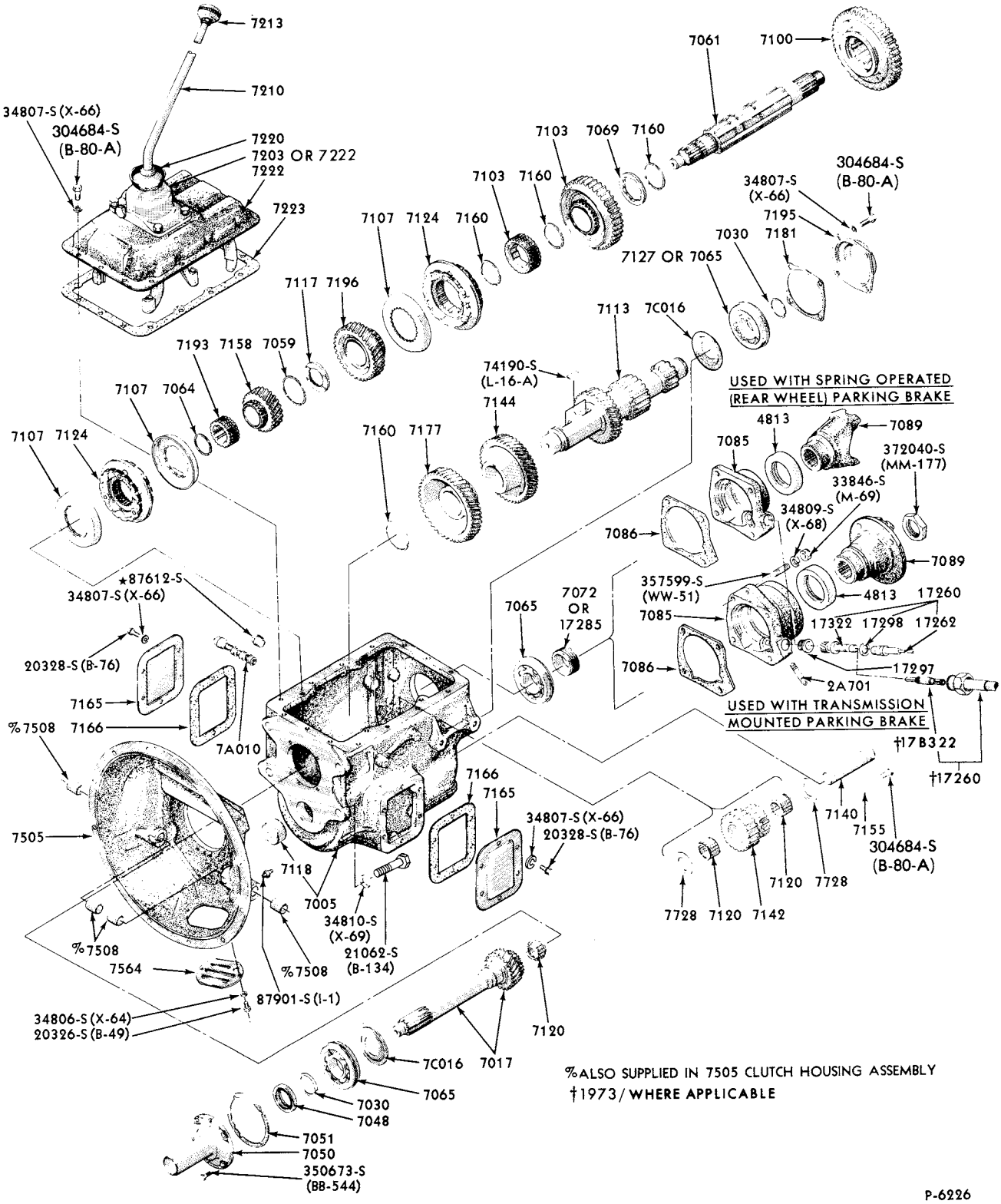

TRANSMISSION ASSY. (5 SPEED)-CLARK 280 SERIES-TYPICAL
1973/77 B-F500

COPYRIGHT © 1979 FORD MOTOR COMPANY · FORD MOTOR-DEARBORN, MICHIGAN

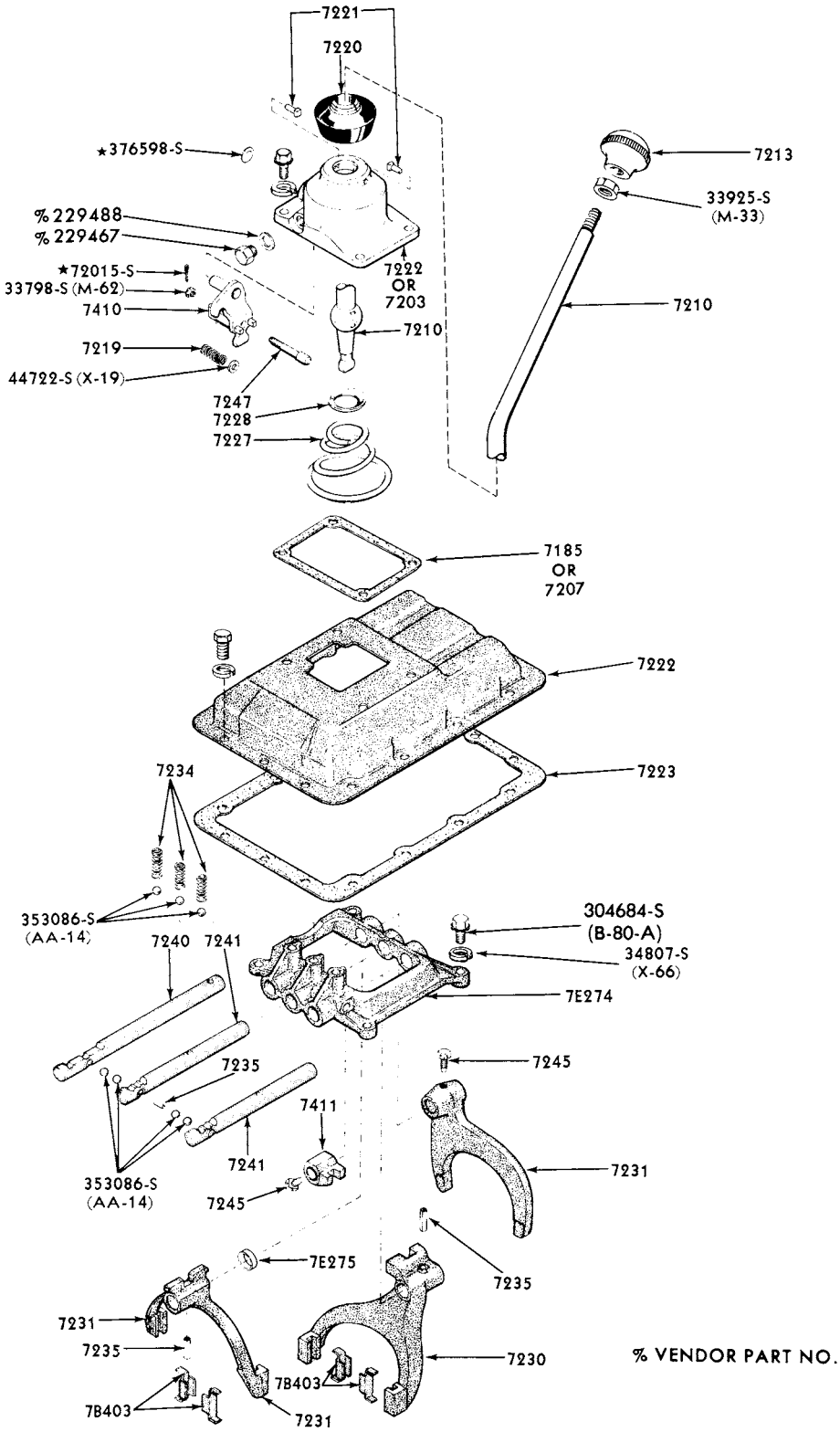

GEARSHIFT MECHANISM (5 SPEED)-CLARK 280 SERIES-TYPICAL
1973/77 B-F500 "Before Ser.S20,001"

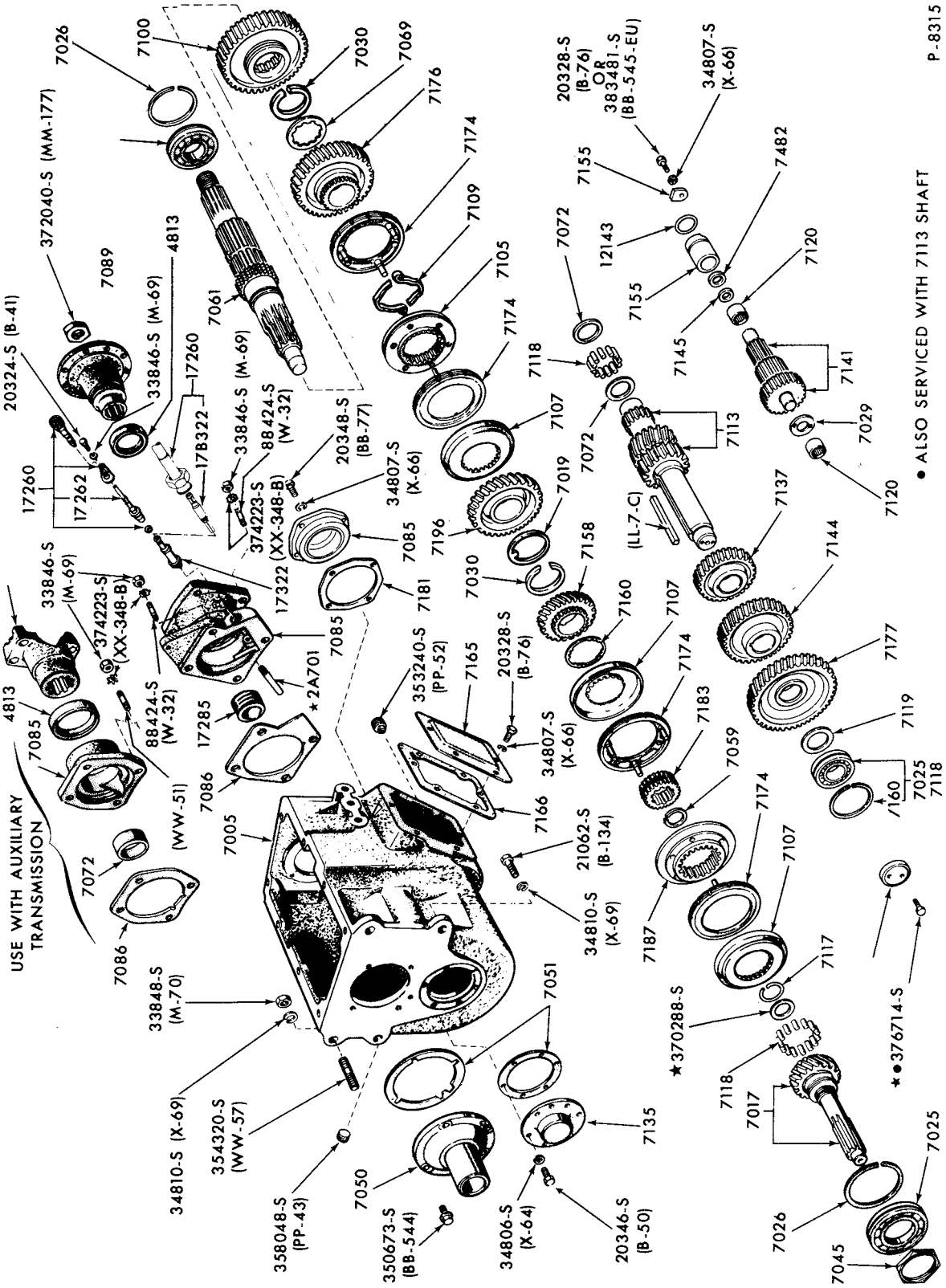

TRANSMISSION ASSY. (5 SPEED)-NEW PROCESS 542-TYPICAL
1973/77 B-F500

COPYRIGHT © 1980 FORD MOTOR COMPANY—DEARBORN, MICHIGAN

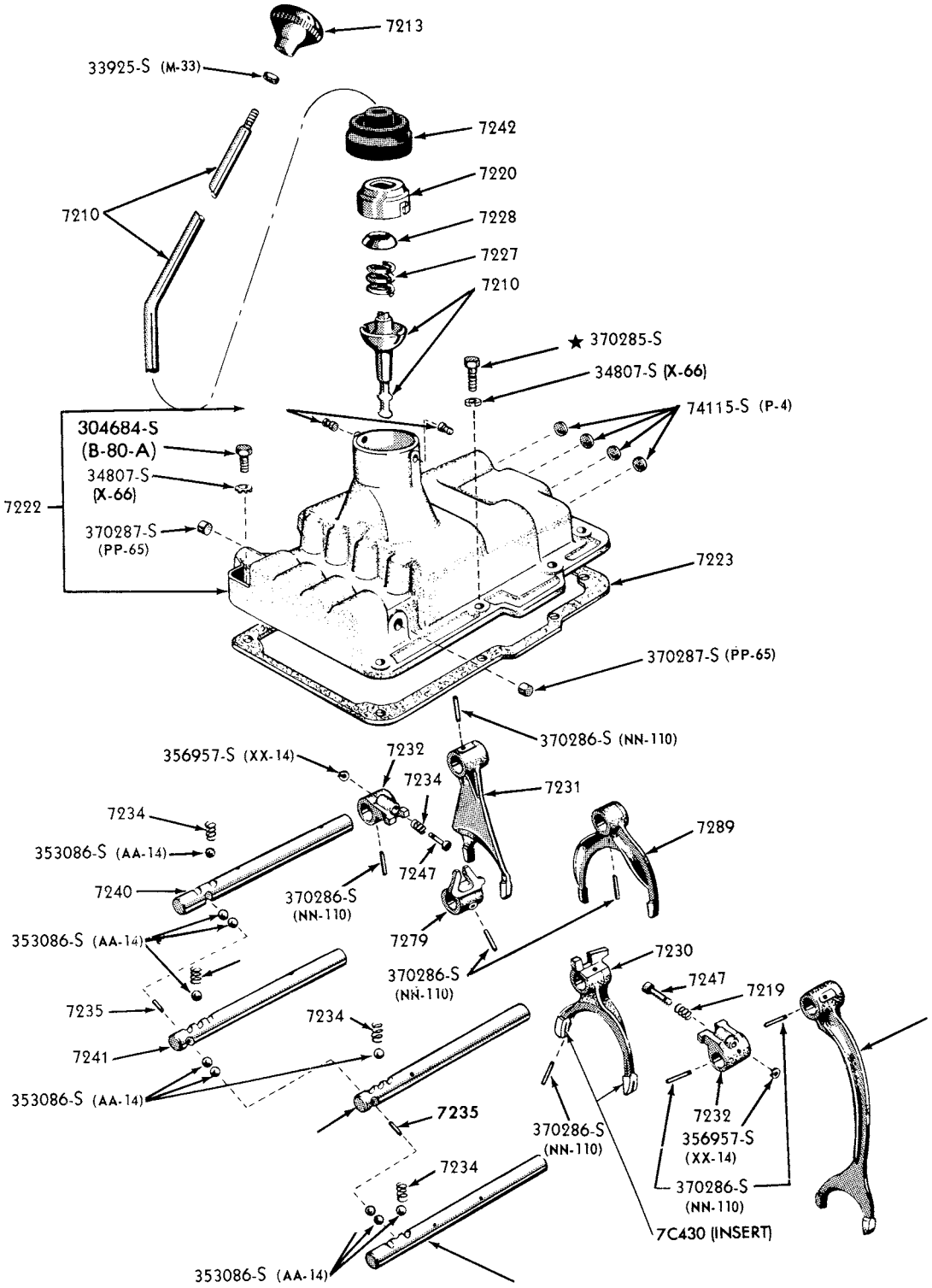

P-2397

GEARSHIFT MECHANISM (5 SPEED)-NEW PROCESS 542-TYPICAL
1973/77 B-F500

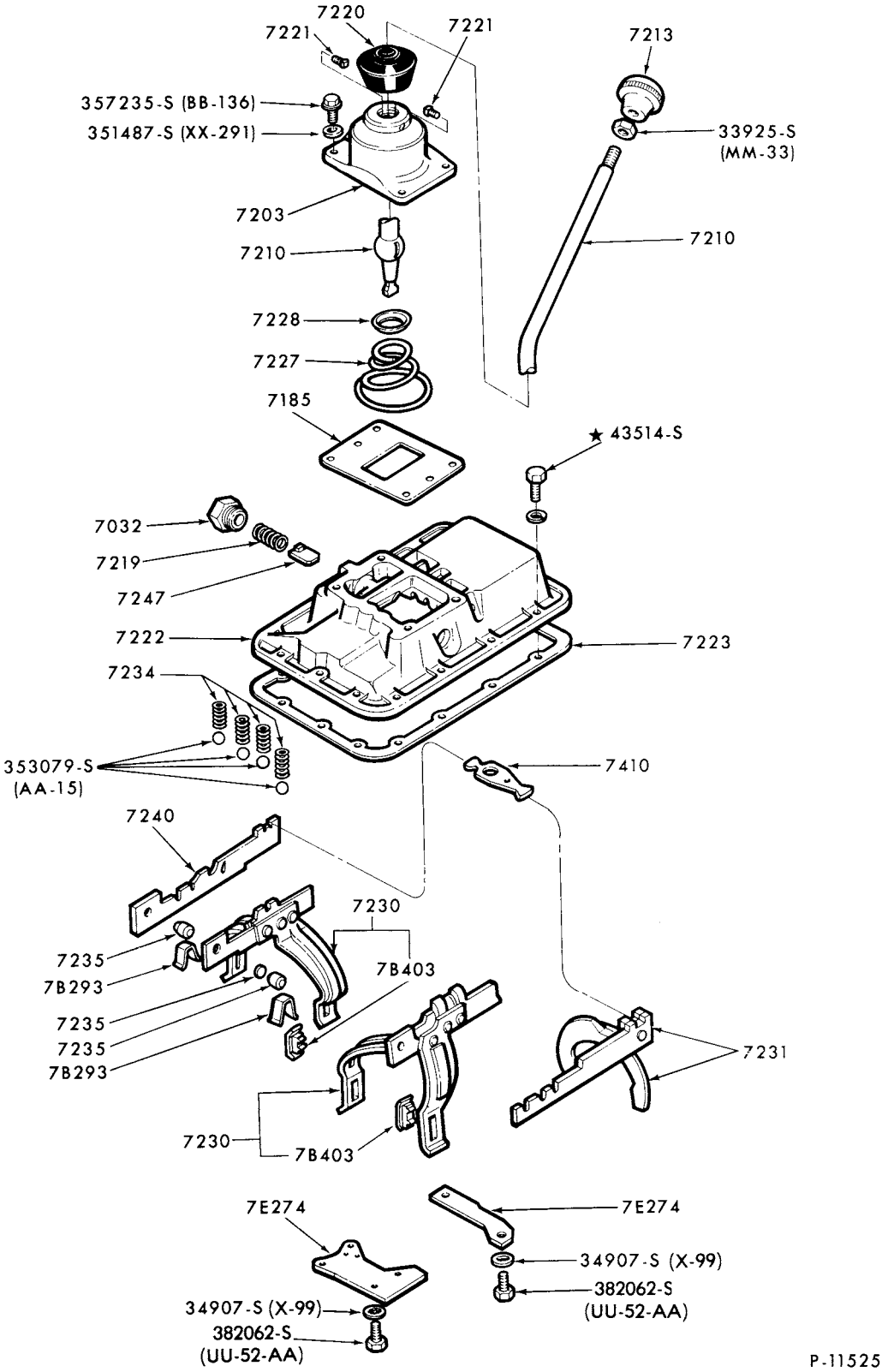

GEARSHIFT MECHANISM (5 SPEED)-CLARK 280 SERIES - TYPICAL
1973/77 B-F500 "From Ser. S20,001"

COPYRIGHT © 1979 FORD MOTOR COMPANY - DEARBORN, MICHIGAN

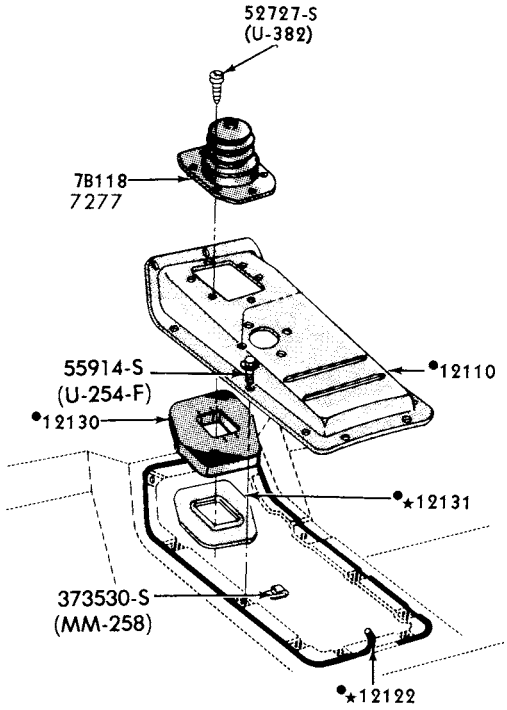

F100/250 (4x2) (4x4),
INSTALLATION FOR NEW PROCESS
435 4 SPEED TRANSMISSION

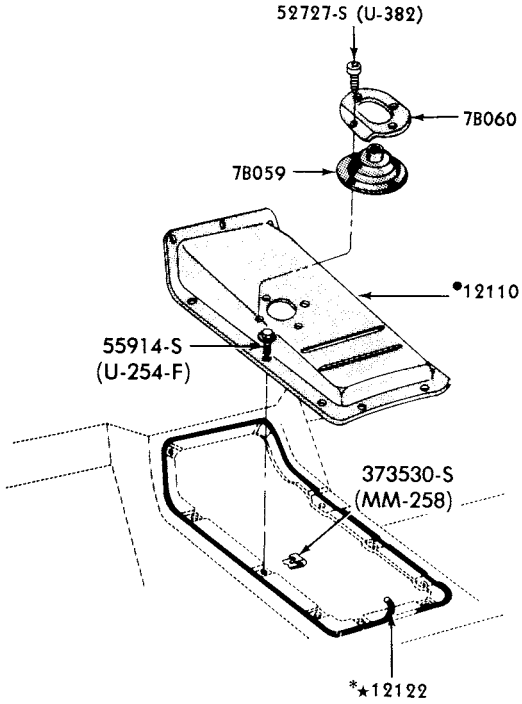

F100/250 (4x4)
INSTALLATION FOR FORD 3.03 3 SPEED
SYNCHRONIZED TRANSMISSION

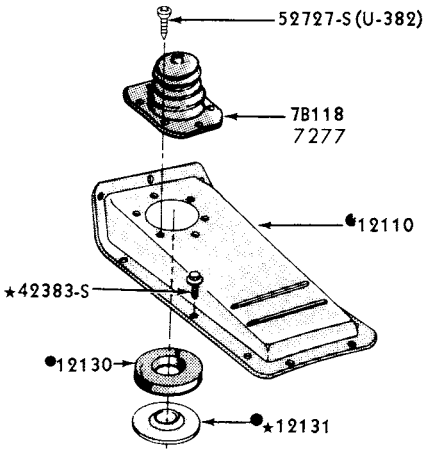

F100/350(4x2),
INSTALLATION FOR WARNER
T-18 4 SPEED TRANSMISSION

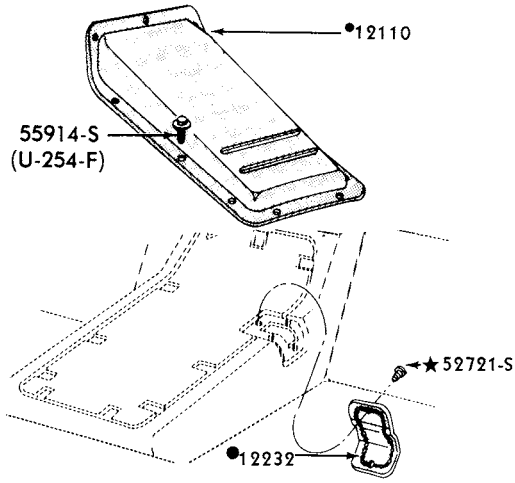

F100/350(4x2),
INSTALLATION FOR FORD-WARNER
T-85 3 SPEED OVERDRIVE AND 3 SPEED
AUTOMATIC TRANSMISSIONS

● REFER TO BODY SECTION

P-5814

TRANSMISSION and PARKING BRAKE COVERS, SEALS, BOOTS and RETAINERS
1973/ F100/350

COPYRIGHT © 1979 FORD MOTOR COMPANY, DEARBORN, MICHIGAN

1973/79 TRUCK SERIES 100/500

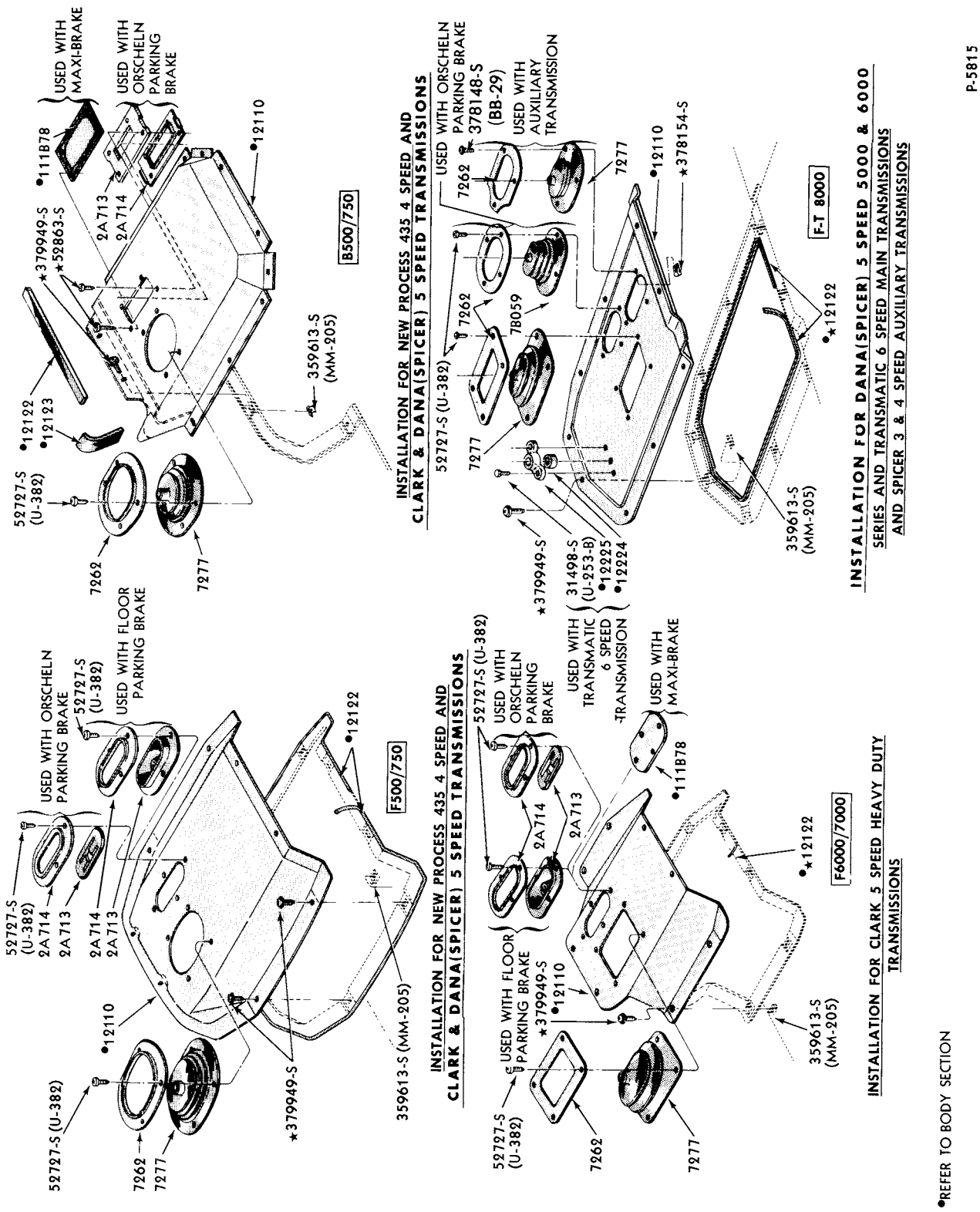

TRANSMISSION and PARKING BRAKE COVERS, SEALS, BOOTS and RETAINERS
1973/77 B-F500

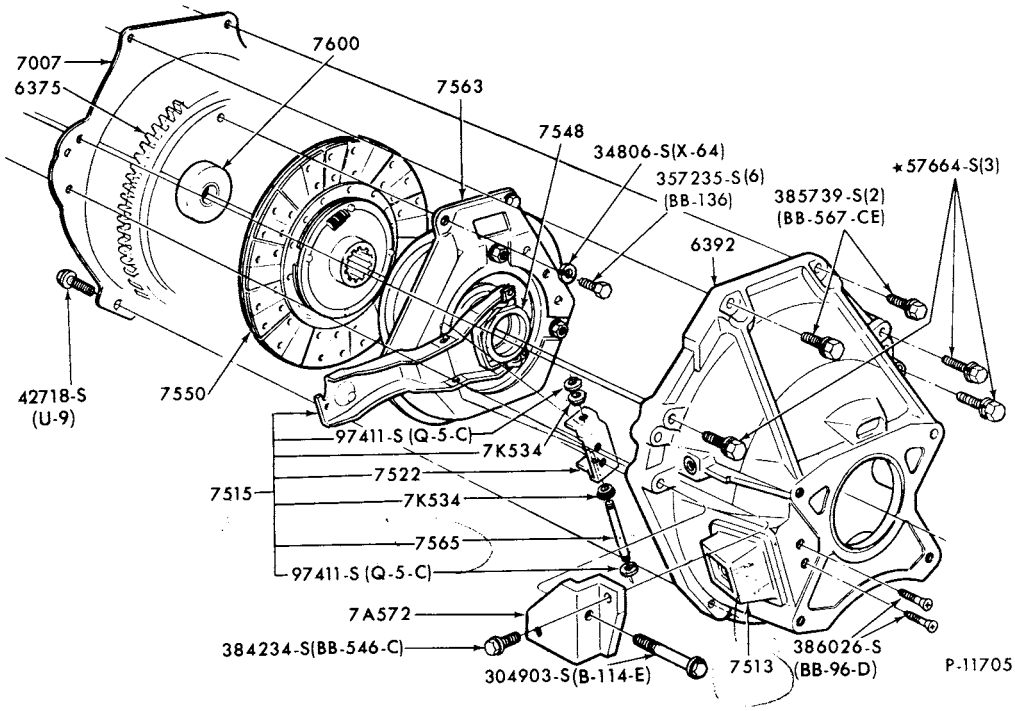

CLUTCH DISC, PRESSURE PLATE and HOUSING
1975/ E100/350

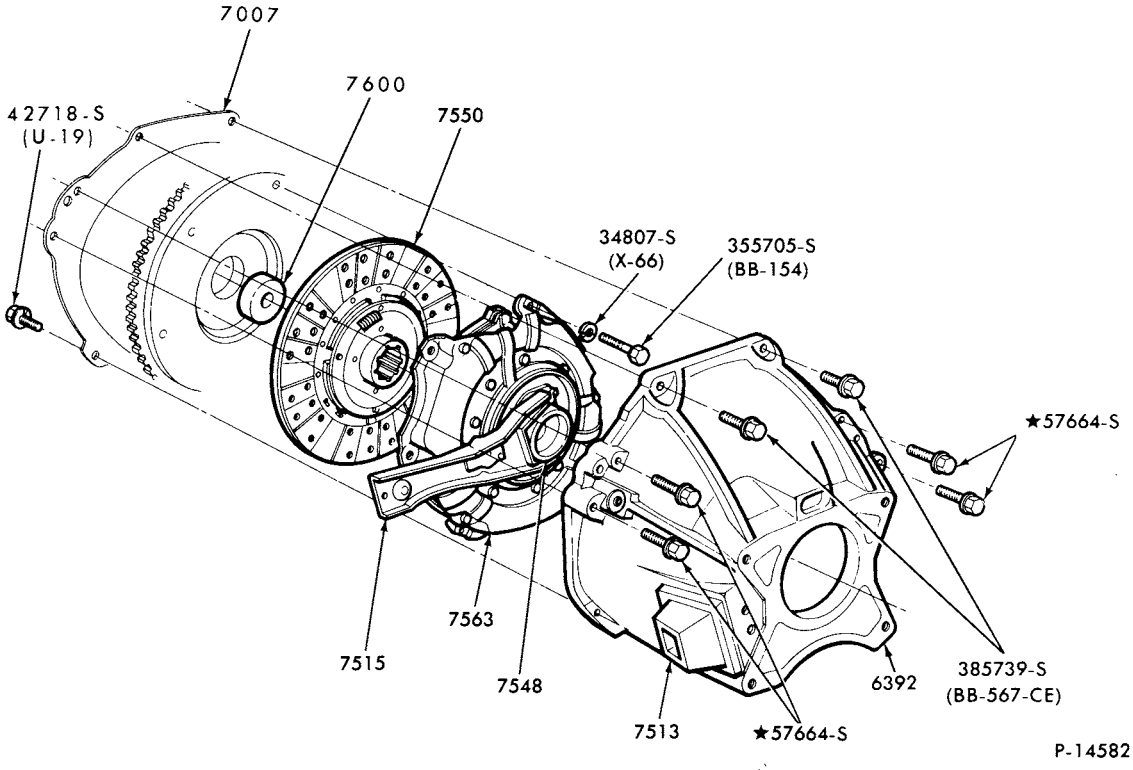

CLUTCH DISC, PRESSURE PLATE and HOUSING
1977/ F100/350--6 CYL. 300 and 8 CYL. 302 1975/77

COPYRIGHT © 1979 FORD MOTOR COMPANY, DEARBORN, MICHIGAN

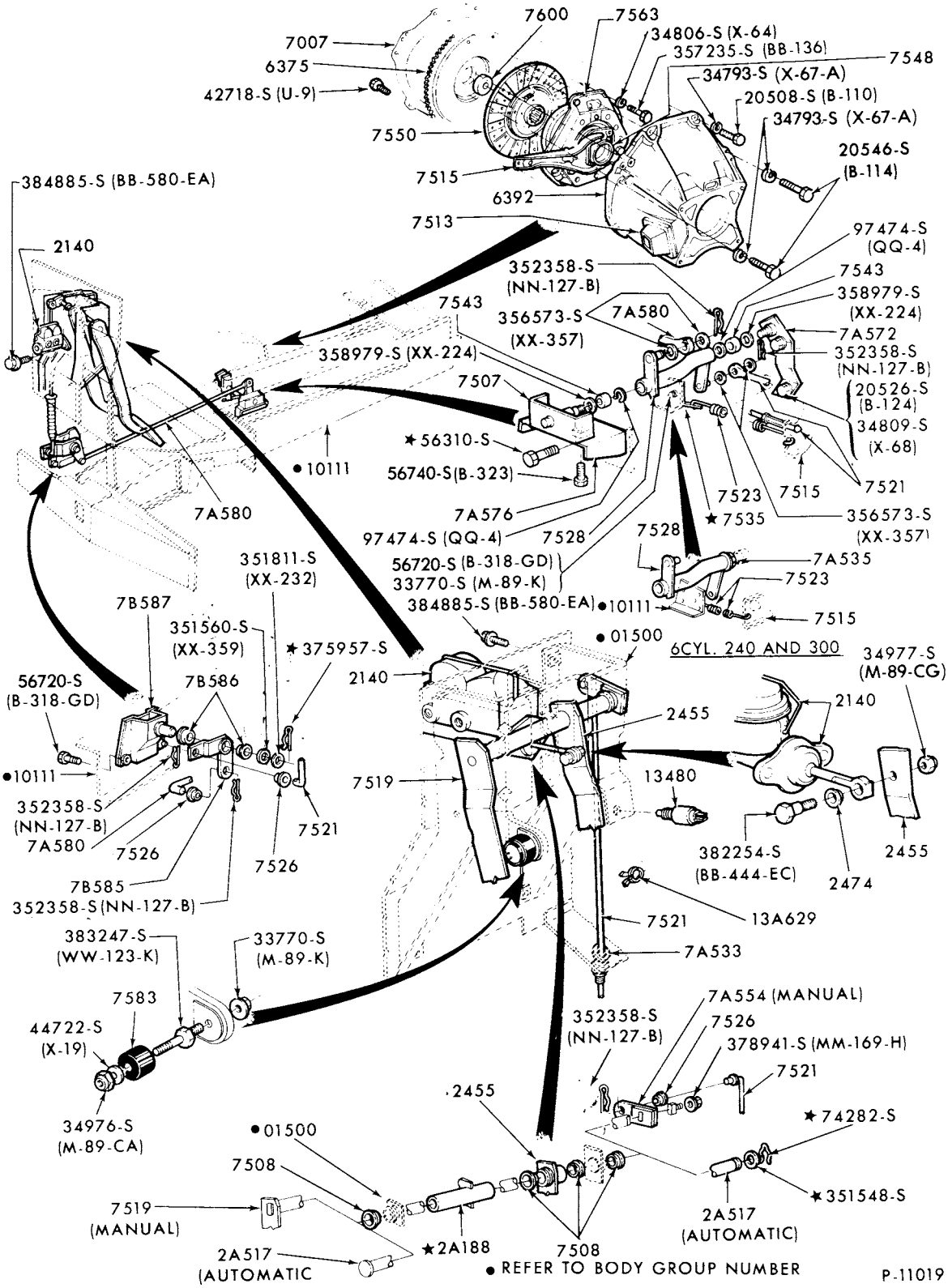

CLUTCH and BRAKE PEDAL PARTS
1973/74 E100/300--M/T and A/T

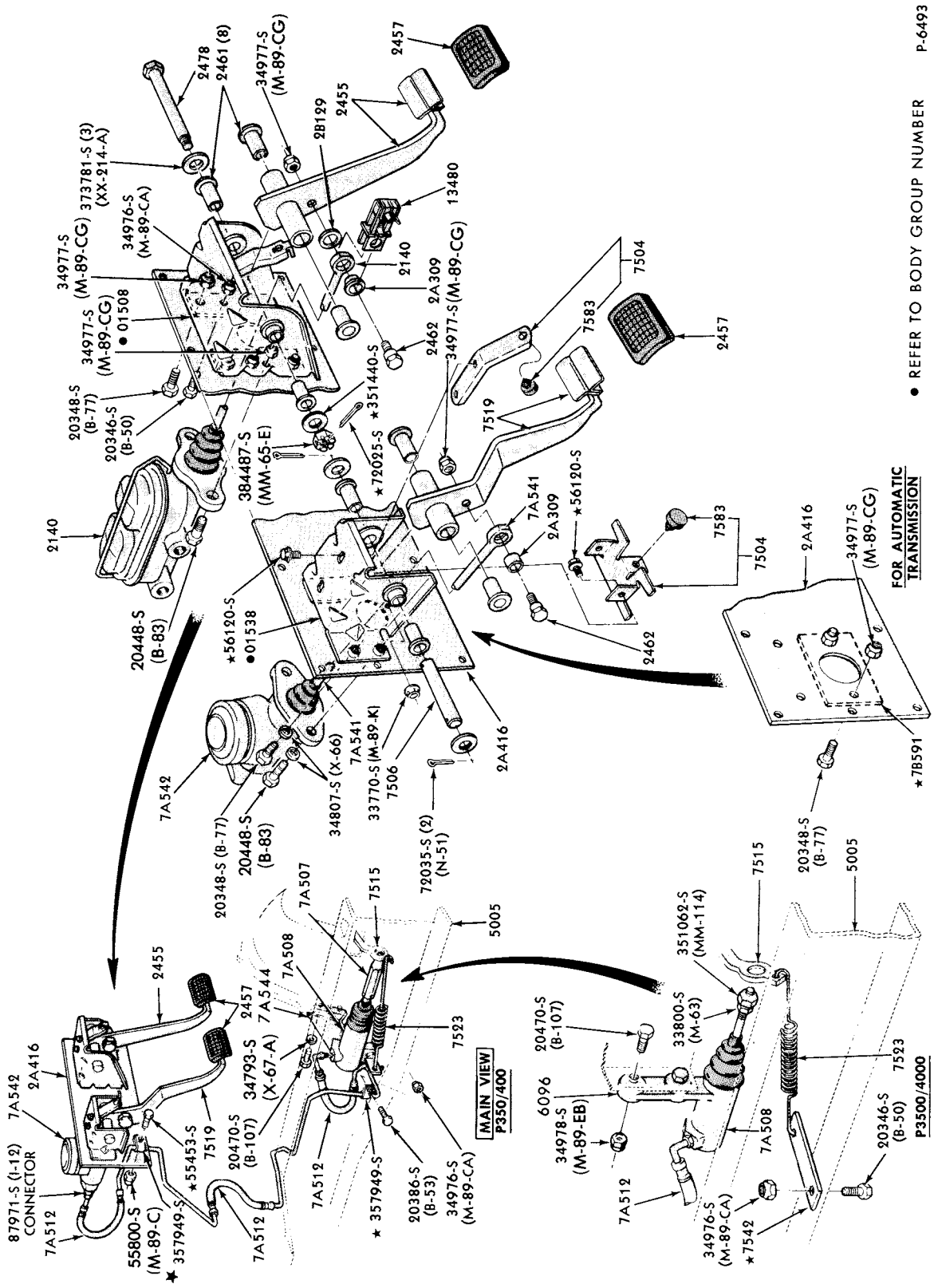

● REFER TO BODY GROUP NUMBER

P-6493

CLUTCH and BRAKE PEDAL PARTS
1973/76 P350/400--M/T and A/T
1976/77 P500--A/T

COPYRIGHT © 1979 FORD MOTOR COMPANY · DEARBORN, MICHIGAN

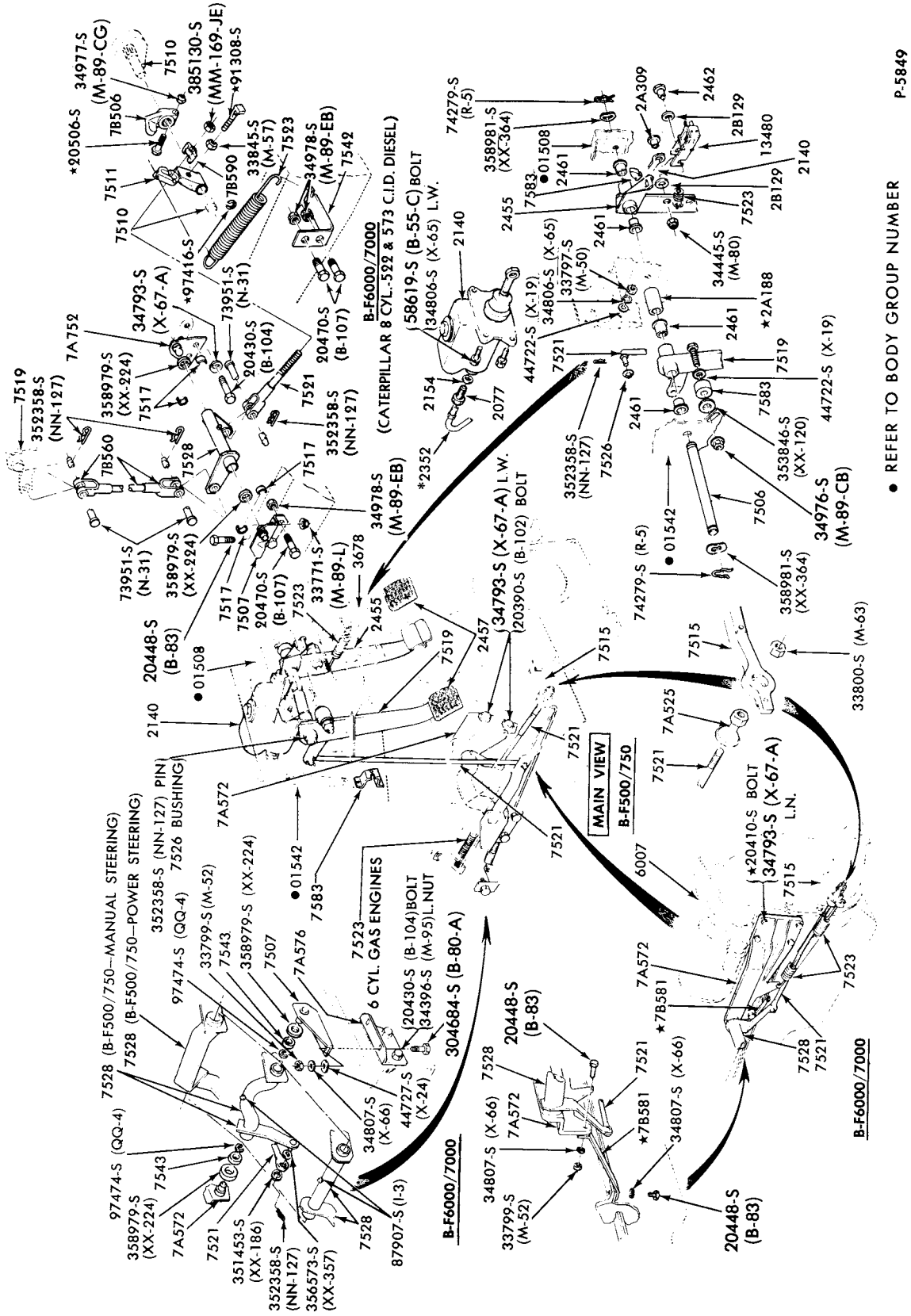

CLUTCH and BRAKE PEDALS and RELATED PARTS
1973/77 B-F500

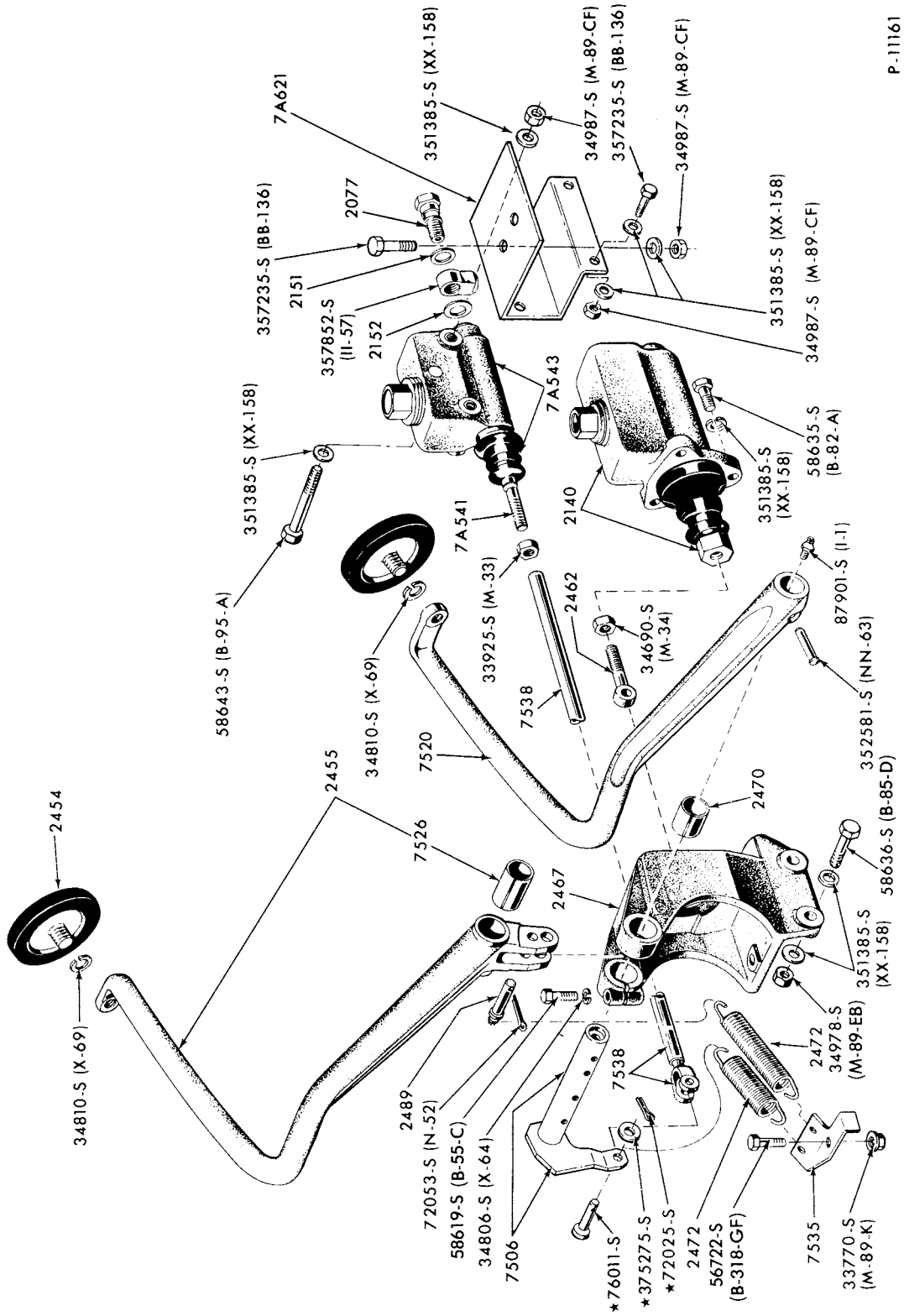

CLUTCH and BRAKE PEDALS
1973/77 P500 M/T

COPYRIGHT © 1980— FORD MOTOR COMPANY —DEARBORN, MICHIGAN

1973/79 TRUCK SERIES 100/500

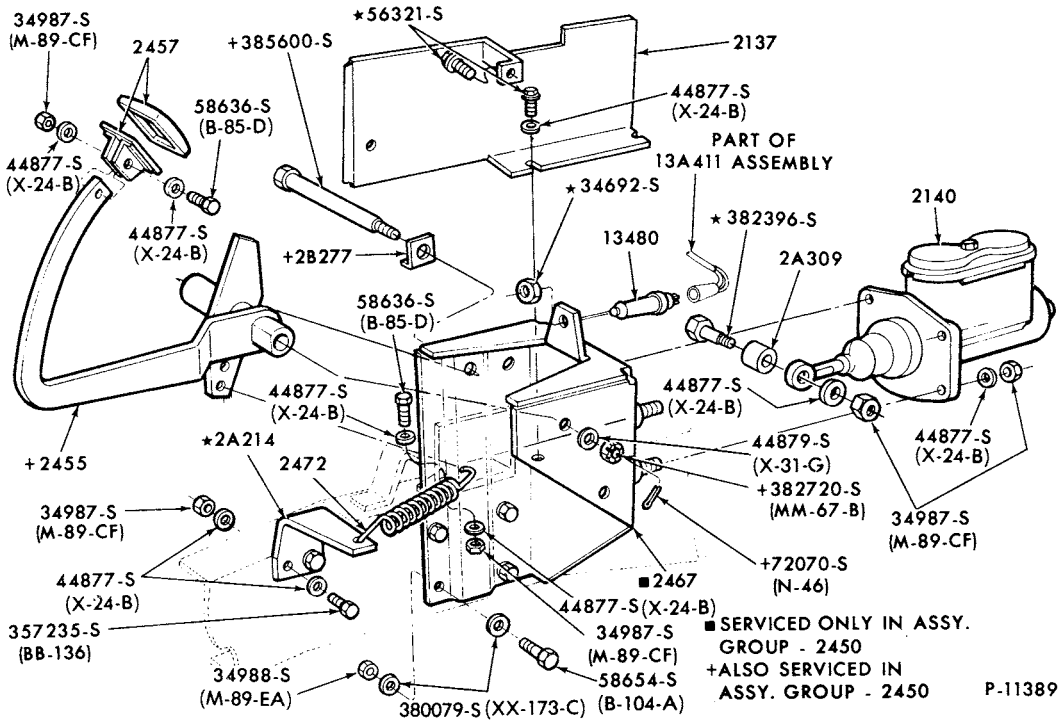

BRAKE PEDAL
1973/76 M450/500

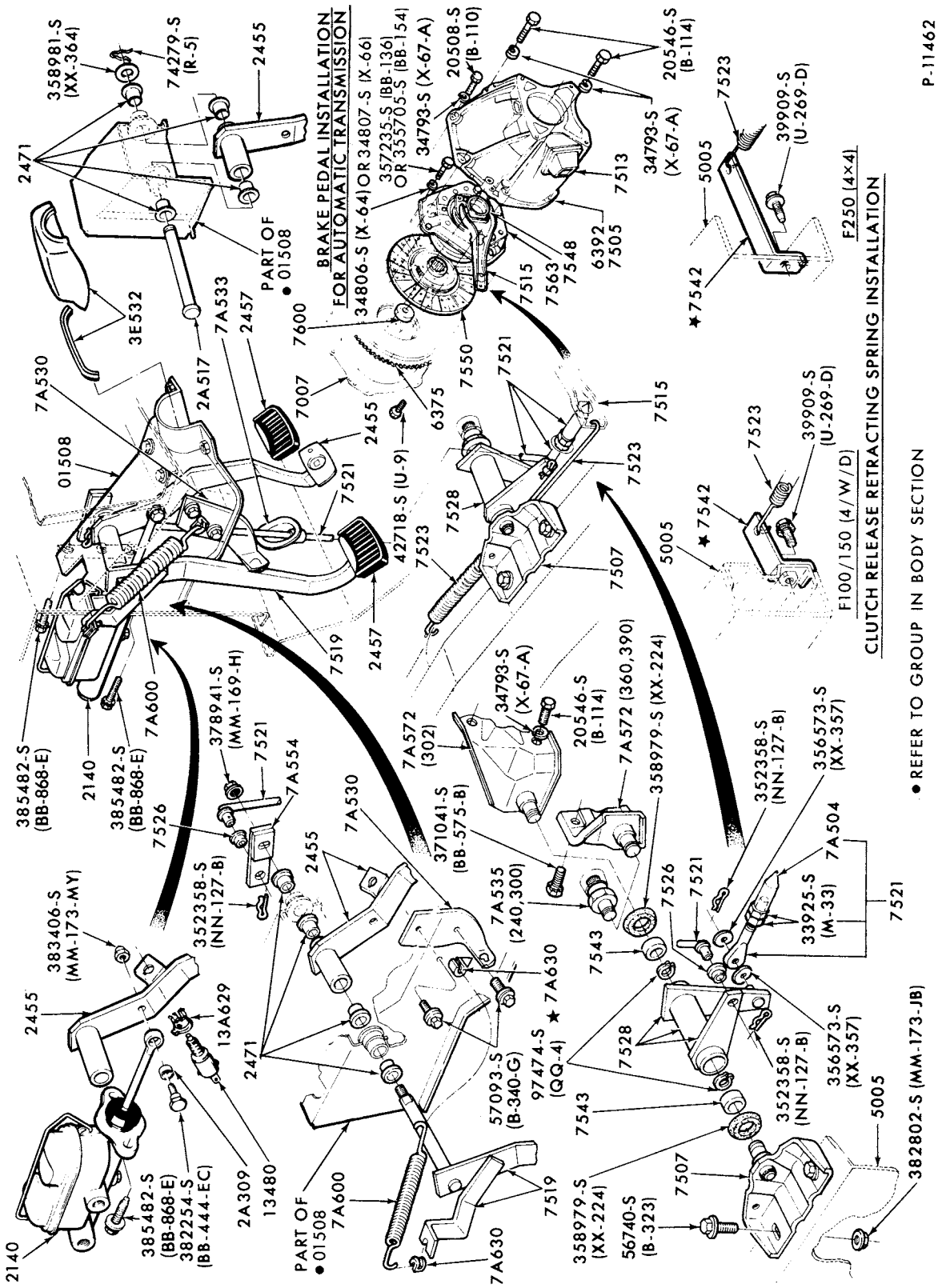

CLUTCH and BRAKE PEDALS and RELATED PARTS
1973/76 F100/350

COPYRIGHT © 1980— FORD MOTOR COMPANY —DEARBORN, MICHIGAN

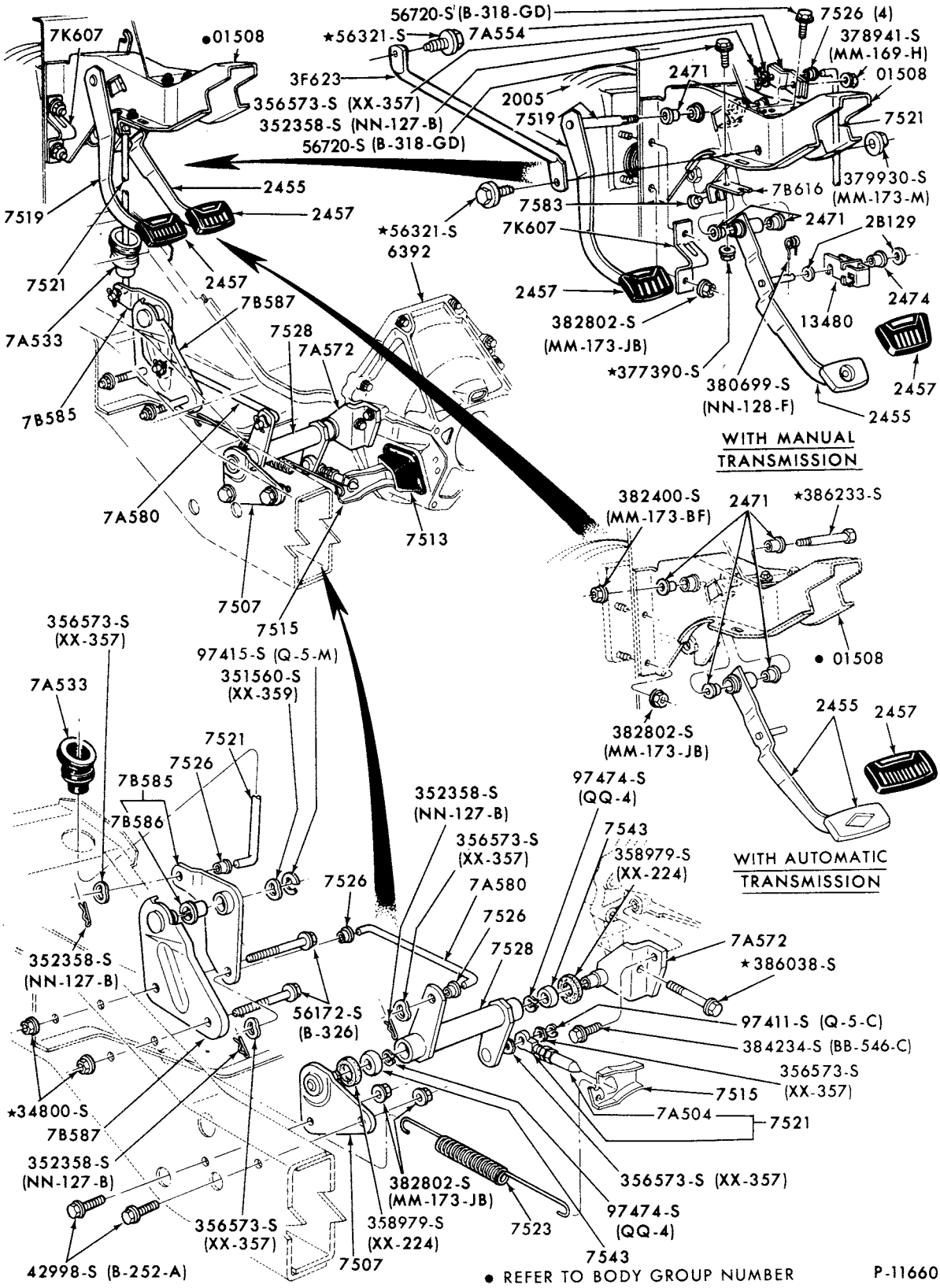

CLUTCH and BRAKE PEDAL PARTS
1975/ E100/350

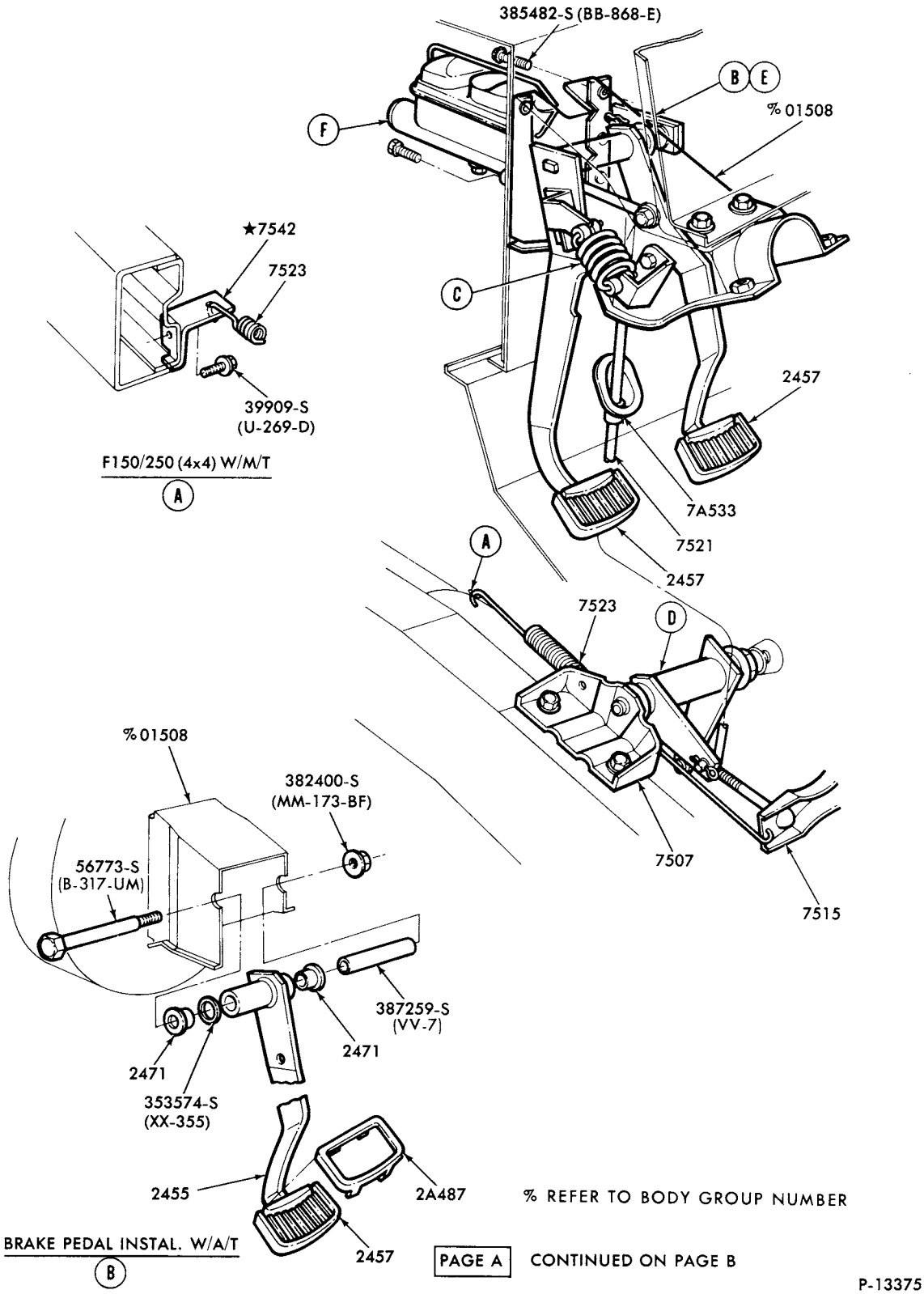

CLUTCH and BRAKE PEDALS - PAGE A (cont'd. on PAGE B)
1977/ F100/350

COPYRIGHT © 1979 FORD MOTOR COMPANY, DEARBORN, MICHIGAN

1973/79 TRUCK SERIES 100/500

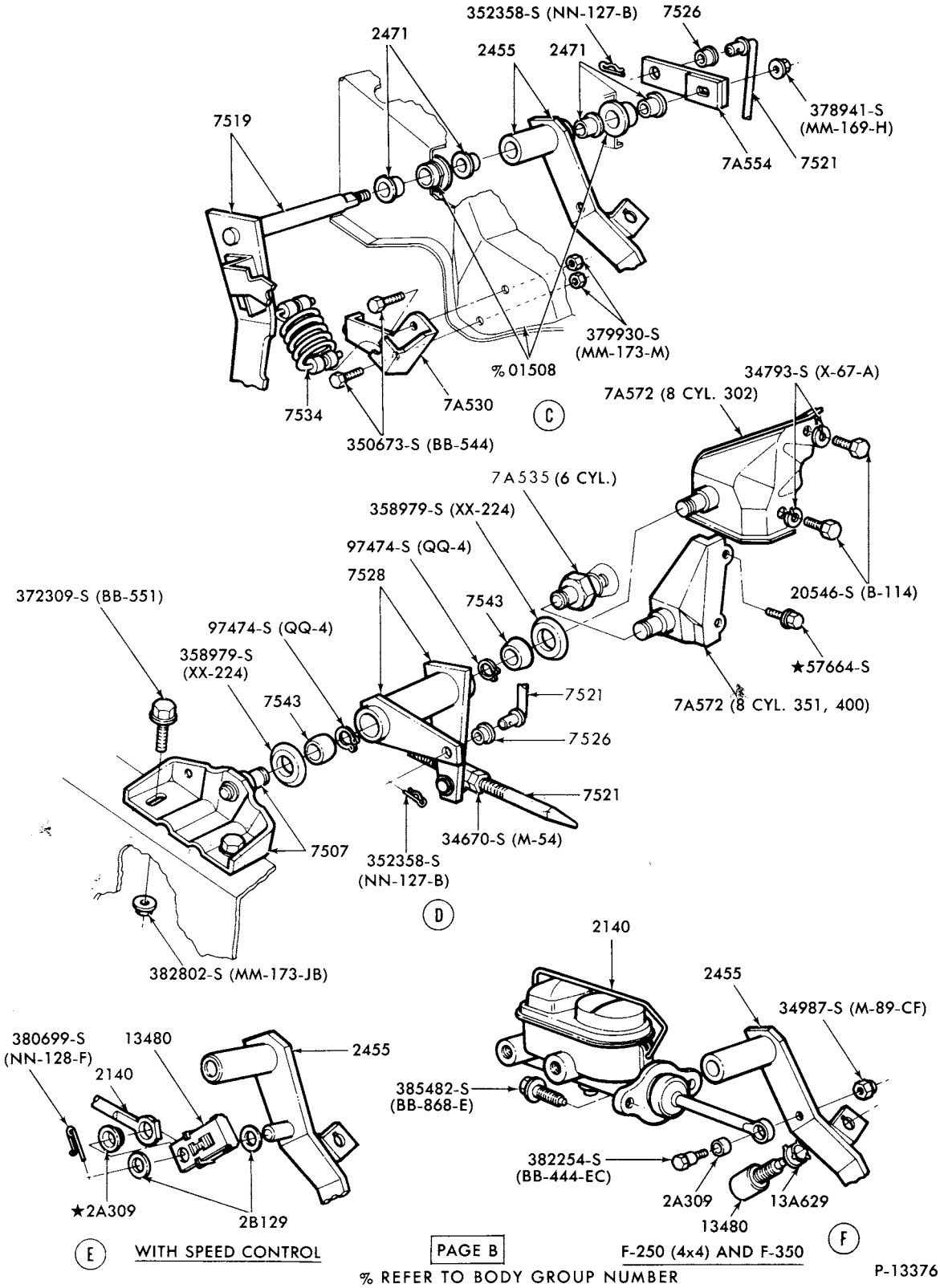

CLUTCH and BRAKE PEDALS - PAGE B (See PAGE A)

1977/ F100/350

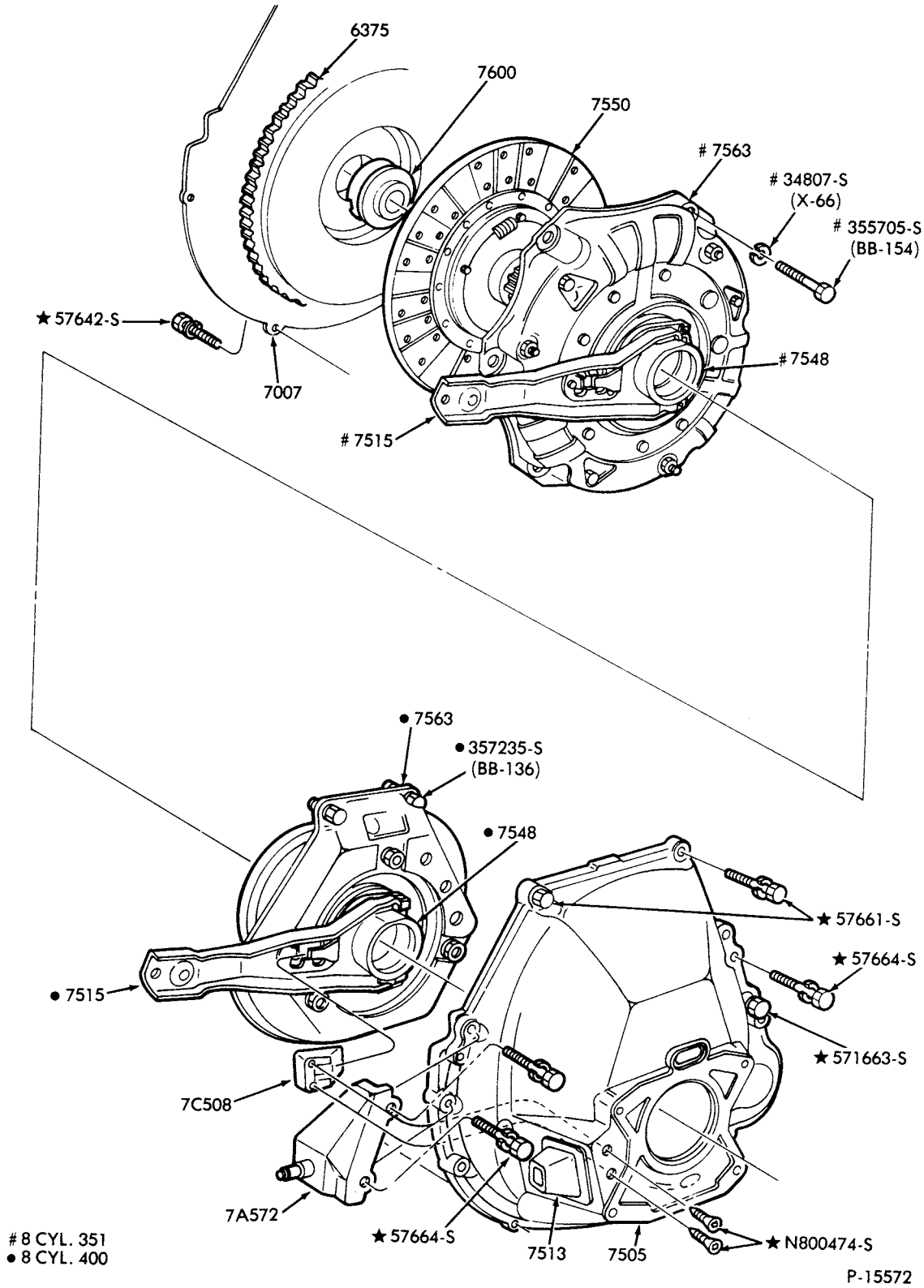

CLUTCH DISC, PRESSURE PLATE and HOUSING
1977/ F100/350--8 CYL. 351 and 400

COPYRIGHT © 1980 FORD MOTOR COMPANY, DEARBORN, MICHIGAN

INDEX

THIS INDEX SECTION INCLUDES THE FOLLOWING MAJOR GROUPS

CONVERTERS and CASE
GEARS and SHAFTS
MAIN CONTROL and OIL COOLER
PARKING PAWL LINKAGE
FRONT SERVO and BAND
GEAR SHIFT MECHANISM
OIL PRESSURE REGULATOR
REAR SERVO and BAND

YEAR 19__	TITLE	MODEL	SECTION	PAGE	ILLUS. NO.
	C/M - FMX TYPE				
	EXTERNAL PARTS				
73/77	Gearshift controls	F350	A71	2	P-10010
73/77	Gearshift controls-typical	P350/500	A71	3	P-9972
73/77	Gearshift controls and wiring installation	P350/500	A71	1	P-9978
73/77	Neutral switch and wiring	F350	A71	2	P-10268
73	Oil cooling system-typical	F350	A71	4	P-6691
74/77	Oil cooling system-typical	F350	A71	6	P-10947
73/77	Oil cooling system-typical	P350/500	A71	5	P-6692
73/77	Vacuum tube installation	F350, P350/500	A71	6	P-10013
	INTERNAL PARTS				
73/77	Converter parts-typical	F350, P350/500	A70	4	P-6462
73/77	Extension housing and parking brake drum-typical	F350, P350/500	A70	3	P-2939
73/77	Clutches, gears, shafts, extension and related parts-typical	F100, F350, P350/500	A70	2	P-6463
73/77	Main control	F100, F350, P350/500	A70	1	P-6466
73/77	Oil pressure regulator-typical	F350, P350/500	A70	5	P-6470
73/77	Parking pawl, throttle and manual control linkage	F350, P350/500	A70	5	P-6471
73/77	Servo and band-front-typical	F350, P350/500	A70	6	P-6464
73/77	Servo and band-rear-typical	F350, P350/500	A70	6	P-6465
73/77	Oil pressure tubes installation-typical	F100, F350, P350/500	A70	1	P-6472
	C4 TYPE				
	EXTERNAL PARTS				
73/	Gearshift controls	F100/250	A71	7	P-10010
73/74	Gearshift controls	E100/300	A71	8	P-10007
75/	Gearshift controls	E100/350	A71	26	P-11722
73/	Neutral switch and wiring	F100/250	A71	7	P-10268
73/	Oil cooling system	E100/350 and F100/250	A71	9	P-6691
78/	Oil cooling system	F150--8 cyl. 302	A71	13	P-14277
74/	Oil cooling system	F100--8 cyl. 302	A71	10	P-10947
73	Vacuum tube installation	E100/300--6 cyl. 240	A71	10	P-6383
73/77	Vacuum tube installation	E100/350--8 cyl.	A71	11	P-10255
73/	Vacuum tube installation	E100/350, F100/250-2/W/D-6 cyl. 240, 300	A71	12	P-10571
	INTERNAL PARTS				
73/	Case and extension housing parts-typical	E100/350, F100/250	A70.1	1	P-4426
73/	Gear and shafts-typical	E100/350, F100/250	A70.1	2	P-4327
73/	Main control	E100/350, F100/250	A70.1	3	P-4507
73/	Parking pawl linkage throttle and manual control linkage-typical	E100/350, F100/250	A70.1	3	P-4330
73/	Servo and band-front	E100/350, F100/250	A70.1	4	P-4328
73/	Servo and band-rear	E100/350, F100/250	A70.1	4	P-4329

COPYRIGHT © 1979 - FORD MOTOR COMPANY - DEARBORN, MICHIGAN

INDEX

YEAR 19__	TITLE	MODEL	SECTION	PAGE	ILLUS. NO.
	C6 TYPE				
	EXTERNAL PARTS				
73/76	Transmission installation	F100/350--8 cyl.351, 360,390,400,460	A71	21	P-12209
73/	Gearshift controls	F100/350--2/W/D	A71	14	P-10010
73/77	Gearshift controls	F100/150--4/W/D	A71	15	P-10390
78/	Gearshift controls	F150/350--4/W/D	A71	27	P-14248
73/76	Gearshift mechanism(dash and shelf mounted)	M450/500	A71	22	P-11607
73/76	Gearshift mechanism(dash mounted)	M450/500	A71	22	P-11608
73/76	Gearshift mechanism(shelf mounted)	M450/500	A71	19	P-11609
73/	Neutral switch and wiring	F100/350,M450/500	A71	14	P-10268
73	Oil cooling system	F100/350	A71	16	P-6691
74/	Oil cooling system	F100/350	A71	15	P-10947
73/76	Oil cooling system	M450/500	A71	20	P-11407
74/76	Oil cooling system	M450/500	A71	19	P-11555
77/	Oil cooling system	E100/350	A71	21	P-14272
78/	Oil cooling system	F100/350	A71	13	P-14277
73	Steering column	F100/350--2/W/D	35	3	P-10638
74/77	Steering column	F100/350--2/W/D	35	15	P-11049
78/	Steering column--fixed wheel	F100/350--2/W/D	35	35	P-14246
78/	Steering column--tilt wheel	F100/350--2/W/D	35	31	P-14242
73/75	Steering column	F100/350--4/W/D	35	14	P-10723
76/77	Steering column	F100/350--4/W/D	35	25	P-12975
78/	Steering column--fixed wheel	F150/350--4/W/D	35	33	P-14244
78/	Steering column--tilt wheel	F150/350--4/W/D	35	30	P-14241
75/77	Steering column	E100/350	35	19	P-11630
78/	Steering column--fixed wheel	E100/350	35	26	P-14237
78/	Steering column--tilt wheel	E100/350	35	27	P-14238
73/	Transfer case-New Process	F100/150--4/W/D	70	5	P-10389
73/	Transfer case gearshift mechanism and supports	F100/150--4/W/D	70	6	P-10391
75/	Transmission installation	E100/350	A71	26	P-11670
73/	Vacuum tube installation	F100/250--8 cyl. 460	A71	18	P-10573
73/78	Vacuum tube installation	F100/350--2/W/D, F250--4/W/D-8 cyl. 360,390	A71	17	P-10572
73/76	Vacuum tube installation	M450/500--8 cyl. 360,390	A71	23	P-11595
73/76	Vacuum tube installation	M450/500--8 cyl.460	A71	23	P-11596
75/	Vacuum tube installation	E100/350--6 cyl.300	A71	25	P-11613
	INTERNAL PARTS				
73/	Case and extension parts-typical	F100/350,M450/500	A70.2	2	P-5172
73/	Extension housing and related parts	F100/350,M450/500	A70.2	3	P-6986
73/	Gear and shafts-typical	F100/350,M450/500	A70.2	1	P-5173
73/	Main control	F100/350,M450/500	A70.2	4	P-5176
73/	Parking pawl, throttle and manual control linkage	F100/350,M450/500	A70.2	3	P-5191
73/	Servo and bank-intermediate-typical	F100/350,M450/500	A70.2	4	P-5174

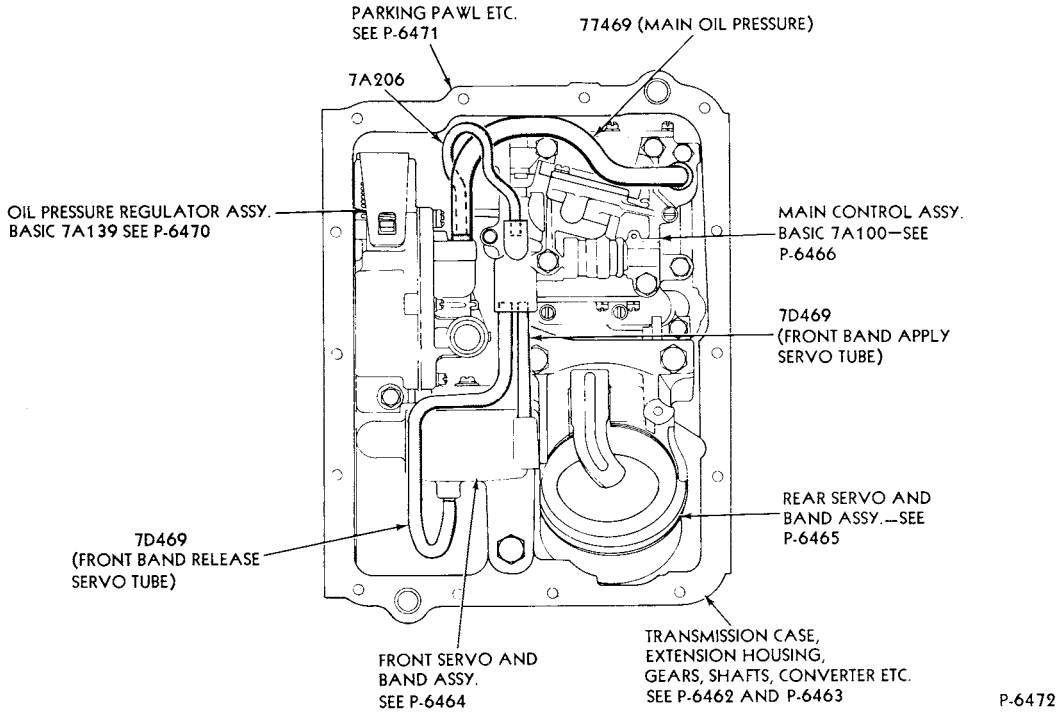

OIL PRESSURE TUBES INSTALLATION-TYPICAL
1973/ F350 and 1973/77 P350/500-6 CYL. 300
1974 F100--8 CYL. 302

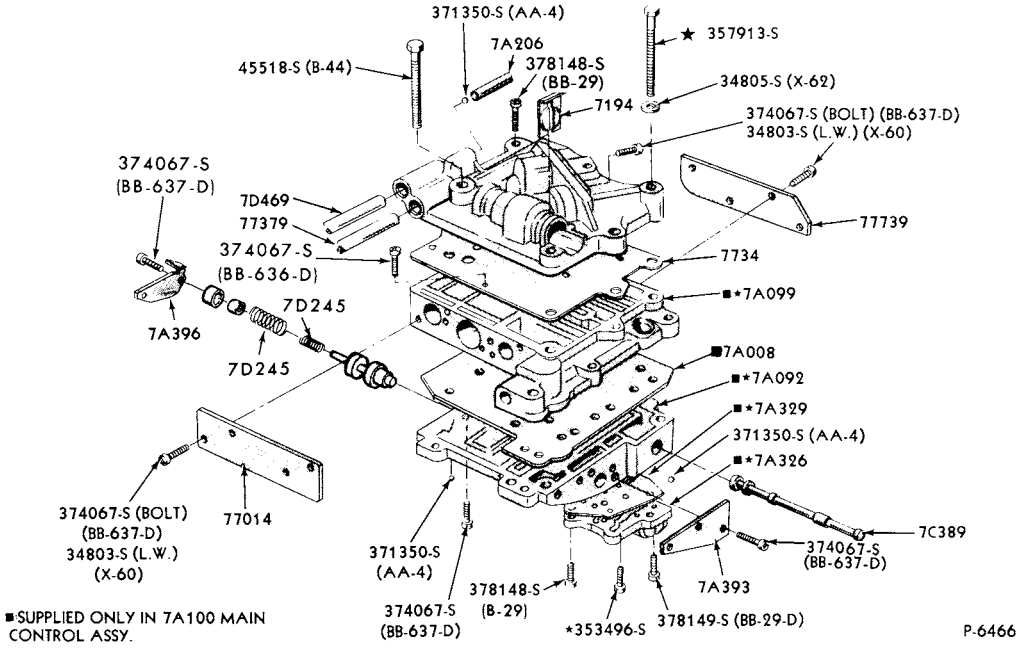

MAIN CONTROL VALVE BODY ASSY. (BASIC 7A100)-TYPICAL
1973/ F350 and 1973/77 P350/500--6 CYL. 300
1974 F100--8 CYL. 302

COPYRIGHT © 1979 – FORD MOTOR COMPANY – DEARBORN, MICHIGAN

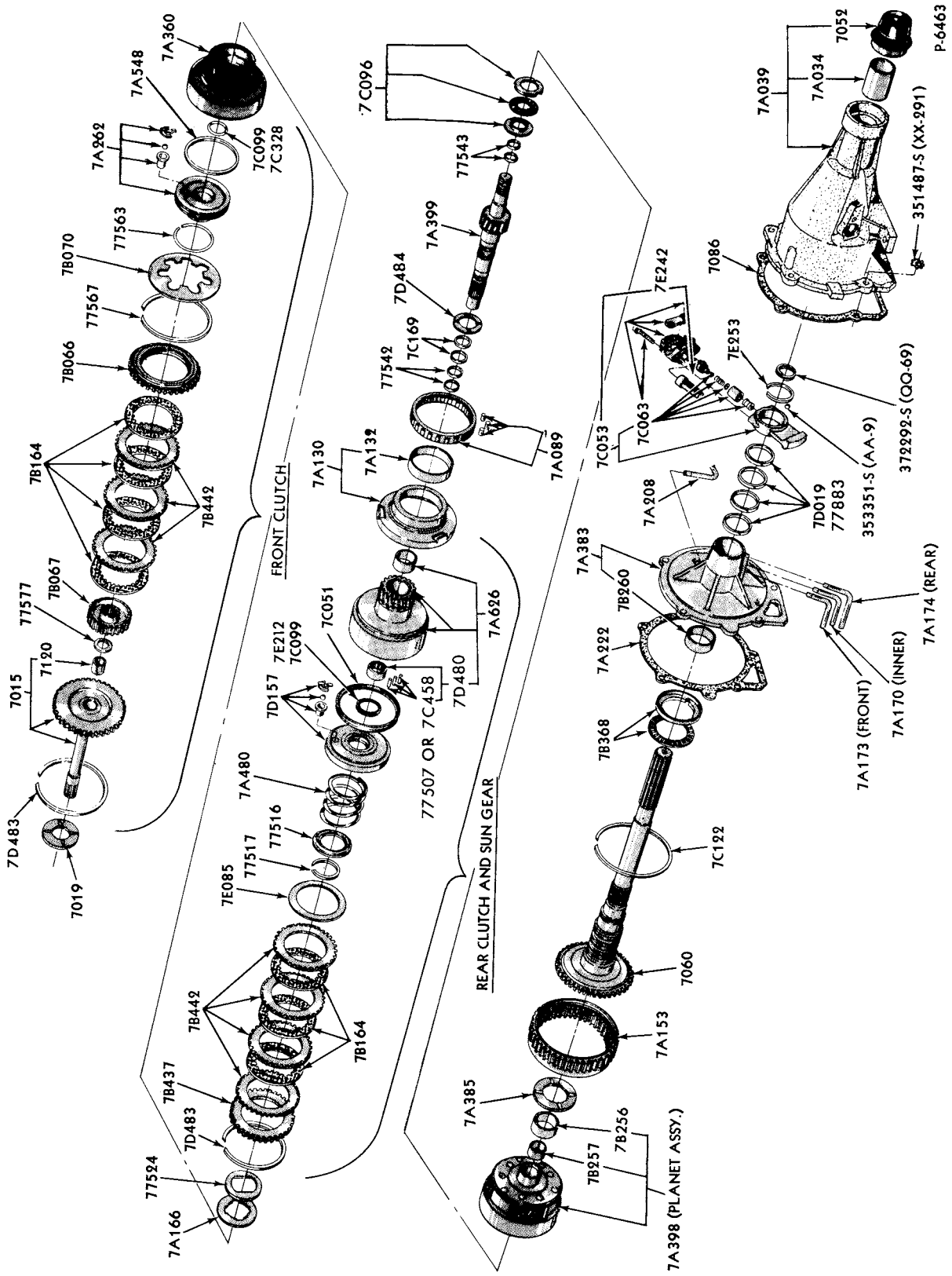

CLUTCHES, GEARS, SHAFTS, EXTENSION and RELATED PARTS-TYPICAL
1973/ F350 and 1973/77 P350/500--6 CYL. 300
1974 F100--8 CYL. 302

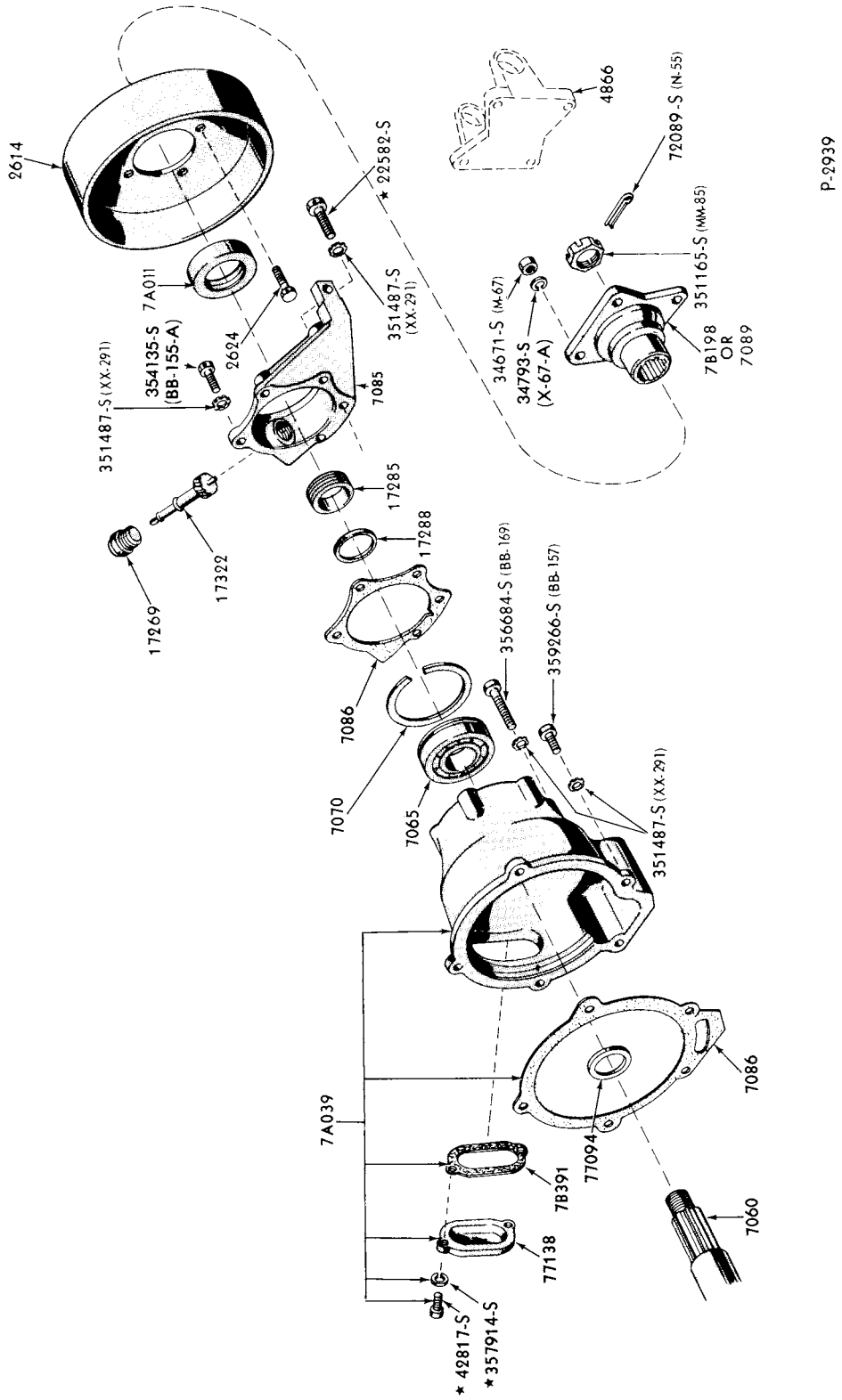

SHORT EXTENSION HOUSING and PARKING BRAKE DRUM
(FMX TRANSMISSION)-TYPICAL
1973/77 F350, 1973/76 P350/400 and 1976/77 P500

COPYRIGHT © 1979 FORD MOTOR COMPANY, DEARBORN, MICHIGAN

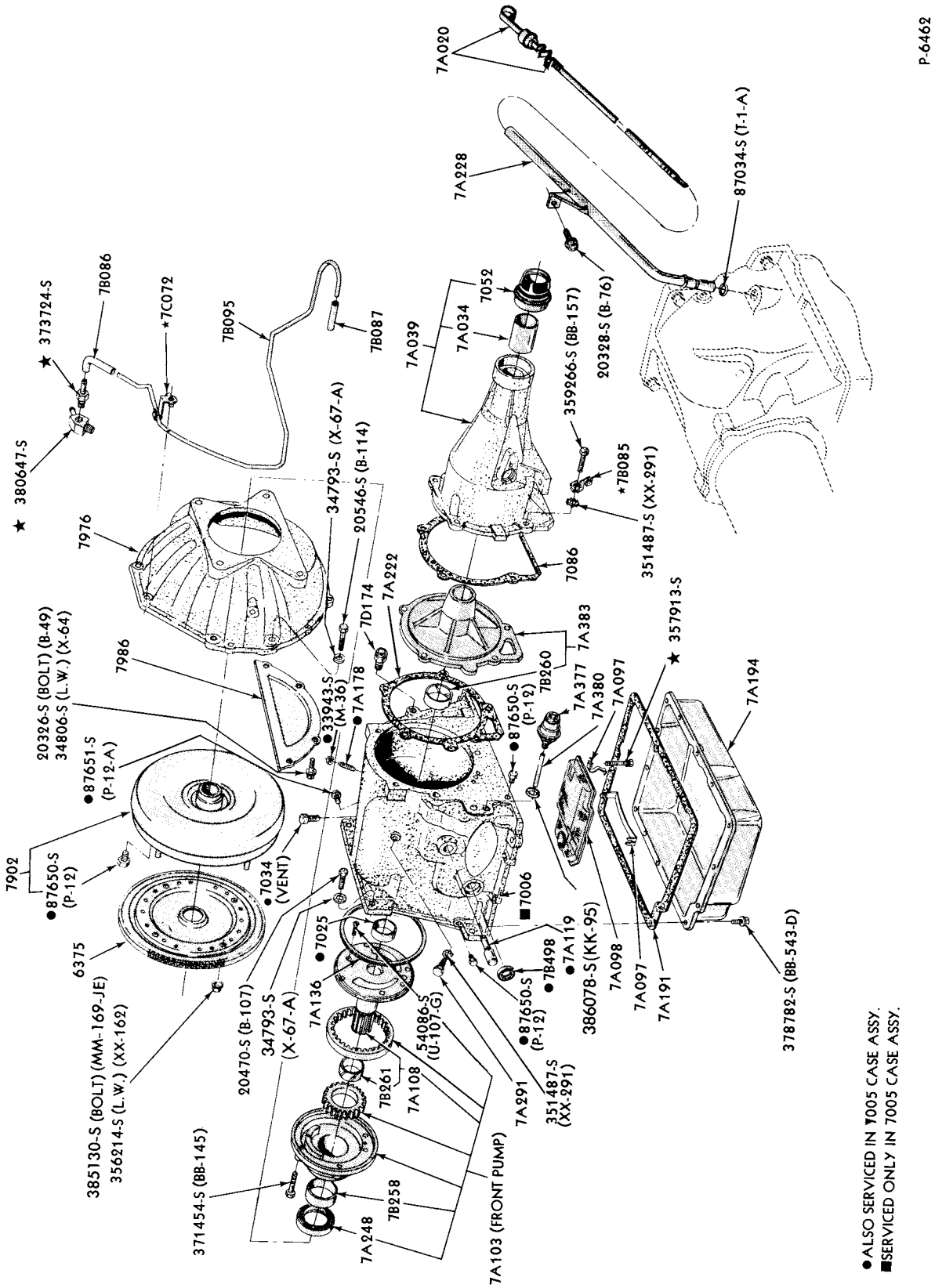

CONVERTER PARTS (FMX TRANSMISSION)-TYPICAL
1973/77 F350 and 1973/77 P350/500--6 CYL. 300
1974 F100--8 CYL. 302

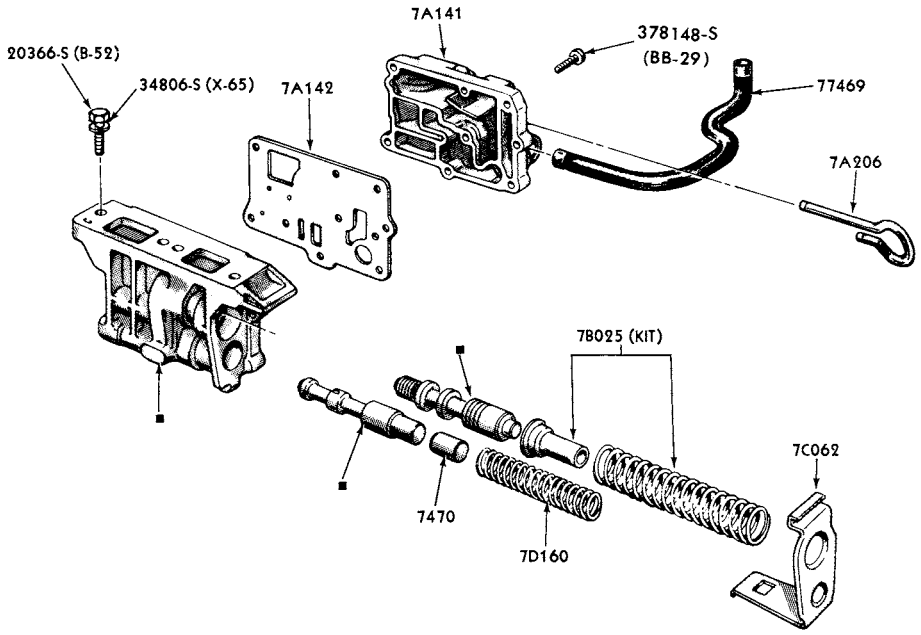

■SERVICED ONLY IN 7A139 REGULATOR ASSY.

P-6470

OIL PRESSURE REGULATOR ASSY. (BASIC 7A139)-TYPICAL
1973/77 F350 and 1973/77 P350/500--6 CYL. 300
1974 F100--8 CYL. 302

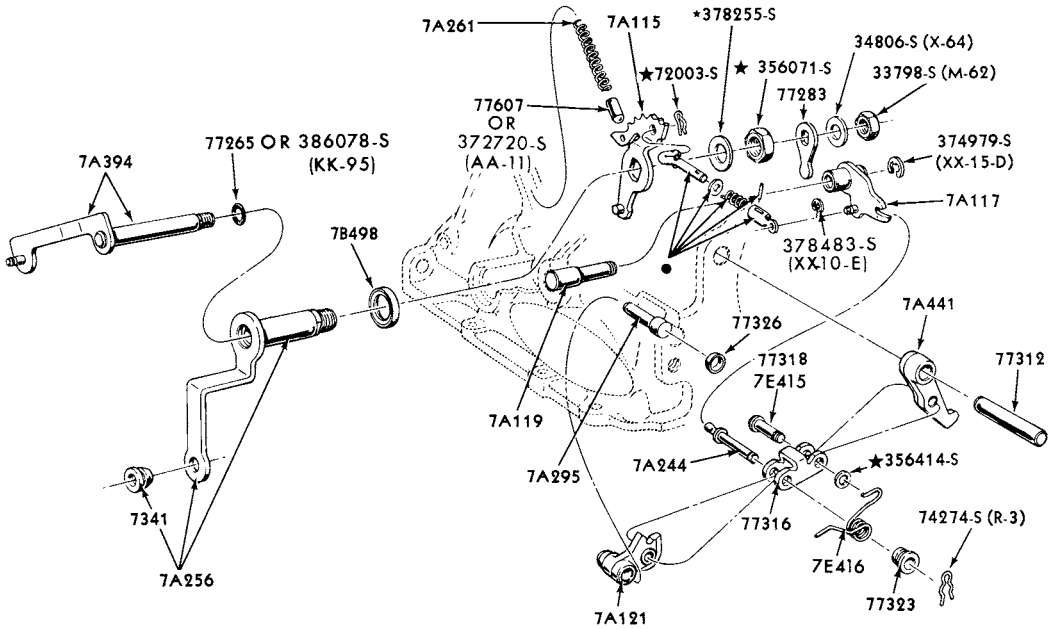

●SERVICED ONLY IN 7A232 ROD ASSY.

P-6471

PARKING PAWL, THROTTLE and MANUAL CONTROL LINKAGE-TYPICAL
1973/77 F350 and 1973/77 P350/500--6 CYL. 300
1974 F100--8 CYL. 302

COPYRIGHT © 1979 – FORD MOTOR COMPANY – DEARBORN, MICHIGAN

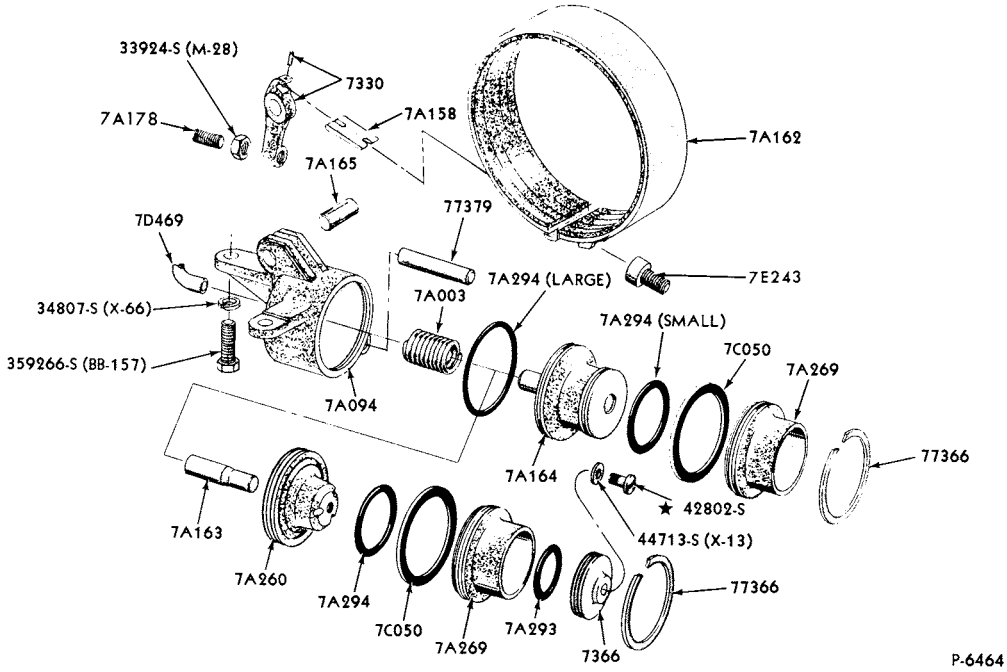

FRONT SERVO and BAND-TYPICAL
1973/77 F350 and 1973/77 P350/500--6 CYL. 300
1974 F100--8 CYL. 302

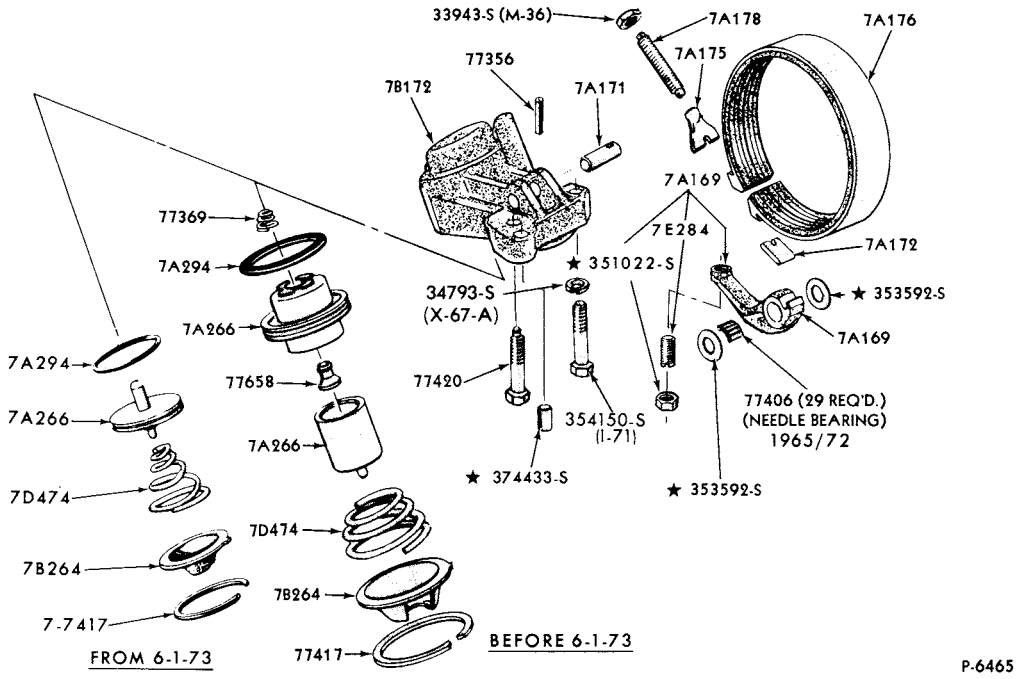

REAR SERVO and BAND-TYPICAL
1973/77 F350 and 1973/77 P350/500--6 CYL. 300
1974 F100--8 CYL. 302

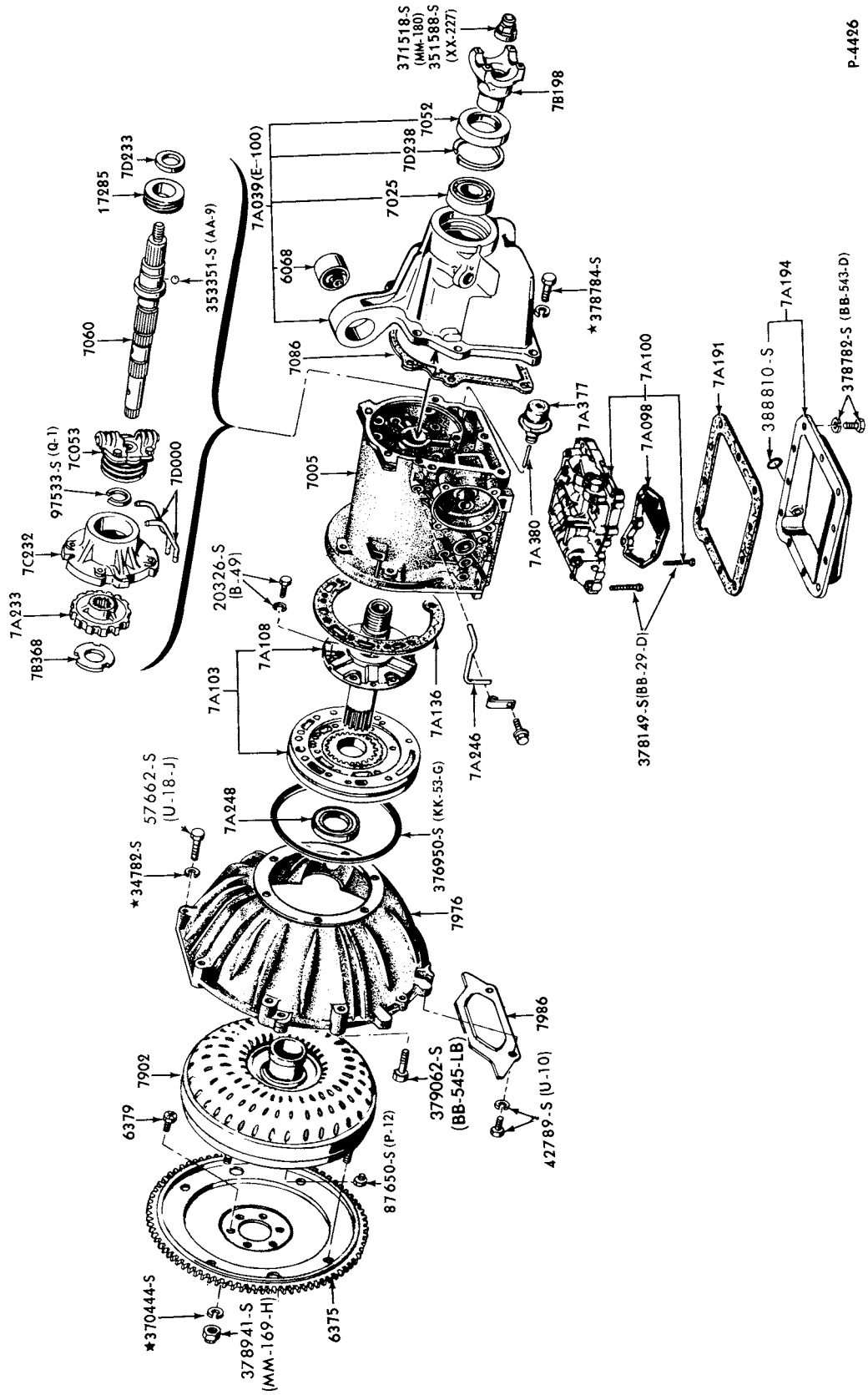

TRANSMISSION CASE, EXTENSION HOUSING and RELATED PARTS (C4 TRANSMISSION)-TYPICAL
1973/ E100/350 and F100/250

COPYRIGHT © 1979 FORD MOTOR COMPANY · DEARBORN, MICHIGAN

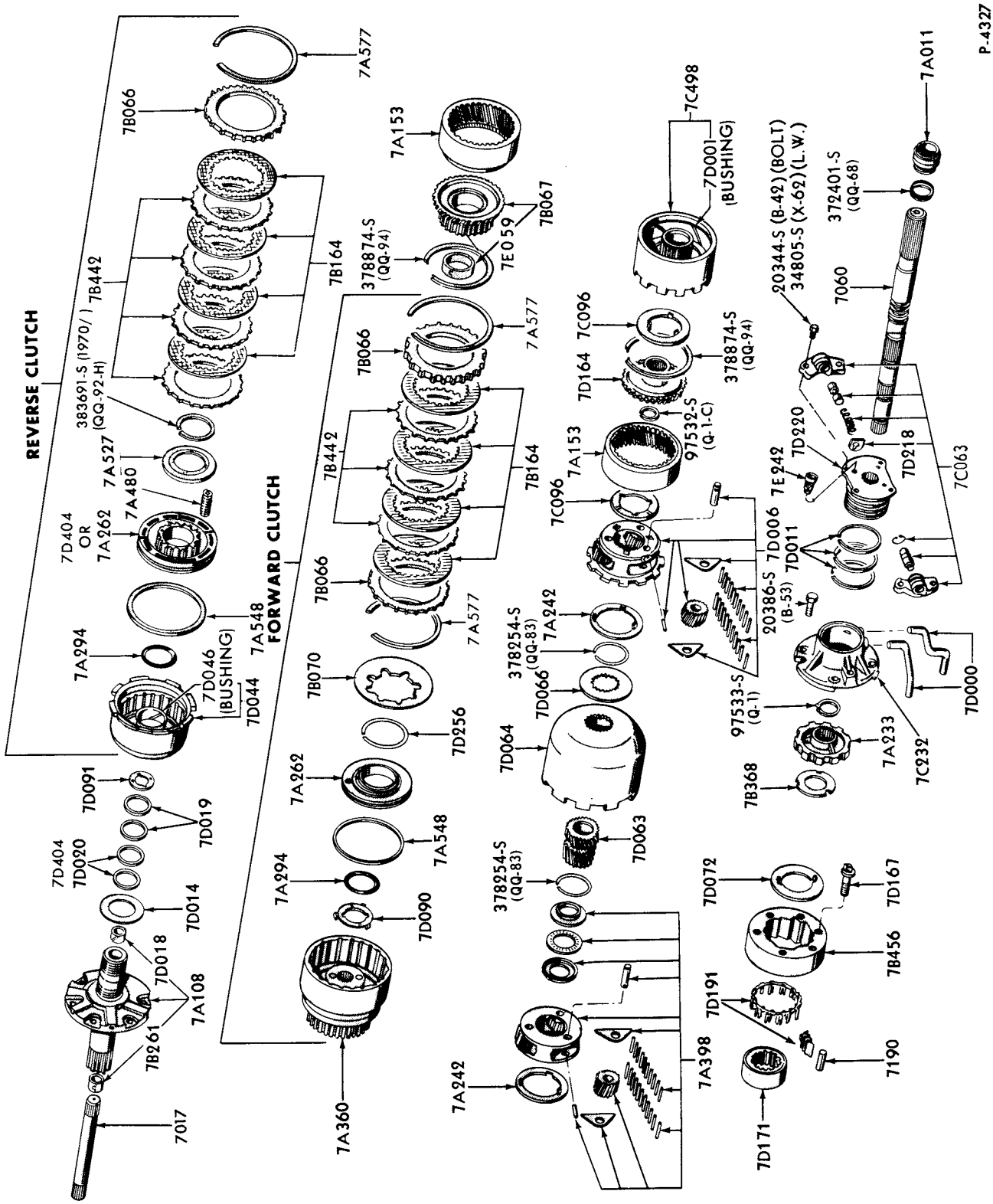

GEARS and SHAFTS (C4 TRANSMISSION)-TYPICAL
1973/ E100/350 and F100/250

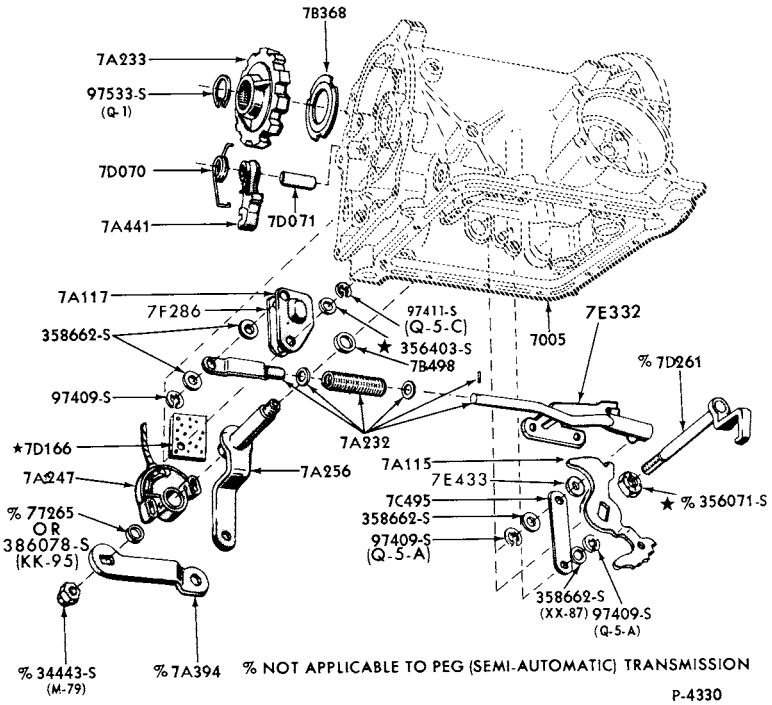

PARKING PAWL, THROTTLE and MANUAL CONTROL LINKAGE (C4 TRANSMISSION)-TYPICAL
1973/ E100/350 and F100/250

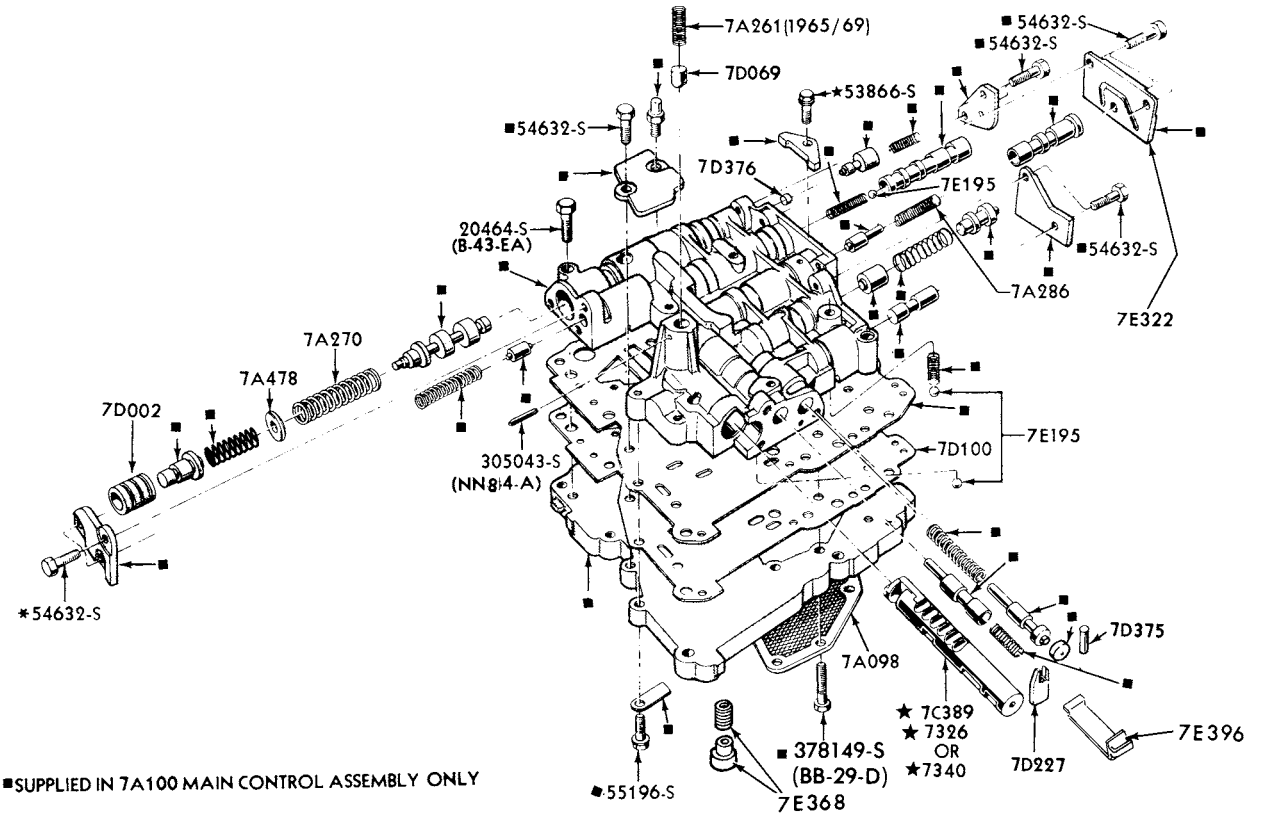

MAIN CONTROL (C4 TRANSMISSION)
1973/ E100/350 and F100/250

COPYRIGHT © 1979 FORD MOTOR COMPANY, DEARBORN, MICHIGAN

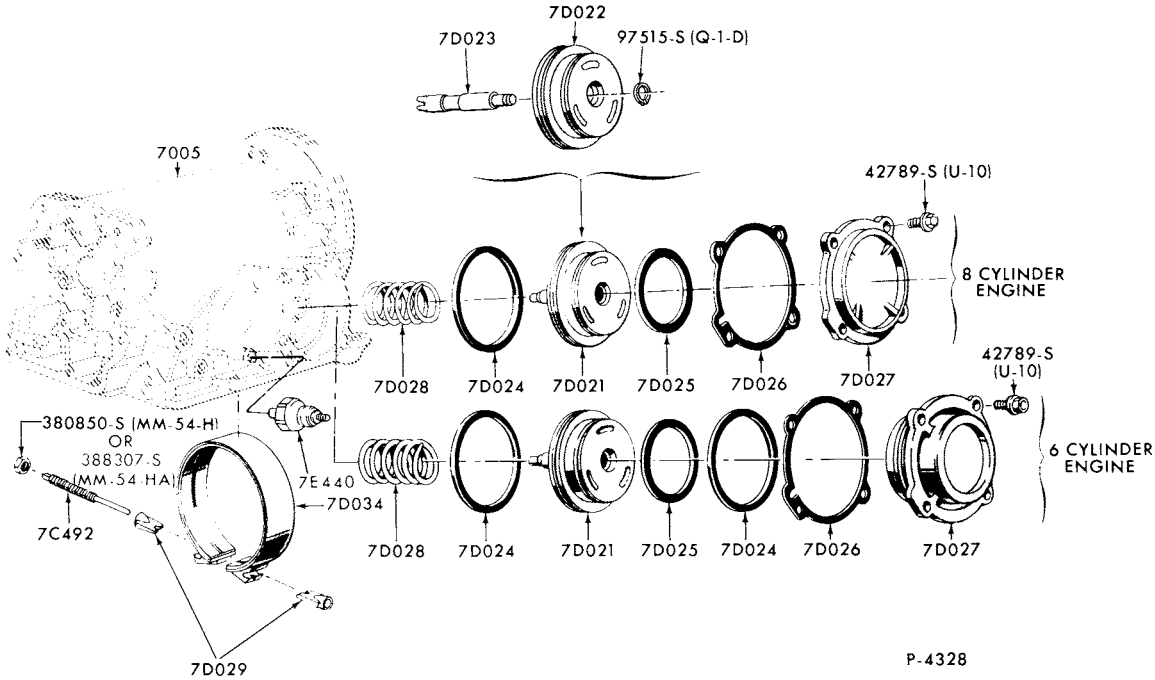

FRONT SERVO and BAND (C4 TRANSMISSION)
1973/ E100/350 and F100/250

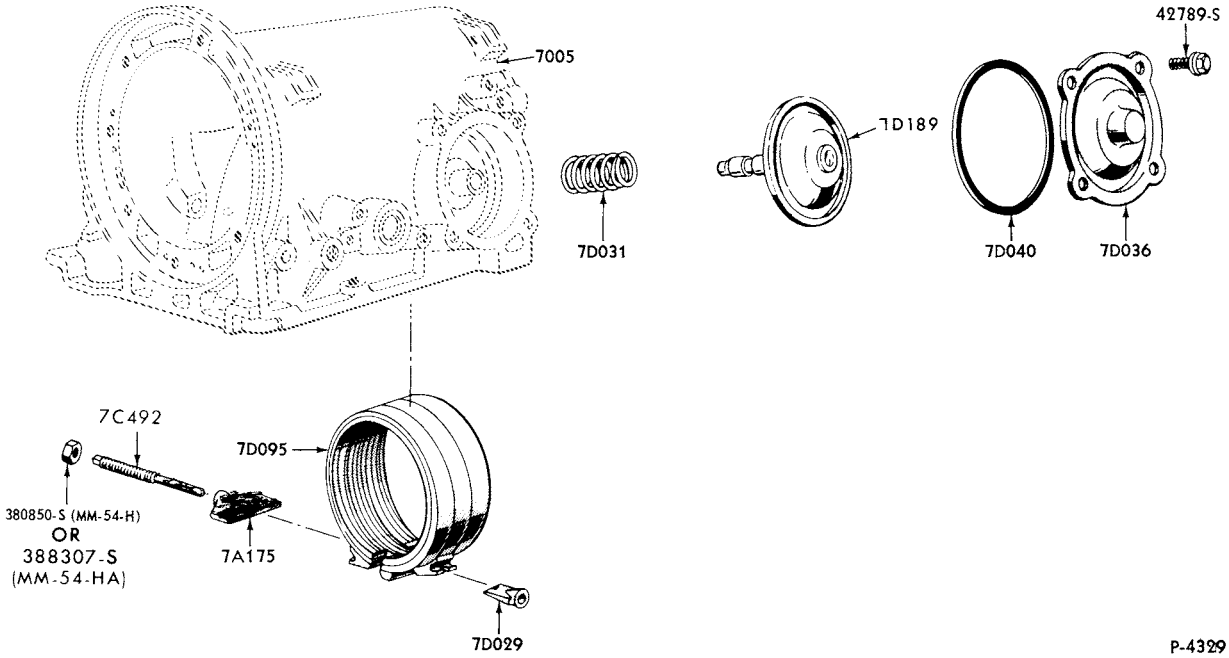

REAR SERVO and BAND (C4 TRANSMISSION)
1973/ E100/350 and F100/250

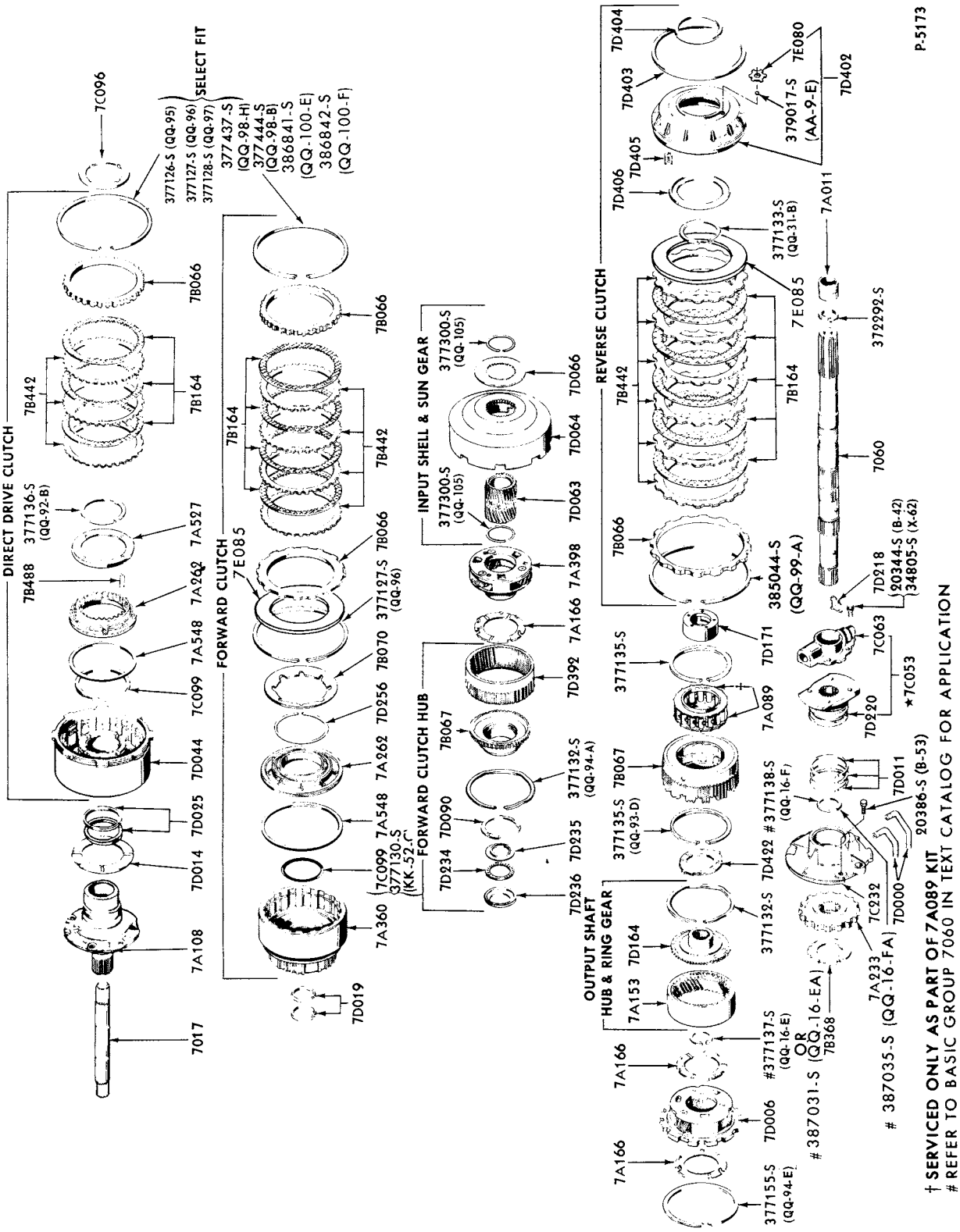

GEARS and SHAFTS (C6 TRANSMISSION)-TYPICAL
1973/ F100/350 and 1973/76 M450/500

COPYRIGHT © 1979 FORD MOTOR-DEARBORN, MICHIGAN
COMPANY

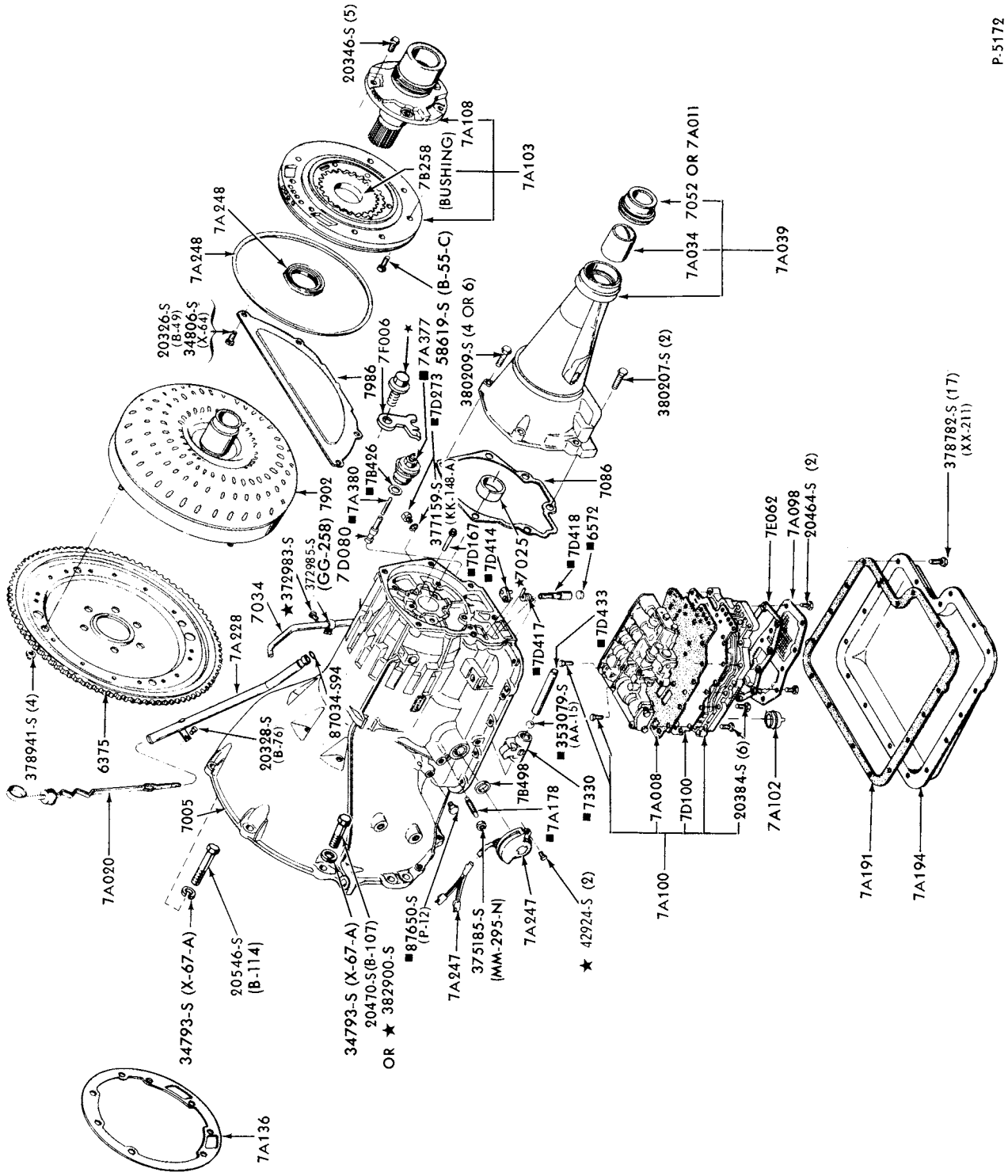

TRANSMISSION CASE and EXTENSION PARTS (C6 TRANSMISSION)

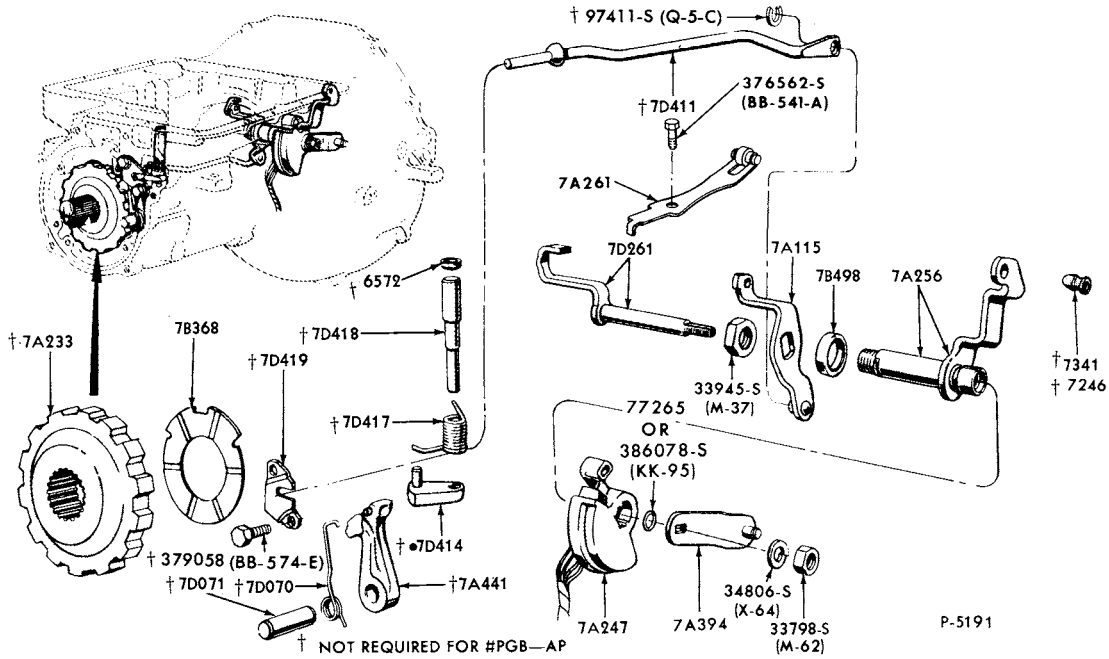

PARKING PAWL, THROTTLE and MANUAL CONTROL LINKAGE (C6 TRANSMISSION)
1973/ F100/350
1973/76 M450/500

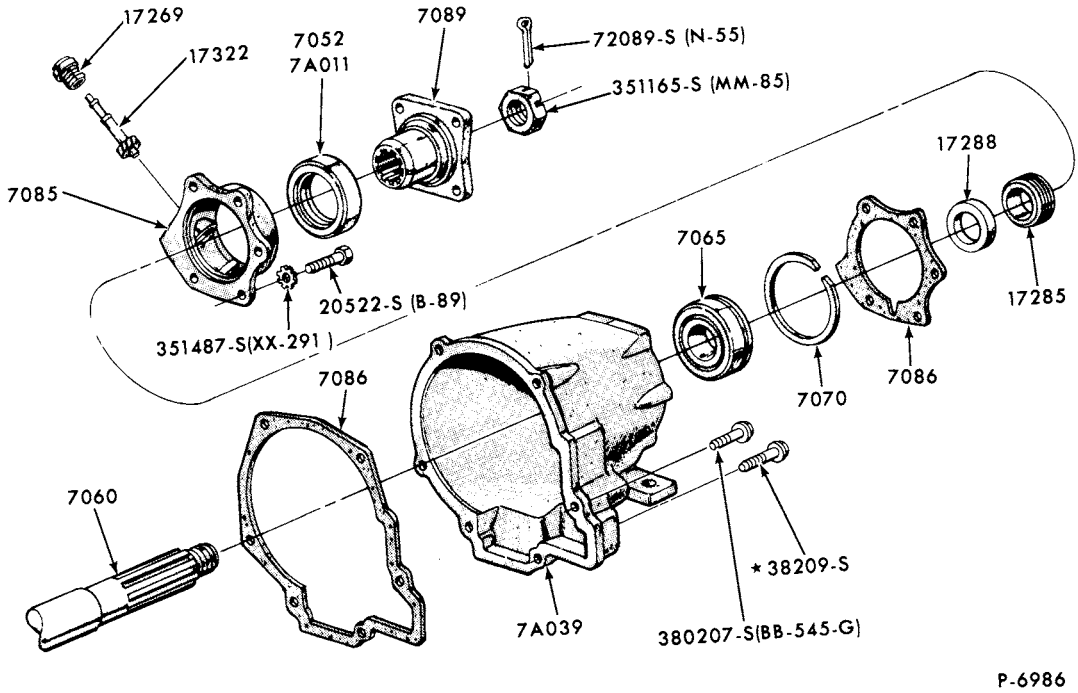

TRANSMISSION EXTENSION HOUSING and RELATED PARTS (C6 TRANSMISSION)
1973/ F100/350
1973/76 M450/500

COPYRIGHT © 1979 FORD MOTOR COMPANY, DEARBORN, MICHIGAN

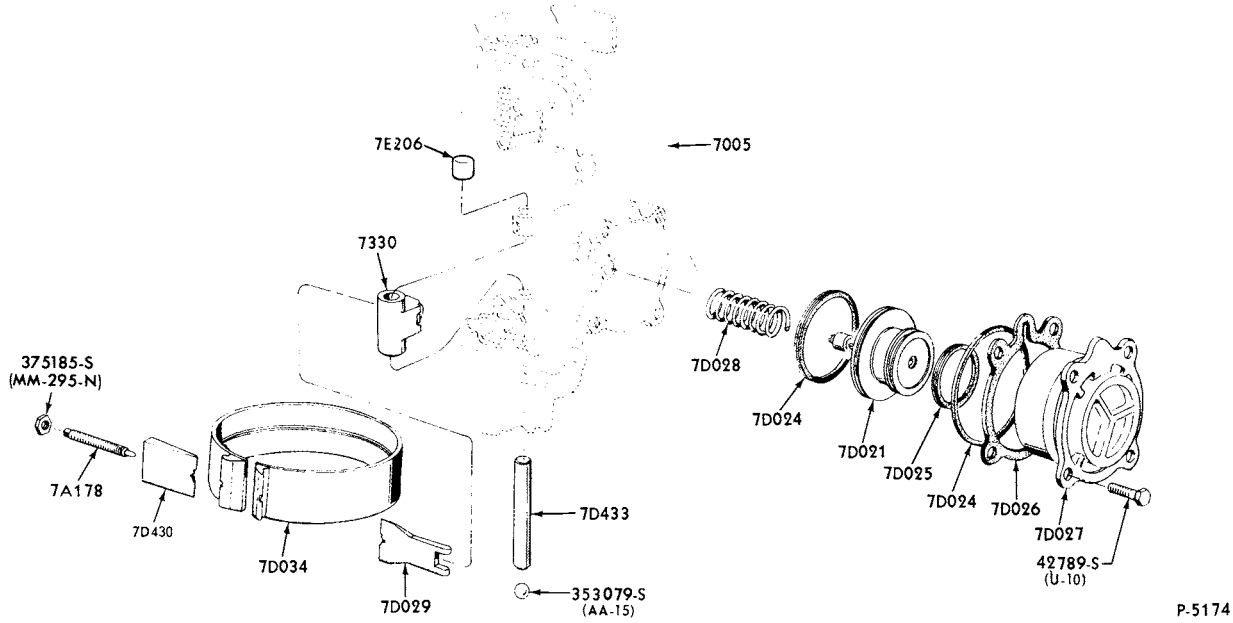

INTERMEDIATE SERVO and BAND (C6 TRANSMISSION)-TYPICAL
1973/ F100/350
1973/76 M450/500

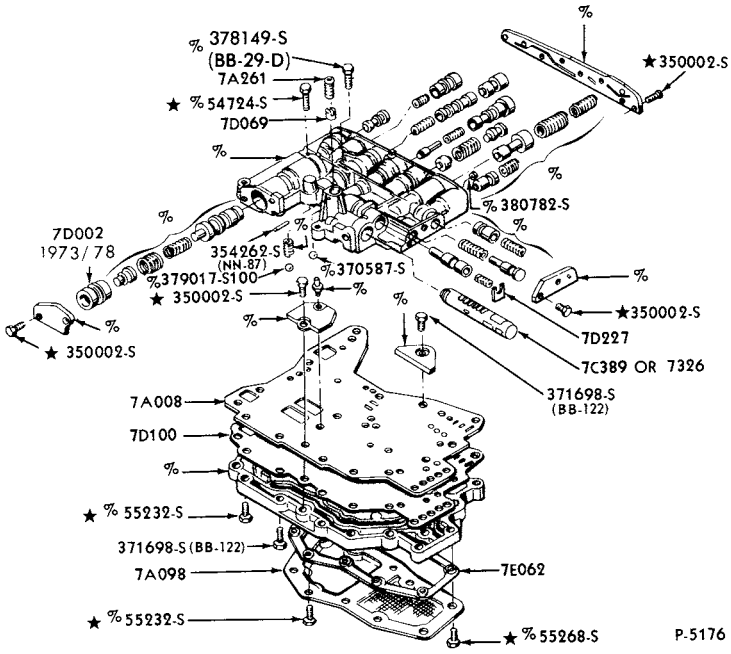

MAIN CONTROL (C6 TRANSMISSION)
1973/ F100/350
1973/76 M450/500

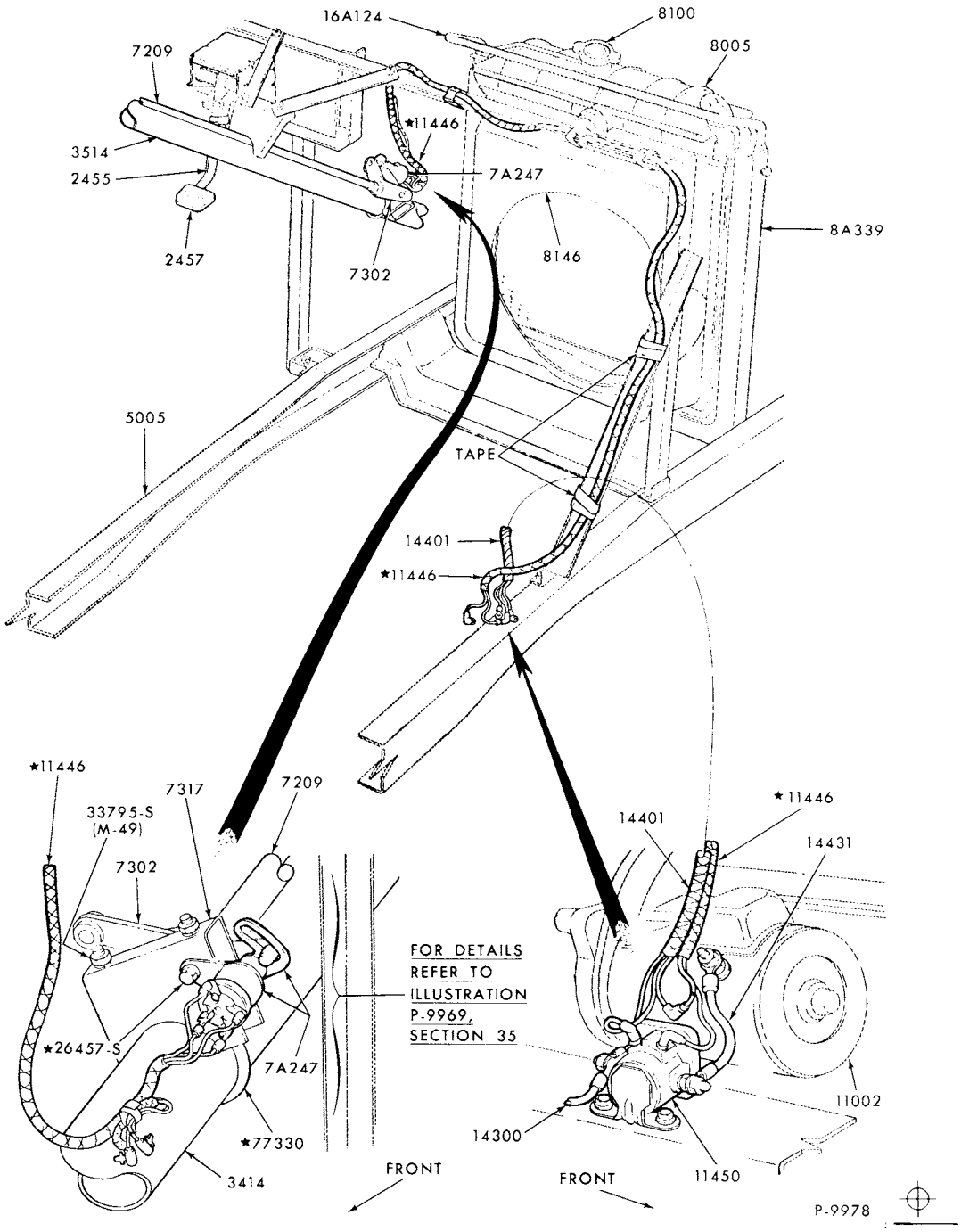

GEARSHIFT COLUMN and WIRING INSTALLATION (CRUISE-O-MATIC TRANSMISSION)
1973/77 P350/500

COPYRIGHT © 1979 - FORD MOTOR COMPANY - DEARBORN, MICHIGAN

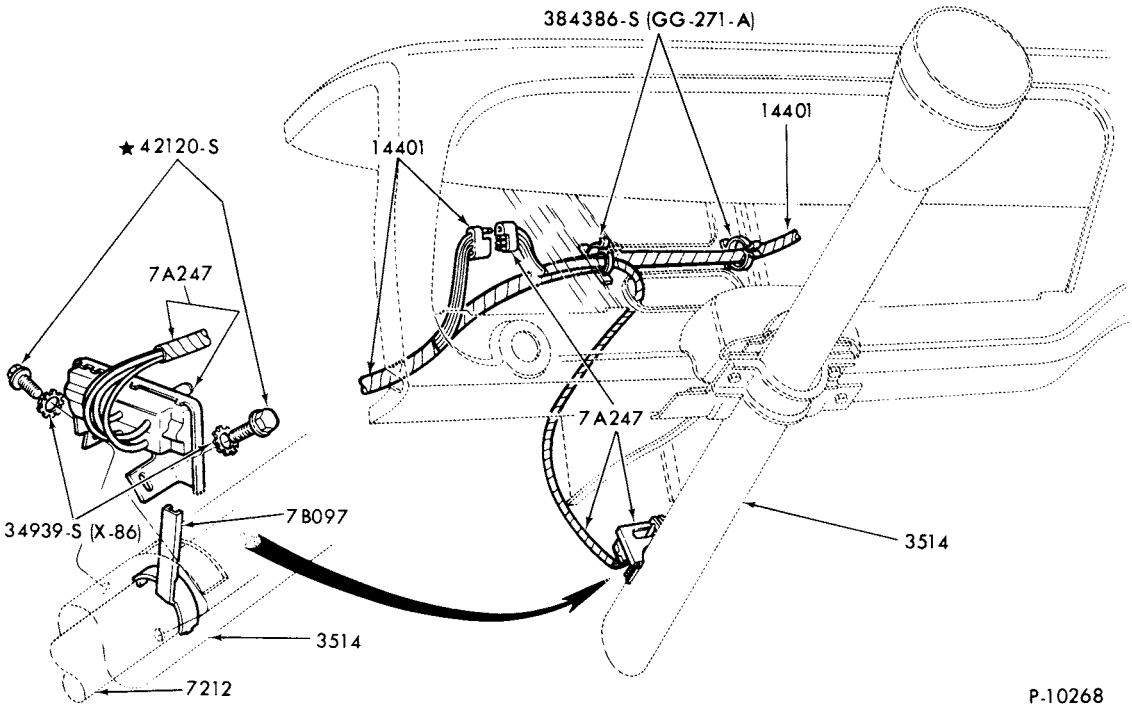

NEUTRAL SWITCH and WIRING
1973/77 F350

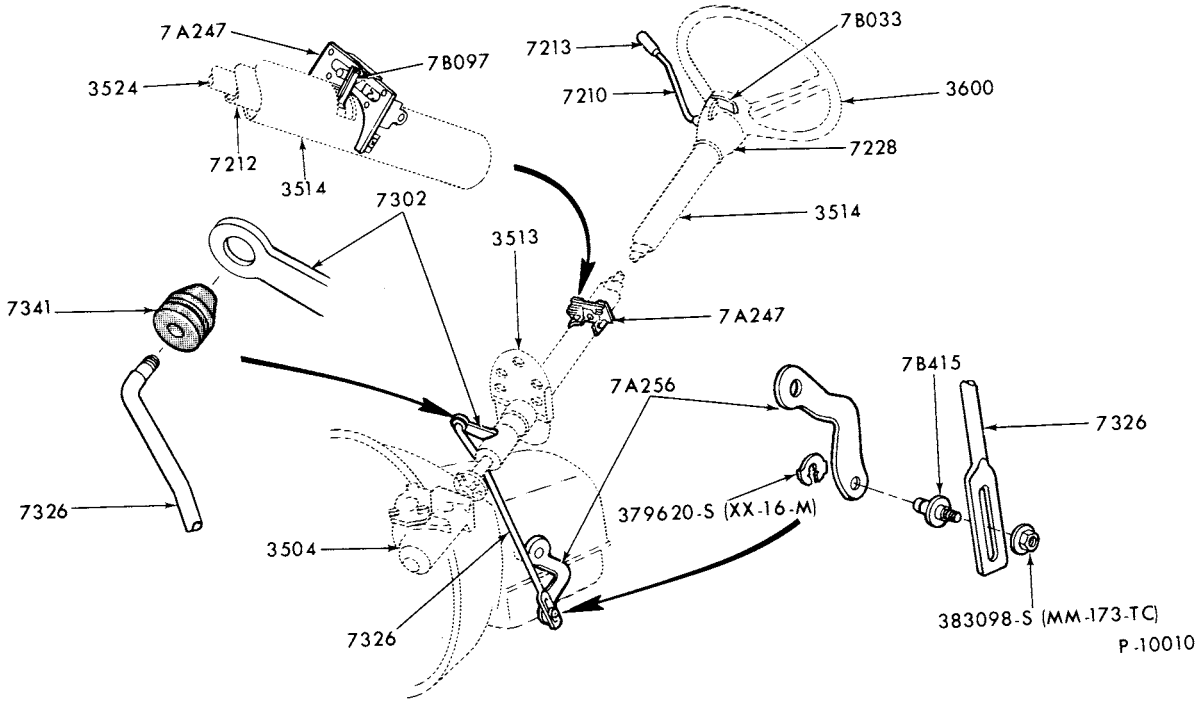

GEARSHIFT CONTROLS (FMX TRANSMISSION)
1973/77 F350

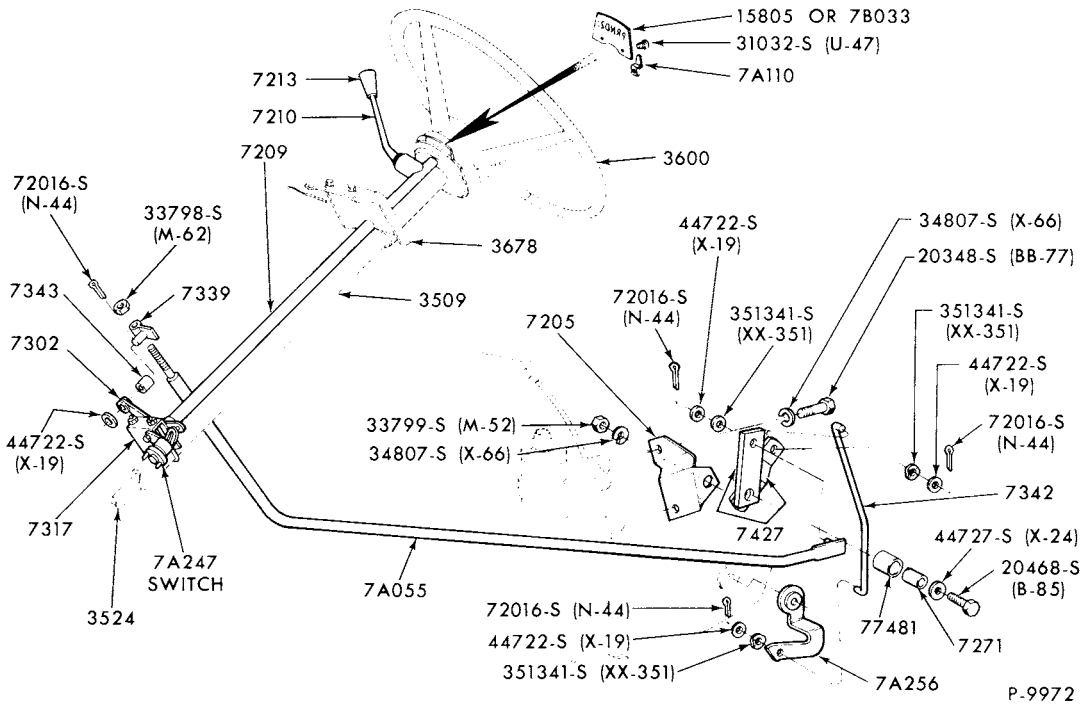

GEARSHIFT COLUMN (CRUISE-O-MATIC TRANSMISSION)
1973/77 P350/500

COPYRIGHT © 1979 FORD MOTOR COMPANY, DEARBORN, MICHIGAN

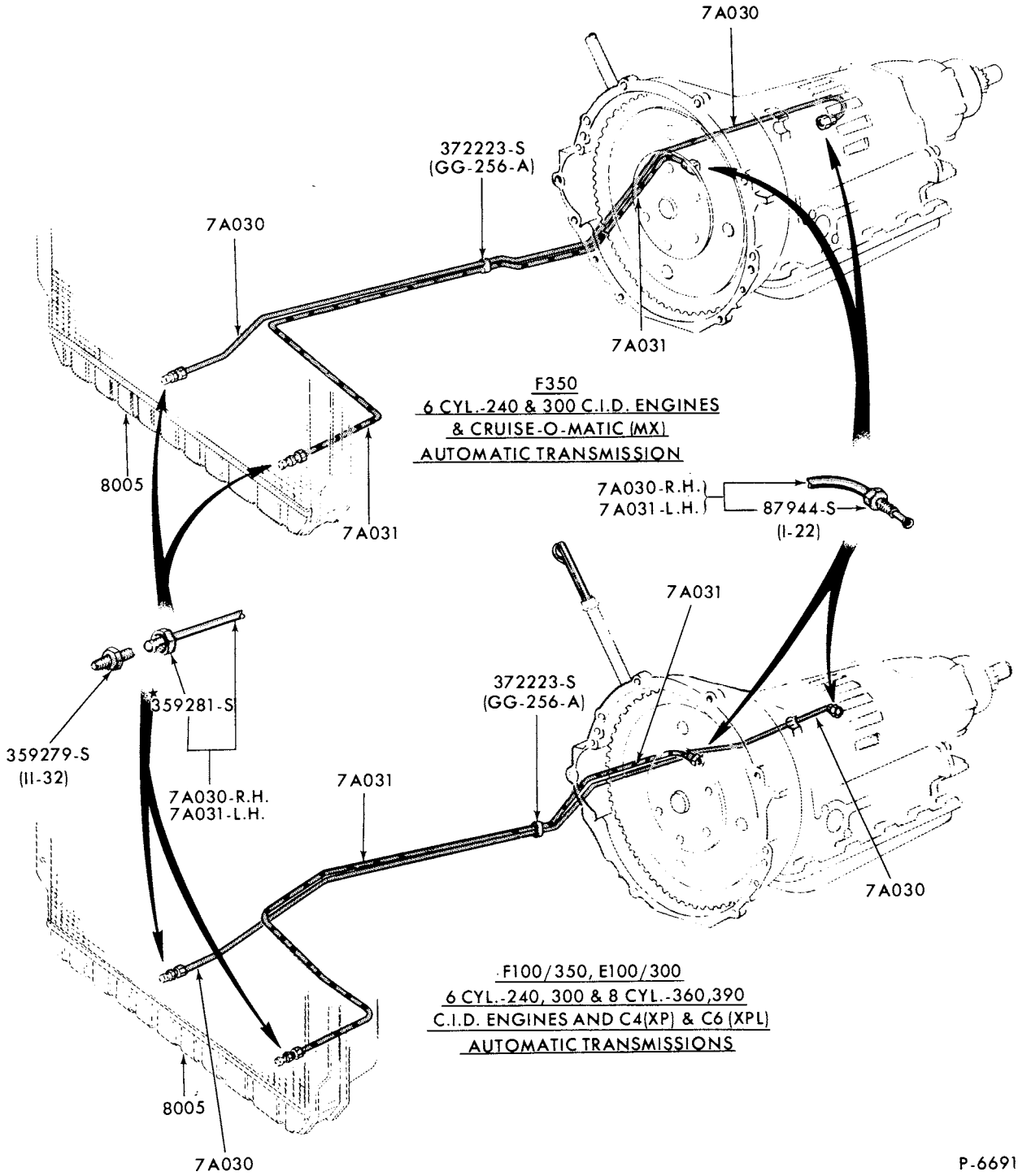

TRANSMISSION OIL COOLING SYSTEM (CRUISE-O-MATIC TRANSMISSION)-TYPICAL
1973/ P350/500

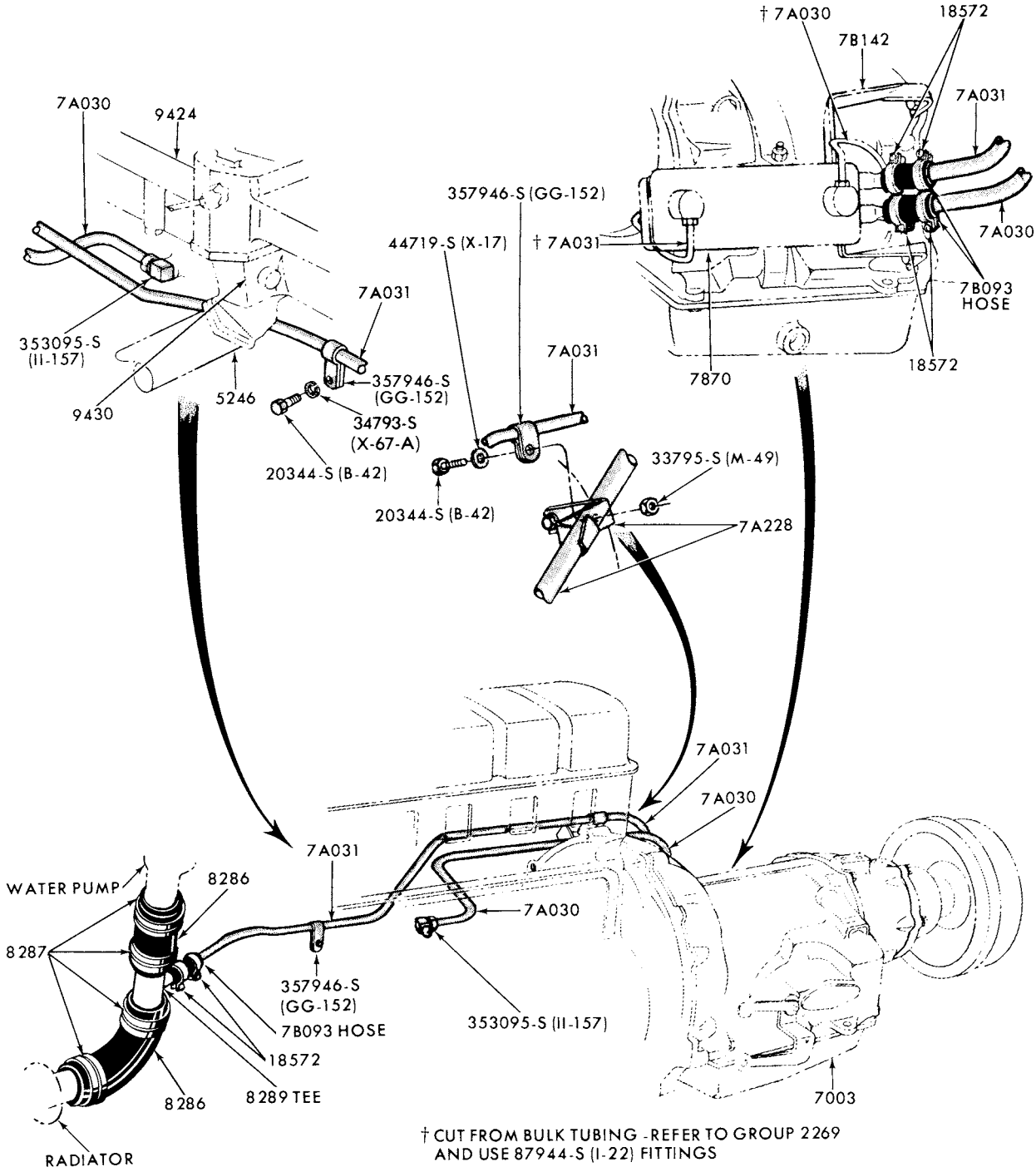

† CUT FROM BULK TUBING - REFER TO GROUP 2269
AND USE 87944-S (I-22) FITTINGS

P-6692

TRANSMISSION OIL COOLING SYSTEM (FMX TRANSMISSION)-TYPICAL
1973/77 P350/500

COPYRIGHT © 1979 — FORD MOTOR COMPANY, DEARBORN, MICHIGAN

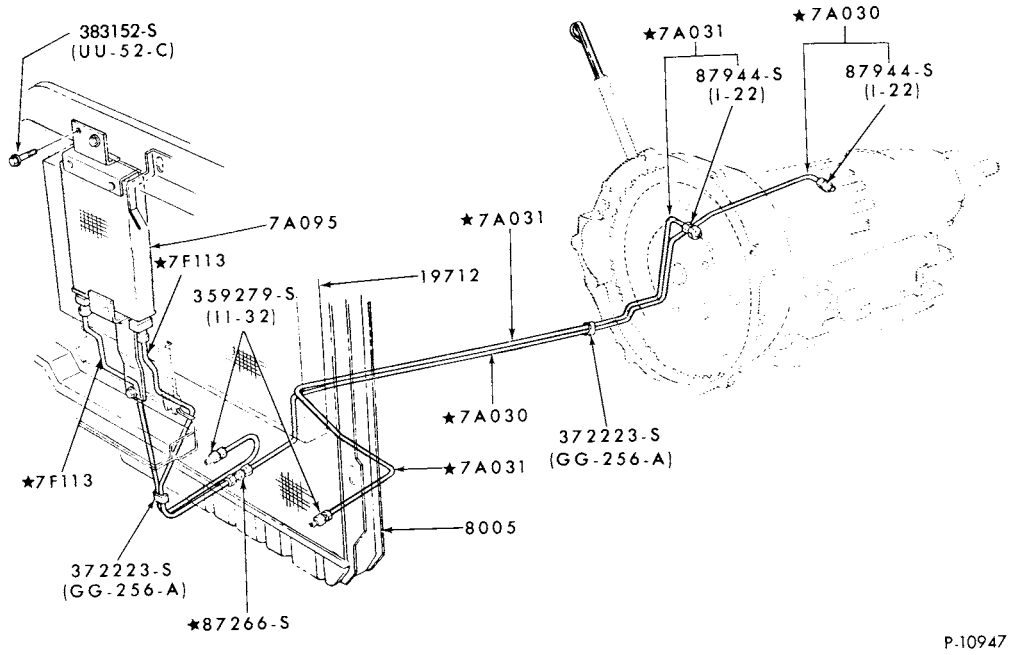

TRANSMISSION OIL COOLING SYSTEM (FMX TRANSMISSION)-TYPICAL
1974/77 F350

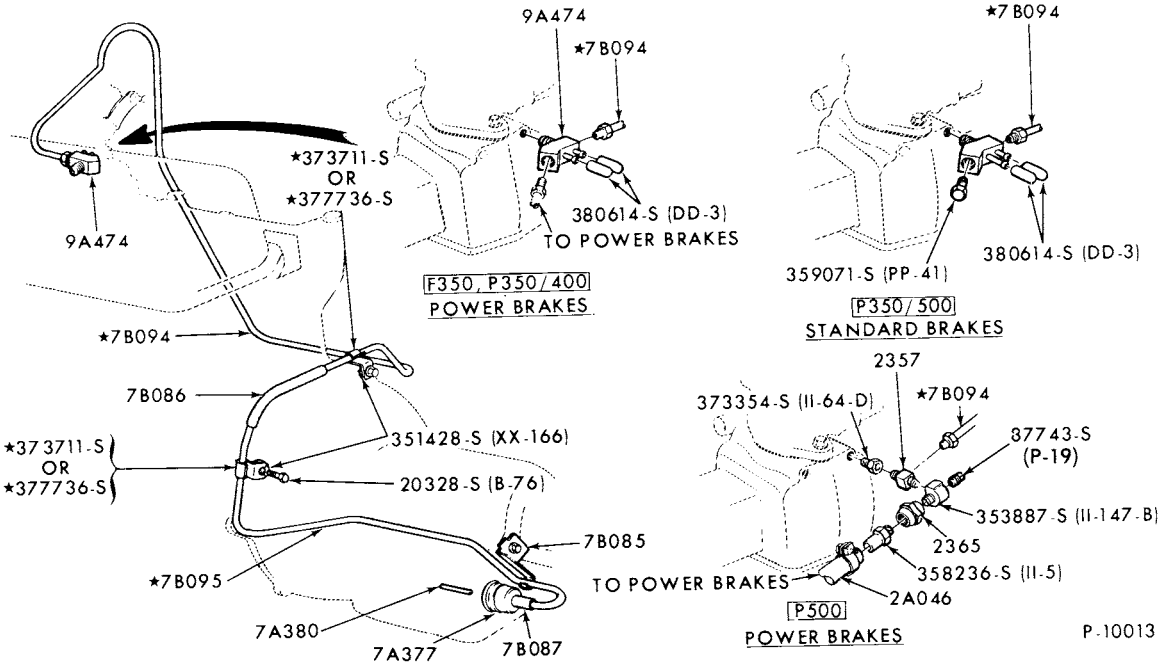

VACUUM TUBE INSTALLATION (FMX TRANSMISSION)
1973/77 F350 and 1973/77 P350/500

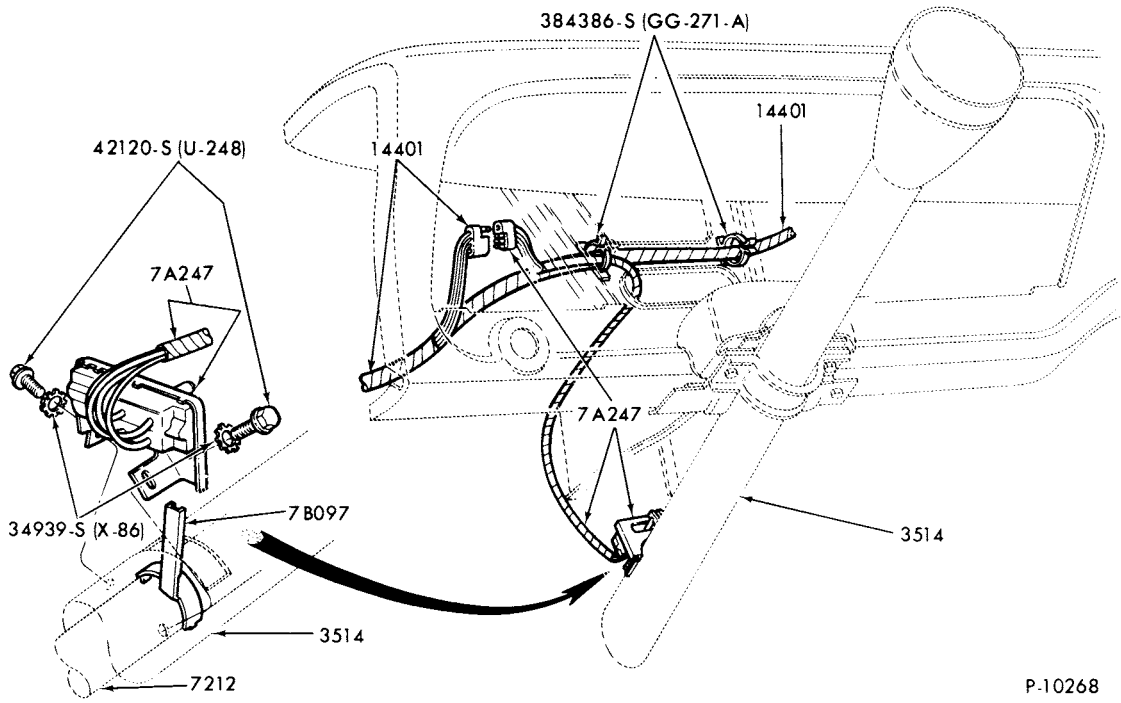

NEUTRAL SWITCH and WIRING
1973/ F100/350

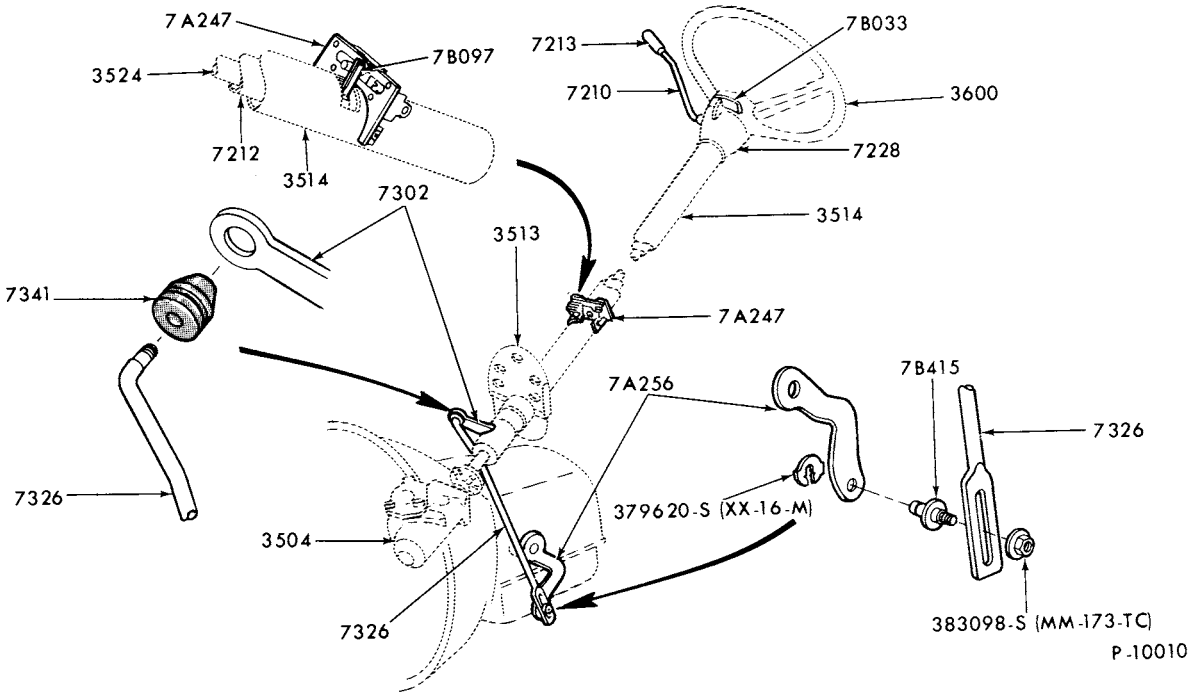

GEARSHIFT CONTROLS (C4 and C6 TRANSMISSION)
1973/ F100/350

COPYRIGHT © 1979 FORD MOTOR COMPANY, DEARBORN, MICHIGAN

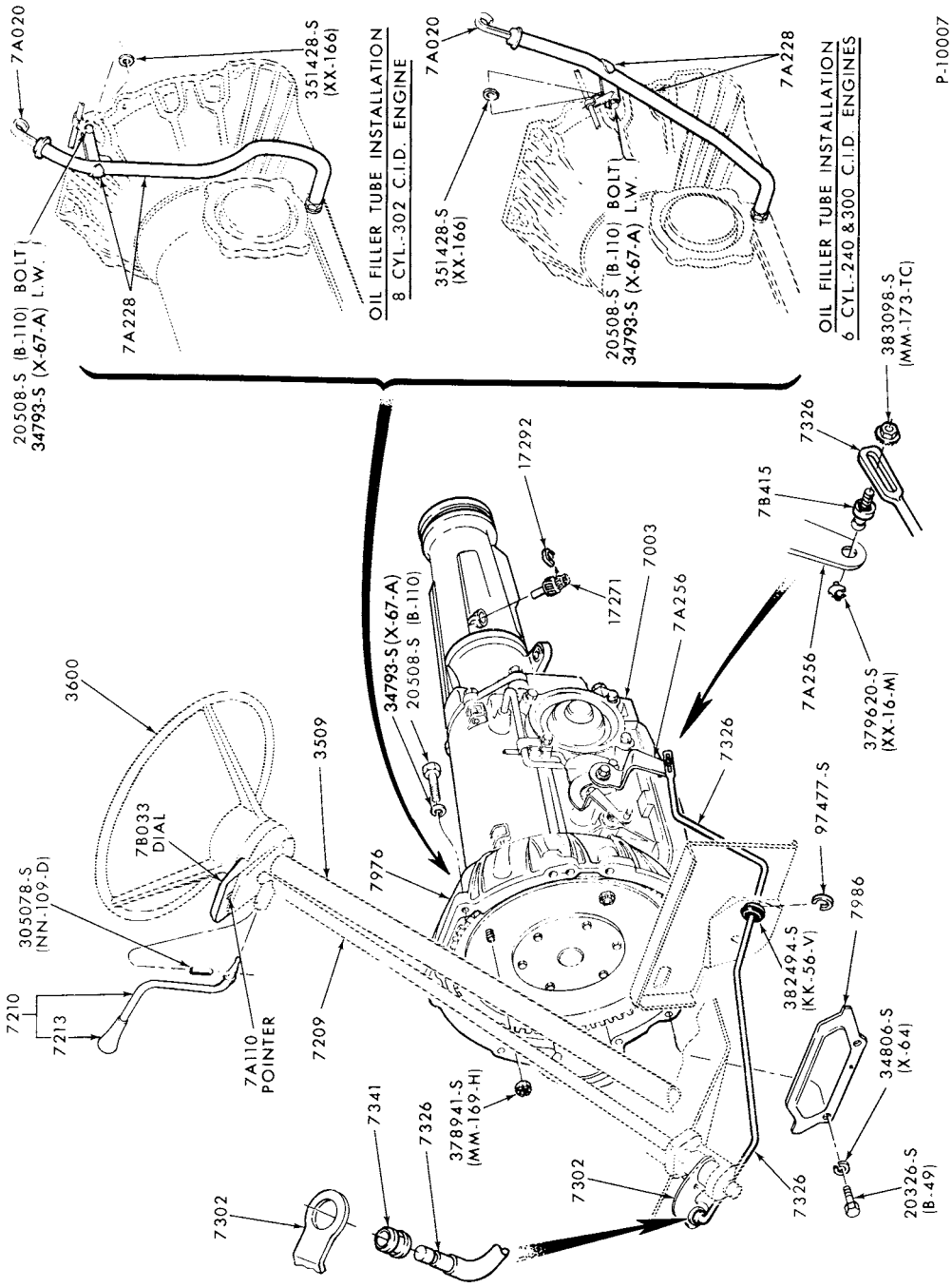

GEARSHIFT CONTROLS (C4 TRANSMISSION)
1973/74 E100/300

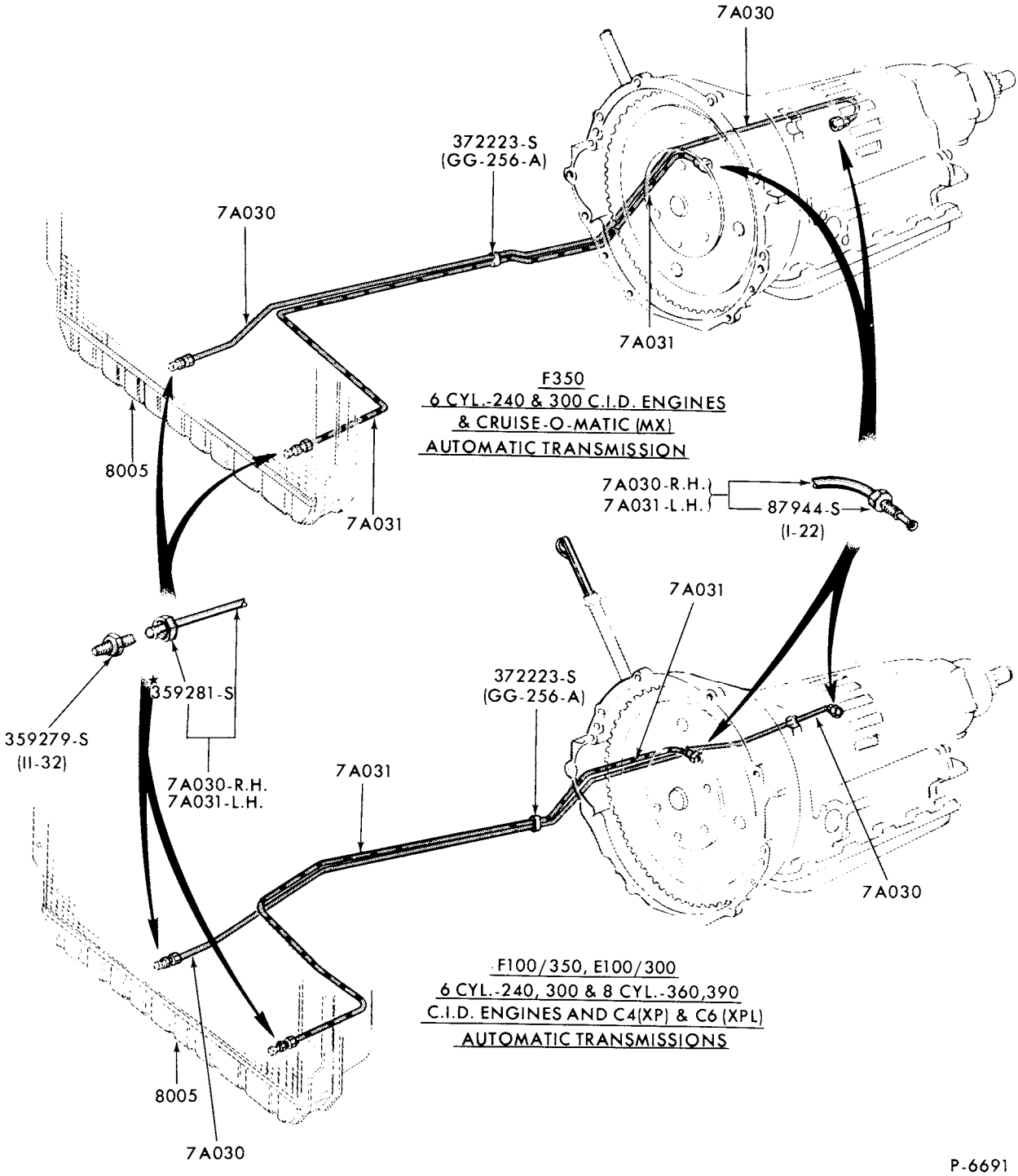

TRANSMISSION OIL COOLING SYSTEM (C4 TRANSMISSION)-TYPICAL
1973/ E100/350 and F100/250

COPYRIGHT © 1979 FORD MOTOR COMPANY DEARBORN, MICHIGAN

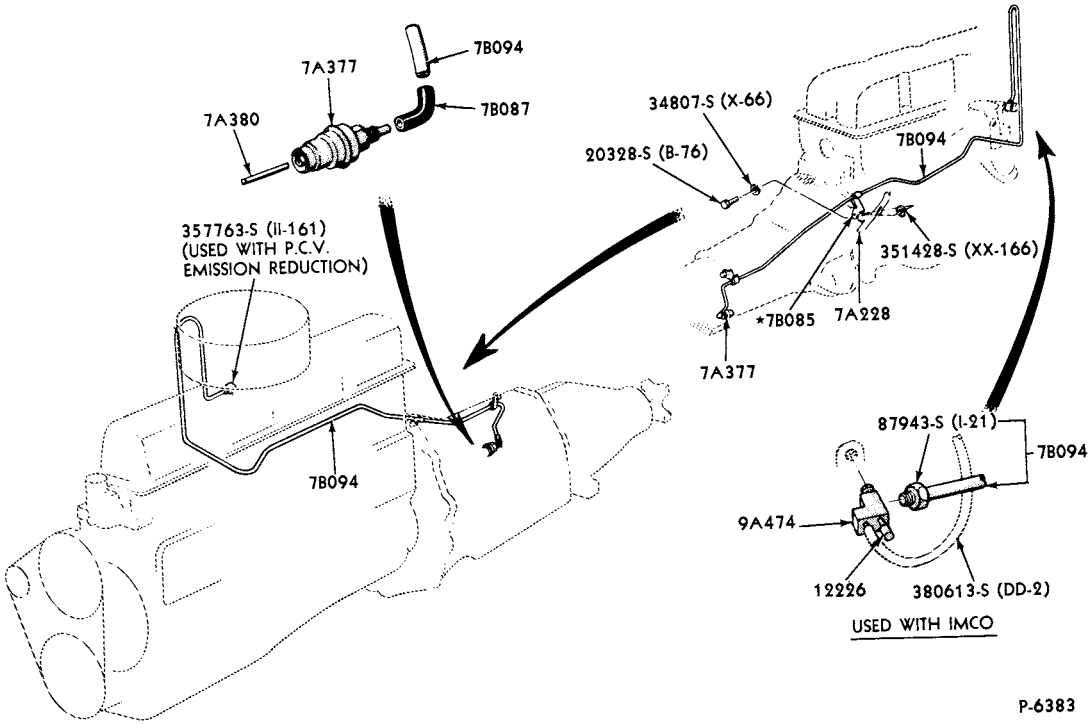

VACUUM TUBE INSTALLATION (C4 TRANSMISSION)
1973 E100/300--6 CYL. 240

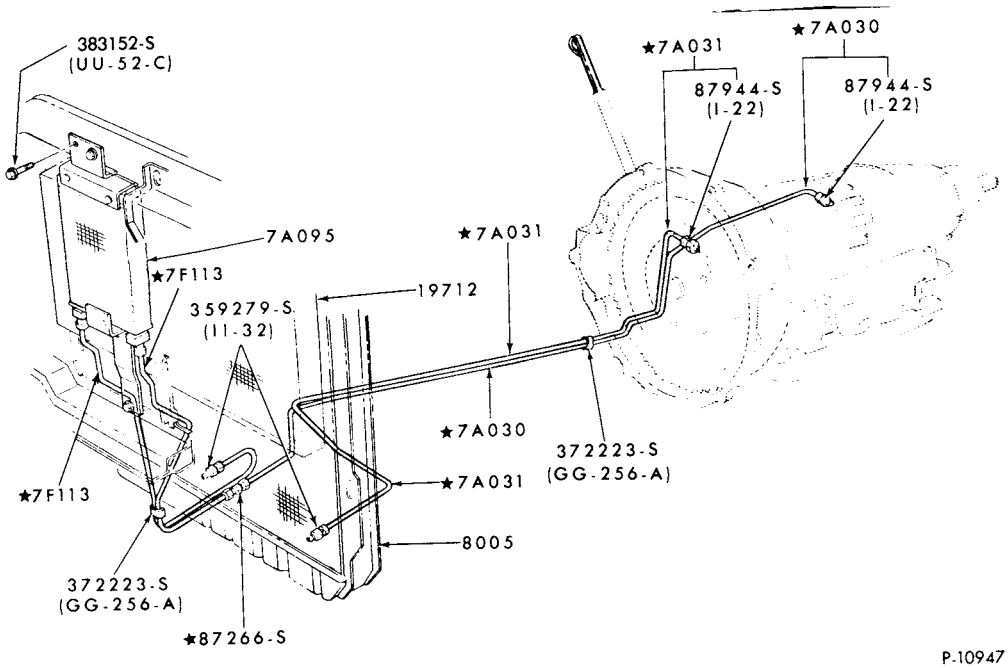

TRANSMISSION OIL COOLING SYSTEM (C4 TRANSMISSION)
1974/ F100--8 CYL. 302

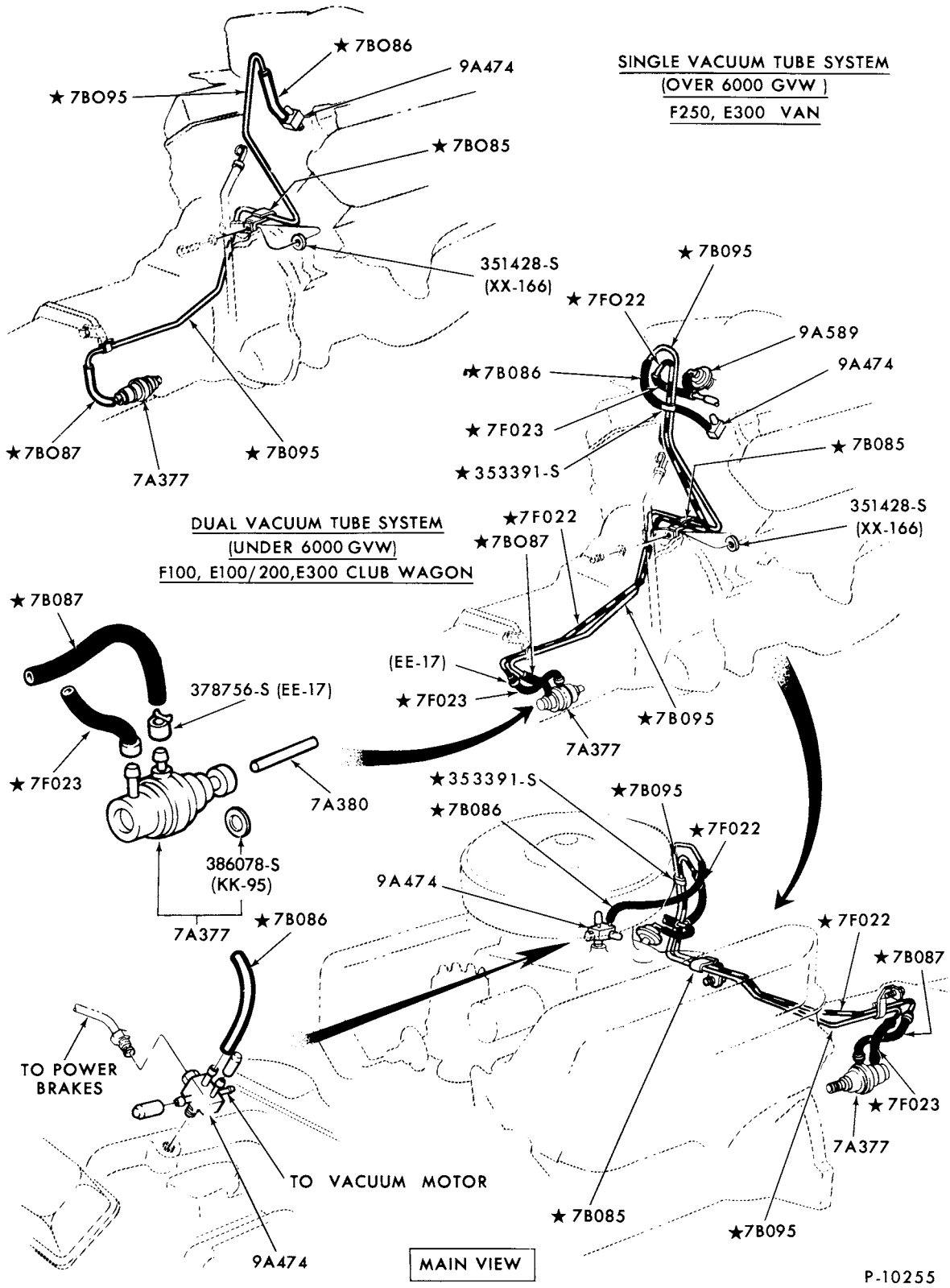

VACUUM TUBE INSTALLATION (C4 TRANSMISSION)
1973/77 E100/350--8 CYL. 302

COPYRIGHT © 1979 – FORD MOTOR COMPANY DEARBORN, MICHIGAN

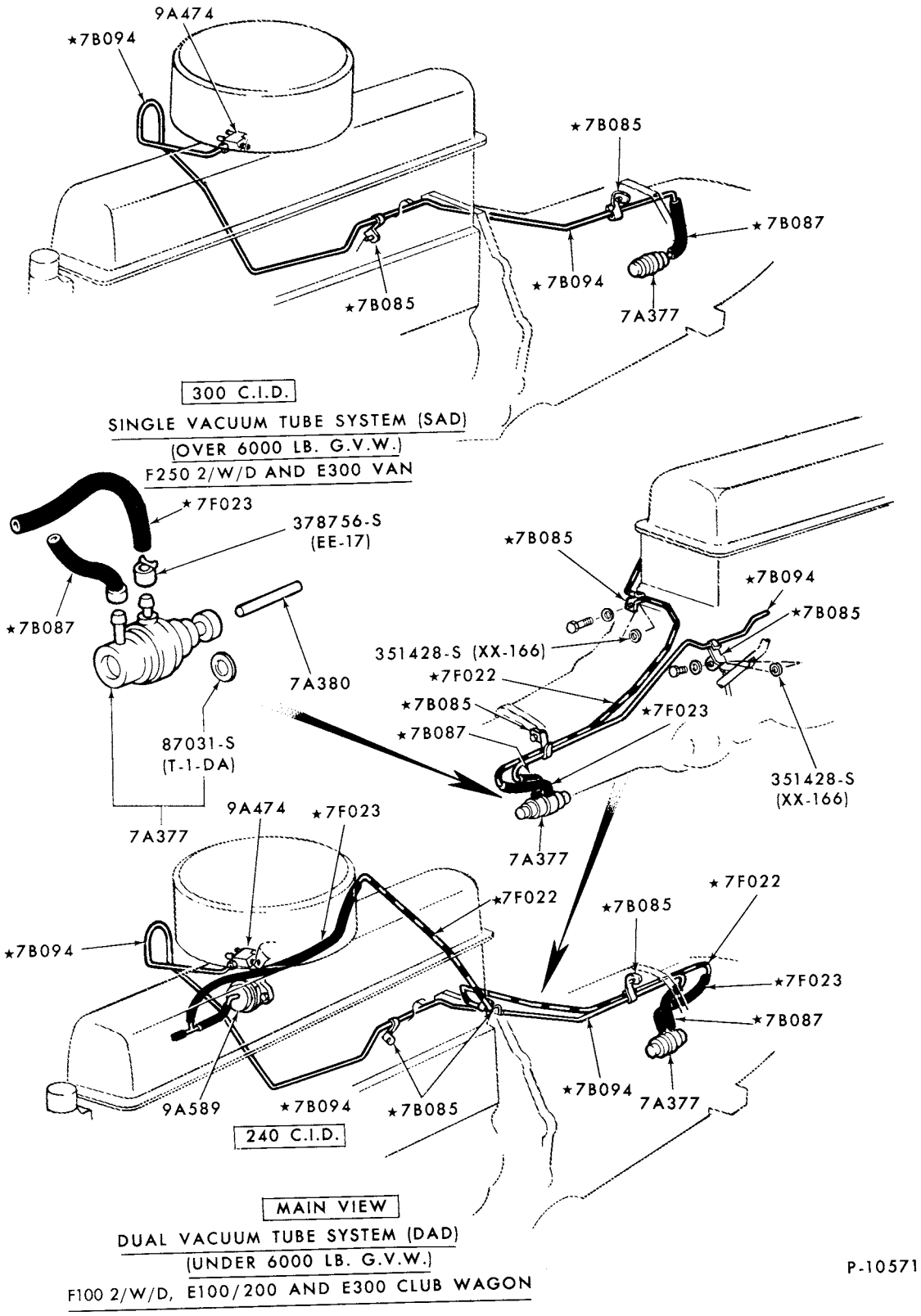

VACUUM TUBE INSTALLATION (C4 TRANSMISSION)
1973/ E100/350, F100/250--2/W/D and 6 CYL.

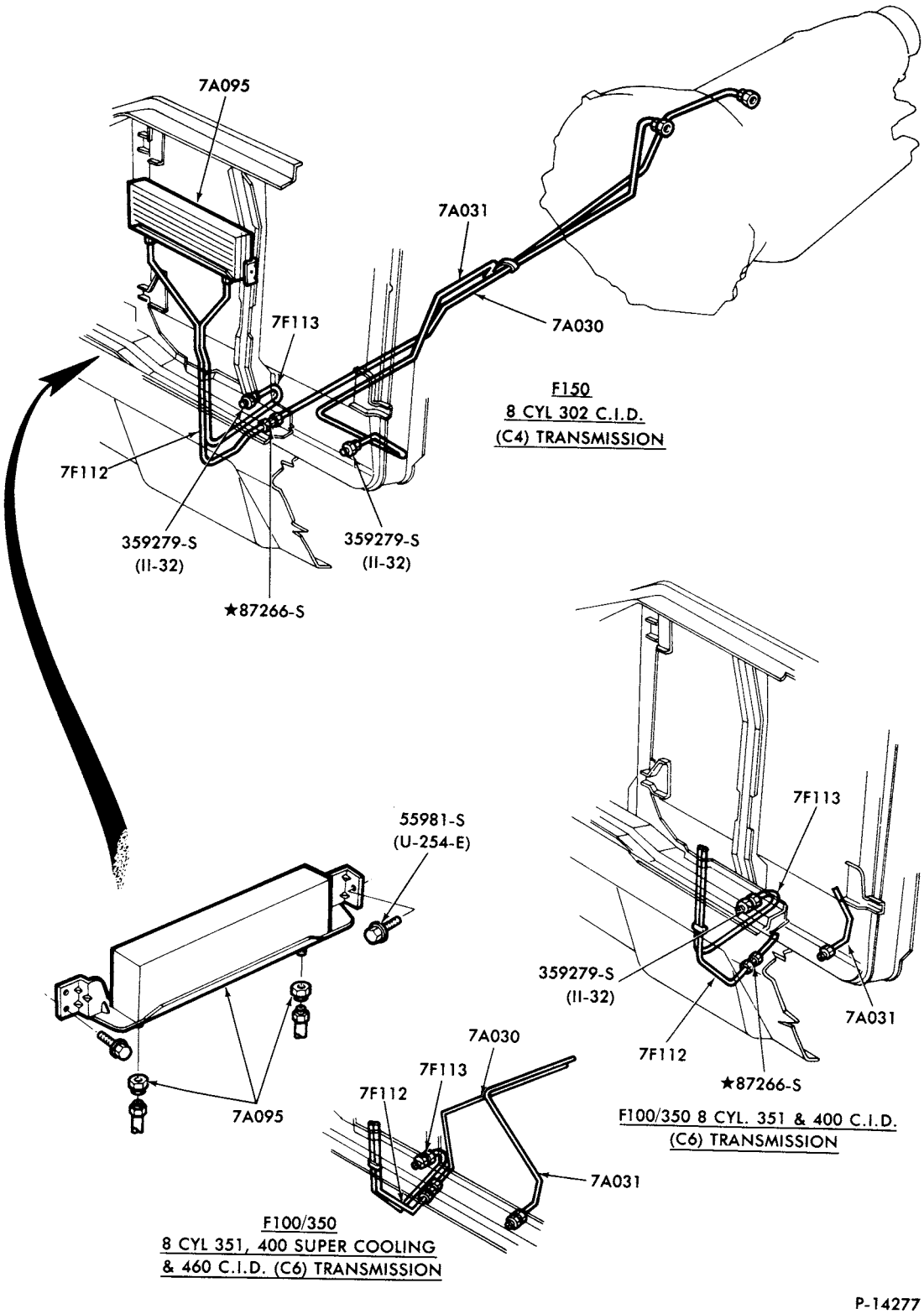

TRANSMISSION OIL COOLING SYSTEM
1978/ F100/350--8 CYL.

COPYRIGHT © 1979 FORD MOTOR COMPANY FORD MOTOR—DEARBORN, MICHIGAN

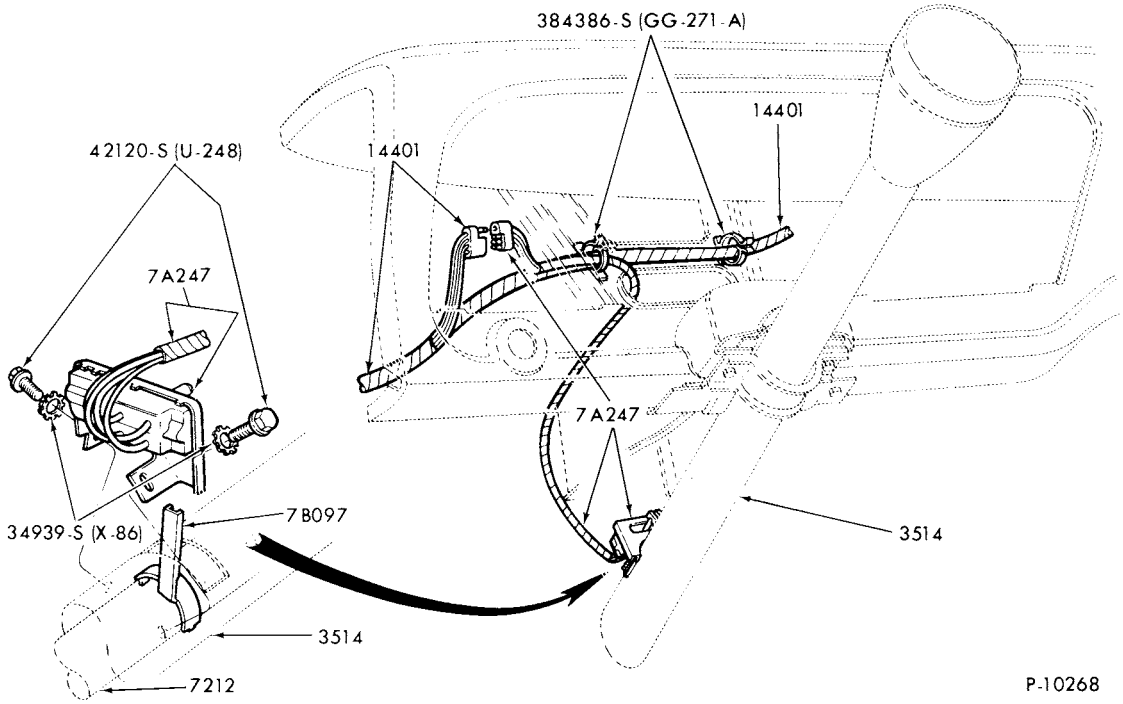

NEUTRAL SWITCH and WIRING
1973/ F100/350, M450/500

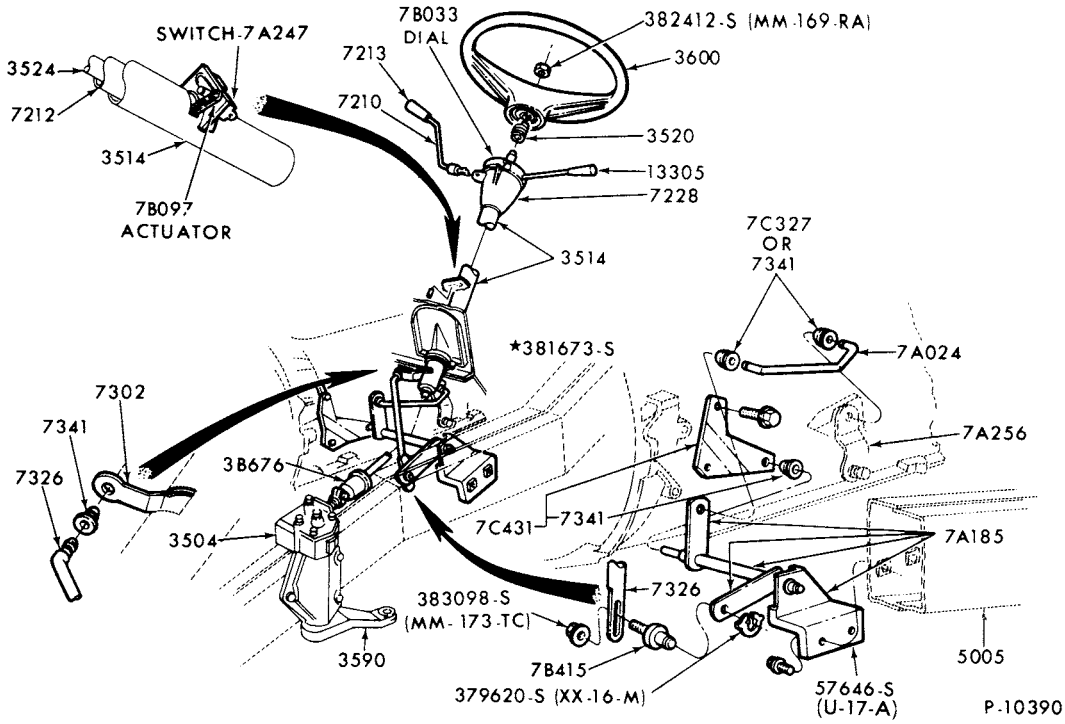

GEARSHIFT CONTROLS (C6 TRANSMISSION)
1973/76 F100/150--4/W/D
1977 F150/250--4/W/D

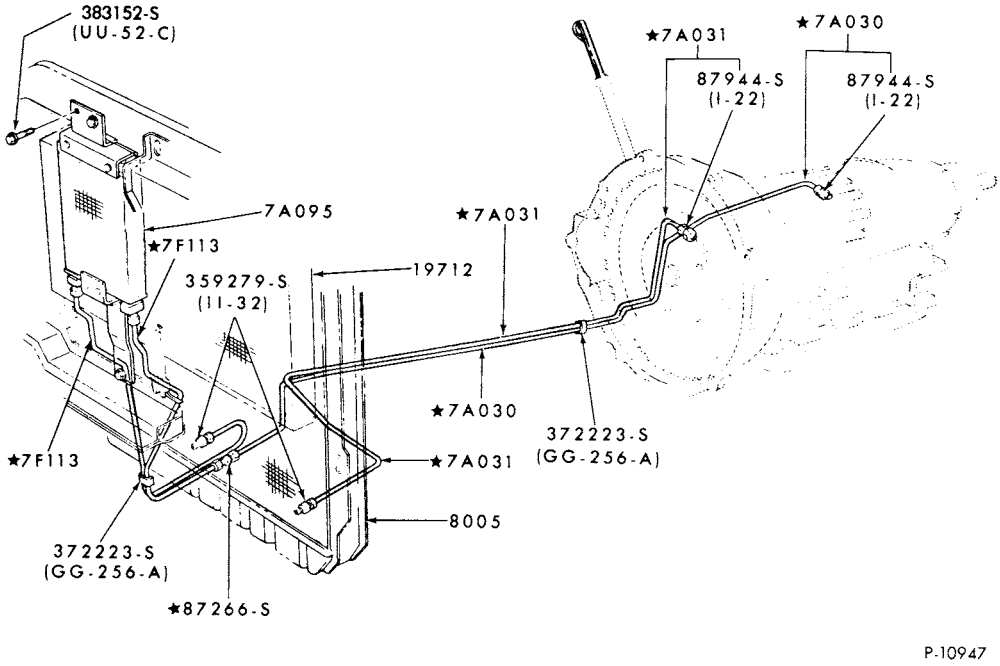

TRANSMISSION OIL COOLING SYSTEM (C6 TRANSMISSION)
1974/ F100/350

COPYRIGHT © 1980 - FORD MOTOR COMPANY - DEARBORN, MICHIGAN

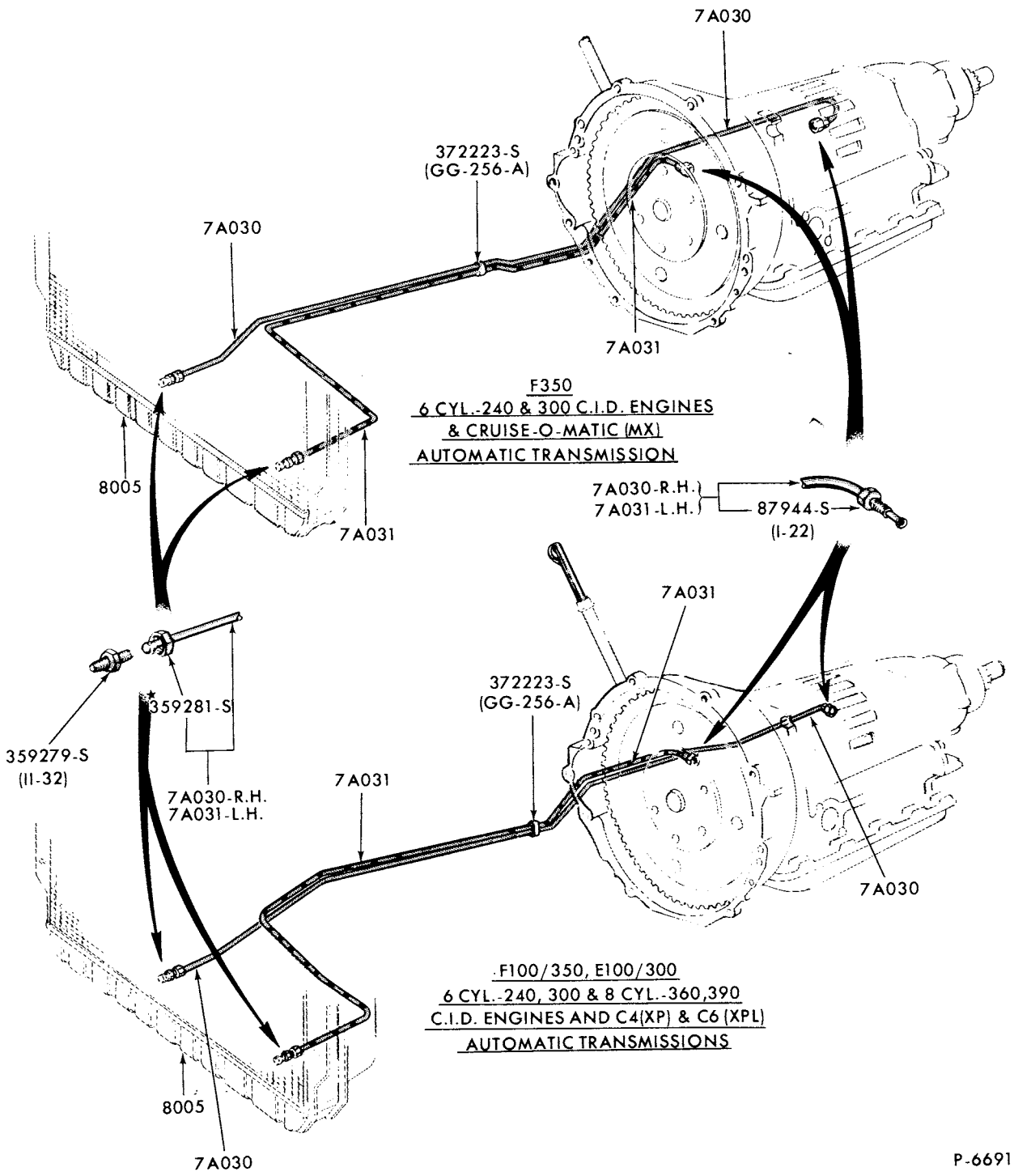

TRANSMISSION OIL COOLING SYSTEM (C6 TRANSMISSION)-TYPICAL
1973 F100/350

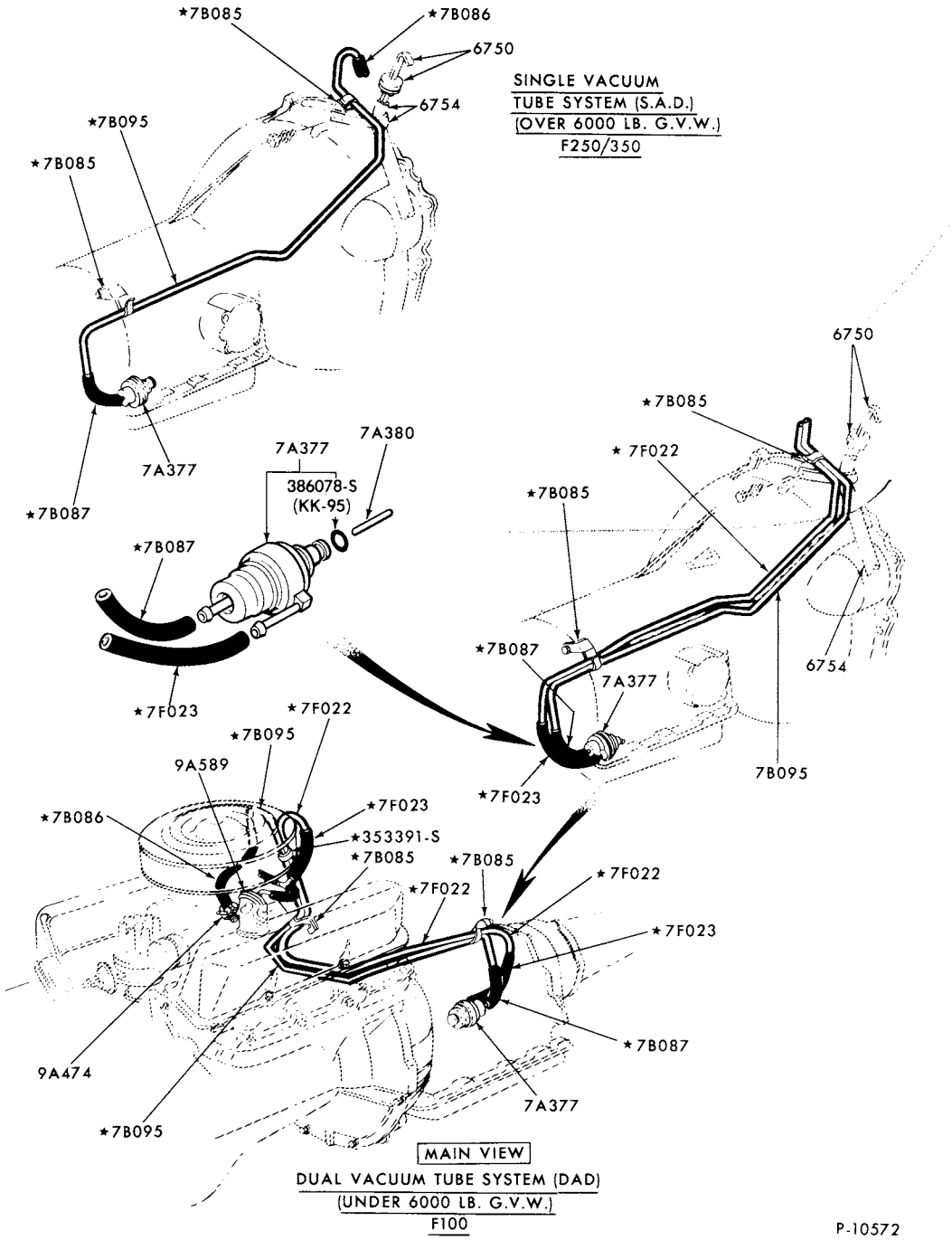

VACUUM TUBE INSTALLATION (C6 TRANSMISSION)
1973/ F100/350--2/W/D and F250/350--4/W/D

COPYRIGHT © 1979 FORD MOTOR COMPANY DEARBORN, MICHIGAN

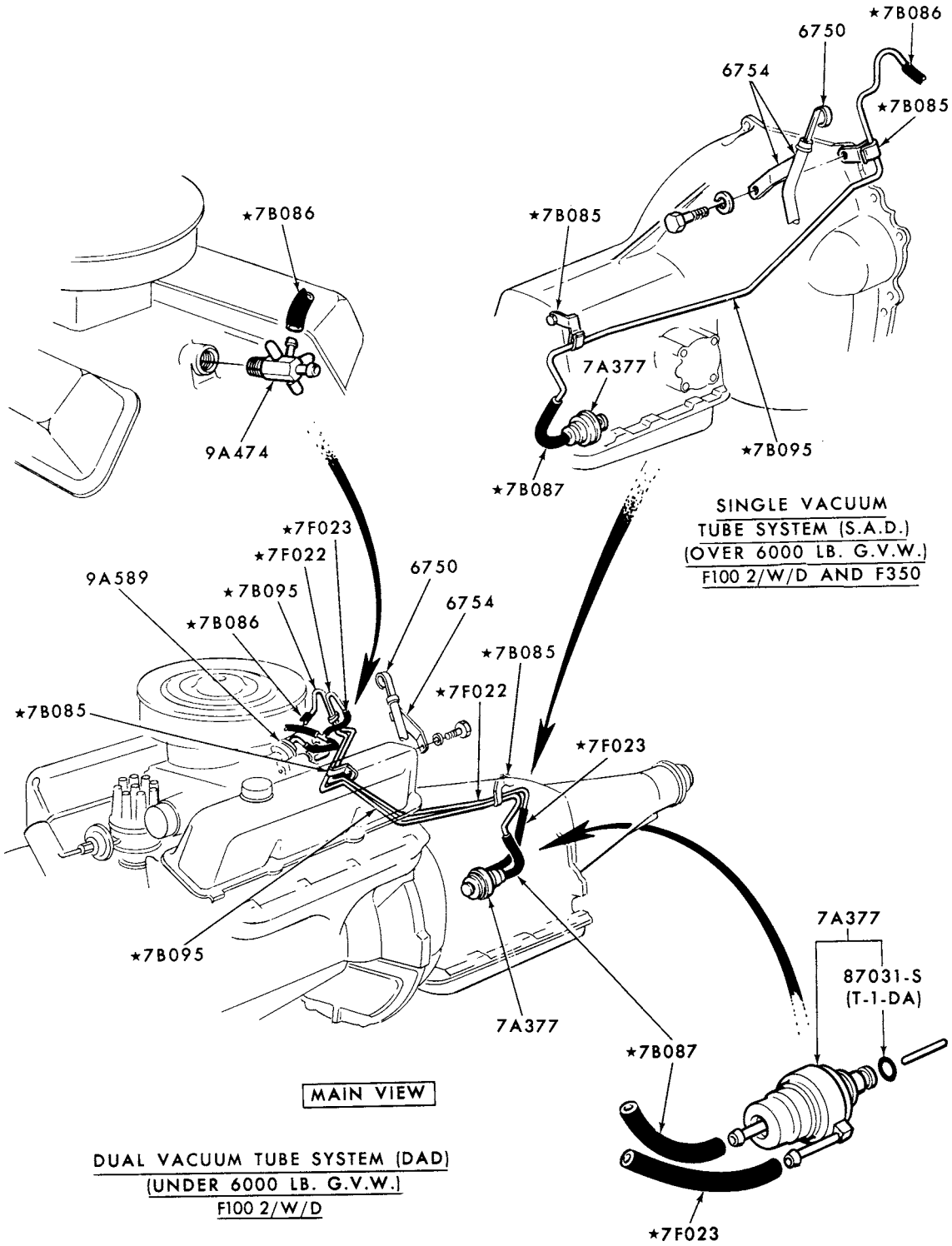

P-10573

VACUUM TUBE INSTALLATION (C6 TRANSMISSION)
1973/ F100/350--8 CYL. 460

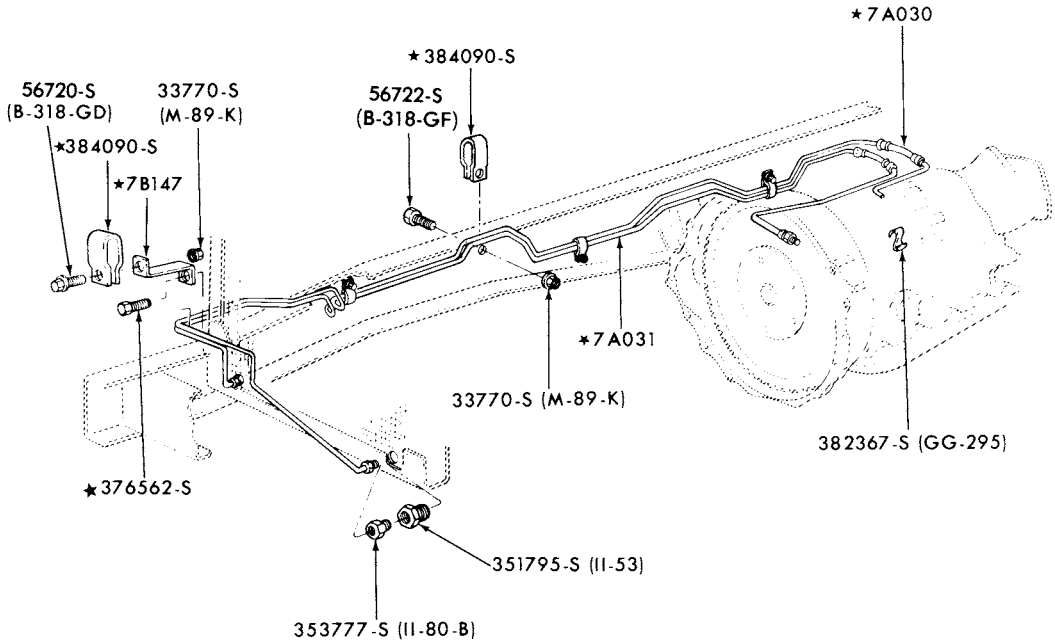

TRANSMISSION OIL COOLING SYSTEM (C6 TRANSMISSION)
1974/76 M450/500

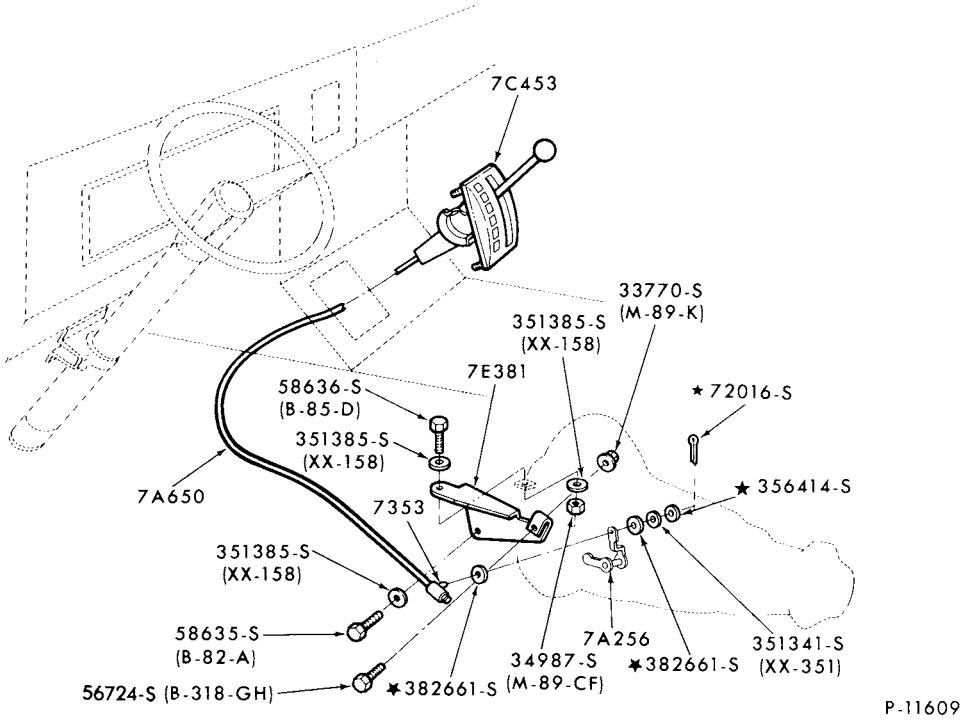

GEARSHIFT MECHANISM (SHELF MOUNTED)
1973/76 M450/500

COPYRIGHT © 1979 FORD MOTOR COMPANY - DEARBORN, MICHIGAN

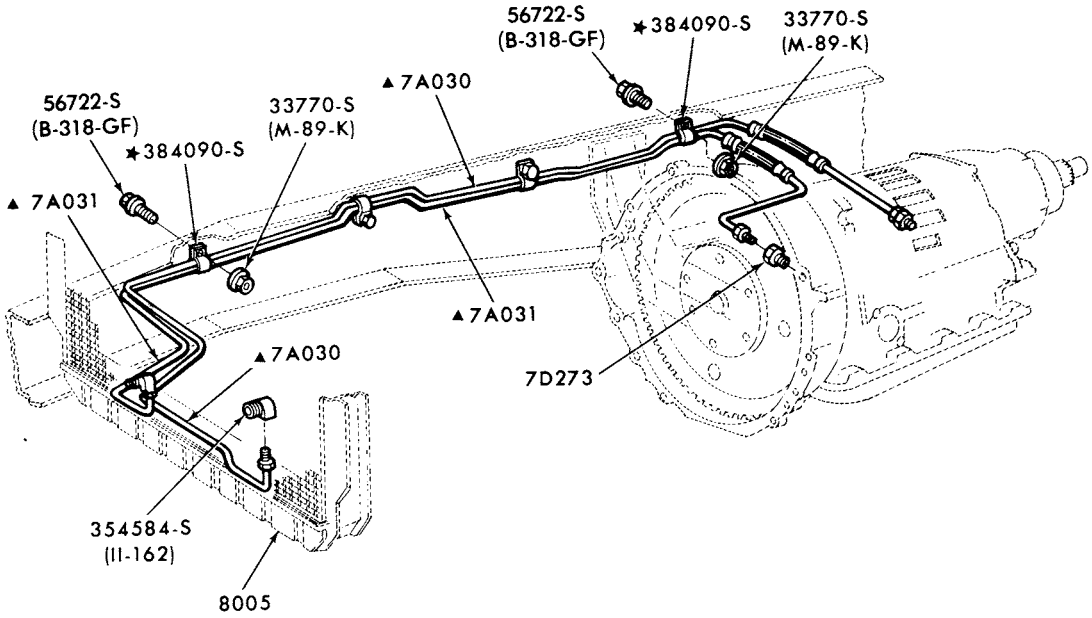

▲ IMPROVISE FROM BULK TUBING B7Q-2269-A AND 87945-S8(I-23) NUT

P-11407

OIL COOLING SYSTEM (C6 TRANSMISSION)

1973/76 M450/500

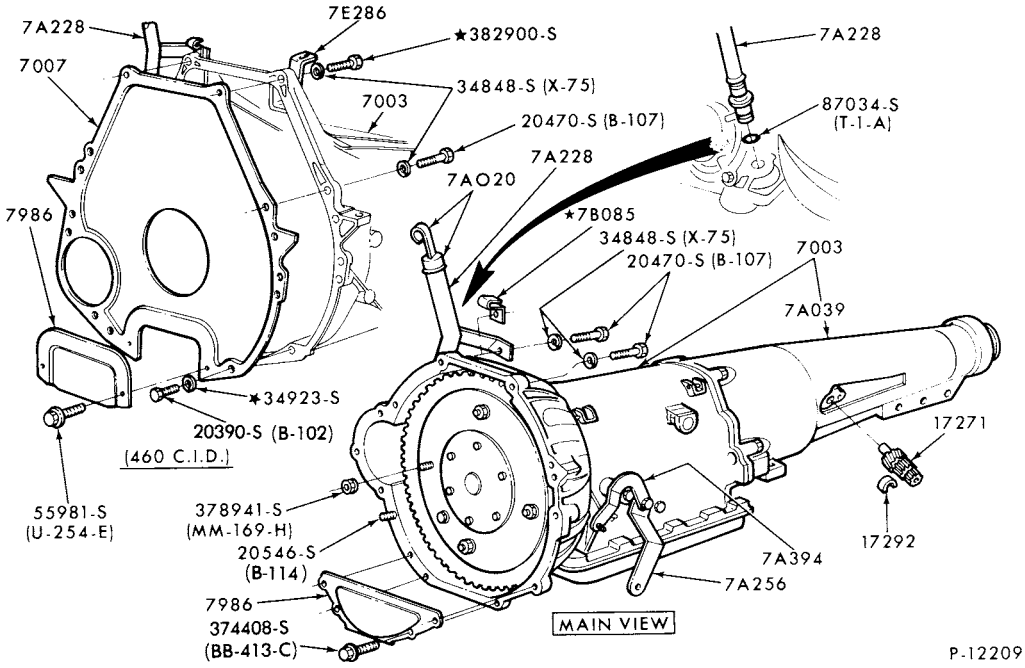

TRANSMISSION INSTALLATION
1973/76 F100/350--8 CYL. 351, 360, 390, 400 and 460

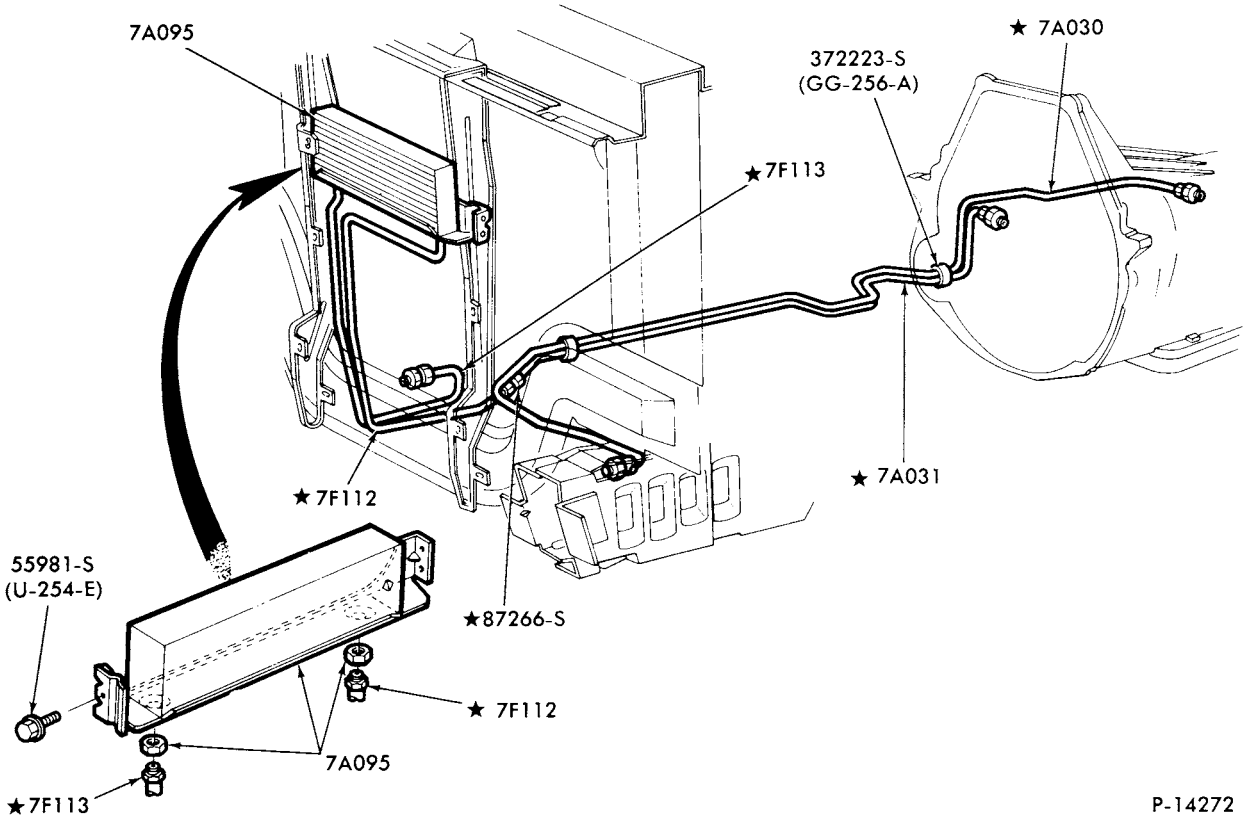

TRANSMISSION OIL COOLING SYSTEM
1977/ E100/350--8 CYL.

COPYRIGHT © 1979 FORD MOTOR COMPANY DEARBORN, MICHIGAN

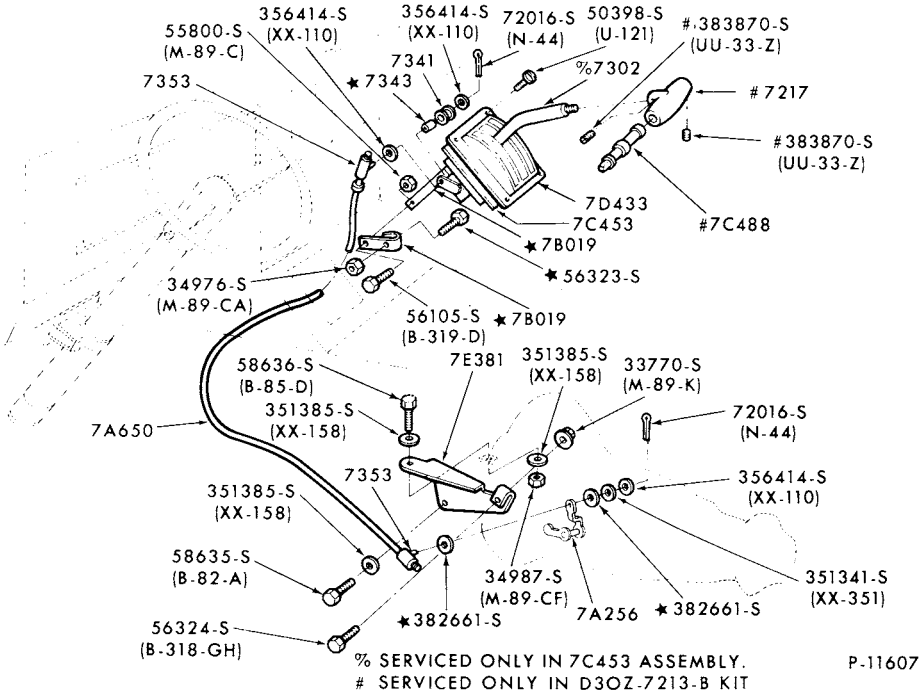

GEARSHIFT MECHANISM (DASH and SHELF MOUNTED)
1973/76 M450/500

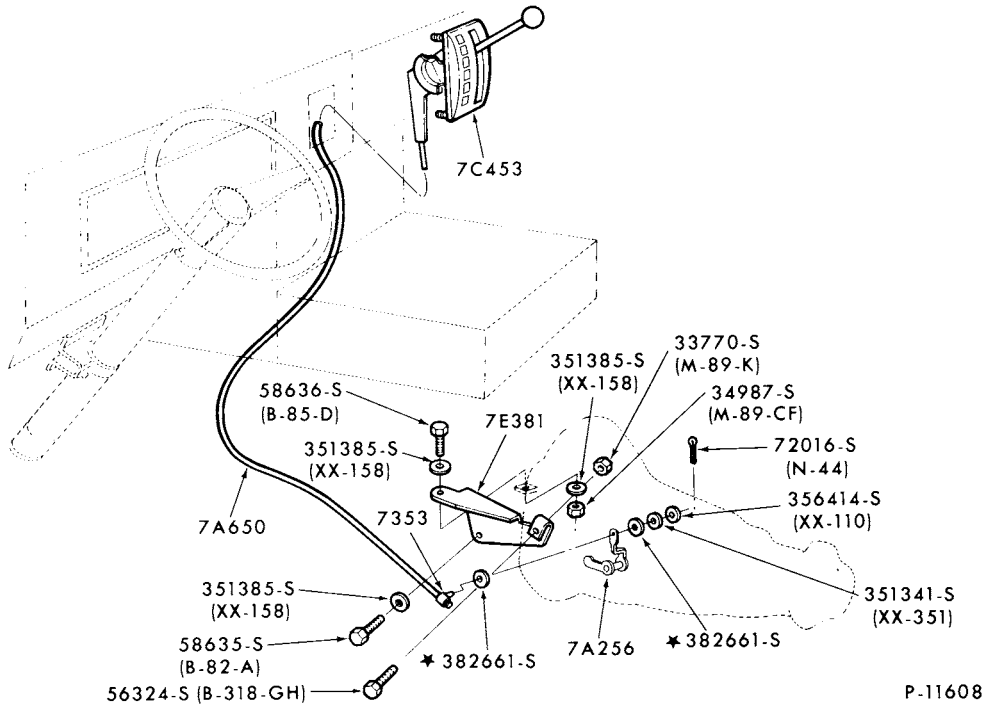

GEARSHIFT MECHANISM (DASH MOUNTED)
1973/76 M450/500

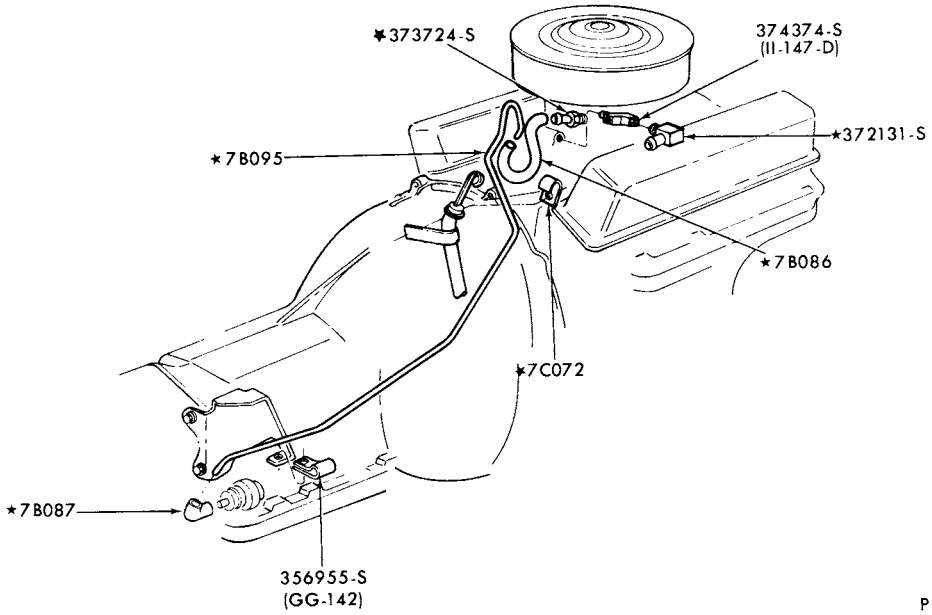

VACUUM TUBE INSTALLATION (C6 TRANSMISSION)
1973/76 M450/500--8 CYL. 360, 390

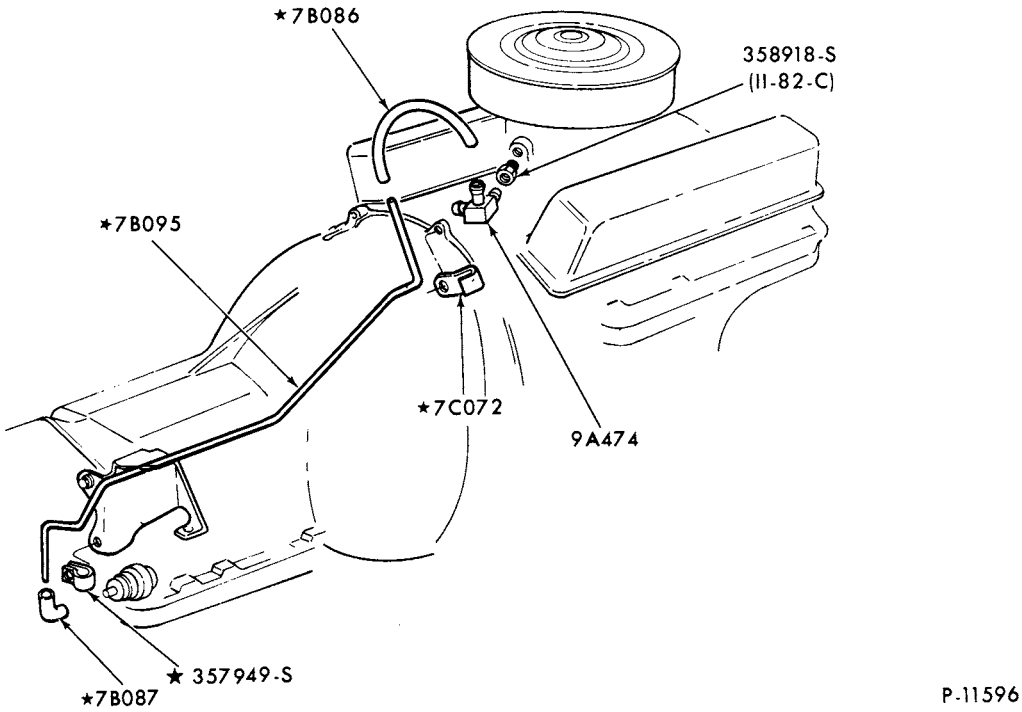

VACUUM TUBE INSTALLATION (C6 TRANSMISSION)
1973/76 M450/500 8 CYL. 460

COPYRIGHT © 1979 FORD MOTOR COMPANY, DEARBORN, MICHIGAN

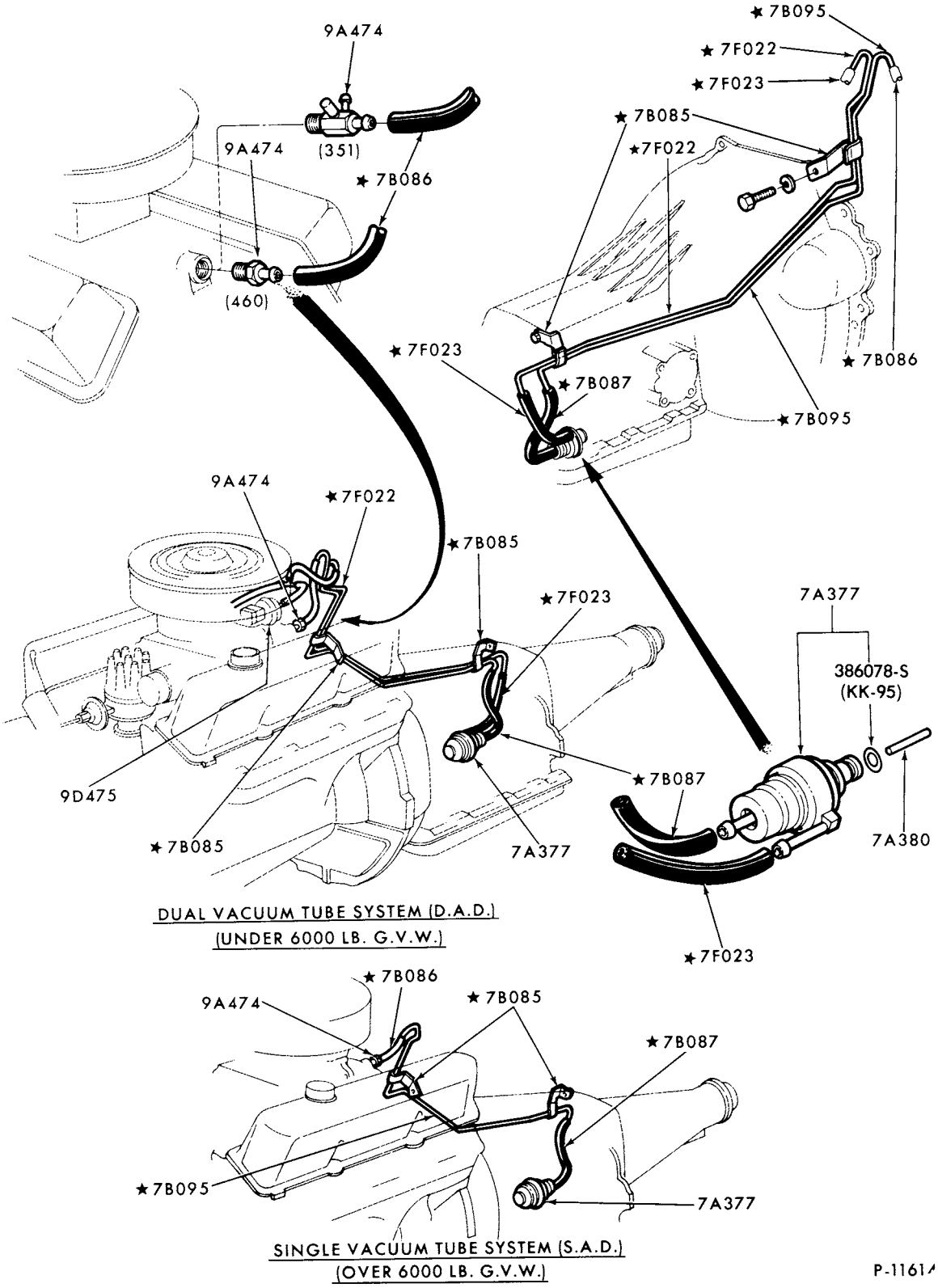

VACUUM TUBE INSTALLATION (C6 TRANSMISSION)
1975/ E100/350--8 CYL. 351, 460

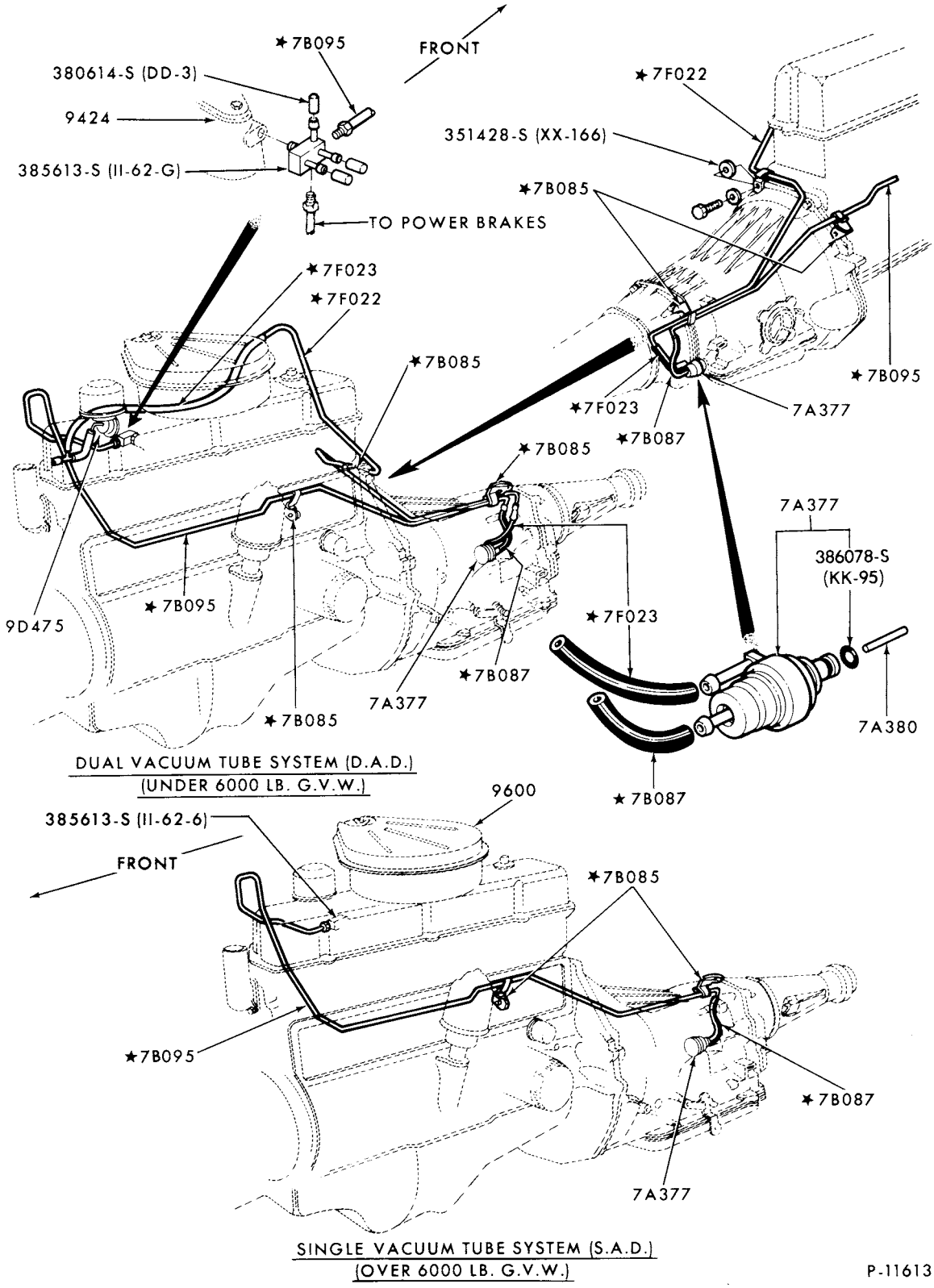

VACUUM TUBE INSTALLATION (C6 TRANSMISSION)
1975/ E100/350--6 CYL. 300

COPYRIGHT © 1979 FORD MOTOR COMPANY · DEARBORN, MICHIGAN

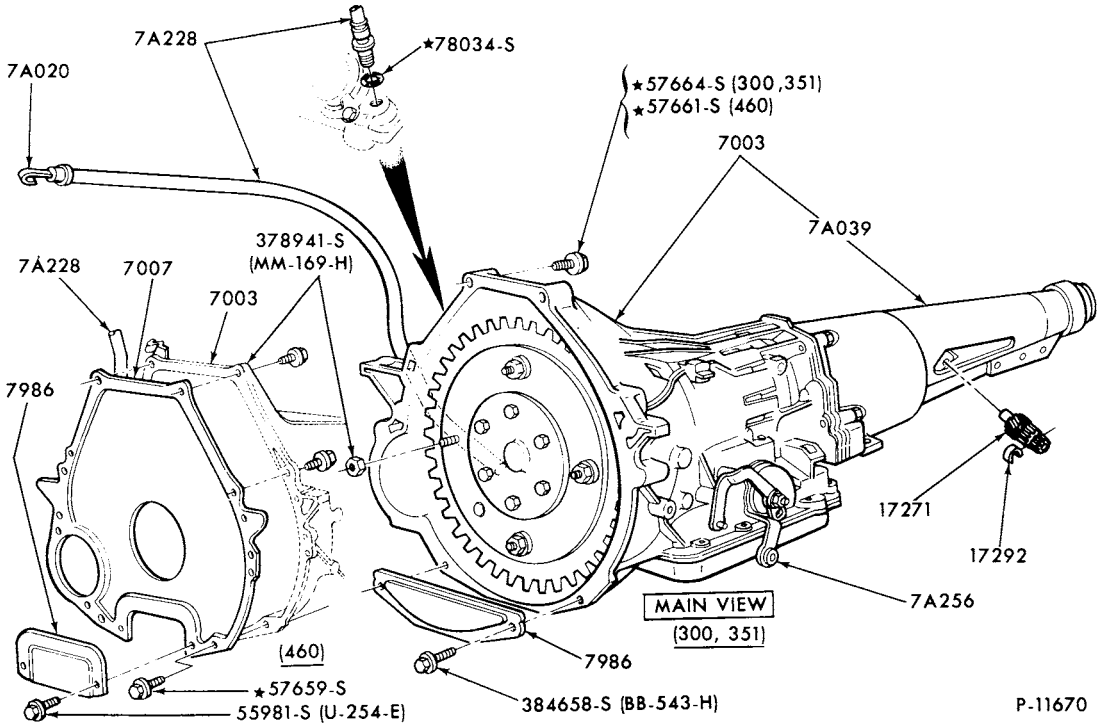

AUTOMATIC TRANSMISSION INSTALLATION (C6 TRANSMISSION)
1975/ E100/350

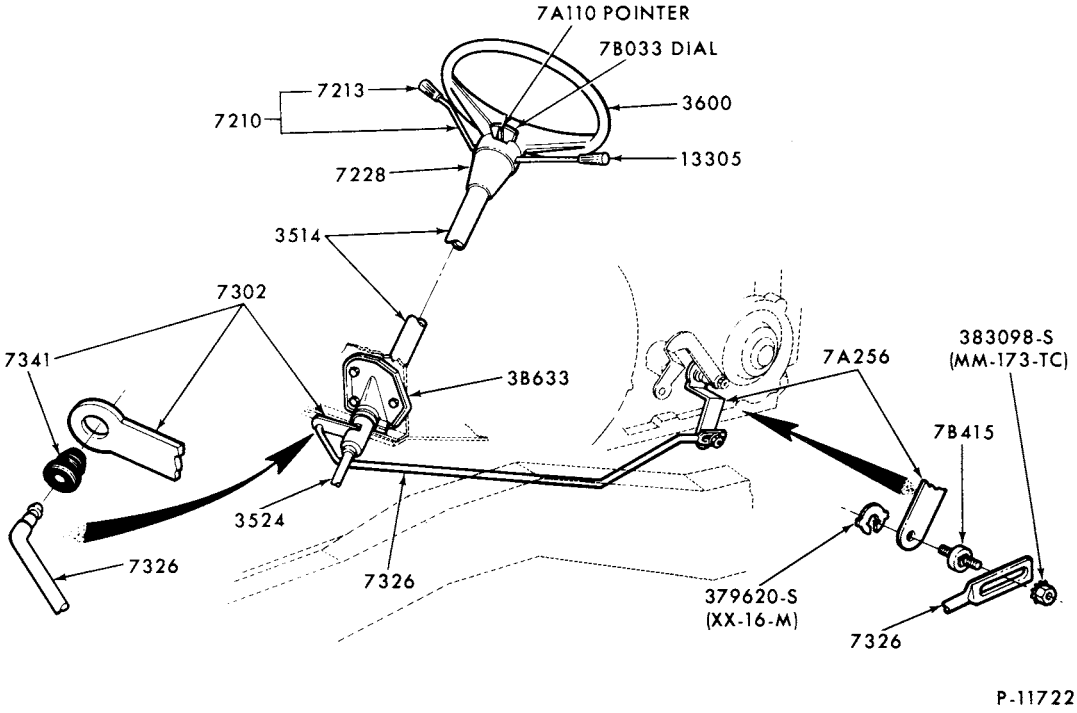

GEARSHIFT CONTROLS (C4-C6 TRANSMISSION)
1975/ E100/350

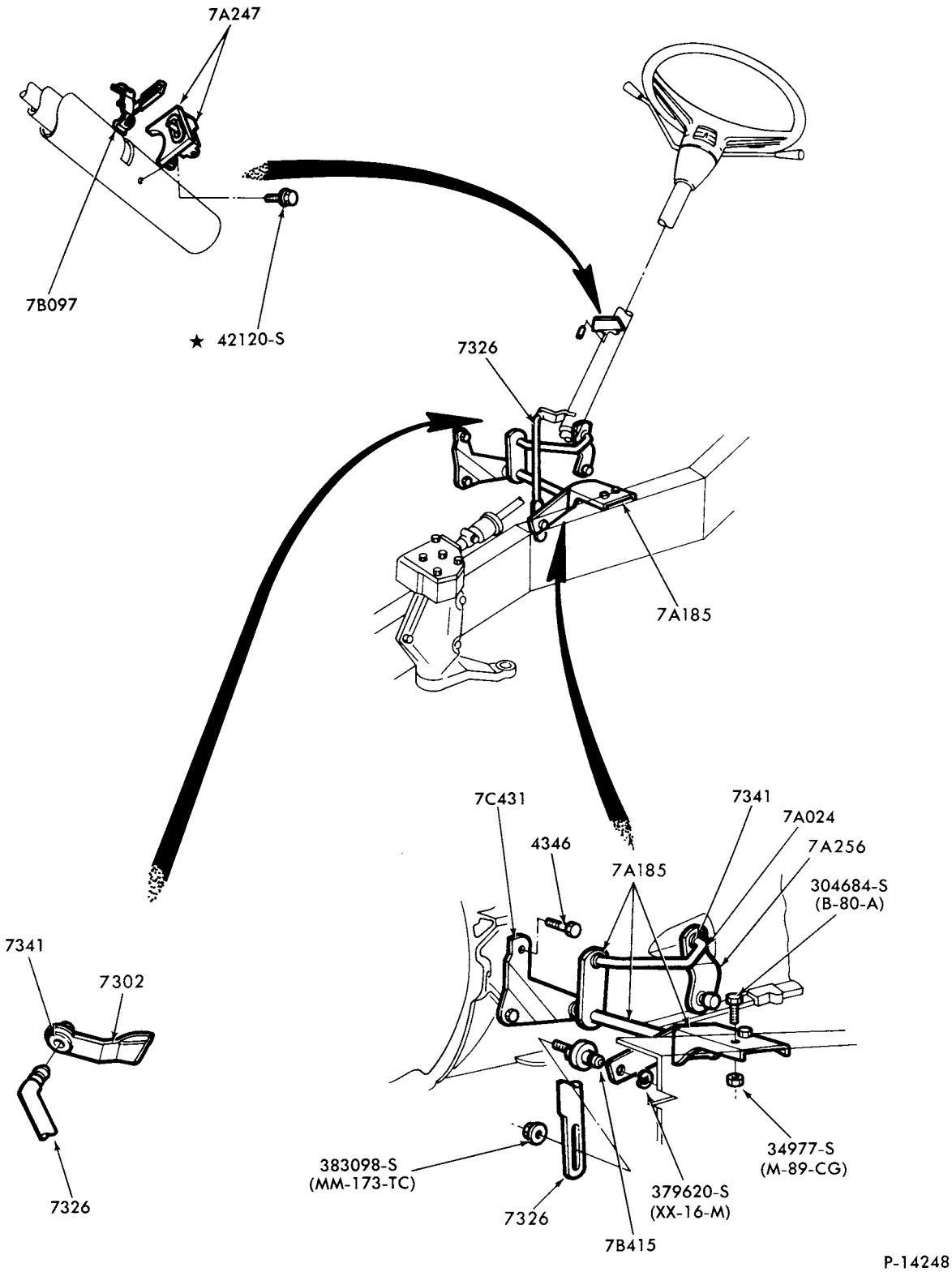

GEARSHIFT CONTROLS (C6 TRANSMISSION)
1978/ F150/250--4/W/D

COPYRIGHT © 1979 FORD MOTOR COMPANY, DEARBORN, MICHIGAN

INDEX

INCLUDED IN THIS INDEX ARE THE FOLLOWING MAJOR GROUPS IN THE ORDER SHOWN BELOW

COOLANT RECOVERY SYSTEM and RELATED PARTS
COOLING SYSTEMS
RADIATOR GRILLE and RELATED PARTS
WATER PUMPS

YEAR 19....	TITLE	MODEL	SECTION	PAGE	ILLUS. NO.
	B SERIES				
	COOLING SYSTEMS				
73/77	6 cyl. 300	B500	80	3	P-5230
73/77	8 cyl. 330	B500	80	5	P-4915
74/77	Water by-pass and connections--8 cyl. 330	B500	80	7	P-11594
	RADIATOR GRILLE and RELATED PARTS				
73/77	Grille	B500	82	1	P-10217
73/77	Grille guard	B500	82	3	P-10074
	WATER PUMPS				
73/77	6 cyl. 300 L/D	B500	82	4	P-4731
73/77	8 cyl. 330 M/D	B500	82	4	P-9198
	E SERIES				
	COOLING SYSTEMS				
73/	6 cyl. 240, 300 and 8 cyl. 302, 351 and 460	E100/350	80	4	P-6377
	COOLANT RECOVERY SYSTEM and RELATED PARTS				
73/74	6 cyl. 240	E100/300	80	1	P-8568
	RADIATOR GRILLE and RELATED PARTS				
73/74	Grille	E100/300	160	4	P-6329
75/78	Grille	E100/350	82	6	P-12024
79	Grille	E100/350	82	8	P-14827
	WATER PUMPS				
73/	6 cyl. 240 and 300	All	82	4	P-4731
73/	8 cyl. 302 and 351W	All	82	5	P-5143
75/	8 cyl. 460	All	82	5	P-6492
	F SERIES				
	COOLING SYSTEMS				
73/	6 cyl. 240 and 300	F100/350	80	2	P-12200
73/76	8 cyl. 360 and 390	F100/350	80	5	P-4915
73/	8 cyl. 302	F100/150	80	2	P-12163
73/77	6 cyl. 300	F500	80	3	P-5230
73/77	8 cyl. 330	F500	80	5	P-4915
77/	8 cyl. 351M and 400	F100/350	80	8	P-14553
74/77	Water by-pass and connections--8 cyl. 330	F500	80	7	P-11594
	COOLANT RECOVERY SYSTEM and RELATED PARTS				
73/	6 cyl. 240 and 300	F100/250	80	1	P-8567
	RADIATOR GRILLE and RELATED PARTS				
73/77	Grille	F100/350	82	2	P-10214
73/77	Grille	F500	82	1	P-10217
78/	Grille	F100/350	82	7	P-14029
73/77	Grille guard	F500	82	3	P-10074
	WATER PUMPS				
73/	6 cyl. -240 and 300 L/D	F100/500	82	4	P-4731
73/	8 cyl. 302	F100	82	5	P-5143
73/77	8 cyl. 330 M/D	F500	82	4	P-9198
73/76	8 cyl. 360 and 390	F100/350	82	4	P-9198
73/	8 cyl. 351M, 400 and 460	F100/350	82	5	P-6492

COPYRIGHT © 1979 FORD MOTOR COMPANY —DEARBORN, MICHIGAN

INDEX

YEAR 19__	TITLE	MODEL	SECTION	PAGE	ILLUS. NO.
	M SERIES				
	Refer to "P" Series for illustrations not listed below				
	COOLING SYSTEM				
73/76	Hi Profile - 8 cyl. 360 and 390	M450/500	80	6	P-11412
74/76	Low Profile - 8 cyl. 360,390 and 460	M450/500	80	7	P-11590
	RADIATOR GRILLE and RELATED PARTS				
73/76		M450/500-provided by body builder			
	WATER PUMPS				
73/76	8 cyl. 360 and 390	M450/500	82	4	P-9198
74/76	8 cyl. 460	M450/500	82	5	P-6492
	P SERIES				
	COOLING SYSTEM				
73/76	6 cyl. 300	P350/500	80	6	P-9874
	RADIATOR GRILLE and RELATED PARTS				
73/77		P350/500-provided by body builder			
	WATER PUMPS				
73/77	6 cyl. 300 L/D	P350/500	82	4	P-4731

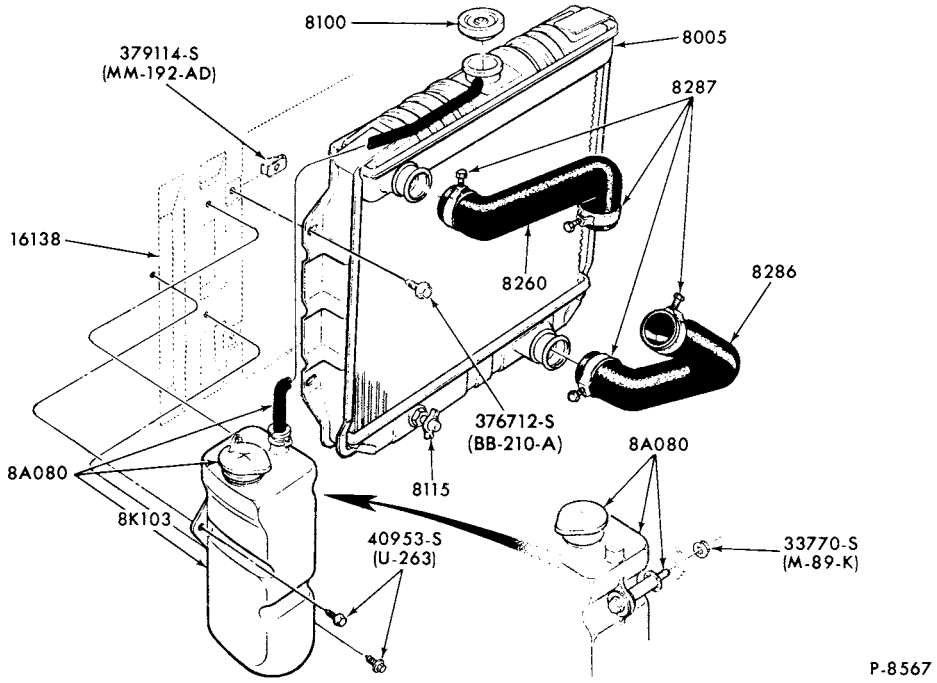

COOLANT RECOVERY SYSTEM and RELATED PARTS
1973/ F100/250--6 CYL. 240 and 300

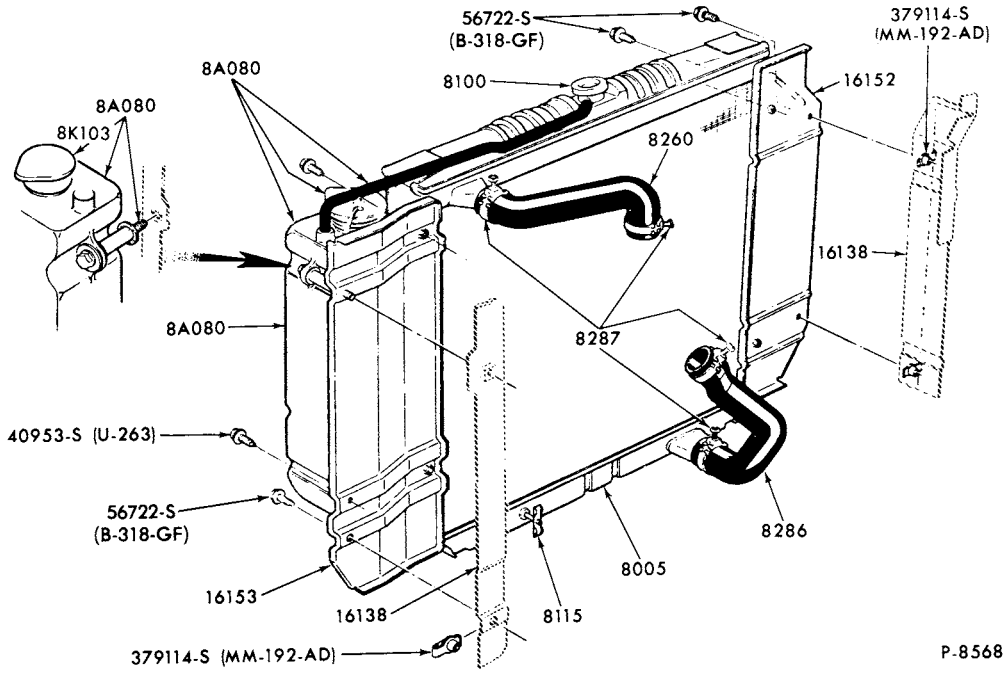

COOLANT RECOVERY SYSTEM and RELATED PARTS
1973/74 E100/300--6 CYL. 240

COPYRIGHT © 1979 — FORD MOTOR COMPANY — DEARBORN, MICHIGAN

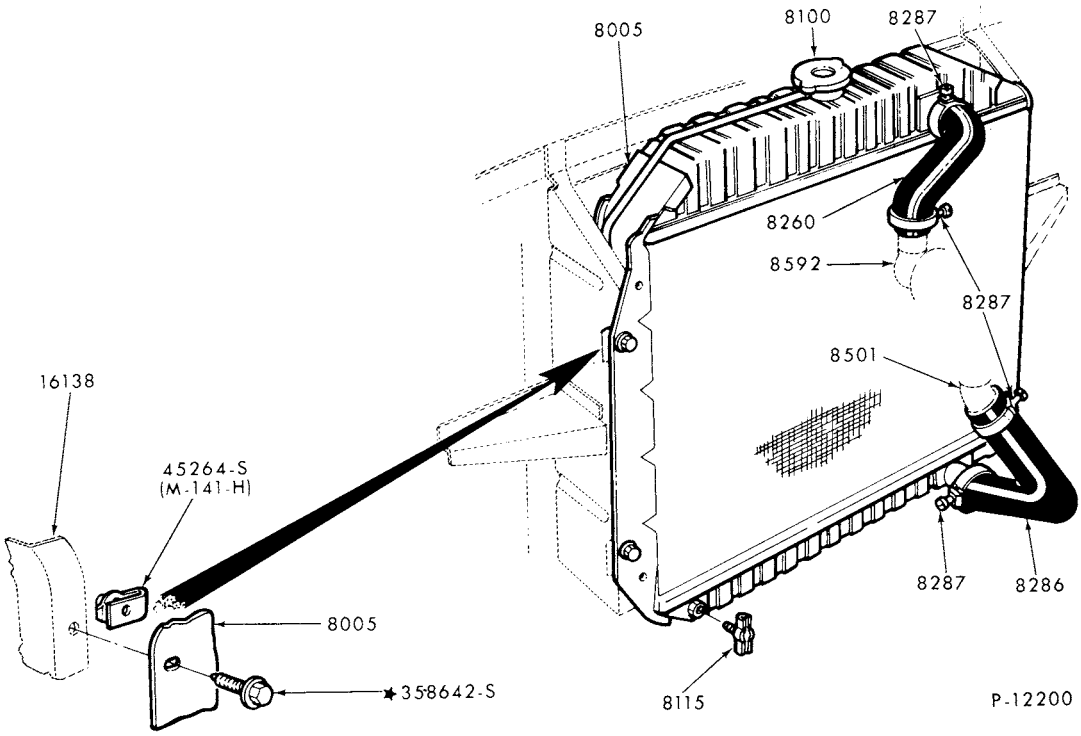

COOLING SYSTEM and RELATED PARTS-TYPICAL
1973/ F100/350--6 CYL. 240, 300

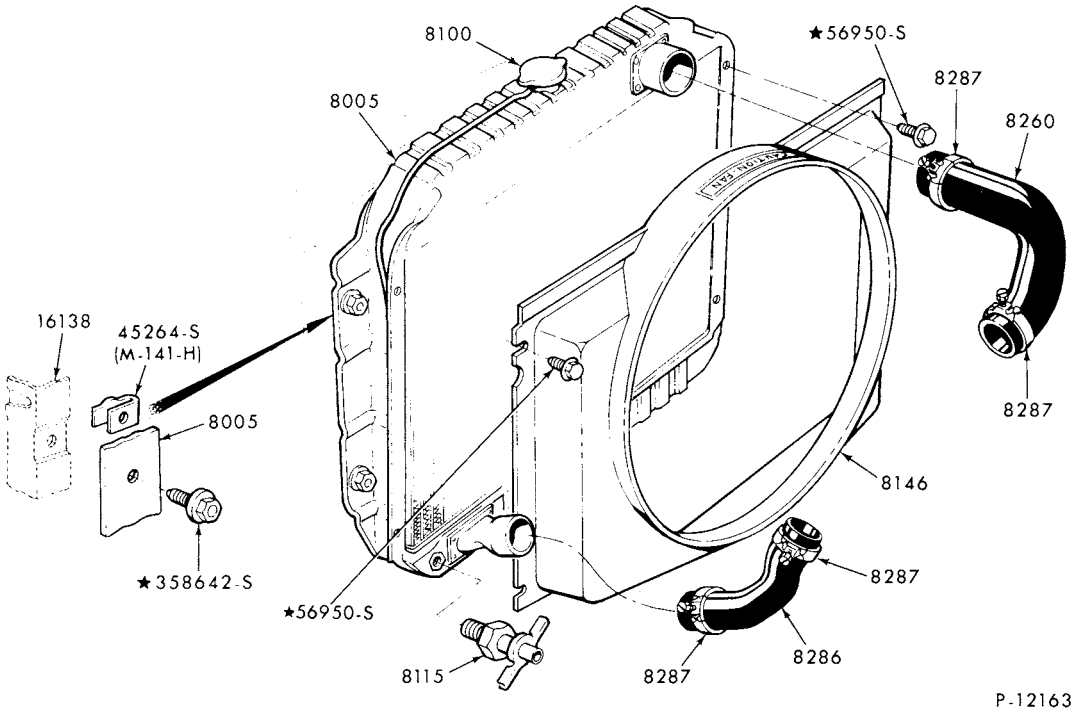

COOLING SYSTEM and RELATED PARTS - TYPICAL
1973/ F100/150--8 CYL. 302

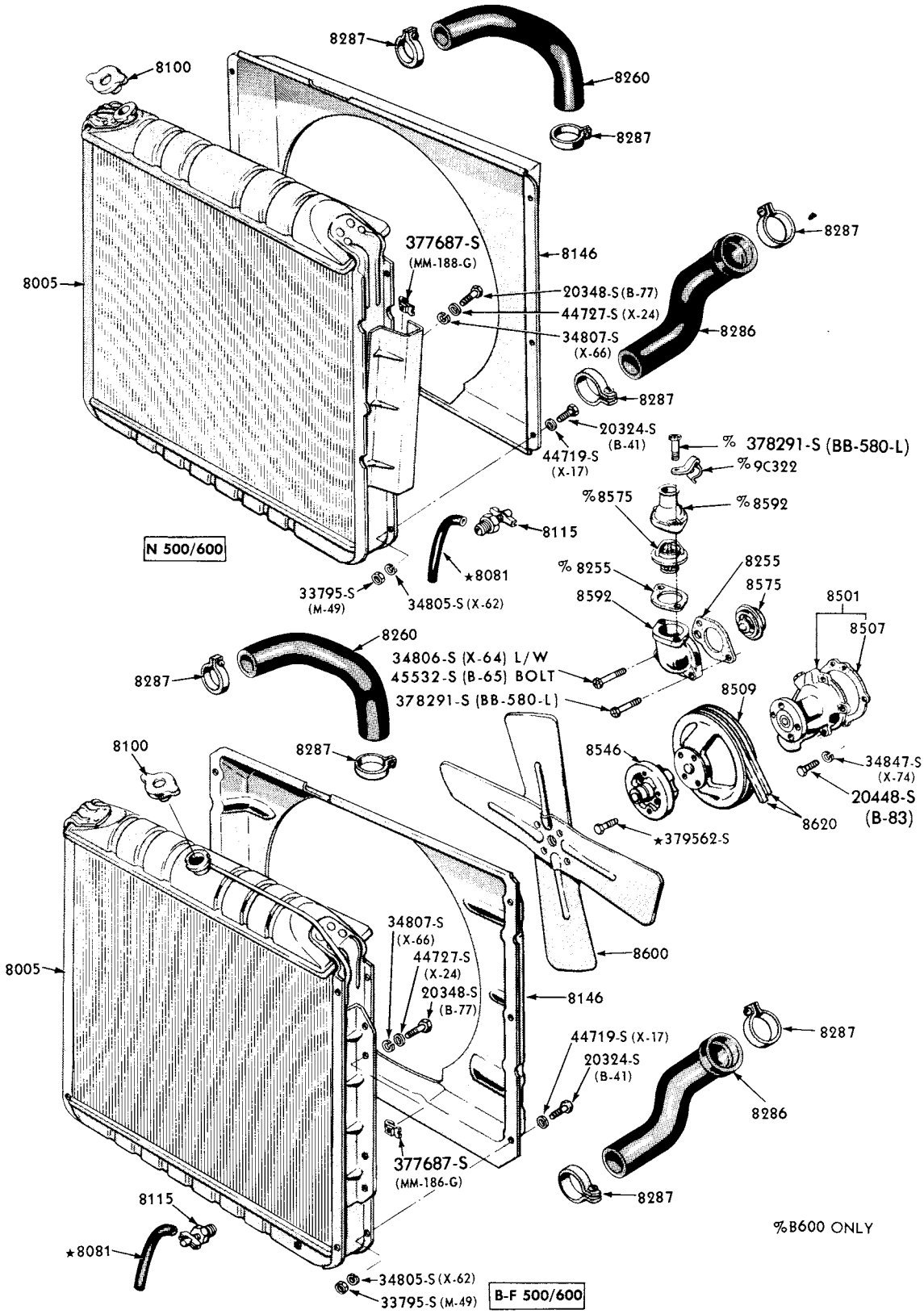

COOLING SYSTEM and RELATED PARTS-TYPICAL
1973/77 B-F500--6 CYL. 300

COPYRIGHT © 1979 — FORD MOTOR COMPANY, DEARBORN, MICHIGAN

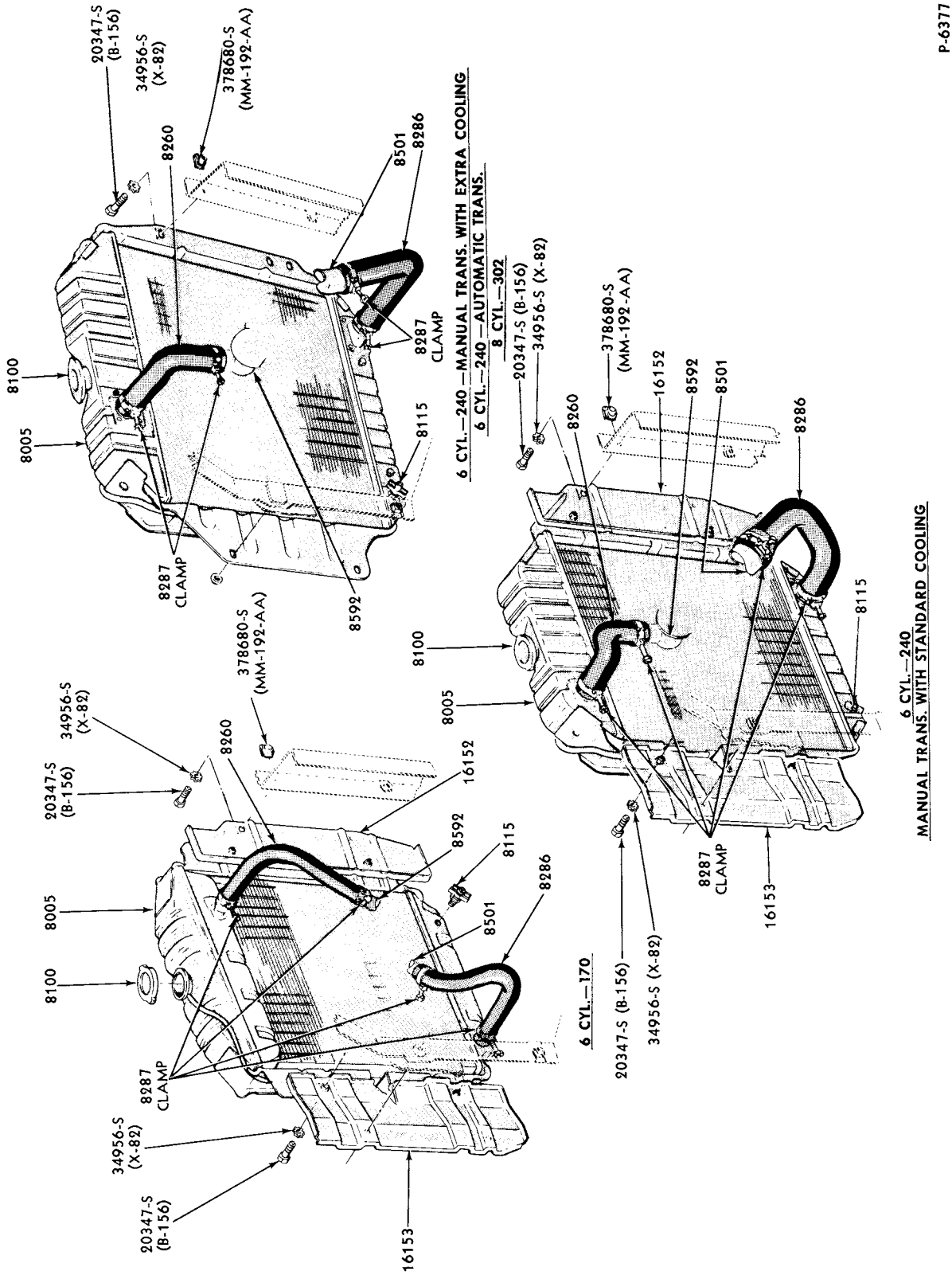

COOLING SYSTEM and RELATED PARTS-TYPICAL
1973/ E100/350--6 CYL. 240, 300 and 8 CYL. 302

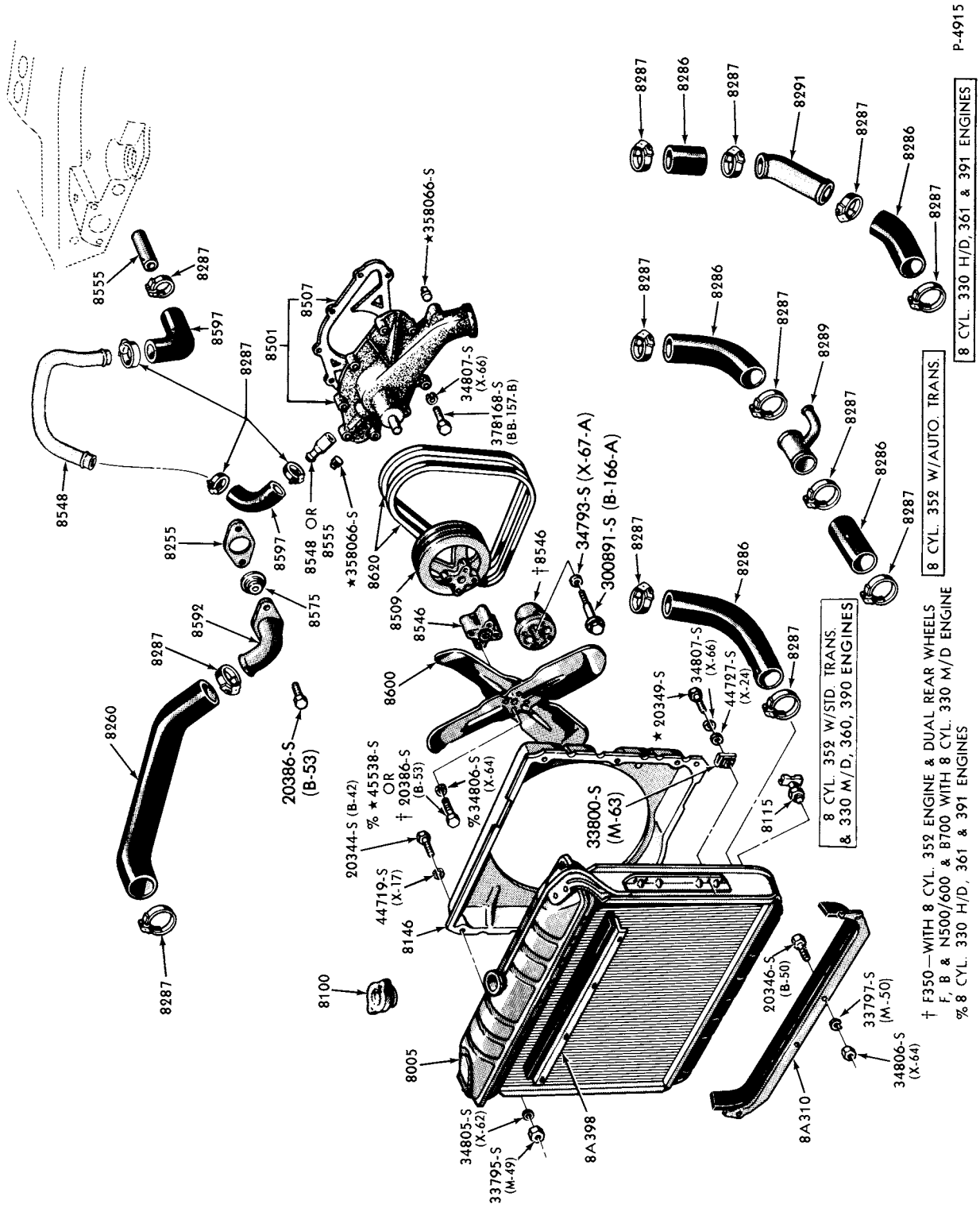

COOLING SYSTEM and RELATED PARTS-TYPICAL
1973/77 F100/350--8 CYL.330,360,390 and 1973/77 B-F500--8 CYL. 330

COPYRIGHT © 1979 FORD MOTOR COMPANY DEARBORN, MICHIGAN

1973/79 TRUCK SERIES 100/500

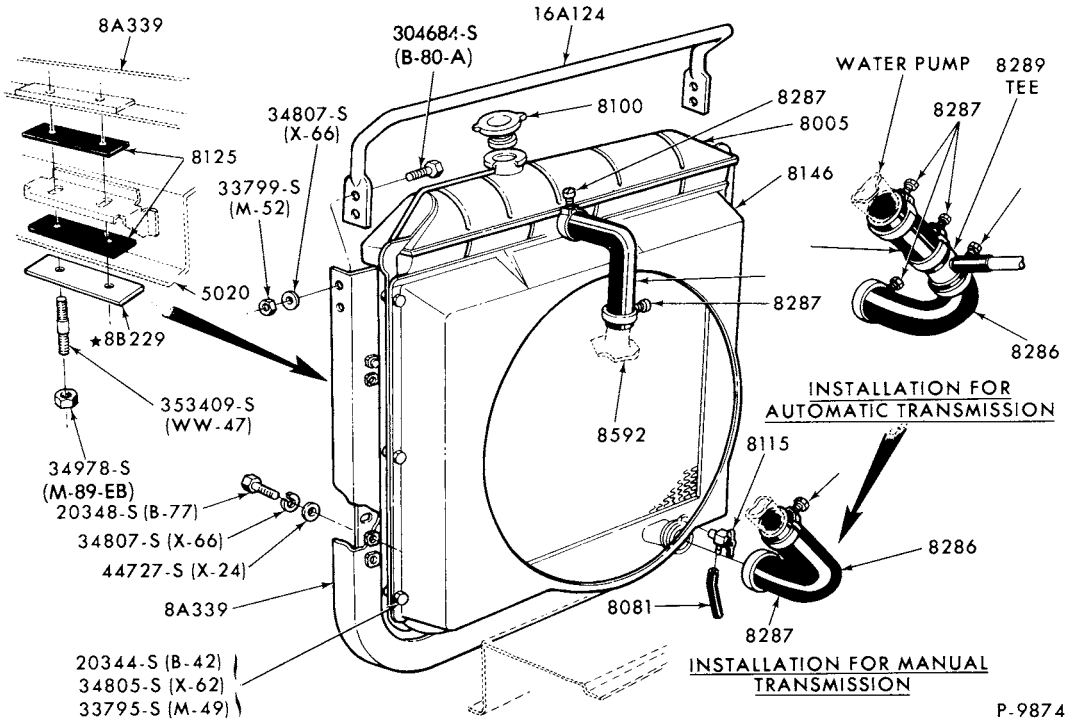

COOLING SYSTEM and RELATED PARTS
1973/77 P350/400 and 1976/ P500--6 CYL. 300

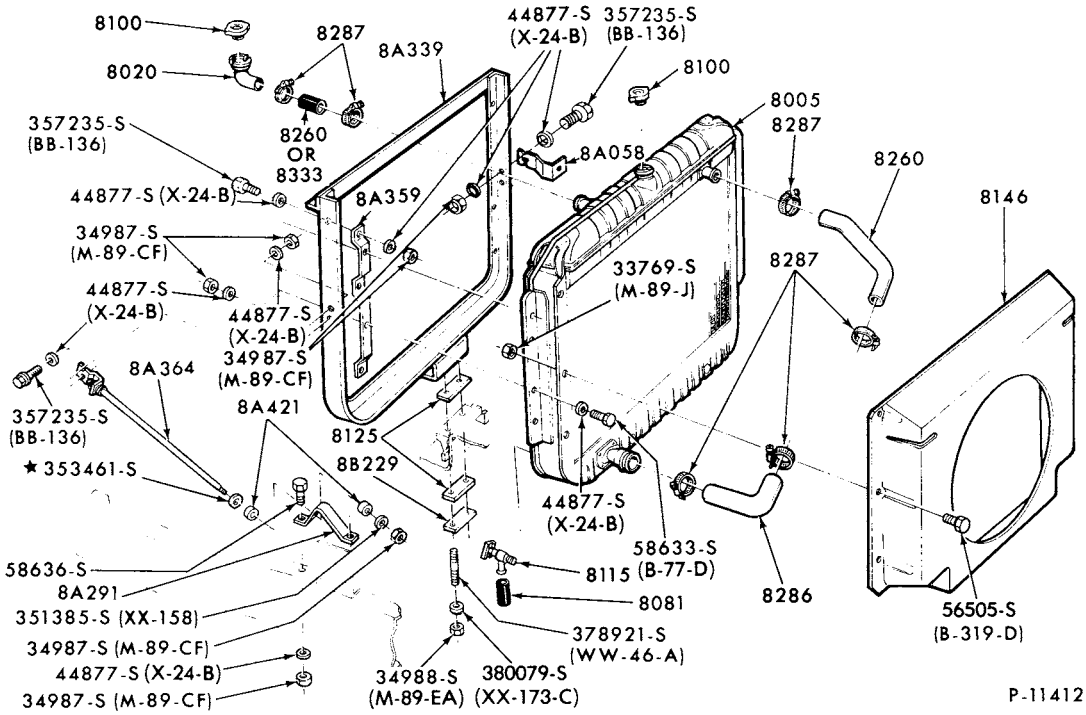

COOLING SYSTEM and RELATED PARTS - HI PROFILE
1973/76 M450/500--8 CYL. 360 and 390

1973/79
TRUCK SERIES 100/500

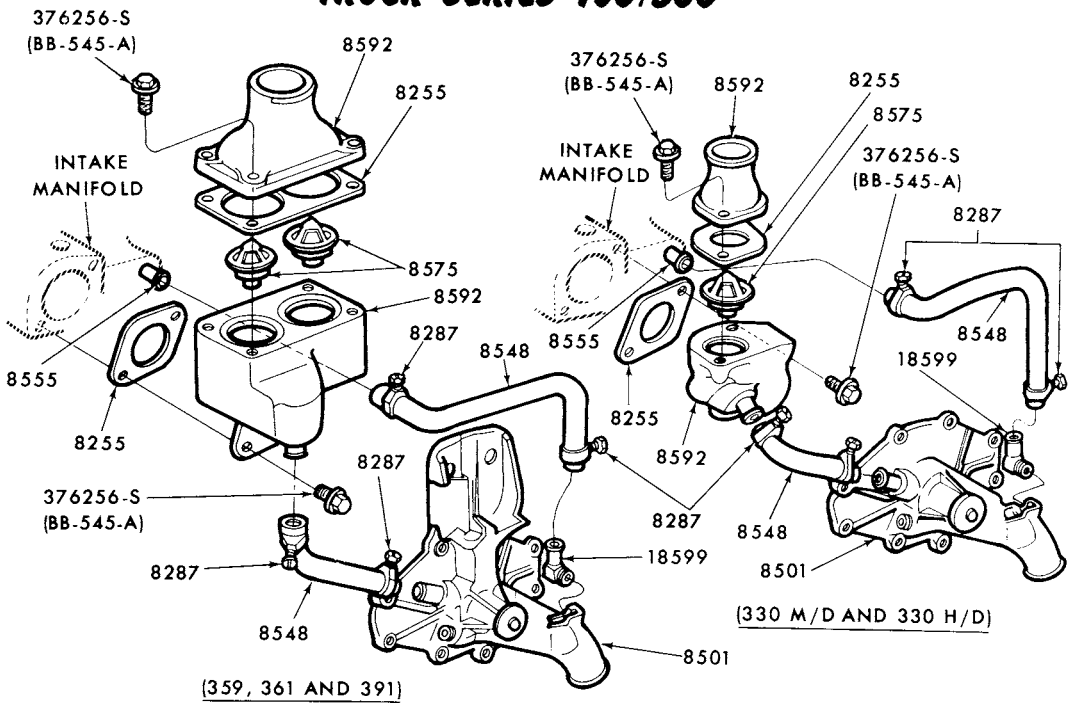

WATER BY-PASS and CONNECTIONS
1974/77 8 CYL. 330

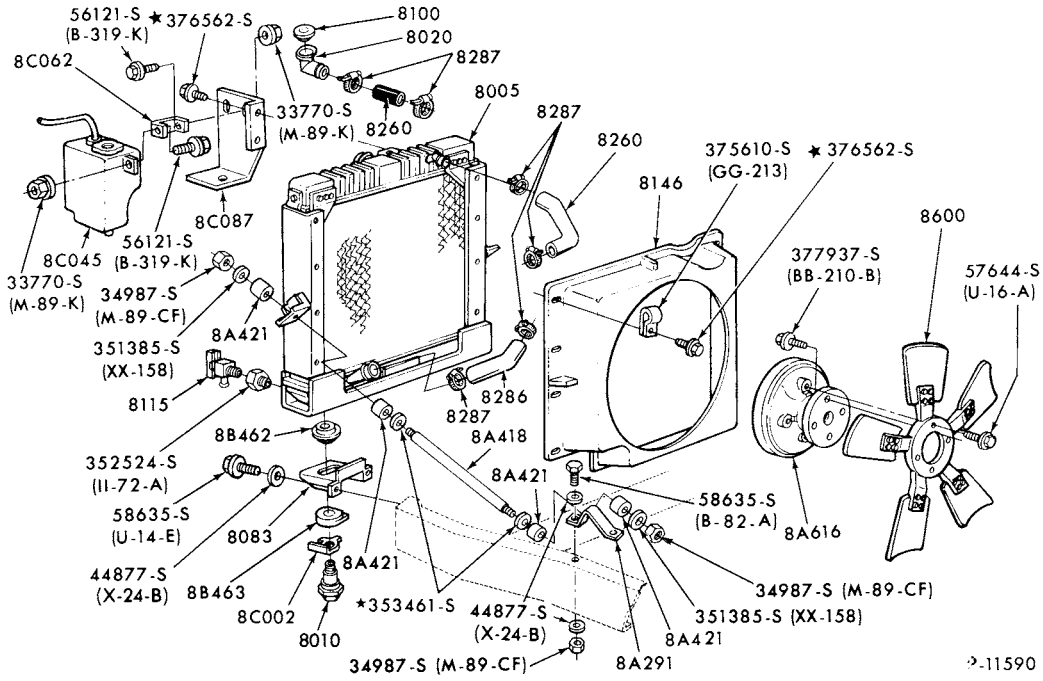

COOLING SYSTEM and RELATED PARTS-LOW PROFILE
1974/76 M450/500--8 CYL. 360,390 and 460

COPYRIGHT © 1979 FORD MOTOR COMPANY DEARBORN, MICHIGAN

1973/79 TRUCK SERIES 100/500

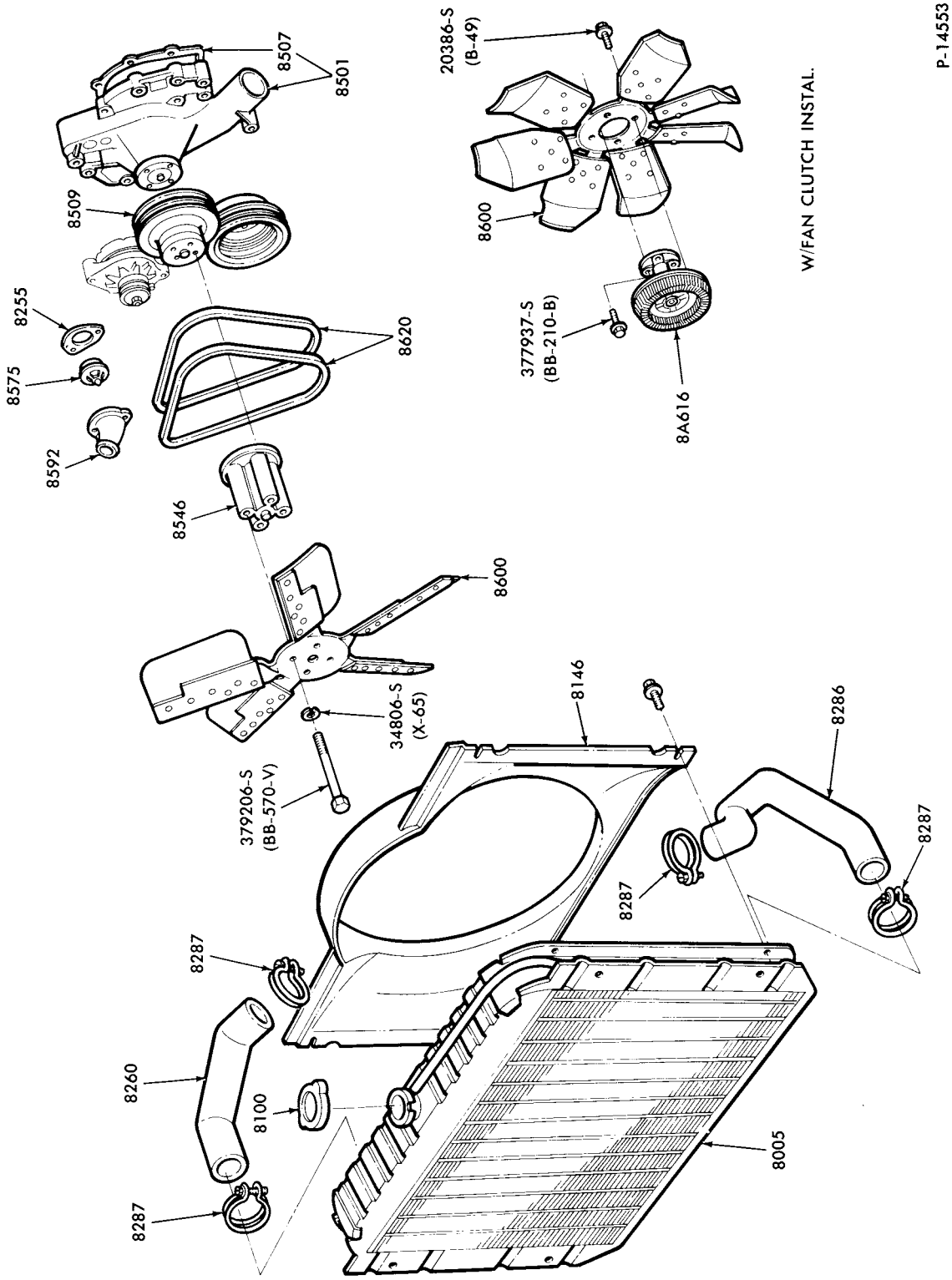

COOLING SYSTEM and RELATED PARTS
1977/ F100/350--8 CYL. 351M and 400

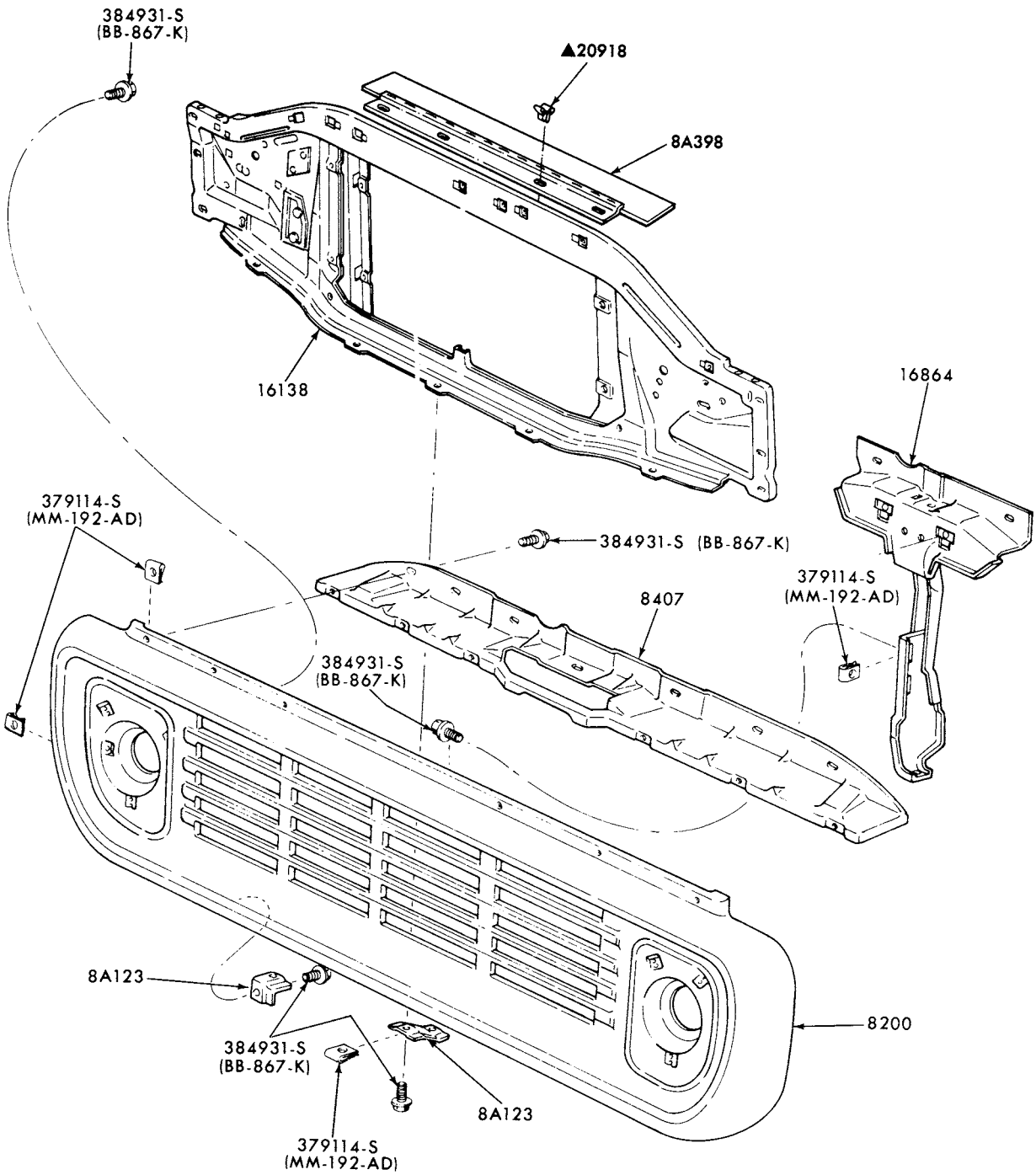

▲REFER TO BODY GROUP NUMBER

P-10217

RADIATOR GRILLE and RELATED PARTS
1973/77 B-F500

COPYRIGHT © 1979 — FORD MOTOR COMPANY — DEARBORN, MICHIGAN

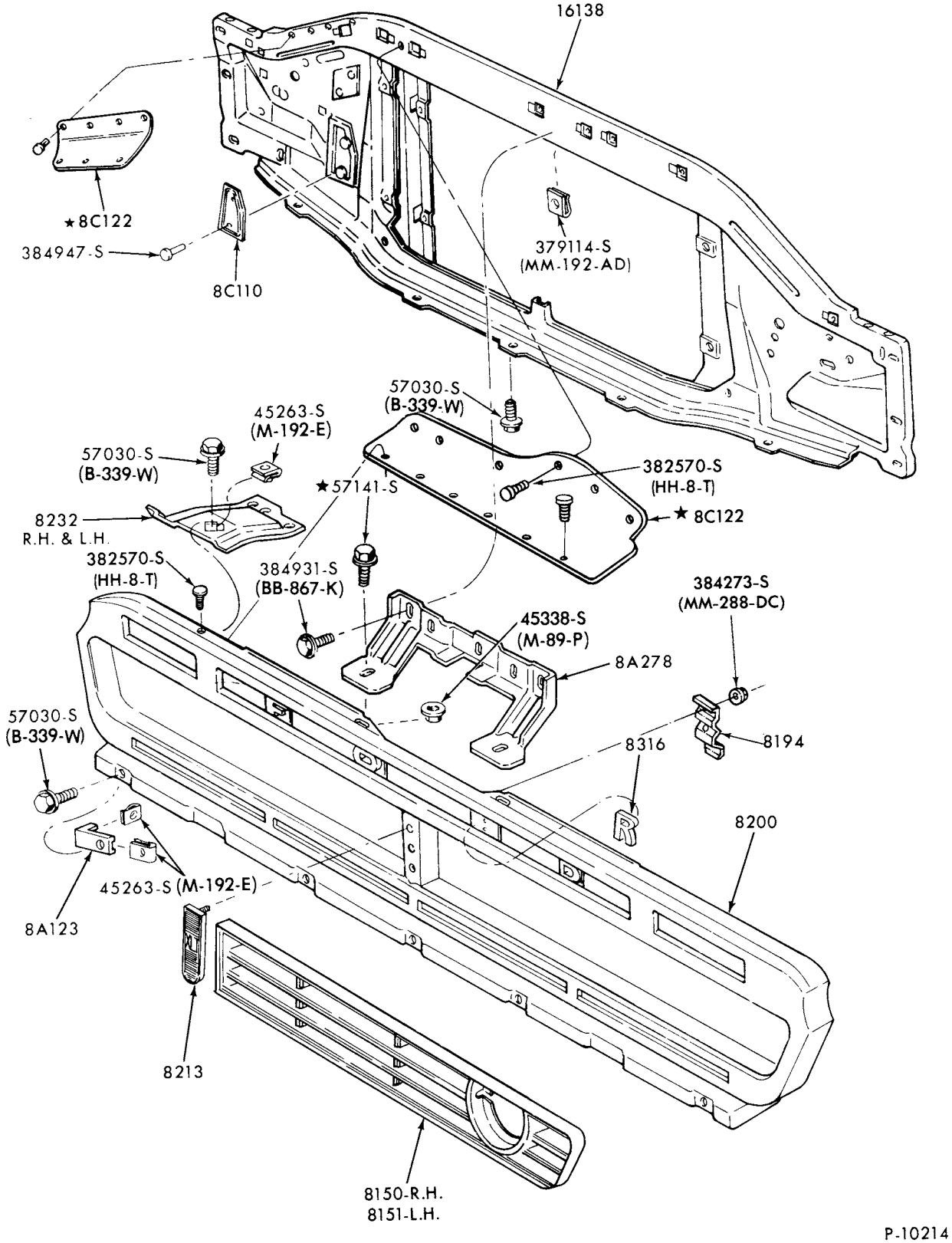

P-10214

RADIATOR GRILLE and RELATED PARTS
1973/77 F100/350

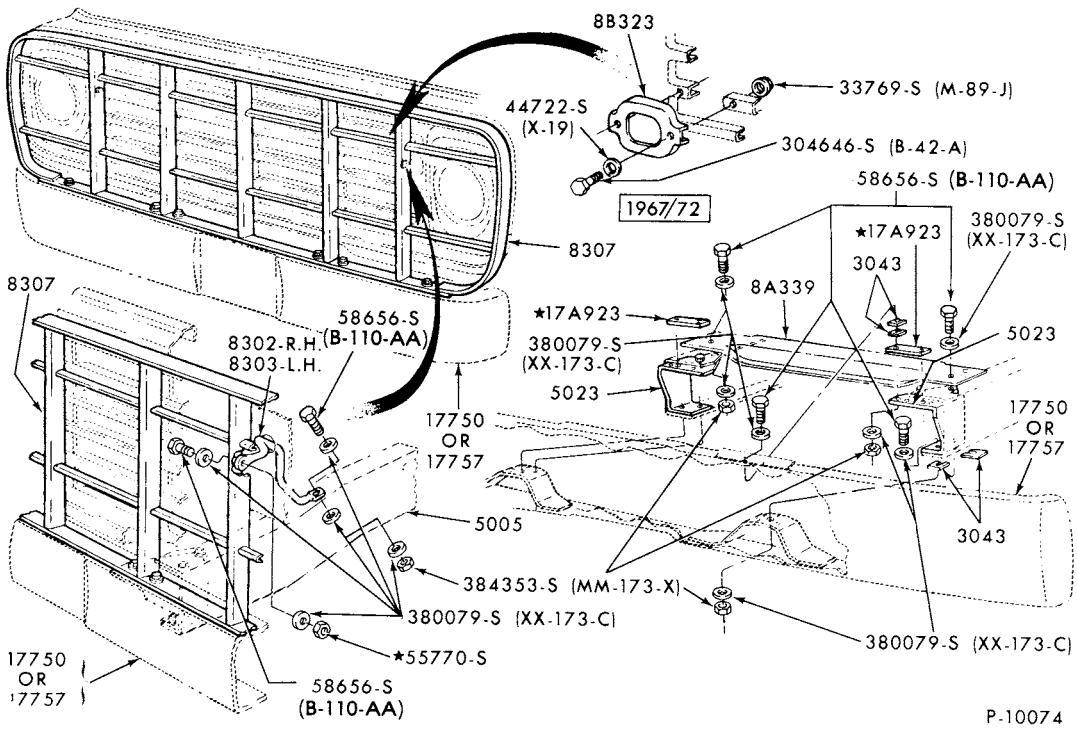

RADIATOR GRILLE GUARD
1973/77 B-F500

COPYRIGHT © 1979 FORD MOTOR COMPANY DEARBORN, MICHIGAN

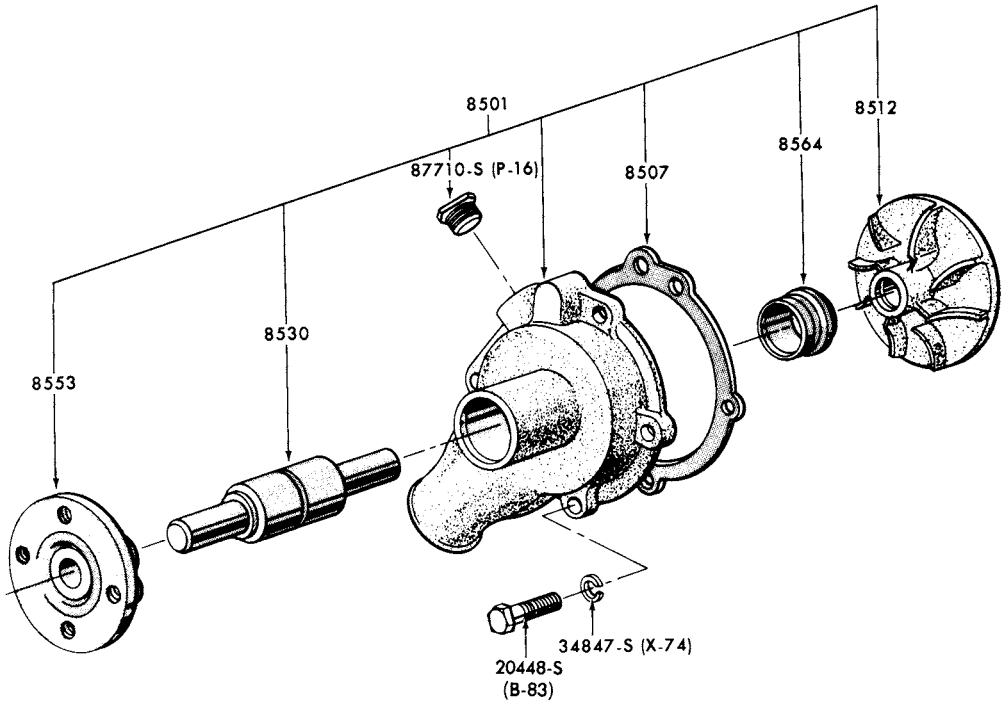

P-4731

WATER PUMP
1973/ 6 CYL. 240 and 300 L/D

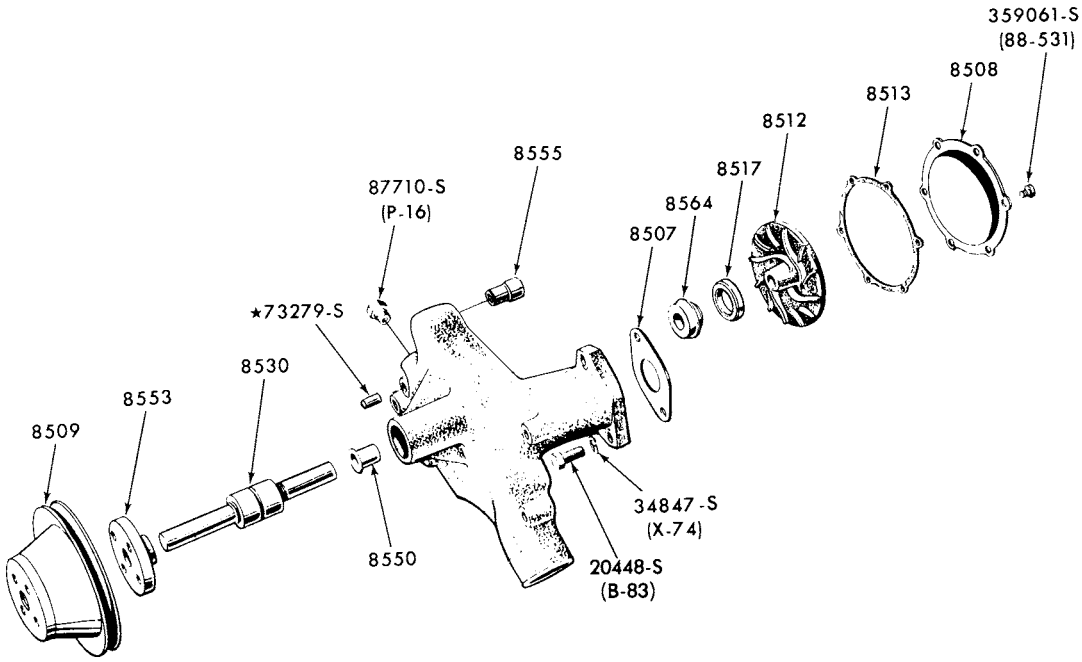

P-9198

WATER PUMP
1973/77 8 CYL. 330 M/D, 360 and 390

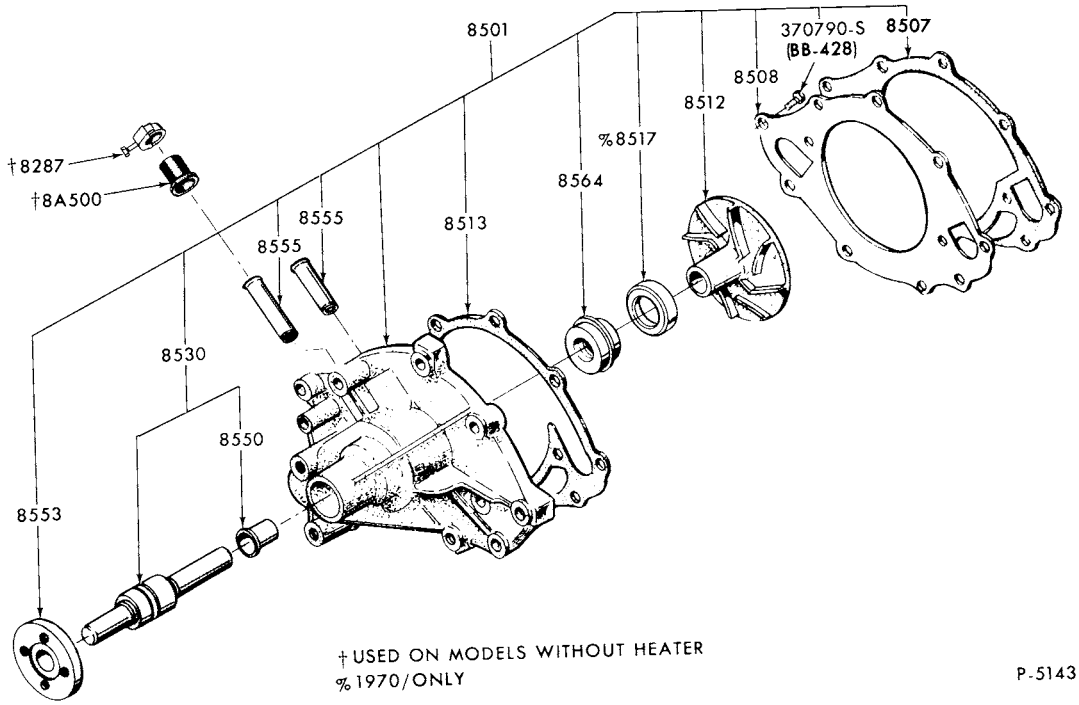

WATER PUMP
1973/ 8 CYL. 302 and 351W

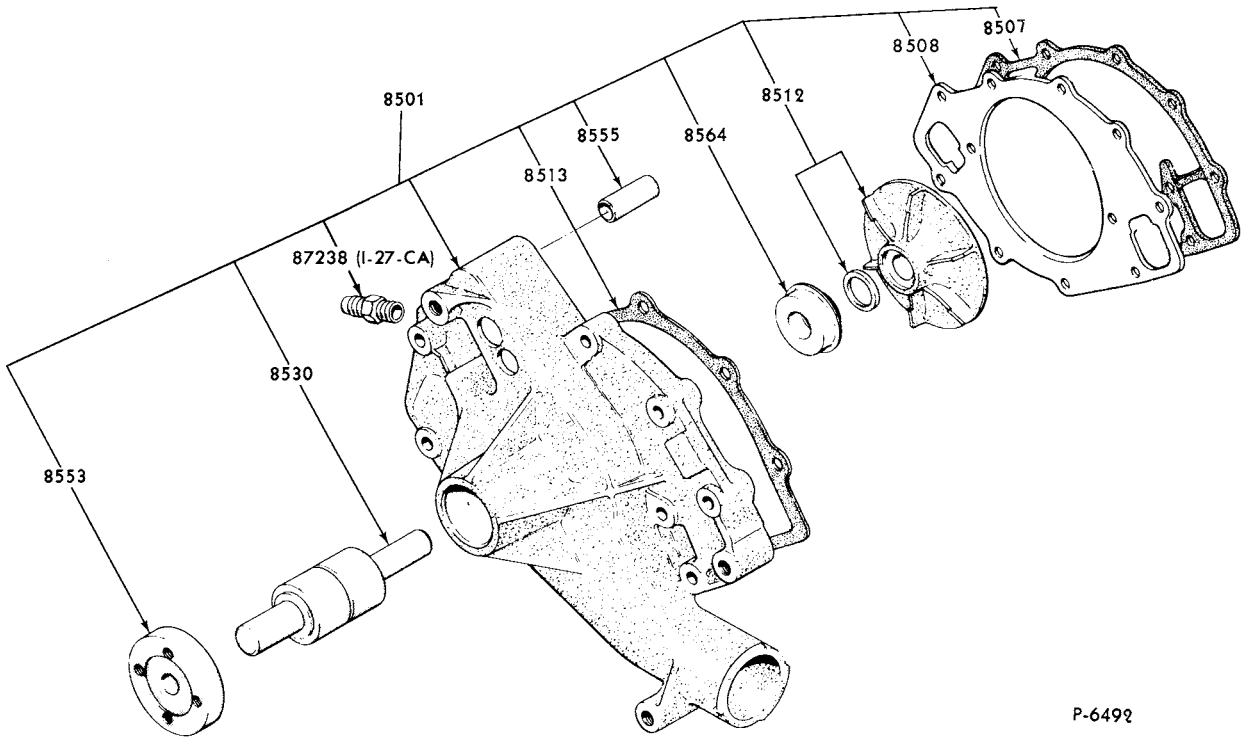

WATER PUMP
1973/ 8 CYL. 351M, 400 and 460

COPYRIGHT © 1979 FORD MOTOR COMPANY - DEARBORN, MICHIGAN

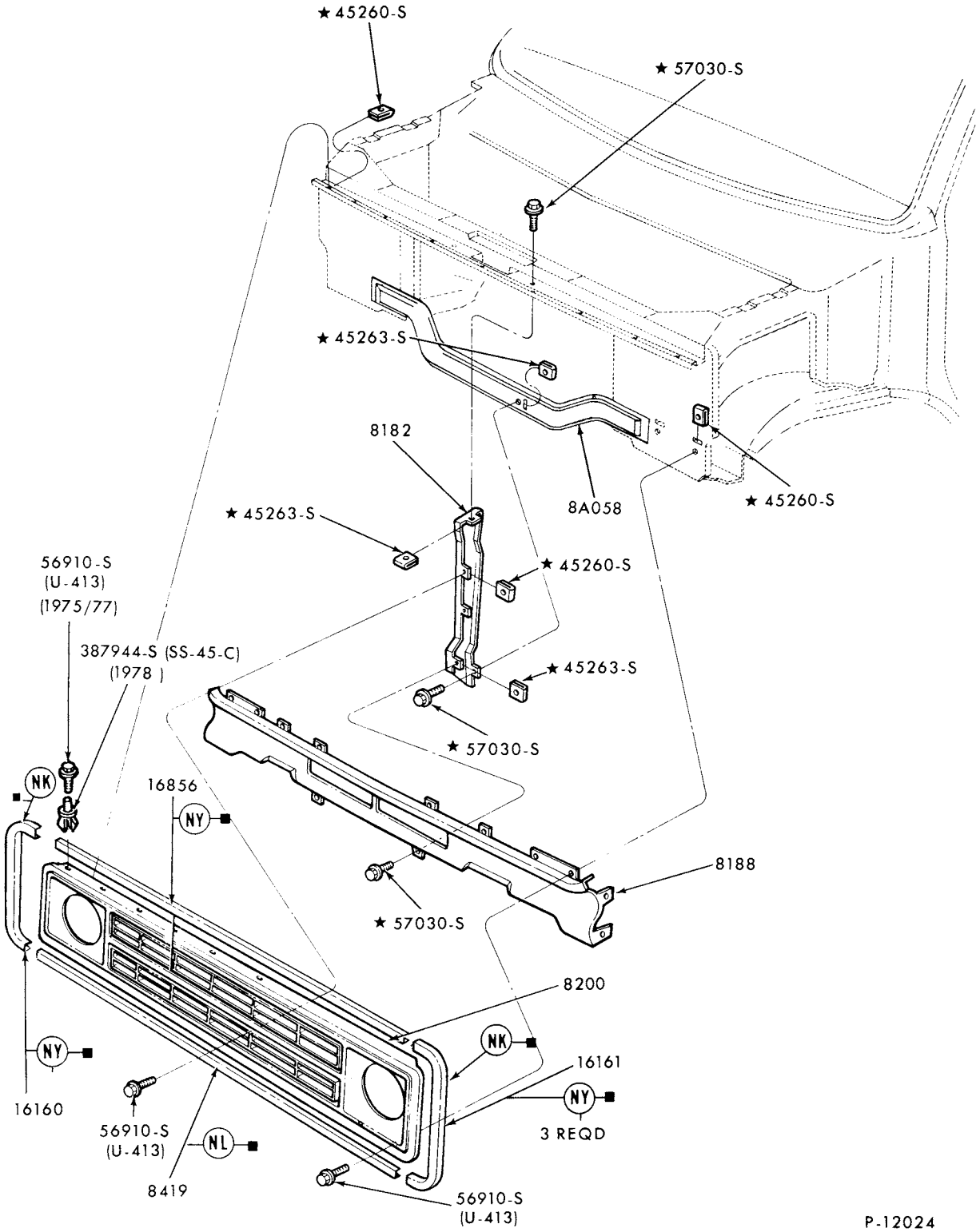

■ REFER TO EXTERIOR MOULDING SECTION "R" FOR COMPLETE RETAINER INFORMATION

RADIATOR GRILLE and RELATED PARTS
1975/78 E100/350

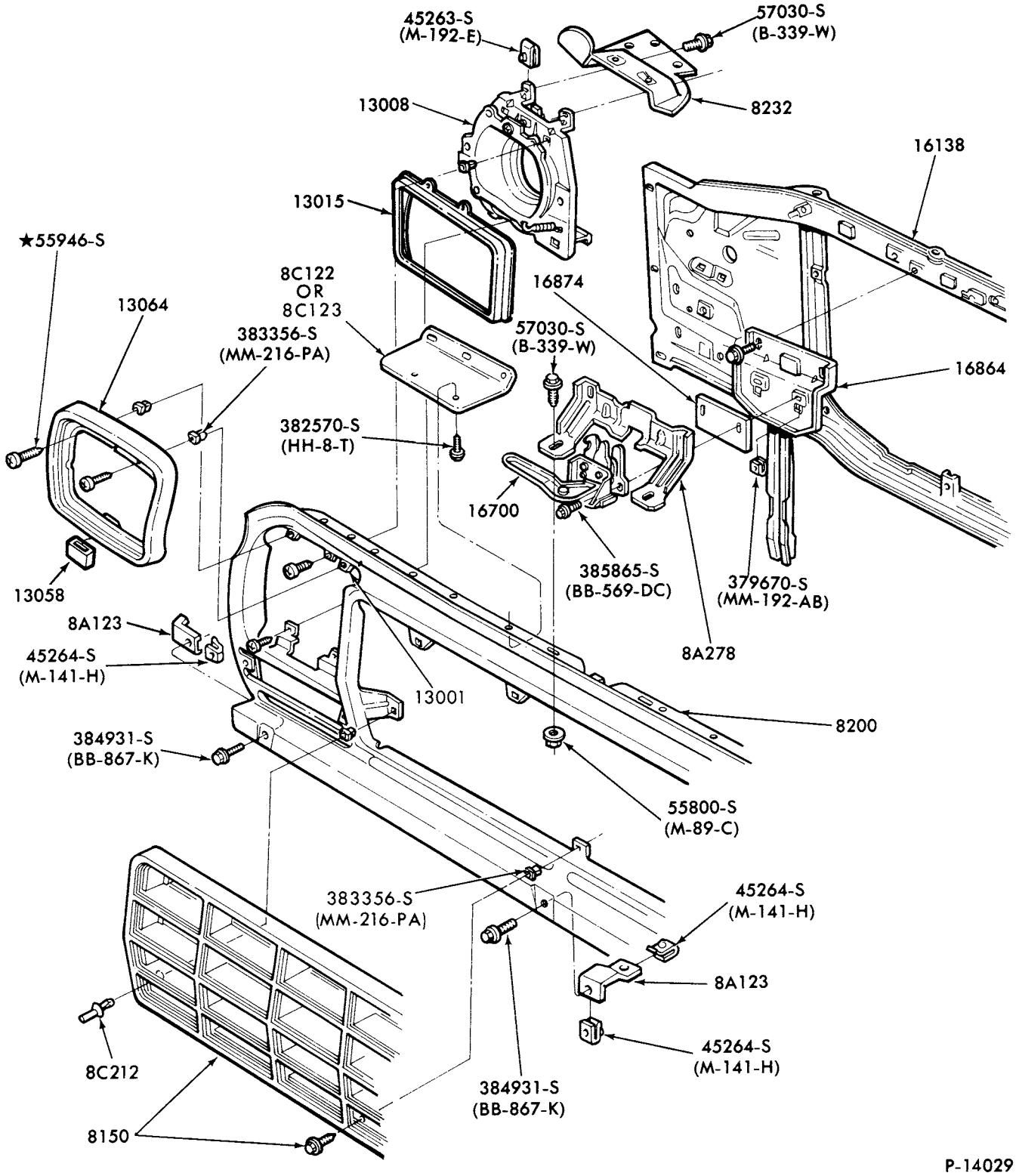

P-14029

RADIATOR GRILLE and RELATED PARTS
1978/ F100/350

COPYRIGHT © 1980 FORD MOTOR-DEARBORN, MICHIGAN COMPANY

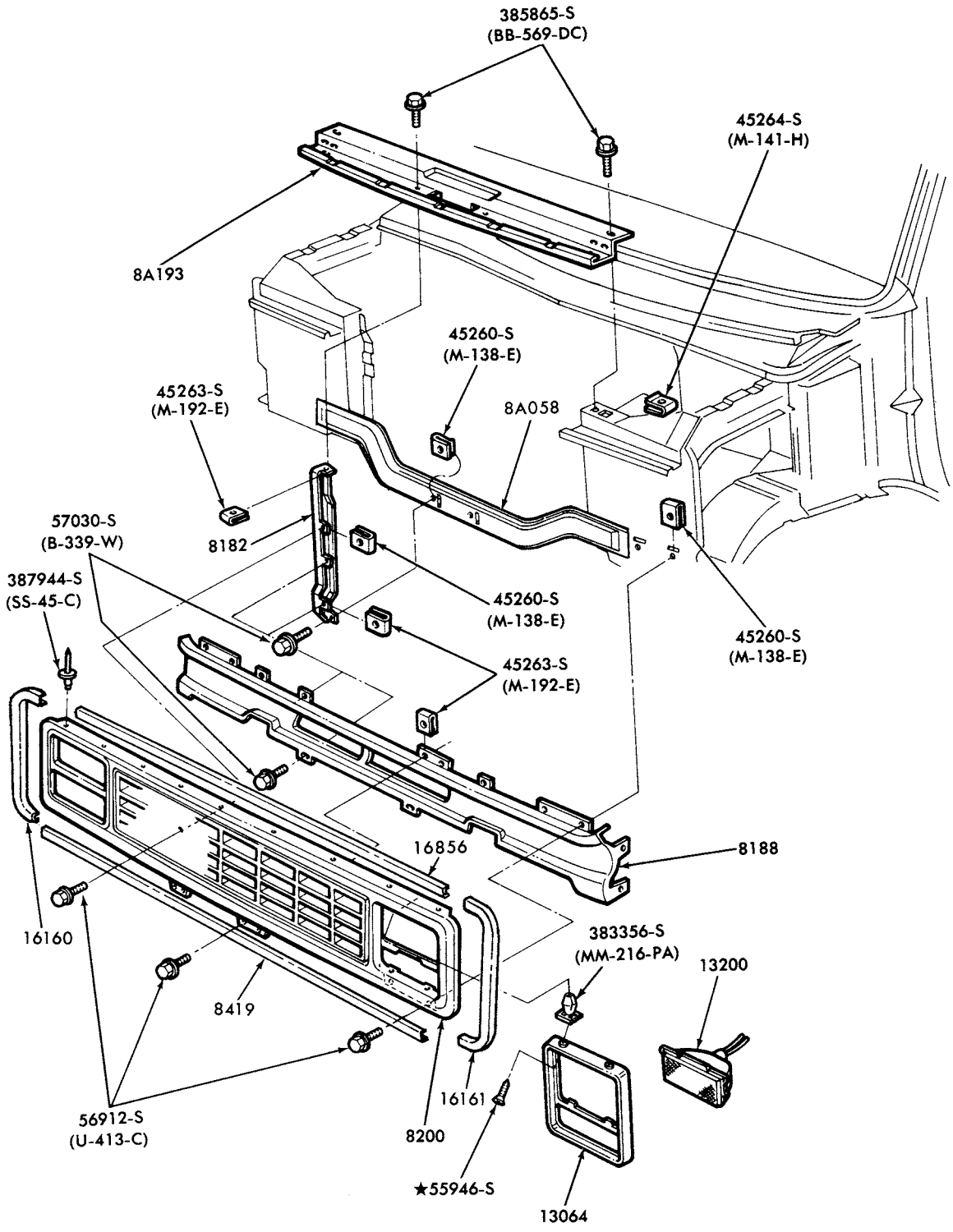

P-14827

RADIATOR GRILLE and RELATED PARTS
1979 E100/350

INDEX

THIS INDEX SECTION INCLUDES THE FOLLOWING ENGINES AND MAJOR GROUPS

ACCELERATOR LINKAGE
AIR CLEANER
CARBURETOR
EMISSION SYSTEM
FUEL FILTER
FUEL PUMP
FUEL and VACUUM PUMP
FUEL SYSTEM
MANIFOLD
SPEED CONTROL
THERMACTOR EMISSION CONTROL SYSTEM
THERMOSTATIC CHOKE CONTROL
VALVE - EXHAUST THERMOSTATIC CONTROL

1973/

YEAR	TITLE	SECTION	PAGE	ILLUS. NO.
6 CYL. 3.9L (240 C.I.D.)				
Accelerator and transmission linkage				
73/74	E100/300	97	1	P-6375
73	F100	97	2	P-5828
74	F100	97	7	P-10753
Air cleaner				
73/74	(dry type)-E100/300	96	1	P-10262
73/74	(dry type)-F100	96	2	P-10258
Carburetor				
73/74	(Carter 1/B)(thermostatic choke)--E100/300, F100	95	1	P-8904
Emission system-exhaust gas recirculation (E.G.R.)				
74	F100--with A/T and T/E	94.1	9	P-11348
74	E200/300--with A/T and T/E	94.1	10	P-11349
74	F100,E200/300--with M/T and T/E	94.1	11	P-11350
Fuel filler pipe installation				
73/74	F100 (81,83 and 99)--w/aft axle tank	90	13	P-10047
73/74	F100 (81 and 83)--with midship tank	90	12	P-10051
73/74	F100 (80,86 and 99)--2/W/D-midship tank	90	14	P-10050
Fuel system and related parts				
73/74	F100--2/W/D-midship tank	90	4	P-10048-A
73/74	F100--2/W/D-midship tank	90	5	P-10048-B
73/74	F100--2/W/D,4/W/D-aft axle tank	90	6	P-10045
73/74	E100/200 and E300 (82)--w/ev/em	90	2	P-8297
74	F100--w/in cab tank	90	7	P-10044
Manifold and related parts				
73/74		93	1	P-4861
Oil pressure sender installation with warning lights and gauges				
73/74	F100	93	3	P-4887
6 CYL. 4.9L (300 C.I.D.)				
Accelerator and transmission linkage				
73	F250/350	97	2	P-5828
73	P350/500	97	5	P-4773
73	B-F500	97	4	P-4772
74/	F100/350	97	7	P-10753
74/77	P350/500	97	10	P-10795
74/77	B-F500	97	11	P-10752
73/74	E100/300	97	1	P-6375
75/	E100/350	97	15	P-11565
77/	F100/350	97	18	P-15412
Air cleaner				
73/74	(dry type)-E100/300	96	1	P-10262
73/77	(oil bath type)-B-F500, P350/500	96	4	P-8555
73/	F250/350	96	3	P-11002
6 CYL. 4.9L (300 C.I.D.) - cont'd.				
Air cleaner-continued				
74	(dry type)-F100	96	2	P-10258
75/	(dry type)-F100	96	8	P-11849
75/77	(dry type)-E100/350	96	11	P-11890
78/	(dry type)-E100/350	96	17	P-16103
Carburetor				
73	(Carter 1/B)(thermostatic choke)--E100/300,F250/350	95	1	P-8904
74/76	(Carter 1/B)(thermostatic choke)--E100/300,F100/350	95	1	P-8904
77/	(Carter 1/B)(thermostatic choke)--E100, F100	95	9	P-12953
77/	(Carter 1/B)(thermostatic choke)--E150/350, F150/350	95	1	P-8904
73/77	(Carter 1/B)(manual choke)--B-F500, P350/500	95	2	P-6530
Emission system-exhaust gas recirculation (E.G.R.)				
74	F100,E100/200-with T/E	94.1	12	P-11351
78/	E-F100/350	94.1	25	P-14295
Fuel filler pipe installation				
73/	F100/350 (81,83 and 99)--2/W/D with aft axle tank	90	13	P-10047
73/	F100/350 (81 and 83)--2/W/D with midship tank	90	12	P-10051
73/	F100/350 (80,86 and 99)--2/W/D-midship tank	90	14	P-10050
75/	E100/350--aft axle tank	90	24	P-11738
75/	E100/350--midship tank	90	24	P-11739
78/	F150/250--4/W/D with midship tank	90	27	P-15028
78/	F150/250--4/W/D with aft axle tank	90	26	P-15027
Fuel pump				
78/	(Carter)-with filter	93	4	P-15818
Fuel system and related parts				
74	E100/300--w/ev/em	90	2	P-8297
73/74	E300--without ev/em	90	3	P-6378
73/74	F100/350 (exc. Super Cab)--2/W/D-midship tank	90	4	P-10048-A
73/	F100/350 (exc. Super Cab)--2/W/D-midship tank	90	5	P-10048-B
73/77	F500--w/18 and 30 gal. frame mounted rectangular tanks-without ev/em	90	10	P-10033
73/77	F500--w/in-cab tank-without ev/em	90	9	P-10032
73/77	P350/500--w/30 gal. rectangular tank-with ev/em	90	11	P-10053
73	F250--2/W/D-aft axle tank	90	6	P-10045
74	F100--2/W/D, 4/W/D and F250--2/W/D-aft axle tank	90	6	P-10045
75/	F100/350--w/aft axle tank	90	6	P-10045

COPYRIGHT © 1980 FORD MOTOR COMPANY —DEARBORN, MICHIGAN

INDEX

1973/

YEAR	TITLE	SECTION	PAGE	ILLUS. NO.
	6 CYL. 4.9L (300 C.I.D.) - cont'd.			
	Fuel system and related parts - continued			
73	F250--4/W/D with in-cab tank and 350--w/in-cab tank	90	7	P-10044
74/	F100/350(exc.w/Crew Cab)--w/in-cab tank	90	7	P-10044
73/74	B500--w/30 gal. frame mounted rectangular tank-without ev/em	90	1	P-10037
73/74	B500--w/30 gal. frame mtd. rectangular tank with ev/em	90	15	P-10395
73/77	P350/500--w/30 gal. frame mounted rectangular tank-without ev/em	90	12	P-10052
73/77	F500--w/18 and 30 gal. frame mounted rectangular tank with ev/em	90	16	P-10396
73/77	F500--w/in-cab tank with ev/em	90	17	P-10397
74/	F250/350(Crew Cab)--w/in-cab tank	90	19	P-11162
75/77	B500--w/30 gallon frame mounted rectangular tank-without ev/em	90	20	P-11740
75/77	B500--w/30 gallon frame mounted rectangular tank-with ev/em	90	21	P-11741
75/	E100/350--aft axle tank with ev/em	90	22	P-11764
75/	E100/350--midship tank with ev/em	90	23	P-11765
75/	F100/250 (Super Cab)--2/W/D-midship tank	90	25	P-12596
78/	F150/250--(Reg. Cab only)--4/W/D-aft axle tank and/or midship tank			
	- (Page A)	90	28	P-15010
	- (Page B)	90	29	P-15011
	Fuel tank - guard			
76/77	B500--w/30 gallon tanks	90	25	P-14539
	Fuel tank filler opening cover			
73/	F250/350	90	18	P-10546
	Fuel vapor canister and related parts			
75/77	E100/350	96.1	5	P-11863
78/	E100-except Canada	96.1	3	P-14289
78/	E100-Canada	96.1	3	P-14290
78/	E150/350-Calif.	96.1	3	P-14289
78/	F100-except Canada	96.1	2	P-14285
78/	F100-Canada	96.1	4	P-14286
78/	F150/350-Calif.	96.1	2	P-14285
	Manifold and related parts			
73/		93	1	P-4861
	Oil pressure sender installation with warning lights and gauges			
73	F250/350	93	3	P-4887
74/	F100/350	93	3	P-4887
	Thermactor emission control system			
74	E100/300, F100	94	1	P-11230
75/78	E100, F100	94	7	P-12723
79	E100, F100/350	94	7	P-15804
	8 CYL. 5.0L (302 C.I.D.)			
	Accelerator and transmission linkage			
73	E100/300	97	1	P-6376
73	F100	97	3	P-10747
74	E100/300	97	9	P-10756
74/	F100	97	8	P-10754
77/	F150	97	8	P-10754
	Air cleaner			
73/74	(dry type)-E100/300	96	1	P-10263
73	(dry type)-F100	96	2	P-10259
74	(dry type)-F100--without T/E	96	2	P-10259
74	(dry type)-F100--with T/E	96	6	P-11016
75/	(dry type)-F100	96	8	P-11850
	Carburetor			
73/74	(Ford 2/B)	95	4	P-9084
75/	(Ford 2/B)	95	6	P-12236
	Emission system-exhaust gas recirculation (E.G.R.)			
73	E100/300--with A/T and Aux. A/C	94.1	1	P-10501
73	E100/300--with A/T and without Aux. A/C	94.1	2	P-10500
73	E100/300--with M/T and Aux. A/C	94.1	3	P-10499
73	E100/300--with M/T and without Aux. A/C	94.1	4	P-10498
73	F100	94.1	5	P-10495
74	E100/300--with A/T-without T/E	94.1	13	P-11352
74	F100--with A/T-without T/E and/or A/C	94.1	13	P-11354
74	E100/300--with M/T-without T/E	94.1	14	P-11353
74	F100--with M/T-without T/E	94.1	15	P-11355
74	E100/200--with M/T, T/E and A/C	94.1	16	P-11356
74	E100/200--with M/T and T/E without A/C	94.1	16	P-11357
74	E100/200--with A/T and T/E without A/C	94.1	17	P-11358
74	F100--with A/T and T/E without A/C	94.1	18	P-11359
74	F100--with A/T, T/E and A/C	94.1	19	P-11360
78/	F100--without T/E	94.1	27	P-14297
78/	F100--with T/E	94.1	26	P-14296
	Fuel filler pipe installation			
73/	F100 (81, 83 and 99)--2/W/D with aft axle tank	90	13	P-10047
73/	F100 (80, 86 and 99)--2/W/D with midship tank	90	14	P-10050
73/	F100 (81 and 83)--2/W/D with midship tank	90	12	P-10051
75/	E100/350--aft axle tank	90	24	P-11738
75/	E100/350--midship tank	90	24	P-11739
78/	F150/250--4/W/D with midship tank	90	27	P-15028
78/	F150/250--4/W/D with aft axle tank	90	26	P-15027

INDEX

1973/

YEAR	TITLE	SECTION	PAGE	ILLUS. NO.
8 CYL. 5.0L (302 C.I.D.) - cont'd.				
Fuel pump				
73/77	(Carter)-with filter	93	2	P-3715
78/	(Carter)-with filter	93	4	P-15818
Fuel pump, fuel line and in-line filter installation				
73/	E100/350, F100	90	18	P-10545
Fuel system and related parts				
73/74	F100 (exc. Super Cab)--2/W/D-midship tank	90	4	P-10048-A
73/	F100 (exc. Super Cab)--2/W/D-midship tank	90	5	P-10048-B
73/	F100--2/W/D, 4/W/D-aft axle tank	90	6	P-10045
73/74	E100/200 and E300 (82)--with ev/em	90	2	P-8297
73/74	E300--without ev/em	90	3	P-6378
74/	F100--w/in-cab tank	90	7	P-10044
78/	(Carter)-with filter	93	4	P-15818
Fuel vapor canister and related parts				
78/	F100	96.1	4	P-14288
78/	F150-Calif.	96.1	4	P-14288
Oil pressure sender installation with warning lights and gauges				
73/	F100/150	93	3	P-4887
Speed control				
73/78	(dealer installed) F100/150--with A/T	97.1	1	P-12237
73/74	(dealer installed) E100/300--with A/T	97.1	1	P-12237
79	(dealer installed) F100/350--with A/T	97.1	1	P-15087
Thermactor emission control system				
74	E100/300	94	2	P-11227
74	F100	94	3	P-11228
75/	F100-A/T	94	6	P-12721
75/	F100-M/T	94	6	P-12722
8 CYL. 5.4L (330 C.I.D.)				
Accelerator and transmission linkage				
73	(M/T)-B-F500	97	6	P-10750
74/77	B-F500	97	12	P-10757
Carburetor				
73/77	(Ford 2/B)	95	3	P-5105
Fuel pump				
73/77	(Carter)-with filter	93	2	P-3715
Fuel system and related parts				
73/77	F500--w/18 and 30 gal. frame mounted rectangular tanks-without ev/em	90	10	P-10033
73/77	F500--w/in-cab tank-without ev/em	90	9	P-10032
73/74	B500--w/30 gal. frame mounted rectangular tank-without ev/em	90	1	P-10037
73/74	B500--w/30 gal. frame mtd. rectangular tank with ev/em	90	15	P-10395
73/77	F500--w/18 and 30 gal. frame mtd. rectangular tank with ev/em	90	16	P-10396
8 CYL. 5.4L (330 C.I.D.) - cont'd.				
Fuel system and related parts - continued				
73/77	F500--w/in-cab tank with ev/em	90	17	P-10397
75/77	B500--w/30 gal. frame mtd. rectangular tank-without ev/em	90	20	P-11740
75/77	B500--w/30 gal. frame mtd. rectangular tank-with ev/em	90	21	P-11741
Fuel tank - guard				
76/77	B500--w/30 gallon tanks	90	25	P-14539
Thermactor emission control system				
75/77	F-B500	94	8	P-13024
8 CYL. 5.8L (351 C.I.D.)-M				
Accelerator and transmission linkage				
77/	F100/350	97	17	P-13446
Air cleaner				
77/	(dry type)-F100/350	96	14	P-13437
77/	(oil bath type)-F100/350	96	15	P-13438
79	(dry type)-E100/350	96	16	P-16101
Carburetor				
77/	(Ford 2/B)	95	6	P-12236
Emission system-exhaust gas recirculation (E.G.R.)				
77	F150/350-Calif. only	94.1	31	P-14301
78/	F150/250-Calif. only	94.1	30	P-14300
78/	F350-Calif. only	94.1	31	P-14301
78/	F100	94.1	32	P-14302
Fuel pump				
78/	(Carter)-with filter	93	4	P-15818
Fuel system and related parts				
78/	F150/350--4/W/D-aft axle tank and/or midship tank (exc. F150 and F350 Crew Cab)			
	- (Page A)	90	28	P-15010
	- (Page B)	90	29	P-15011
Fuel filler pipe installation				
75/	E100/350--aft axle tank	90	24	P-11738
75/	E100/350--midship tank	90	24	P-11739
73/	F100/350 (81 and 83)--2/W/D with midship tank	90	12	P-10051
73/	F100/350 (81, 83 and 99)--2/W/D with aft axle tank	90	13	P-10047
73/	F100/350 (80, 86 and 99)--2/W/D with midship tank	90	14	P-10050
78/	F150/350--4/W/D with midship tank	90	27	P-15028
78/	F150/350--4/W/D with aft axle tank	90	26	P-15027
Fuel vapor canister and related parts				
78/	F100	96.1	4	P-14288
78/	F150-Calif.	96.1	1	P-14287
Speed control				
77/	(factory installed)-engine compartment-F150/350	97.1	6	P-13445
77/	(factory installed)-passenger compartment-F150/350	97.1	2	P-12216-A
77/78	(dealer installed)-F100/350	97.1	1	P-12237
79	(dealer installed) F100/350--with A/T	97.1	1	P-15087

COPYRIGHT © 1980 — FORD MOTOR COMPANY — DEARBORN, MICHIGAN

INDEX

1973/

YEAR	TITLE	SECTION	PAGE	ILLUS. NO.
8 CYL. 5.8L (351 C.I.D.)-W				
	Accelerator and transmission linkage			
75/	E100/350	97	16	P-11665
	Air cleaner			
75/77	(dry type)-E100/350	96	12	P-11888
78/	(dry type)-E100/350	96	18	P-16100
	Carburetor			
75/	(Ford 2/B)	95	6	P-12236
	Emission system-exhaust gas recirculation (E.G.R.)			
78/	E150/250-Calif. only	94.1	28	P-14298
78/	E100-except Calif.	94.1	28	P-14298
77	E150/350-Calif. only	94.1	29	P-14299
78/	E350-Calif. only	94.1	29	P-14299
	Fuel filler pipe installation			
75/	E100/350--aft axle tank	90	24	P-11738
75/	E100/350--midship tank	90	24	P-11739
	Fuel pump			
78/	(Carter)-with filter	93	4	P-15818
	Fuel system and related parts			
75/	E100/350--aft axle tank with ev/em	90	22	P-11764
75/	E100/350--midship tank with ev/em	90	23	P-11765
	Fuel vapor canister and related parts			
75/77	E100/350	96.1	5	P-11863
78/	E100	96.1	3	P-14289
78/	E150/350-Calif.	96.1	3	P-14289
	Speed control			
75/78	(dealer installed) E100/350--with A/T	97.1	1	P-12237
79	(dealer installed) F100/350--with A/T	97.1	1	P-15087
	Thermactor emission control system			
75/	E100-except Calif.	94	5	P-12719
75/	E100-Calif. only	94	5	P-12720
8 CYL. 5.9L (360 C.I.D.)				
	Accelerator and transmission linkage			
73	F100/350	97	3	P-10747
74/76	F100/350	97	12	P-10912
73/74	M450/500	97	14	P-11772
74/76	M450/500	97	13	P-11570
	Air cleaner			
73	(dry type)-F100/350	96	3	P-10260
73	(dry type)-F100--without T/E	96	6	P-10261
74	(dry type)-F100--without T/E	96	3	P-10260
74/76	(dry type)-F250/350	96	3	P-10260
74	(dry type)-F100--with T/E	96	4	P-11013
73/76	(dry type)-M450/500	96	10	P-11611
75/76	(dry type)-F100	96	9	P-11851
	Carburetor			
73/74	(Ford 2/B)	95	4	P-9084
75/76	(Ford 2/B)	95	6	P-12236
8 CYL. 5.9L (360 C.I.D.) - cont'd.				
	Emission system-exhaust gas recirculation (E.G.R.)			
73	F100--with M/T and A/C	94.1	7	P-10493
73	F100--with M/T and without A/C	94.1	8	P-10492
73	F250/350	94.1	6	P-10494
74	F100--without T/E	94.1	20	P-11361
74	F250/350--without T/E	94.1	21	P-11362
74	F100--with A/T and T/E	94.1	22	P-11364
74	F100--with M/T and T/E	94.1	23	P-11366
	Fuel filler pipe installation			
73/76	F100/350 (81, 83 and 99)--w/ aft axle tank	90	13	P-10047
73/76	F100/350 (80, 86 and 99)--2/W/D with midship tank	90	14	P-10050
73/76	F100/350 (81 and 83)--with midship tank	90	12	P-10051
	Fuel system and related parts			
73/76	F350 (Super Camper)--w/aft axle plastic tank and midship tank	90	8	P-10046
73/74	F100/350 (exc. Super Cab)--2/W/D-midship tank	90	4	P-10048-A
73/76	F100/350 (exc. Super Cab)--2/W/D-midship tank	90	5	P-10048-B
73/74	F100--2/W/D, 4/W/D and F250--2/W/D-aft axle tank	90	6	P-10045
75/76	F100/350--w/aft axle tank	90	6	P-10045
73	F250--4/W/D with in-cab tank and F350--w/in-cab tank	90	7	P-10044
74/76	F100/350(exc.w/Crew Cab)--w/in-cab tank	90	7	P-10044
74/76	F250/350(Crew Cab)--w/in-cab tank	90	19	P-11162
73/74	M450/500--w/30 gal.frame mounted rectangular tank-without ev/em	90	1	P-10037
73/76	M450/500--w/30 gal.frame mounted rectangular tank-with ev/em	90	17	P-11423
74/76	F100/350 (Super Cab)--2/W/D-midship tank	90	25	P-12596
	Fuel tank filler opening cover			
73/76	F250/350	90	18	P-10546
	Oil pressure sender installation with warning lights and gauges			
73/76	F100/350	93	3	P-4887
	Speed control			
73/76	(dealer installed) F100/350--with A/T	97.1	1	P-12237
79	(dealer installed) F100/350--with A/T	97.1	1	P-15087
	Thermactor emission control system			
74	F100-except Calif.	94	4	P-11226
75/76	F100/350, M450/500	94	4	P-11226
	Valve assy.-exhaust thermostat control			
73/74	F100	93	1	P-10485

INDEX

1973/

YEAR	TITLE	SECTION	PAGE	ILLUS. NO.
8 CYL. 6.4L (390 C.I.D.)				
Accelerator and transmission linkage				
73	F100/350	97	3	P-10747
74/76	F100/350	97	12	P-10912
73/74	M450/500	97	14	P-11772
74/76	M450/500	97	13	P-11570
Air cleaner				
73	(dry type)-F100/350	96	3	P-10260
73	(dry type)-F100--without T/E	96	6	P-10261
74/76	(dry type)-F250/350	96	3	P-10260
74	(dry type)-F100	96	4	P-11013
73/76	(dry type)-M450/500	96	10	P-11611
75/76	(dry type)-F100	96	9	P-11851
Carburetor				
73/74	(Ford 2/B)	95	4	P-9084
75/76	(Ford 2/B)	95	6	P-12236
74/76	(Holly 2/B)	95	8	P-12933
Emission system-exhaust gas recirculation (E.G.R.)				
73	F100--with M/T and A/C	94.1	7	P-10493
73	F100--with M/T and without A/C	94.1	8	P-10492
73	F250/350	94.1	6	P-10494
74	F100--without T/E	94.1	20	P-11361
74	F250/350--without T/E	94.1	21	P-11362
Fuel filler pipe installation				
73/76	F100/350 (81, 83 and 99)--w/aft axle tank	90	13	P-10047
73/76	F100/350 (80, 86 and 99)--2/W/D with midship tank	90	14	P-10050
73/76	F100/350 (81 and 83)--with midship tank	90	12	P-10051
Fuel system and related parts				
73/76	F350 (Super Camper)--w/aft axle plastic tank and midship tank	90	8	P-10046
73/74	F100/350 (exc. Super Cab)--2/W/D-midship tank	90	4	P-10048-A
73/76	F100/350 (exc. Super Cab)--2/W/D-midship tank	90	5	P-10048-B
73/74	F100--2/W/D, 4/W/D and F250--2/W/D-aft axle tank	90	6	P-10045
75/76	F100/350--w/aft axle tank	90	6	P-10045
73	F250--4/W/D with in-cab tank and F350--w/in-cab tank	90	7	P-10044
74/76	F100/350(exc.w/Crew Cab)--w/in-cab tank	90	7	P-10044
74/76	F250/350(Crew Cab)--w/in-cab tank	90	19	P-11162
73/74	M450/500--w/30 gal.frame mounted rectangular tank-without ev/em	90	1	P-10037
73/76	M450/500--w/30 gal.frame mounted rectangular tank-with ev/em	90	17	P-11423
74/76	F100/350 (Super Cab)--2/W/D-midship tank	90	25	P-12596
Fuel tank filler opening cover				
73/76	F250/350	90	18	P-10546
8 CYL. 6.4L (390 C.I.D.) - cont'd.				
Oil pressure sender installation with warning lights and gauges				
73/76	F100/350	93	3	P-4887
Speed control				
73/76	(dealer installed)-F100/350--with A/T	97.1	1	P-12237
79	(dealer installed) F100/350--with A/T	97.1	1	P-15087
Thermactor emission control system				
74	F100-except Calif.	94	4	P-11226
75/76	F100/350, M450/500	94	4	P-11226
Valve assy.-exhaust thermostat control				
73/74	F100	93	1	P-10485
8 CYL. 6.6L (400 C.I.D.)				
Accelerator and transmission linkage				
77/	F100/350	97	17	P-13446
Air Cleaner				
77/	(dry type)-F100/350	96	14	P-13437
77/	(oil bath type)-F100/350	96	15	P-13438
79	(dry type)-E100/350	96	16	P-16101
Carburetor				
75/	(Ford 2/B)	95	6	P-12236
Emission system-exhaust gas recirculation (E.G.R.)				
77	F150/350-Calif. only	94.1	31	P-14301
78/	F150/250-Calif. only	94.1	30	P-14300
78/	F350-Calif. only	94.1	31	P-14301
78/	F100	94.1	32	P-14302
Fuel filler pipe installation				
75/	E100/350--aft axle tank	90	24	P-11738
75/	E100/350--midship tank	90	24	P-11739
73/	F100/350 (81, 83 and 99)--2/W/D with aft axle tank	90	13	P-10047
73/	F100/350 (81 and 83)--2/W/D with midship tank	90	12	P-10051
73/	F100/350 (80, 86 and 99)--2/W/D with midship tank	90	14	P-10050
78/	F150/350--4/W/D with midship tank	90	27	P-15028
78/	F150/350--4/W/D with aft axle tank	90	26	P-15027
Fuel pump				
78/	(Carter)-with filter	93	4	P-15818
Fuel system and related parts				
78/	F150/350--4/W/D-aft axle tank and/or midship tank (exc. F150 and F350 Crew Cab) - (Page A)	90	28	P-15010
	- (Page B)	90	29	P-15011
Fuel vapor canister and related parts				
78/	F150, F350-Calif. only	96.1	4	P-14288
78/	F250-Calif. only	96.1	1	P-14287
Speed control				
77/	(factory installed)-engine compartment-F100/350	97.1	6	P-13445
77/	(factory installed)-passenger compartment-F150/350	97.1	2	P-12216-A
77/78	(dealer installed)-F100/350	97.1	1	P-12237
79	(dealer installed) F100/350--with A/T	97.1	1	P-15087

COPYRIGHT © 1980 — FORD MOTOR COMPANY —DEARBORN, MICHIGAN

INDEX

1973/

YEAR	TITLE	SECTION	PAGE	ILLUS. NO.
8 CYL. 7.5L (460 C.I.D.)				
Accelerator and transmission linkage				
73	F250/350	97	3	P-10748
74/	F100/350	97	8	P-10755
74/76	M450/500	97	13	P-11570
75/	E250/350	97	16	P-11665
Air cleaner				
73	(dry type) F250/350	96	3	P-10260
74/	(dry type)-F100	96	5	P-11014
74/	(dry type)-F150/350	96	5	P-11015
74/76	(dry type)-M450/500	96	7	P-11567
75/	(dry type)-E250/350	96	13	P-11889
Carburetor				
73/74	(Ford 4/B)	95	5	P-10793
75/78	(Ford 4/B)	95	7	P-12219
79	(Holley 4/B)	95	10	P-15154
Emission system-exhaust gas recirculation (E.G.R.)				
74	F100/350--with A/T	94.1	24	P-11368
78/	E250/350 and F150/350	94.1	33	P-14304
Fuel filler pipe installation				
73/	F100/350(81, 83 and 99)--2/W/D with aft axle tank	90	13	P-10047
73/	F100/350(80, 86 and 99)--2/W/D with midship tank	90	14	P-10050
73/	F100/350(81 and 83)--2/W/D with midship tank midship tank	90	12	P-10051
75/	E100/350--aft axle tank	90	24	P-11738
75/	E100/350--midship tank	90	24	P-11739
78/	F150/350--4/W/D with midship tank	90	27	P-15028
78/	F150/350--4/W/D with aft axle tank	90	26	P-15027
Fuel pump				
78/	(Carter)-with filter	93	4	P-15818
Fuel system and related parts				
73/	F350 (Super Camper)--w/aft axle plastic tank and mid-ship tank	90	8	P-10046
73/74	F100/350 (exc. Super Cab)--2/W/D w/midship tank	90	4	P-10048-A
73/	F100/350 (exc. Super Cab)--2/W/D w/midship tank	90	5	P-10048-B
73	F250--2/W/D w/aft axle tank	90	3	P-10045
74	F100--2/W/D, 4/W/D and F250--2/W/D-aft axle tank	90	6	P-10045
75/	F100/350--w/aft axle tank	90	6	P-10045
73	F350--w/in-cab tank	90	7	P-10044
74/	F100/350(exc.w/Crew Cab)--w/in-cab tank	90	7	P-10044
74/	F250/350(Crew Cab)--w/in-cab tank	90	19	P-11162
8 CYL. 7.5L (460 C.I.D.) - cont'd.				
Fuel system and related parts - cont'd.				
75/	E250/350--aft axle tank with ev/em	90	22	P-11764
75/	E250/350--midship tank with ev/em	90	23	P-11765
74/	F150/350 (Super Cab)--2/W/D-midship tank	90	25	P-12596
78/	F150/350--4/W/D--aft axle tank and/or midship tank (exc. F150 and F350 Crew Cab)			
	- (Page A)	90	28	P-15010
	- (Page B)	90	29	P-15011
Fuel tank filler opening cover				
73/	F250/350	90	18	P-10546
Fuel vapor canister and related parts				
75/77	E250/350	96.1	5	P-11863
78/	F150/350-Calif. only	96.1	4	P-14288
78/	E250/350-Calif. only	96.1	3	P-14289
Oil pressure sender installation with warning lights and gauges				
73	F250/350	93	3	P-4887
74/	F100/350	93	3	P-4887
Speed control				
73/78	(dealer installed)-E100/350, F100/350--with A/T	97.1	1	P-12237
75/	(factory installed)-passenger compartment-F150/350	97.1	2	P-12216-A
75/	(factory installed)-engine compartment-F150/350	97.1	3	P-12216-B
75/	(factory installed)-passenger compartment-E250/350	97.1	4	P-12344-A
75/	(factory installed)-engine compartment-E250/350	97.1	5	P-12344-B
79	(dealer installed) F100/350--with A/T	97.1	1	P-15087

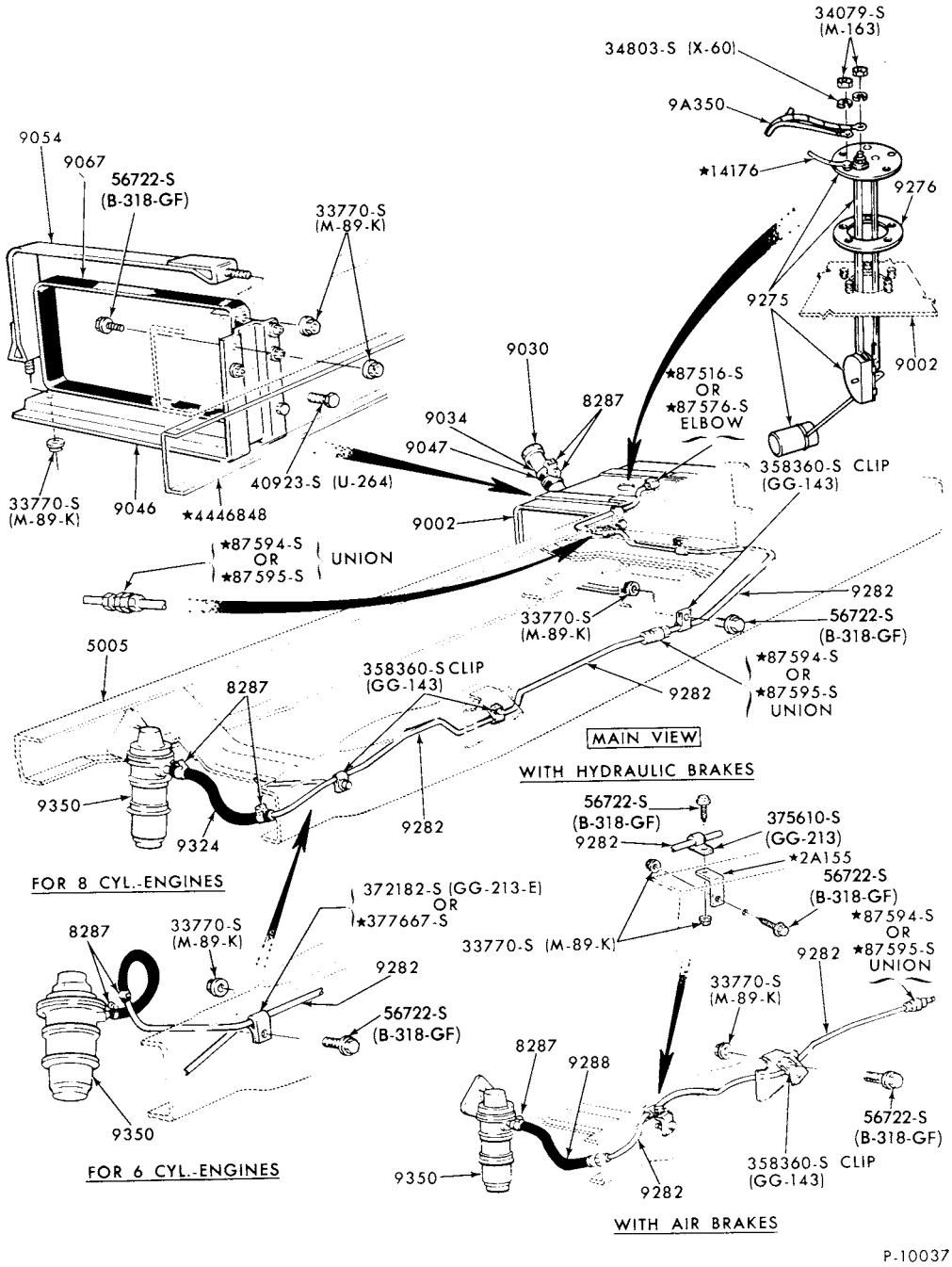

FUEL SYSTEM and RELATED PARTS

1973/74 B500 and M450/500--w/30 GALLON FRAME MOUNTED RECTANGULAR TANK and w/o EVAPORATIVE EMISSION

—FORD MOTOR—DEARBORN, MICHIGAN COMPANY
COPYRIGHT © 1979

1973/79 TRUCK SERIES 100/500

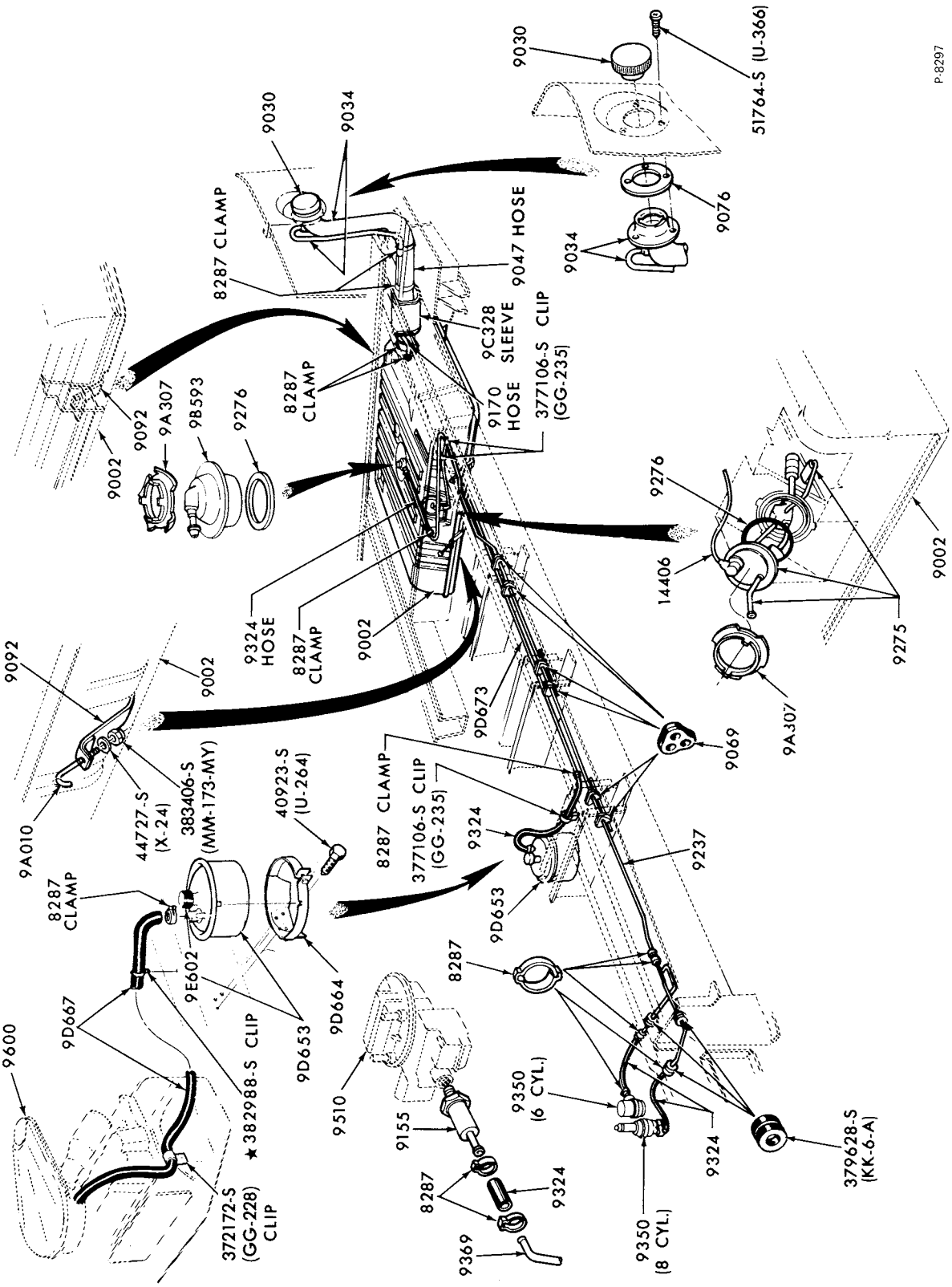

FUEL SYSTEM and RELATED PARTS
1973/74 E100/200 and E300 (82)--w/EVAPORATIVE EMISSION

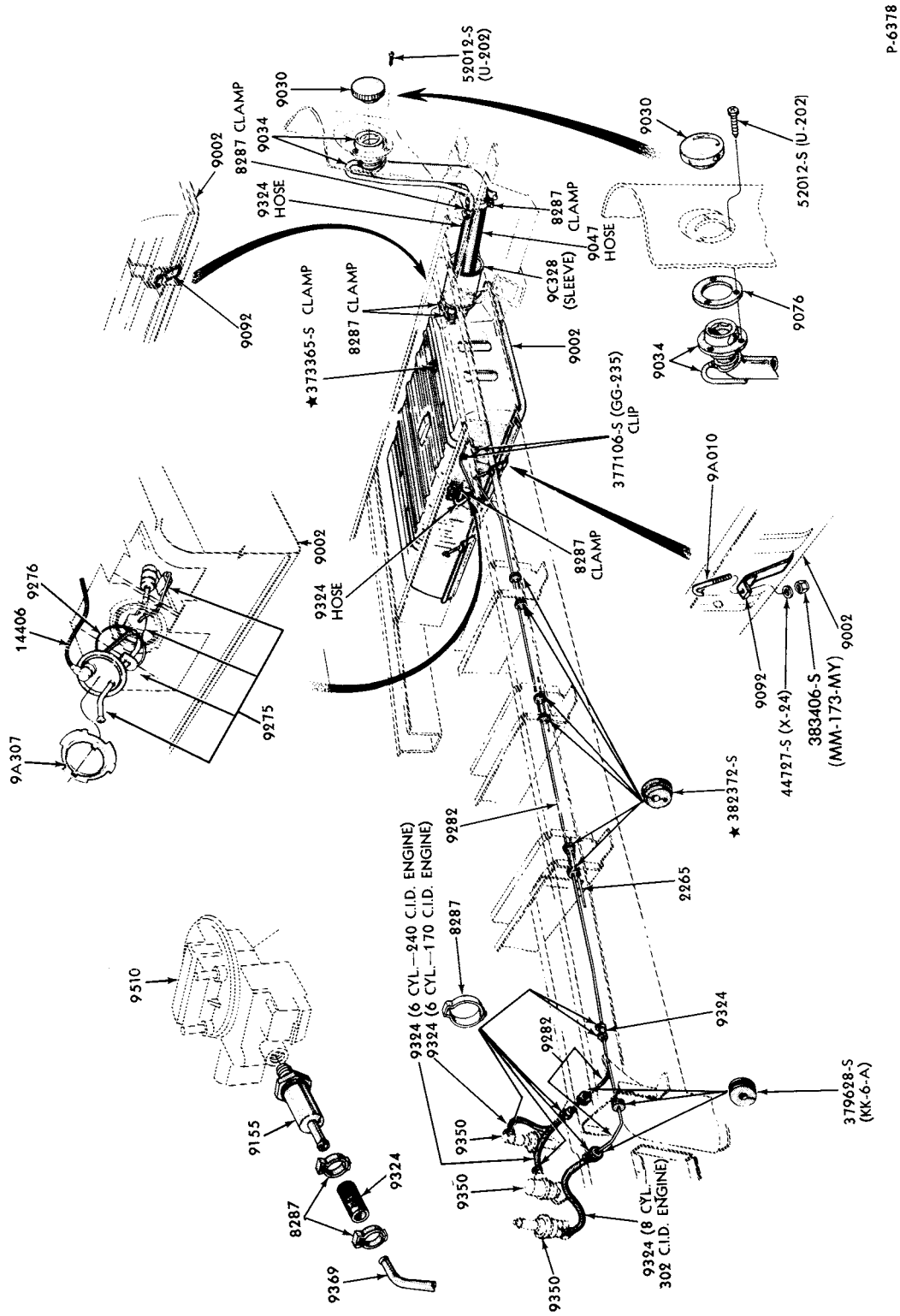

FUEL SYSTEM and RELATED PARTS
1973/74 E300 (89)--w/o EVAPORATIVE EMISSION

FORD MOTOR—DEARBORN, MICHIGAN
COMPANY
COPYRIGHT © 1979

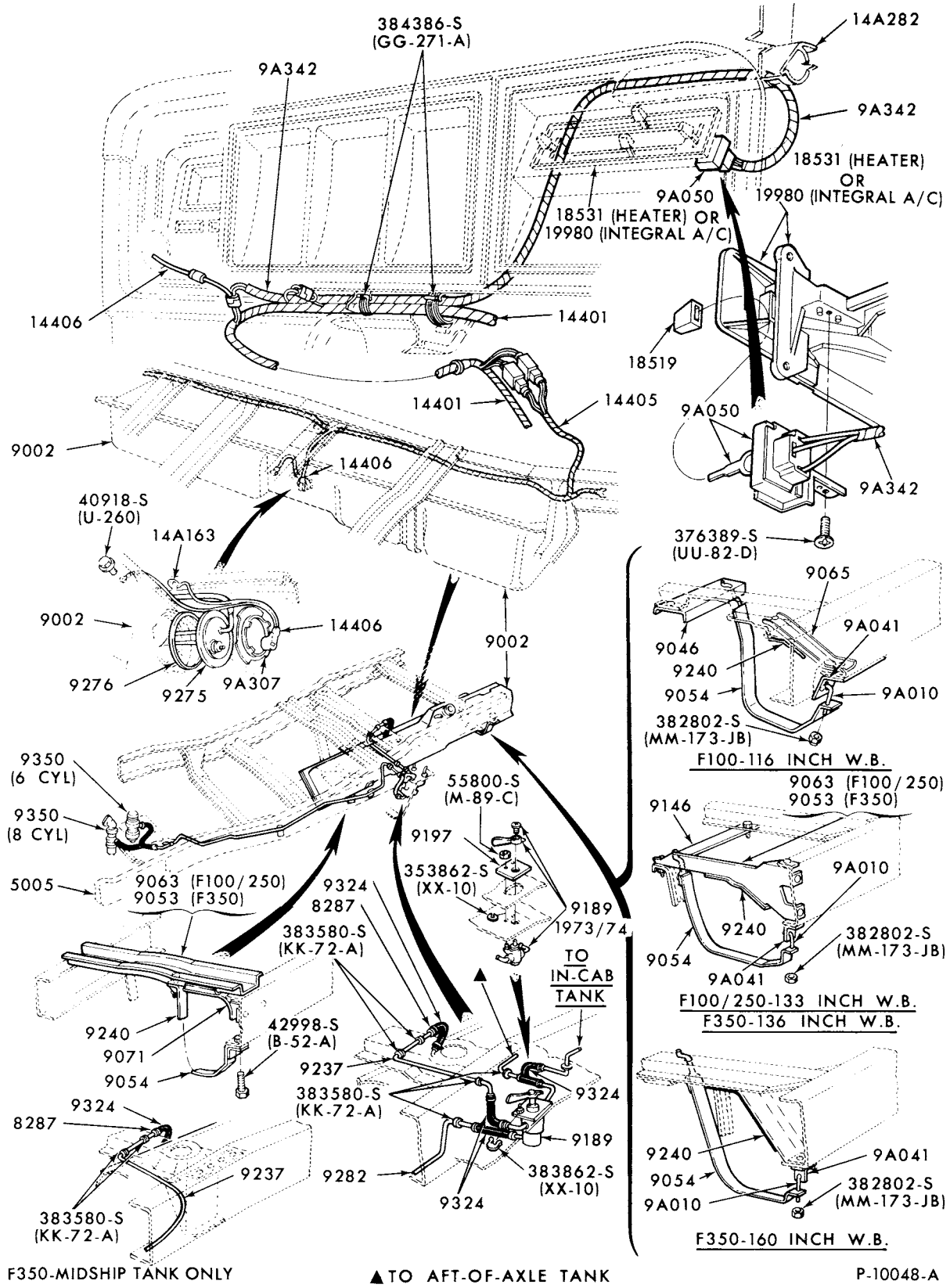

FUEL SYSTEM and RELATED PARTS

1973/74 F100/350 (EXC. SUPER CAB)--2/W/D with MIDSHIP TANK

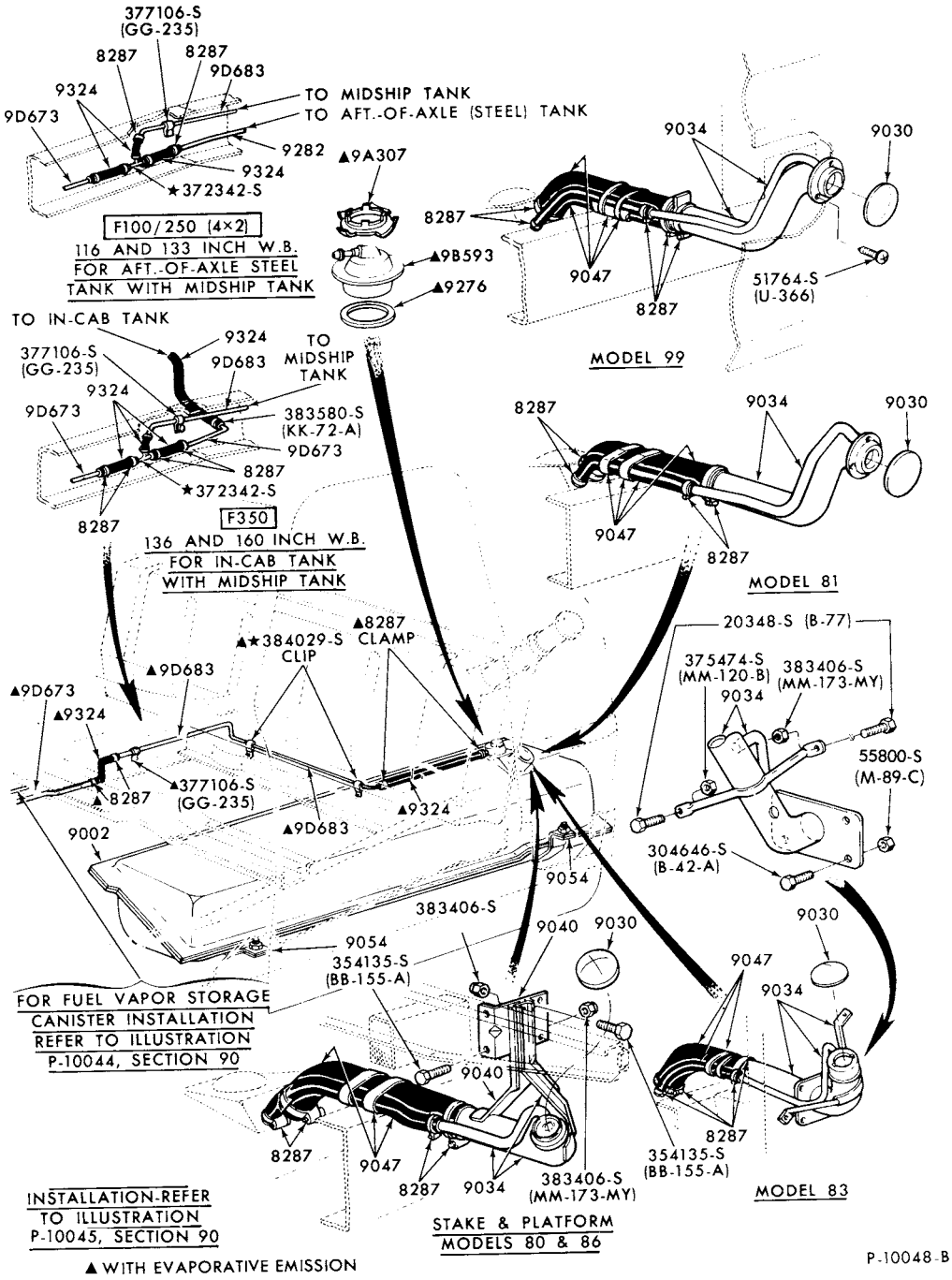

FUEL SYSTEM and RELATED PARTS
1973/ F100/350 (EXC. SUPER CAB)--2/W/D with MIDSHIP TANK

COPYRIGHT © 1979 FORD MOTOR COMPANY—DEARBORN, MICHIGAN

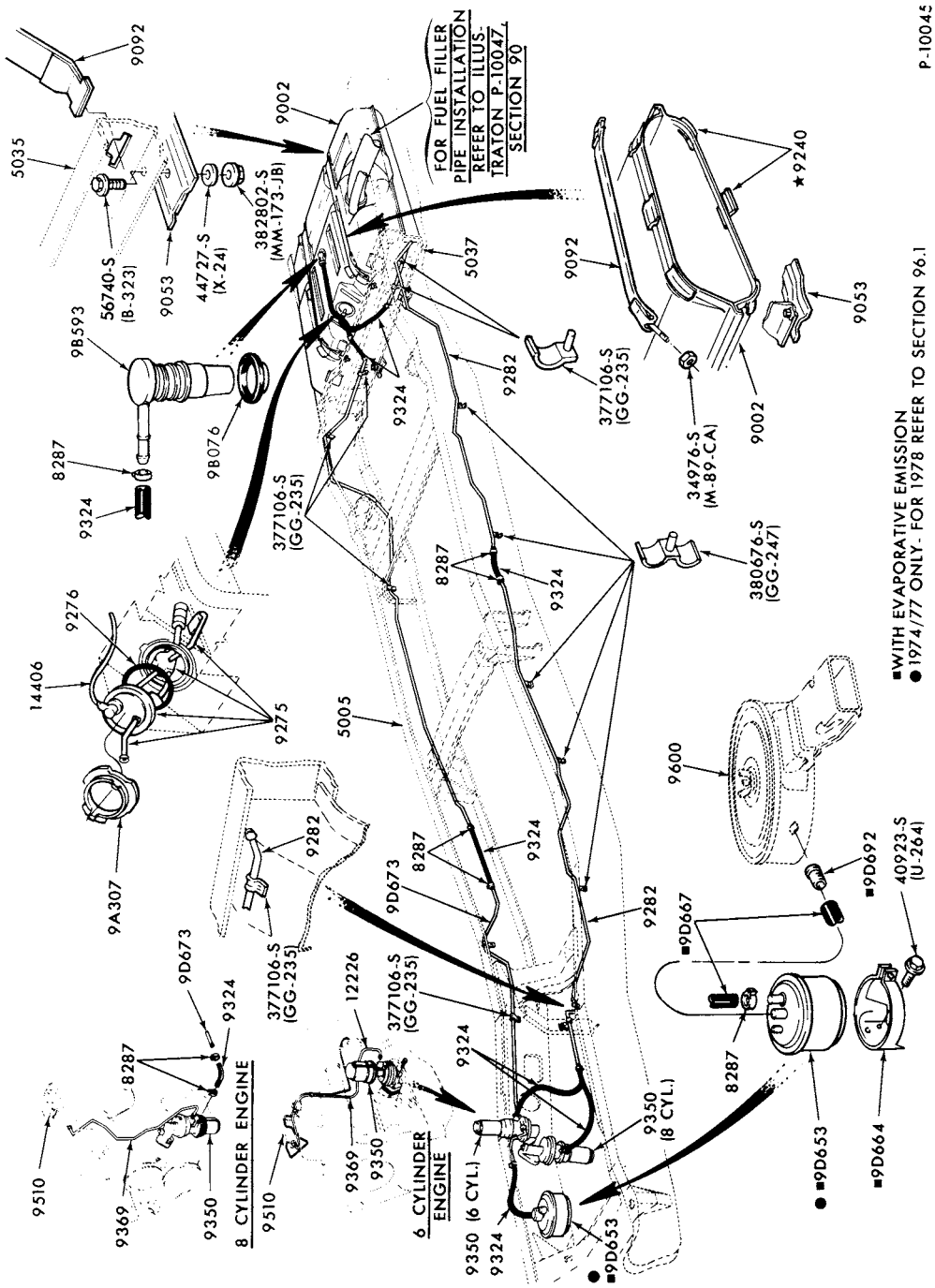

FUEL SYSTEM and RELATED PARTS
1973/74 F100--2/W/D, 4/W/D and F250--2/W/D-with AFT AXLE TANK
1975/ F100/350--with AFT AXLE TANK

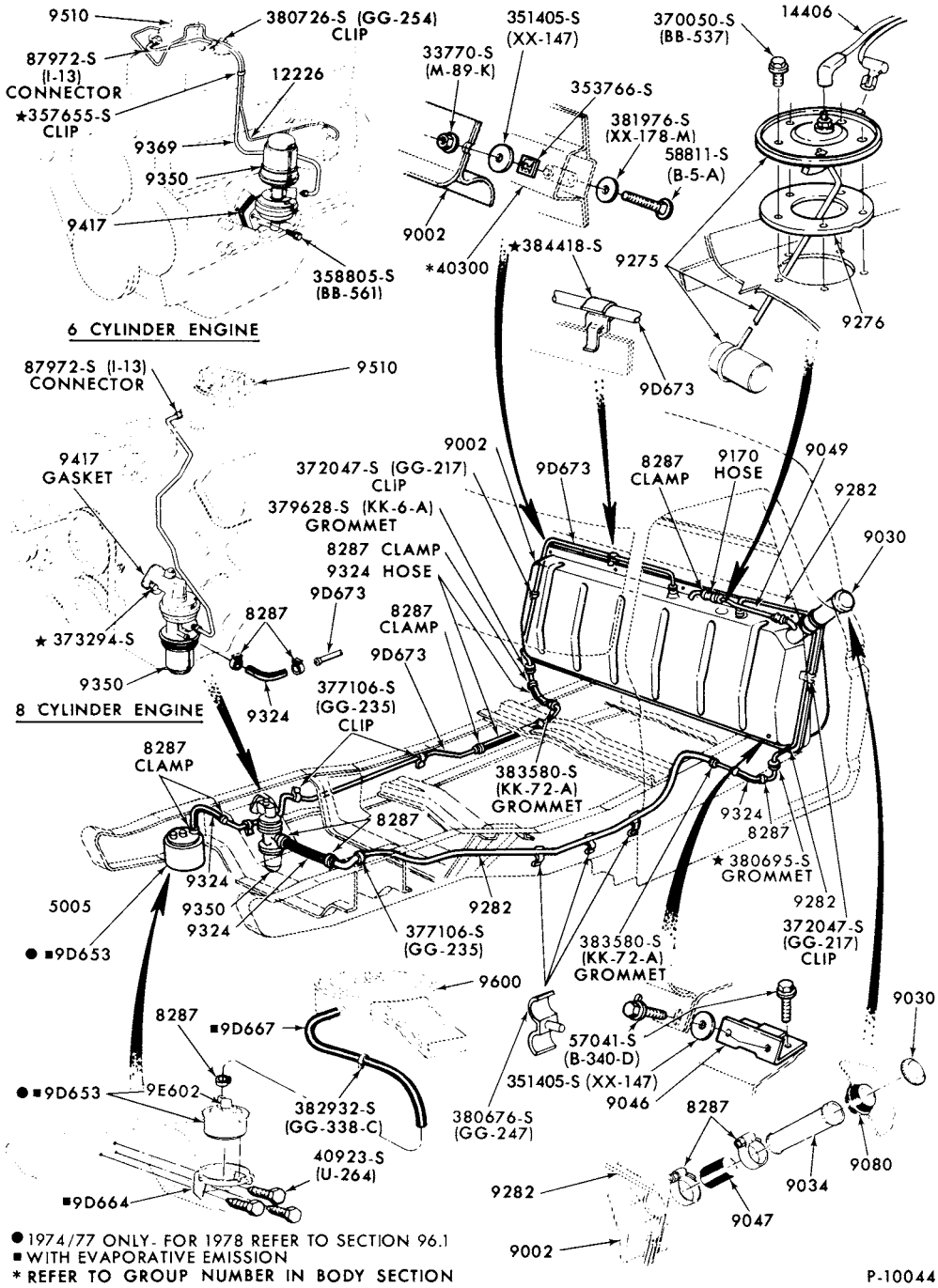

FUEL SYSTEM and RELATED PARTS
1973 F250--4/W/D with IN-CAB TANK and F350--w/IN-CAB TANK
1974/ F100/350 (EXC. w/CREW CAB)--w/IN-CAB TANK

COPYRIGHT © 1979 FORD MOTOR COMPANY, DEARBORN, MICHIGAN

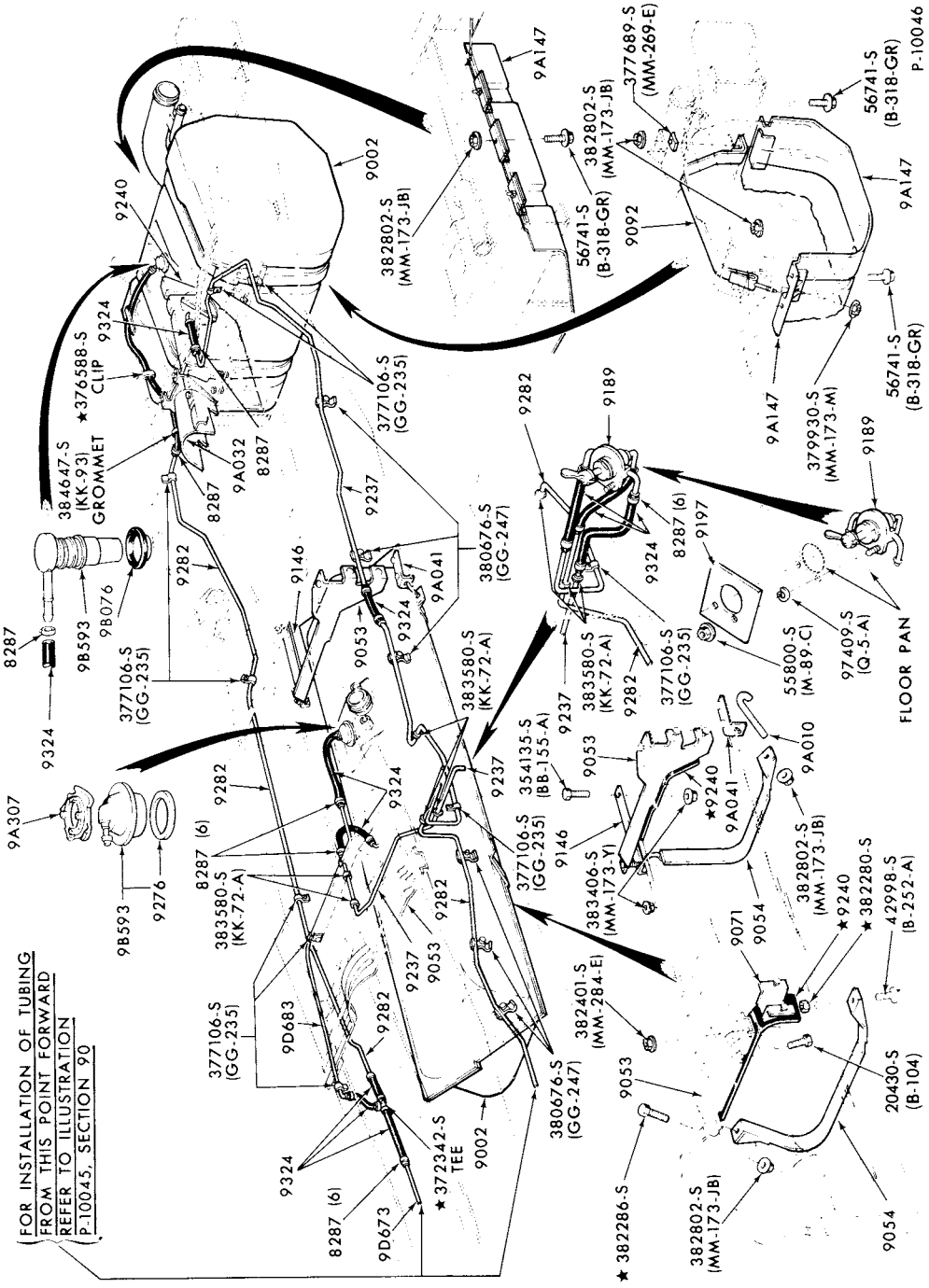

FUEL SYSTEM and RELATED PARTS

1973/ F350 (SUPER CAMPER)--w/AFT AXLE PLASTIC TANK and MIDSHIP TANK

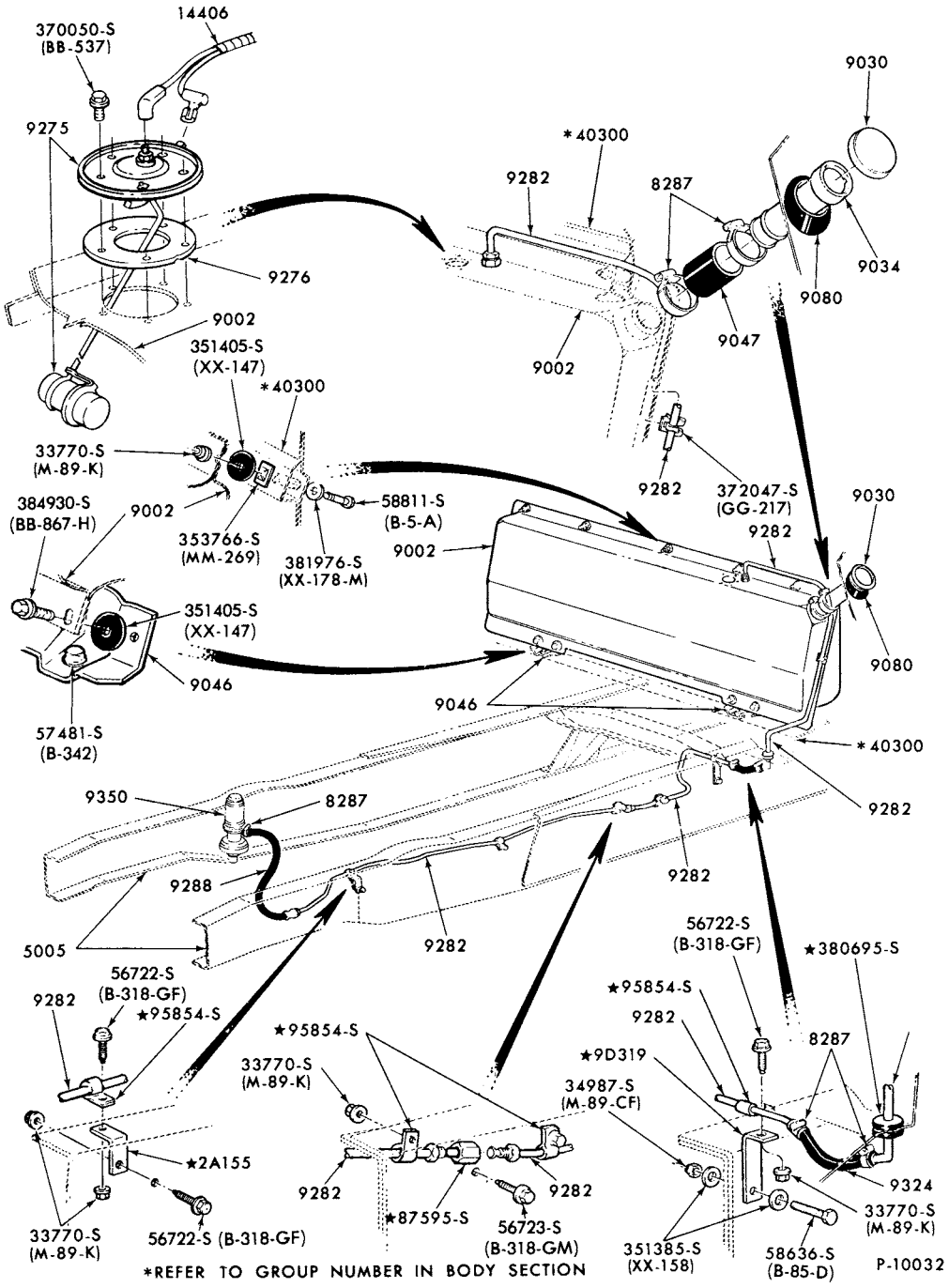

*REFER TO GROUP NUMBER IN BODY SECTION

FUEL SYSTEM and RELATED PARTS
1973/77 F500--w/IN-CAB TANK and w/o EVAPORATIVE EMISSION

COPYRIGHT © 1979 FORD MOTOR COMPANY - DEARBORN, MICHIGAN

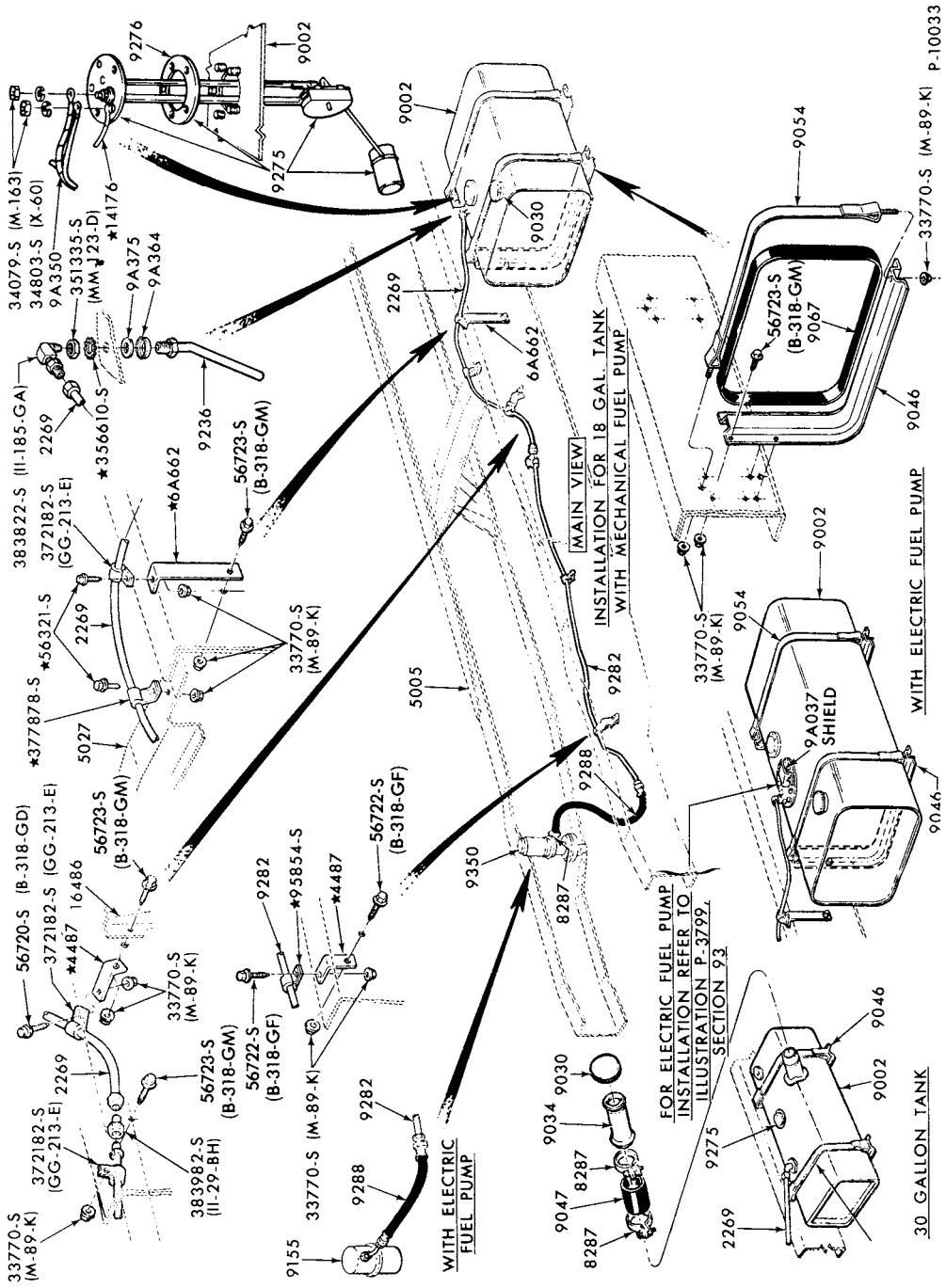

FUEL SYSTEM and RELATED PARTS

1973/77 F500--w/18 and 30 GALLON FRAME MOUNTED RECTANGULAR TANKS and w/o EVAPORATIVE EMISSION

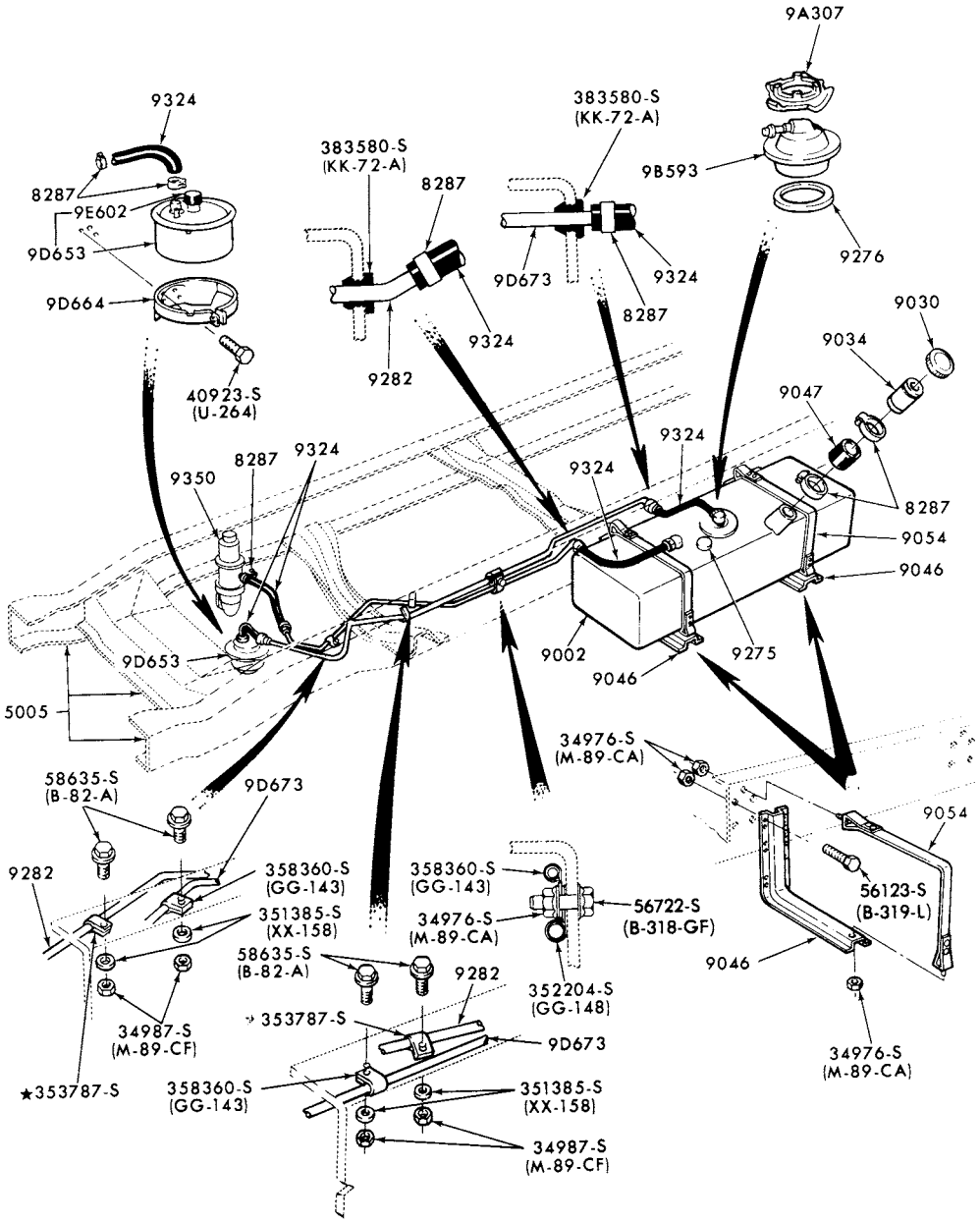

P-10053

FUEL SYSTEM and RELATED PARTS

1973 P350/500--w/30 GALLON RECTANGULAR TANK and EVAPORATIVE EMISSION

COPYRIGHT © 1979 FORD MOTOR COMPANY, DEARBORN, MICHIGAN

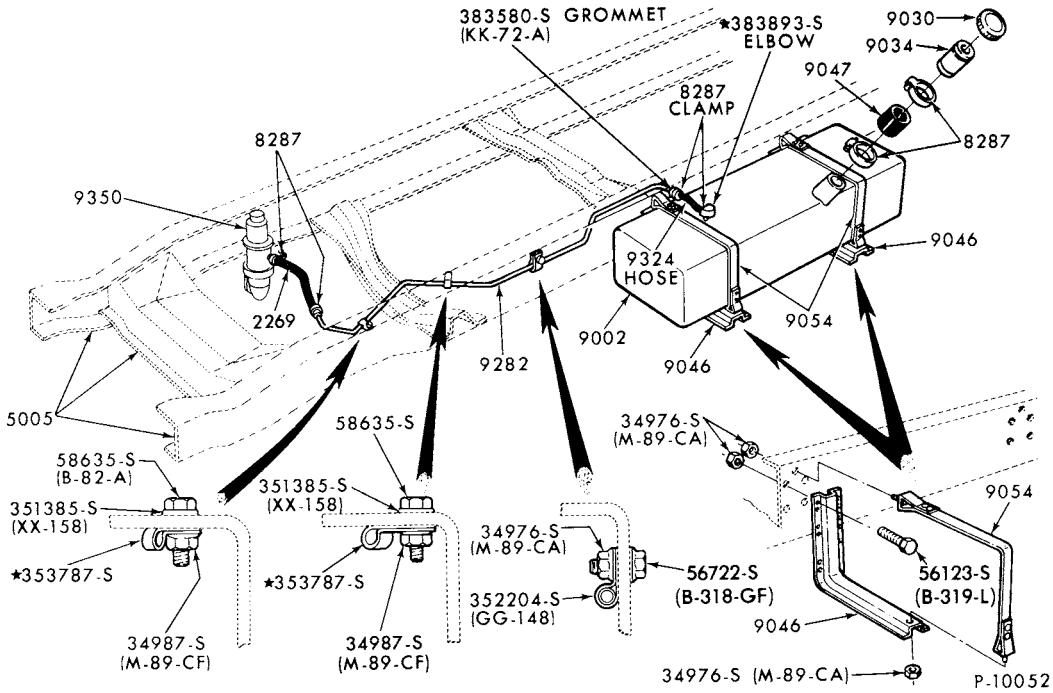

FUEL SYSTEM and RELATED PARTS
1973/77 P350/500--w/30 GALLON FRAME MOUNTED RECTANGULAR TANK
and w/o EVAPORATIVE EMISSION

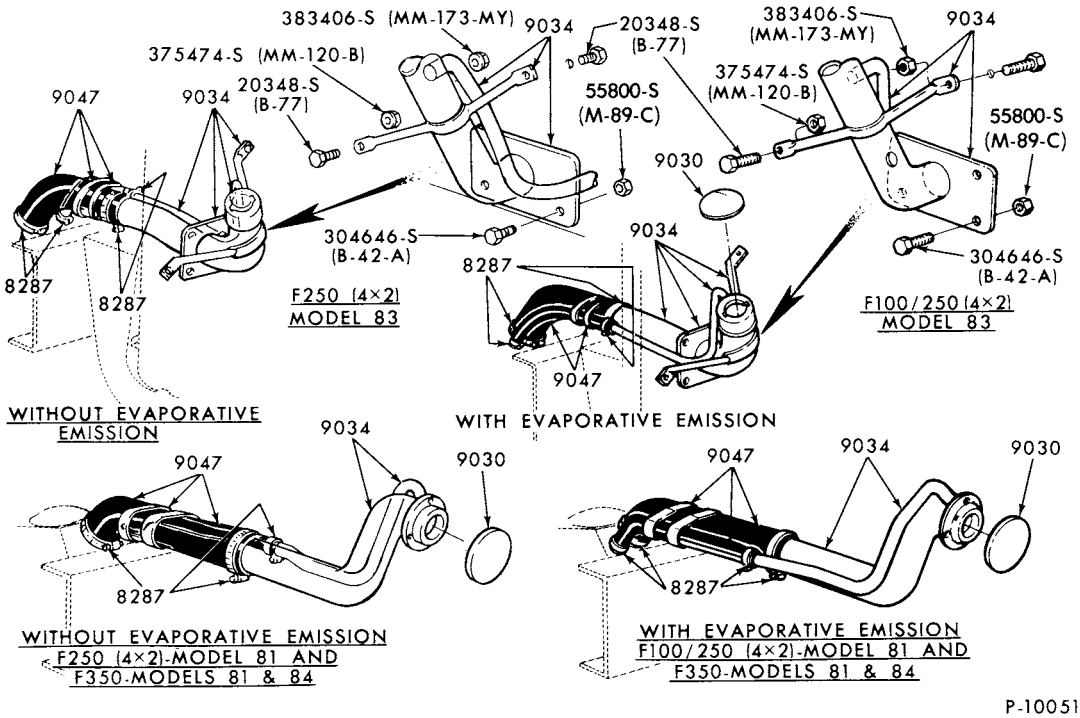

FUEL FILLER PIPE INSTALLATION
1973/ F100/350 (81 and 83)--2/W/D with MIDSHIP TANK

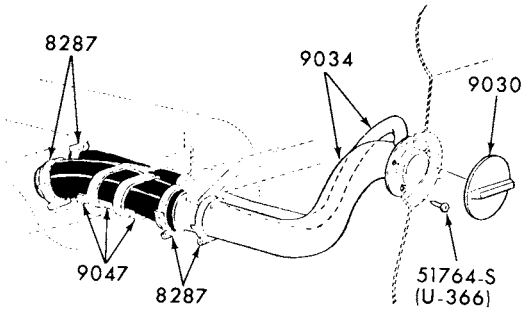

WITHOUT EVAPORATIVE EMISSION
F250 (4×2) - MODEL 99

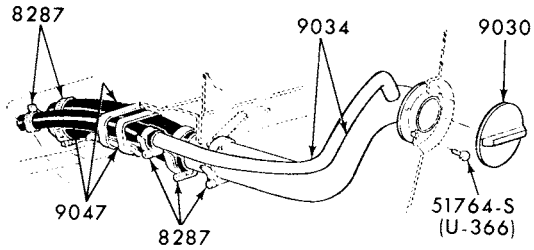

WITH EVAPORATIVE EMISSION
F100 (4×2) (4×4), F250 (4×2) - MODEL 99

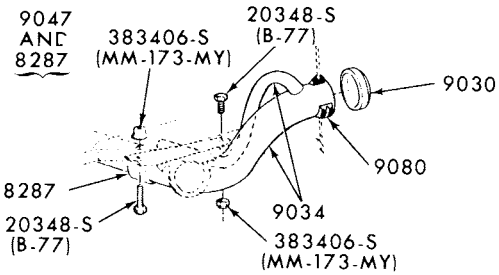

WITHOUT EVAPORATIVE EMISSION
F250 (4×2) - MODEL 83

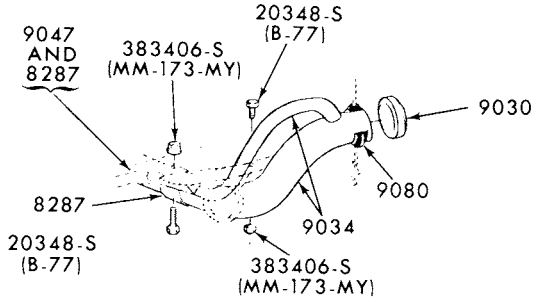

WITH EVAPORATIVE EMISSION
F100 (4×2) (4×4), F250 (4×2) - MODEL 83

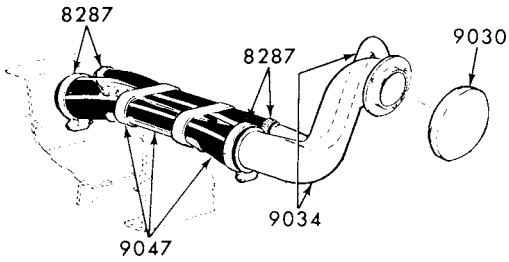

WITHOUT EVAPORATIVE EMISSION
F250 (4×2) - MODEL 81

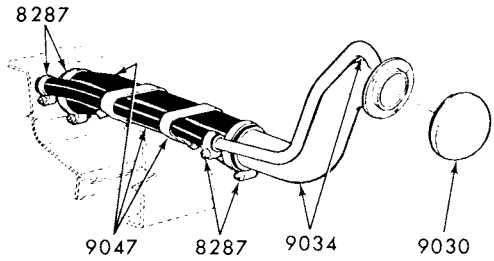

WITH EVAPORATIVE EMISSION
F100 (4×2) (4×4), F250 (4×2)-MODEL 81

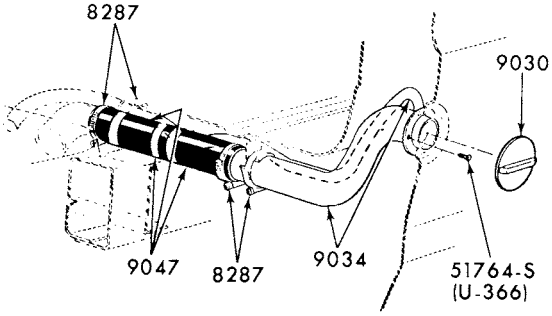

WITHOUT EVAPORATIVE EMISSION
F350-CAMPER SPECIAL

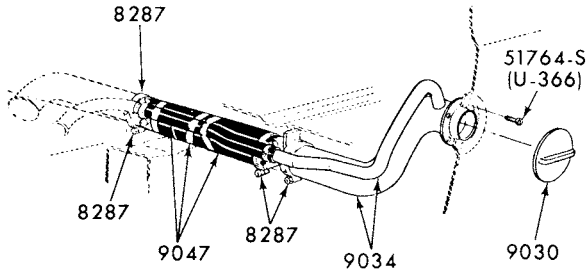

WITH EVAPORATIVE EMISSION
F350-CAMPER SPECIAL

P-10047

FUEL FILLER PIPE INSTALLATION
1973/ F100/350 (81, 83 and 99)--w/AFT AXLE TANK

COPYRIGHT © 1979 FORD MOTOR COMPANY DEARBORN, MICHIGAN

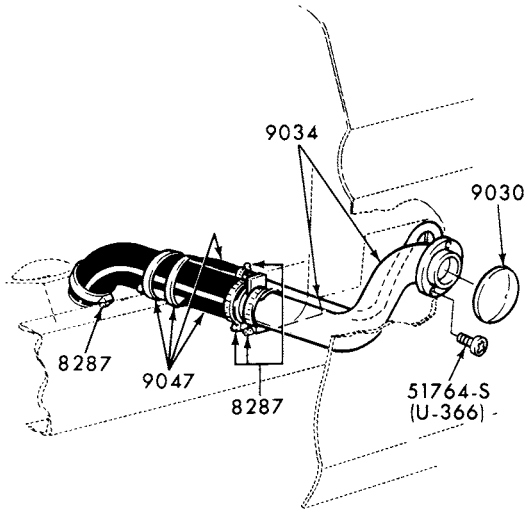

WITHOUT EVAPORATIVE EMISSION
F250 (4×2)-MODEL 99

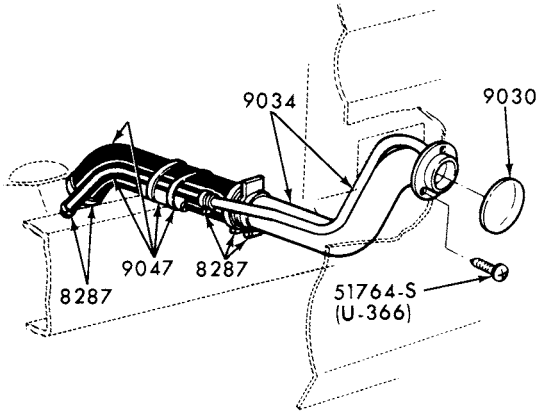

WITH EVAPORATIVE EMISSION
F100/250 (4×2)-MODEL 99

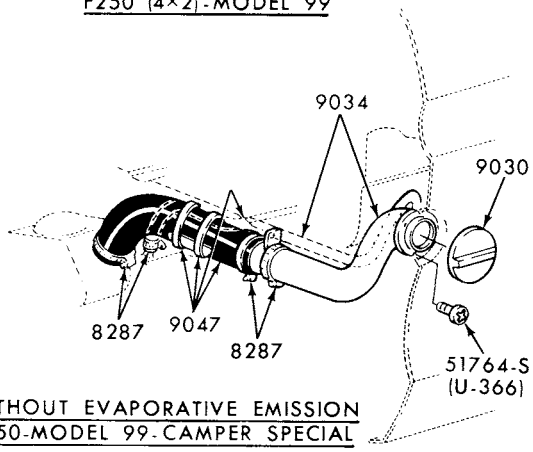

WITHOUT EVAPORATIVE EMISSION
F350-MODEL 99-CAMPER SPECIAL

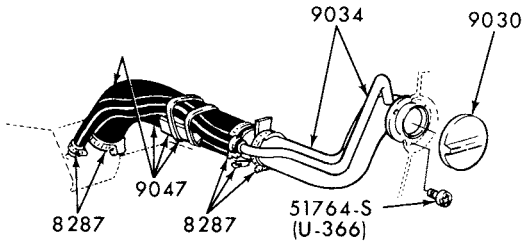

WITH EVAPORATIVE EMISSION
F350-MODEL 99-CAMPER SPECIAL

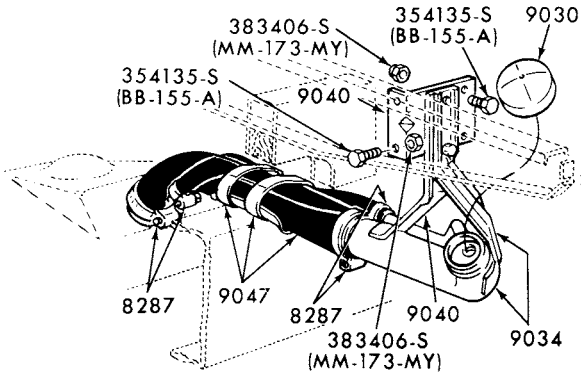

WITHOUT EVAPORATIVE EMISSION
F350-MODELS 80 AND 86
(STAKE-PLATFORM)

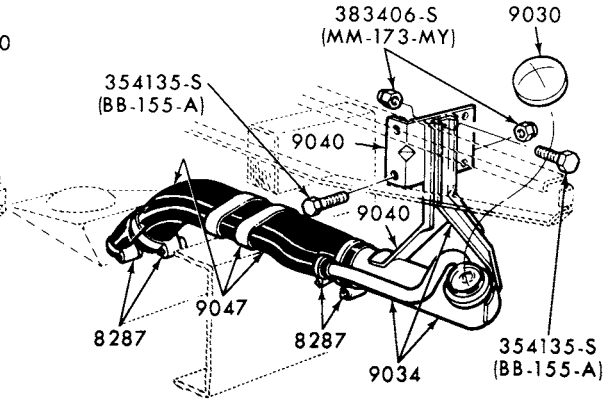

WITH EVAPORATIVE EMISSION
F350-MODELS 80 AND 86
(STAKE-PLATFORM)

P-10050

FUEL FILLER PIPE INSTALLATION
1973/ F100/350 (80, 86 and 99)--2/W/D with MIDSHIP TANK

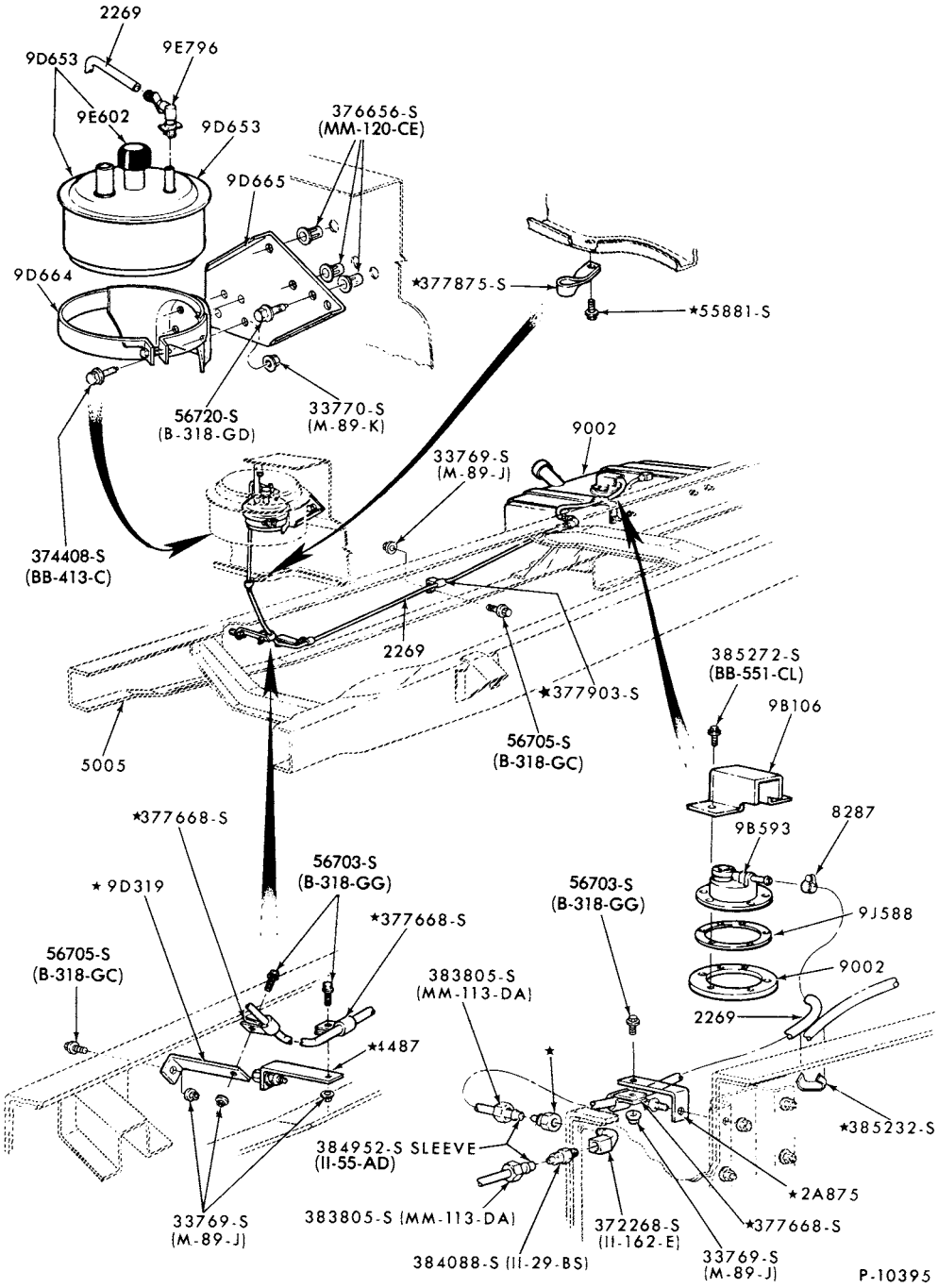

FUEL SYSTEM and RELATED PARTS
1973/74 B500--w/30 GALLON FRAME MOUNTED RECTANGULAR TANK and w/EVAPORATIVE EMISSION

COPYRIGHT © 1979 FORD MOTOR COMPANY DEARBORN, MICHIGAN

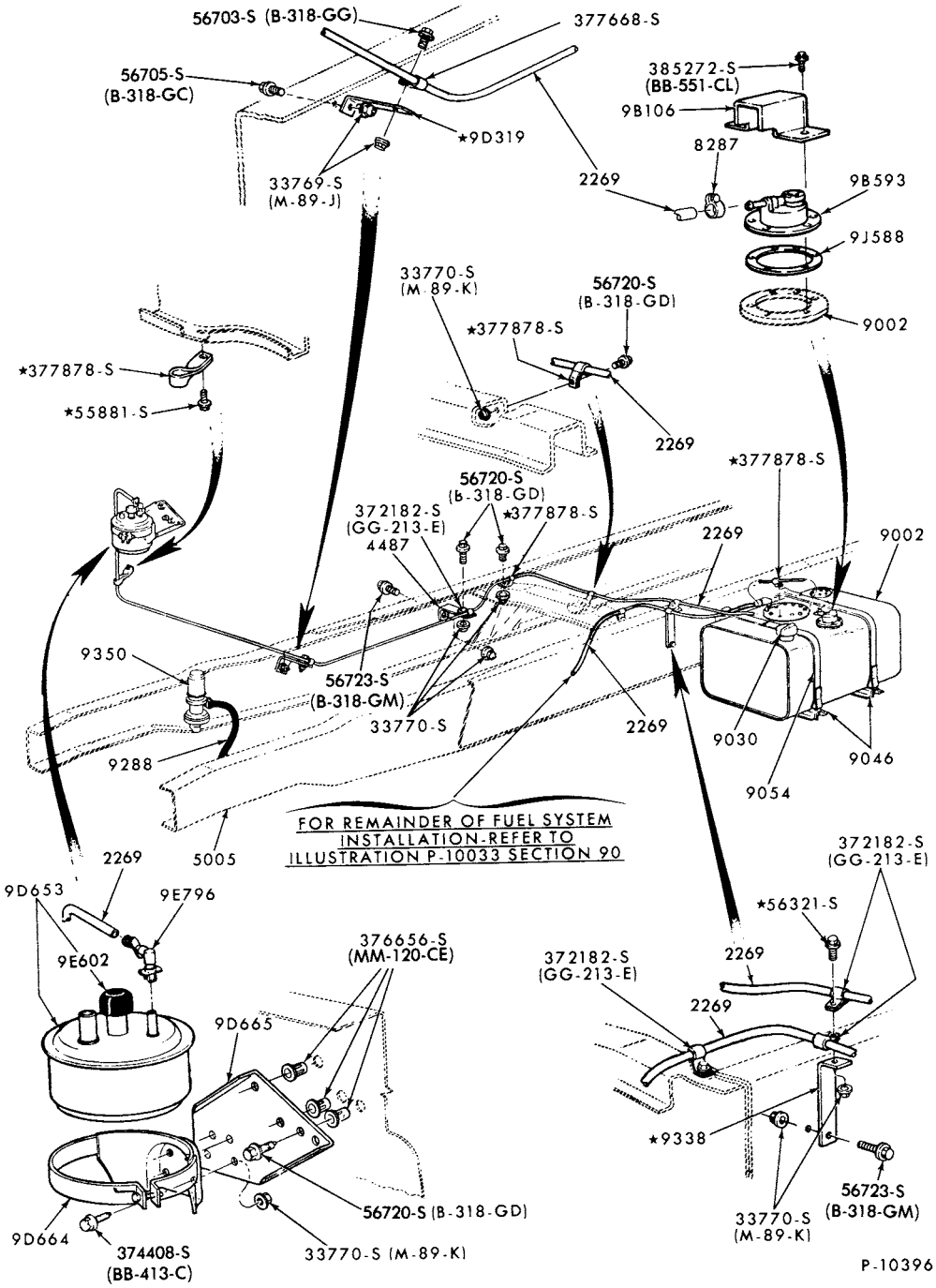

FUEL SYSTEM and RELATED PARTS
1973/77 F500--w/18 and 30 GALLON FRAME MOUNTED RECTANGULAR TANKS and w/EVAPORATIVE EMISSION

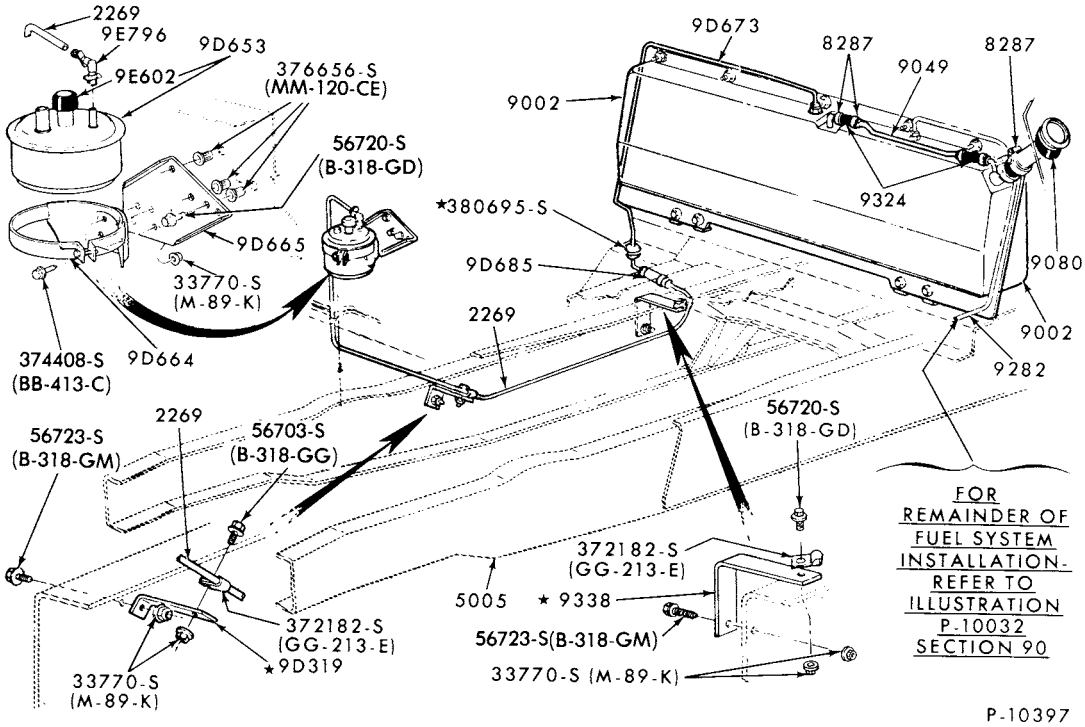

FUEL SYSTEM and RELATED PARTS
1973/77 F500--w/IN-CAB TANK and w/EVAPORATIVE EMISSION

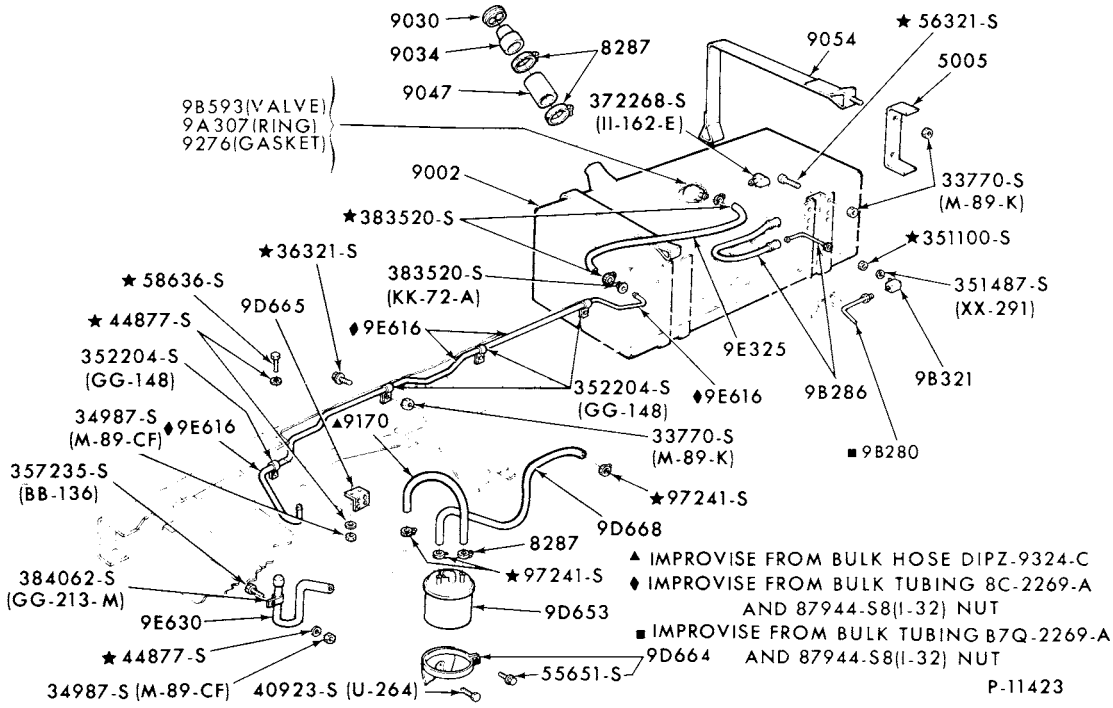

FUEL SYSTEM and RELATED PARTS
1973/76 M450/500--w/30 GALLON FRAME MOUNTED RECTANGULAR TANK and w/EVAPORATIVE EMISSION

COPYRIGHT © 1979 FORD MOTOR COMPANY - DEARBORN, MICHIGAN

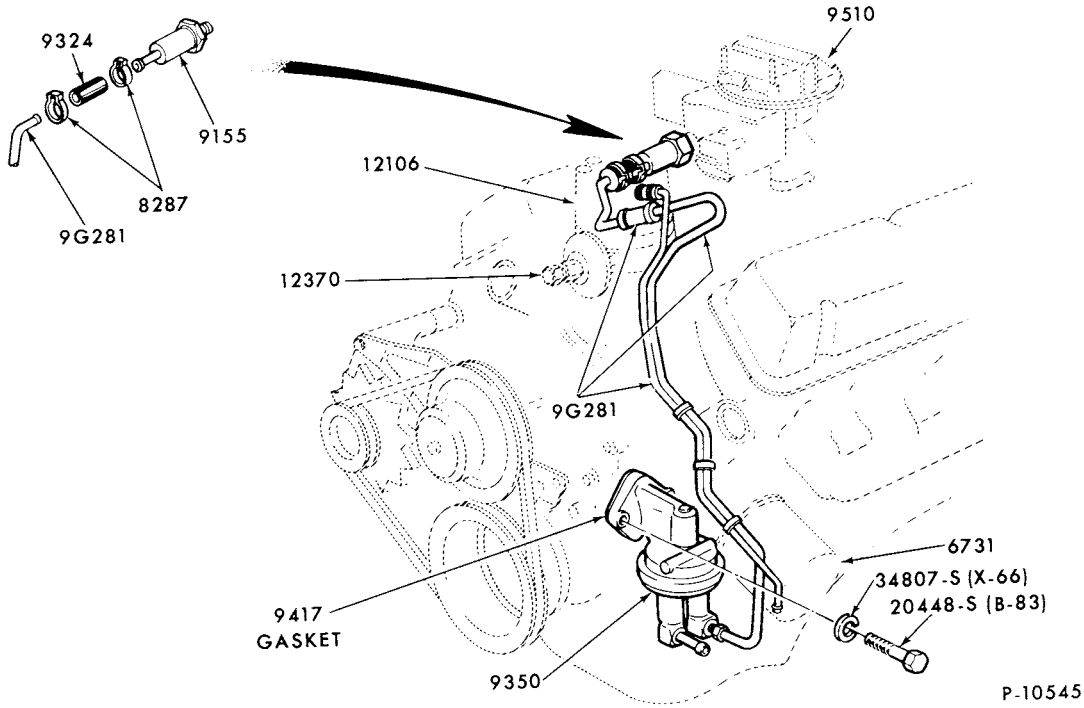

FUEL PUMP, FUEL LINE and IN-LINE FUEL FILTER INSTALLATION - TYPICAL
1973/ E100/350, F100/150-8 CYL. 302

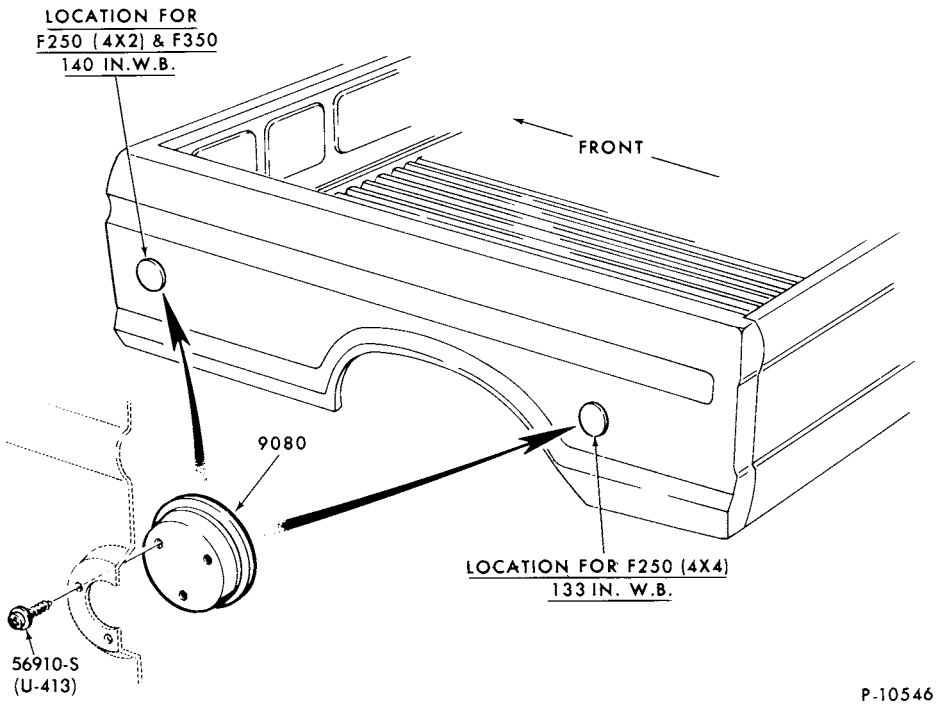

FUEL TANK FILLER OPENING COVER
1973/ F250/350

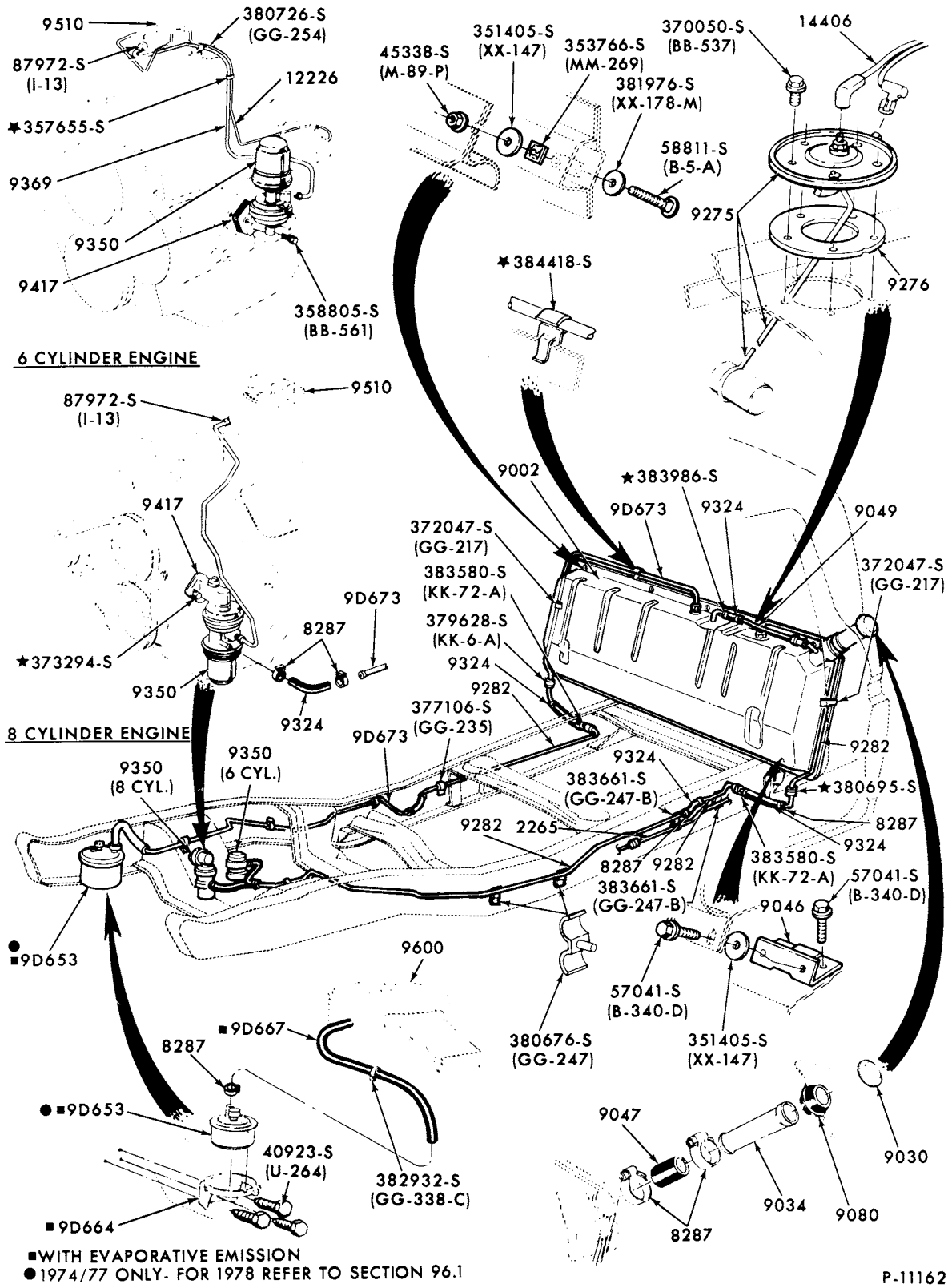

FUEL SYSTEM and RELATED PARTS
1974/ F250/350 (CREW CAB)--W/IN-CAB TANK

COPYRIGHT © 1979 FORD MOTOR COMPANY - DEARBORN, MICHIGAN

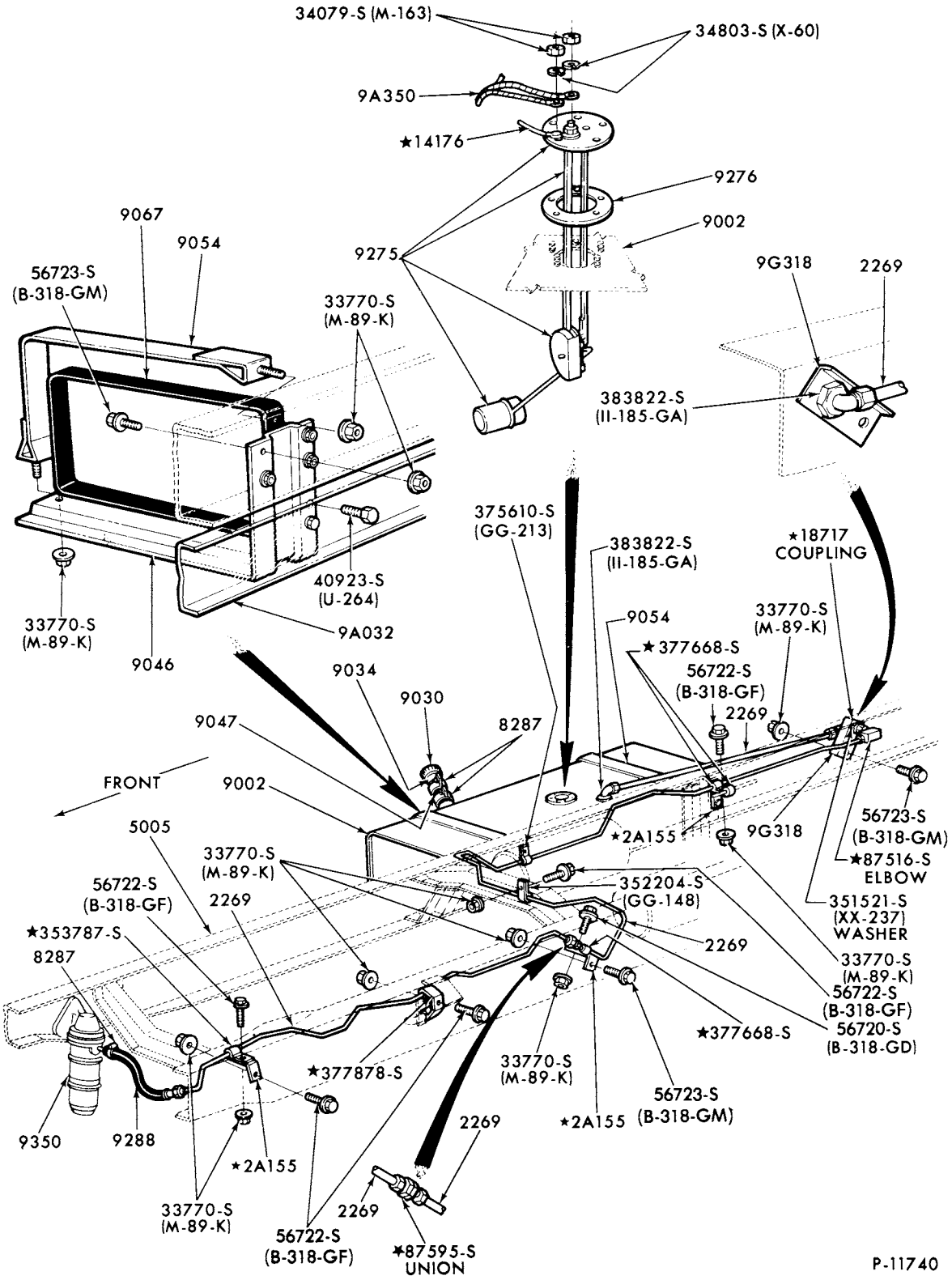

FUEL SYSTEM and RELATED PARTS
1975/77 B500--w/30 GALLON FRAME MOUNTED RECTANGULAR TANK-w/o EVAPORATIVE EMISSION

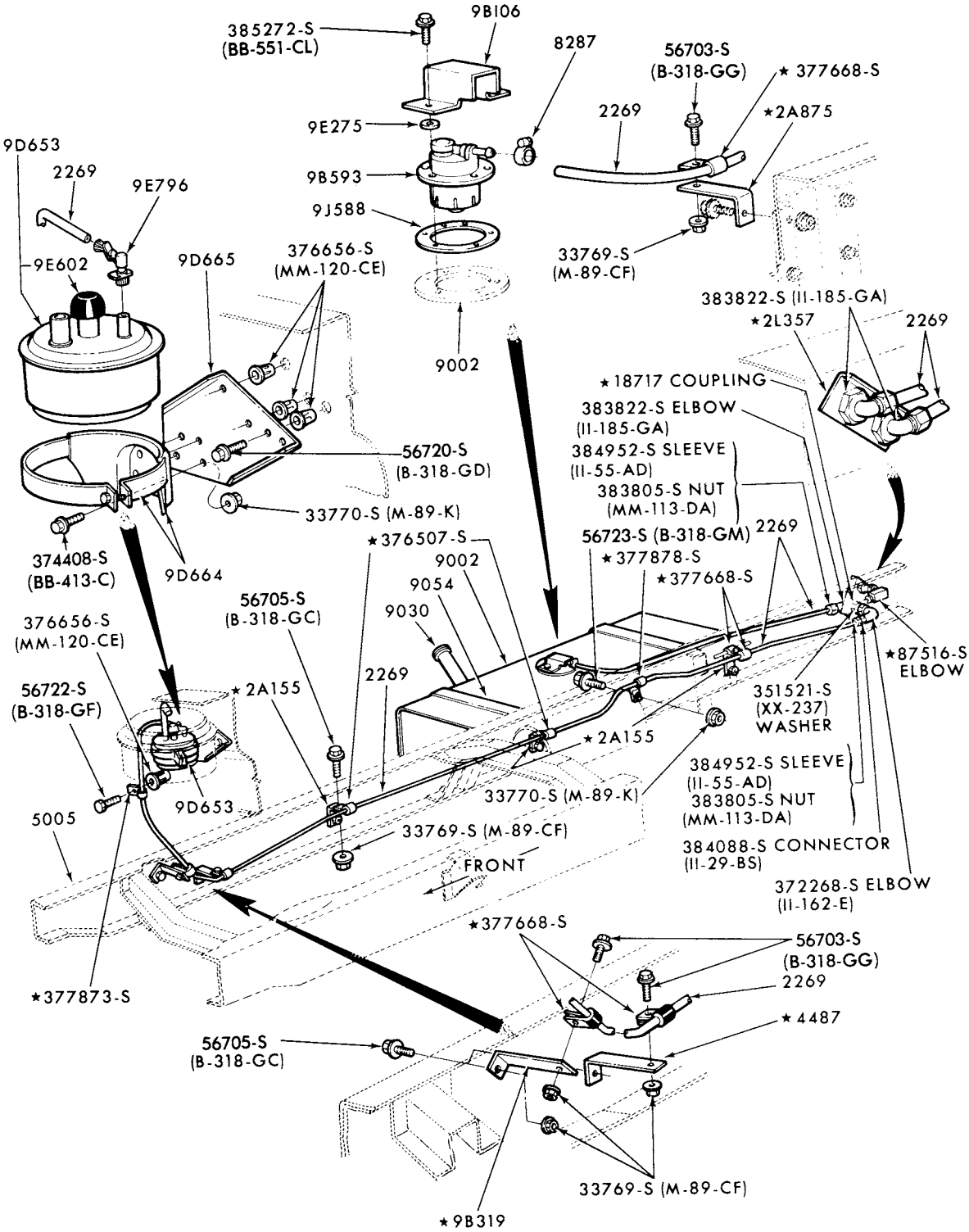

P-11741

FUEL SYSTEM and RELATED PARTS
1975/77 B500--GAS and w/30 GALLON FRAME MOUNTED RECTANGULAR TANK-
w/EVAPORATIVE EMISSION

COPYRIGHT © 1979 -FORD MOTOR-DEARBORN, MICHIGAN COMPANY

1973/79
TRUCK SERIES 100/500

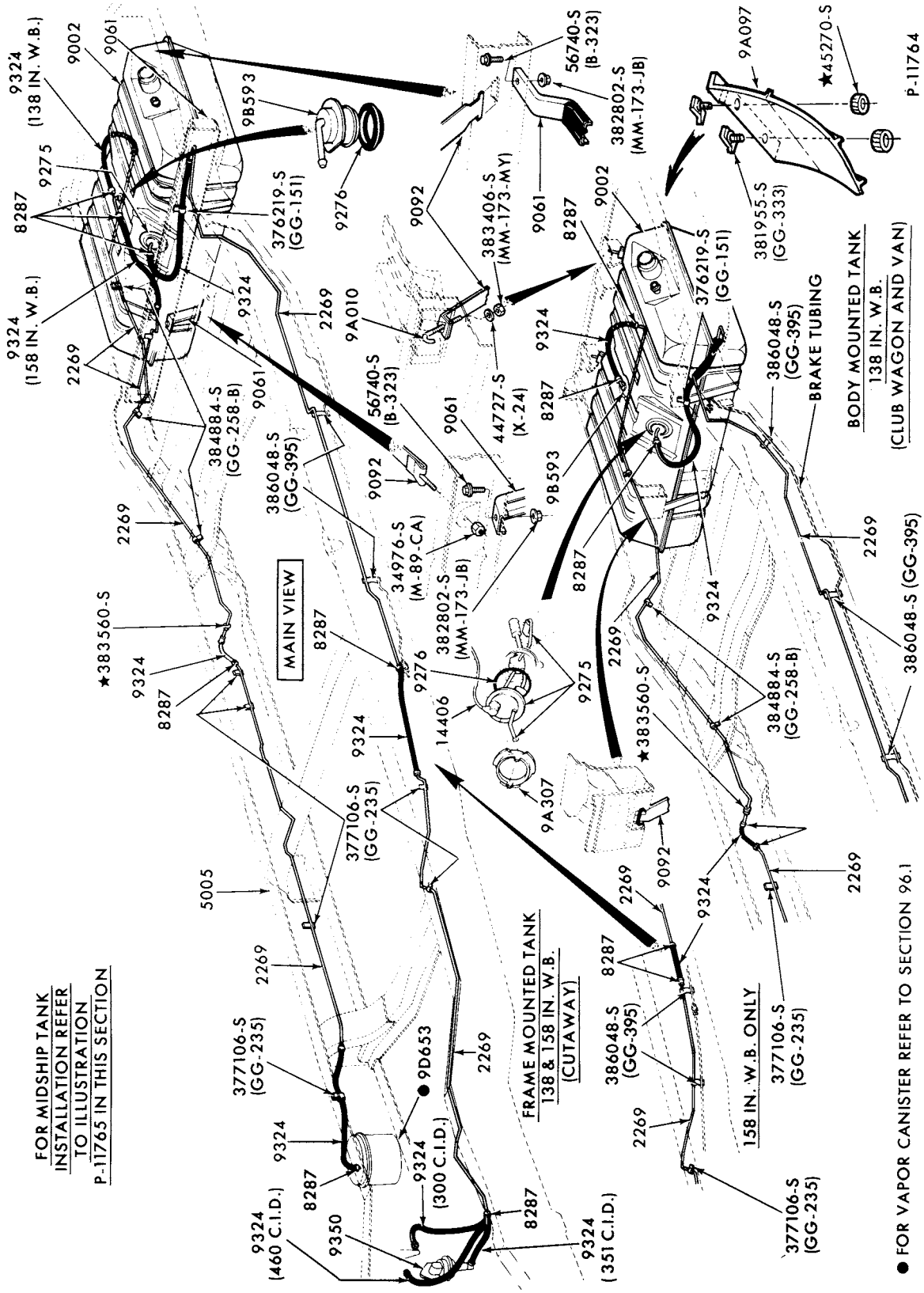

FUEL SYSTEM and RELATED PARTS

1975/ E100/350--with AFT AXLE TANK and EVAPORATIVE EMISSION

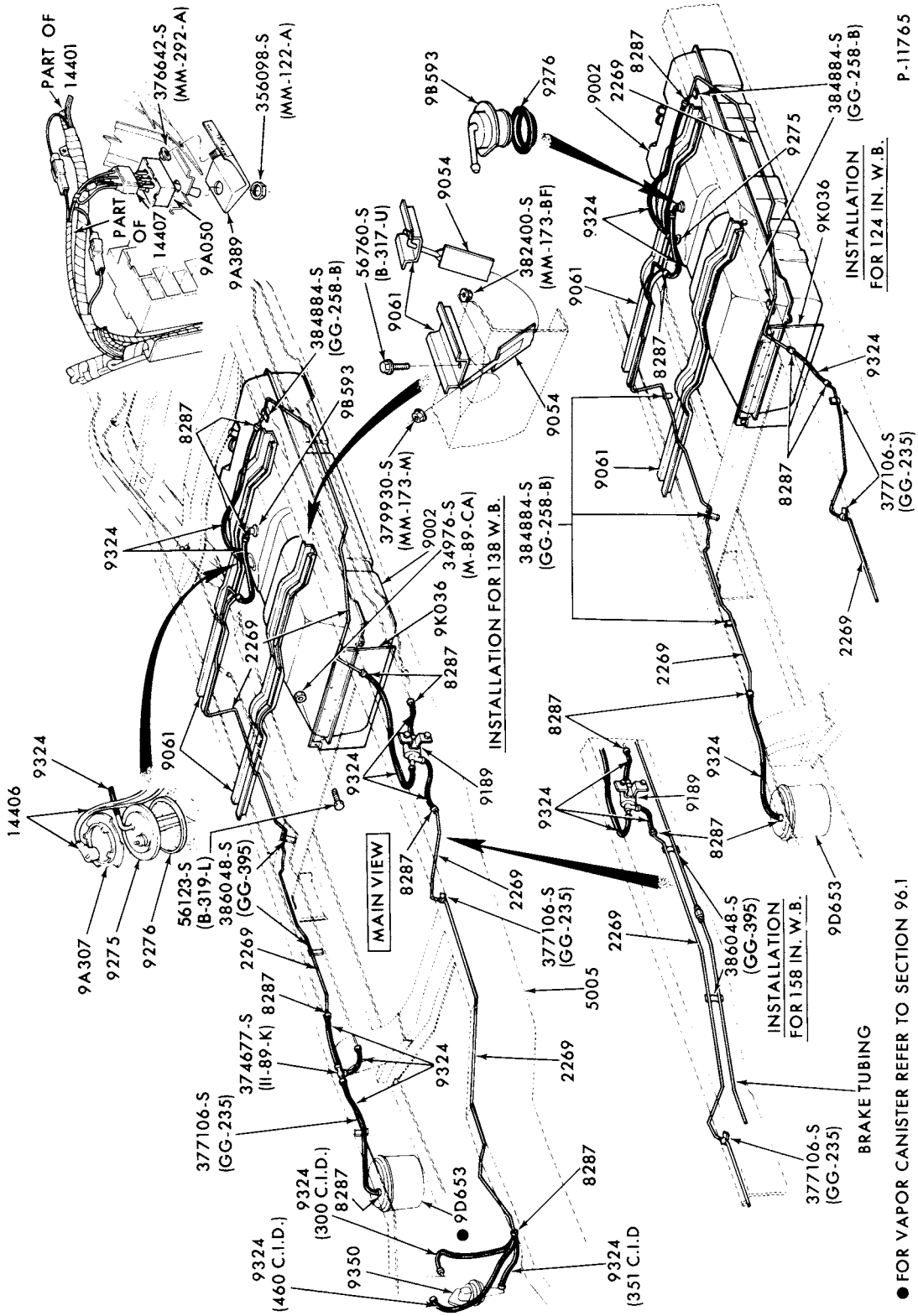

FUEL SYSTEM and RELATED PARTS
1975/ E100/350--with MIDSHIP TANK and EVAPORATIVE EMISSION

COPYRIGHT © 1979 --FORD MOTOR-DEARBORN, MICHIGAN
COMPANY

1973/79 TRUCK SERIES 100/500

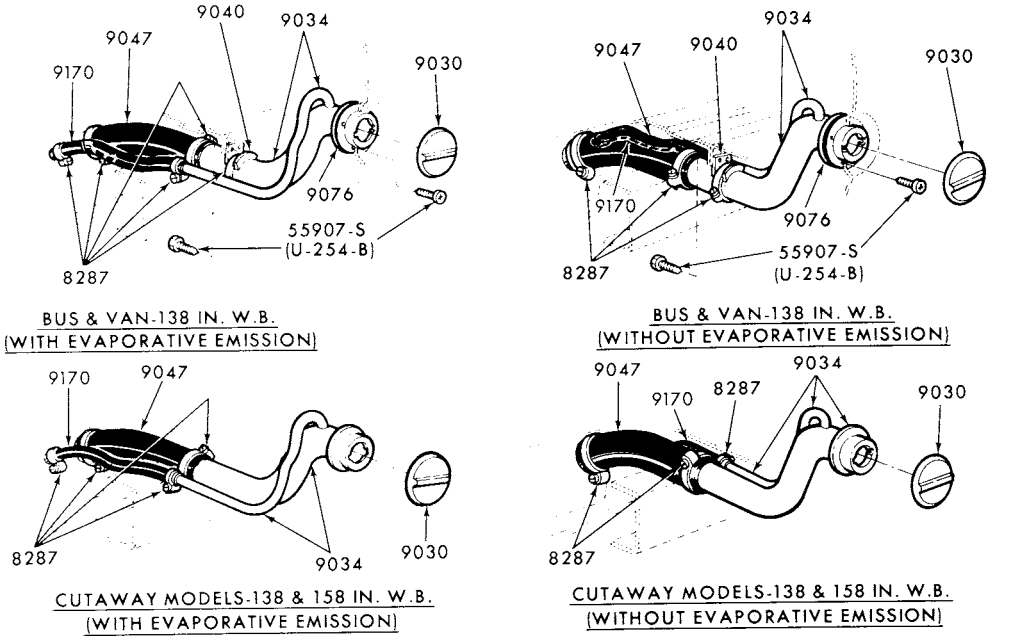

P-11738

FUEL FILLER PIPE INSTALLATION
1975/ E100/350--with AFT AXLE TANK

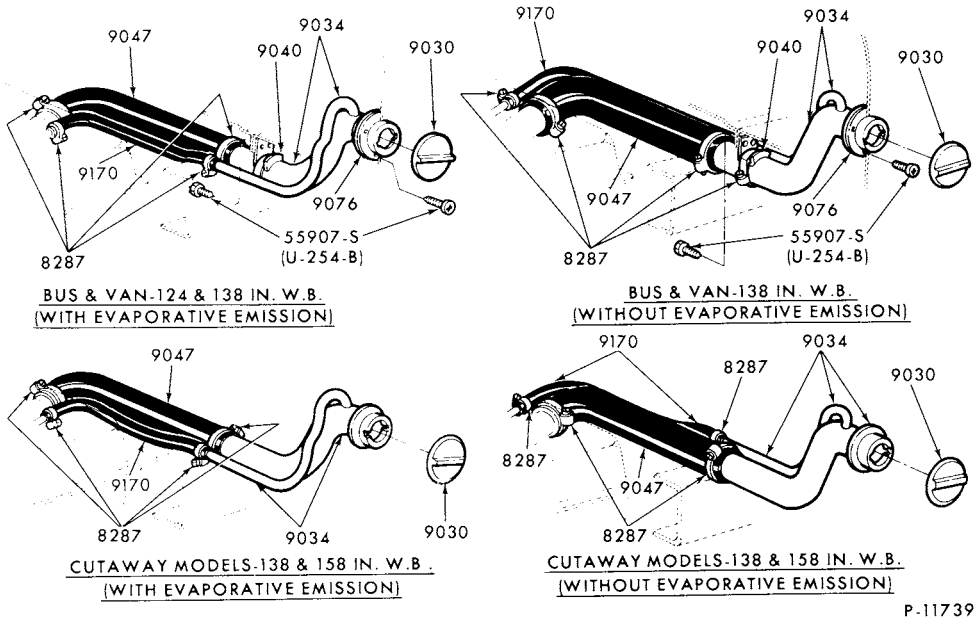

P-11739

FUEL FILLER PIPE INSTALLATION
1975/ E100/350--with MIDSHIP TANK

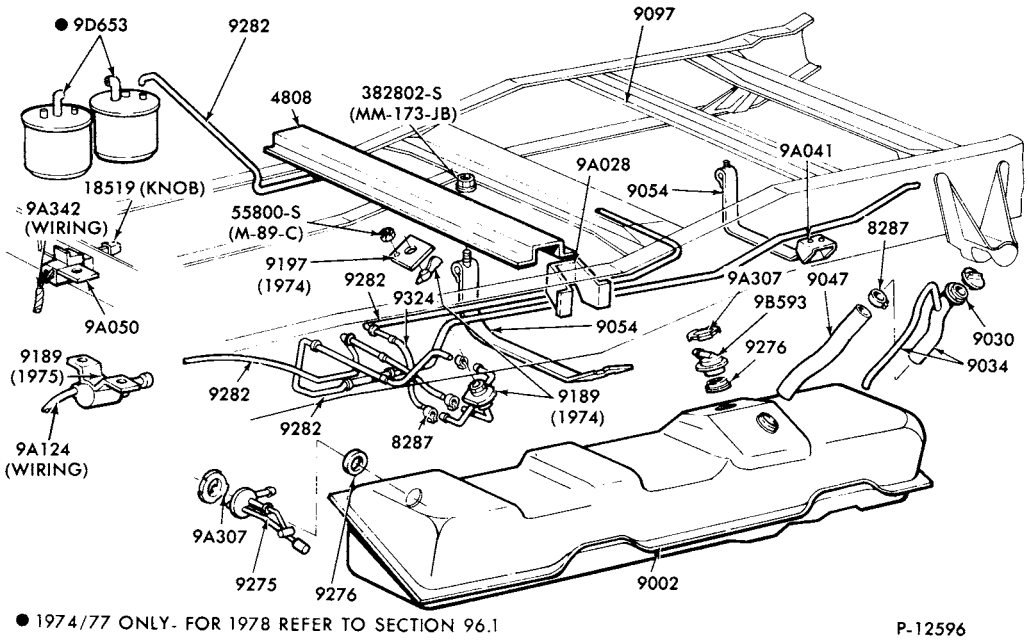

FUEL SYSTEM and RELATED PARTS
1974/ F100/350 (SUPER CAB)--2/W/D with MIDSHIP TANK

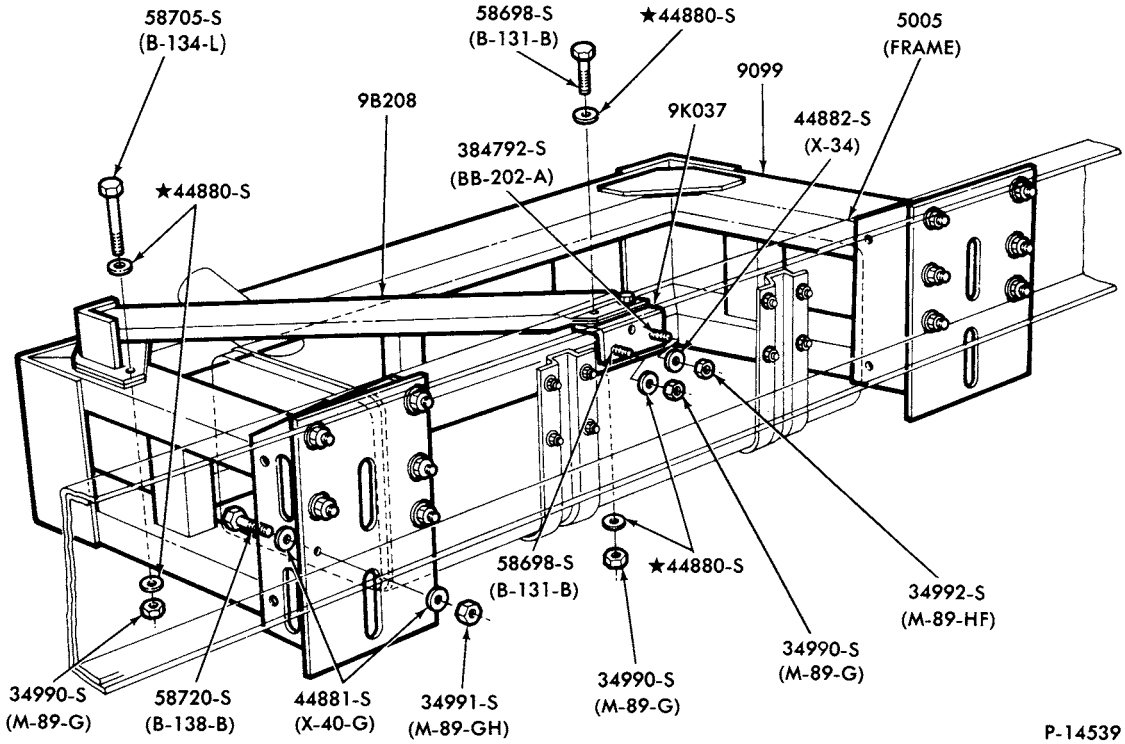

FUEL TANK - GUARD
1976/77 B500--GAS 30 GALLON TANKS

COPYRIGHT © 1979 FORD MOTOR COMPANY, DEARBORN, MICHIGAN

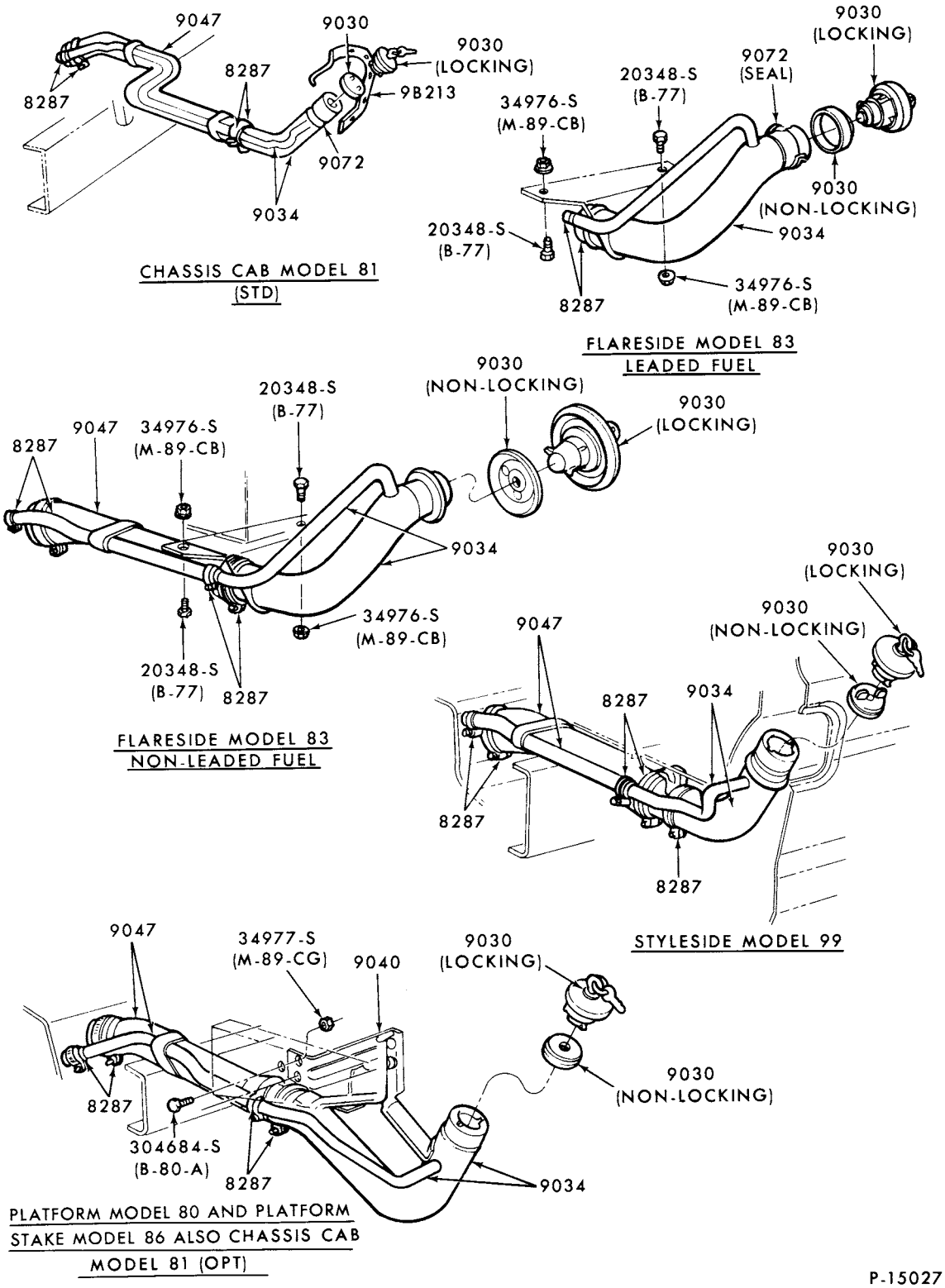

FUEL FILLER PIPE INSTALLATION
1978/ F150/350--with AFT AXLE TANK

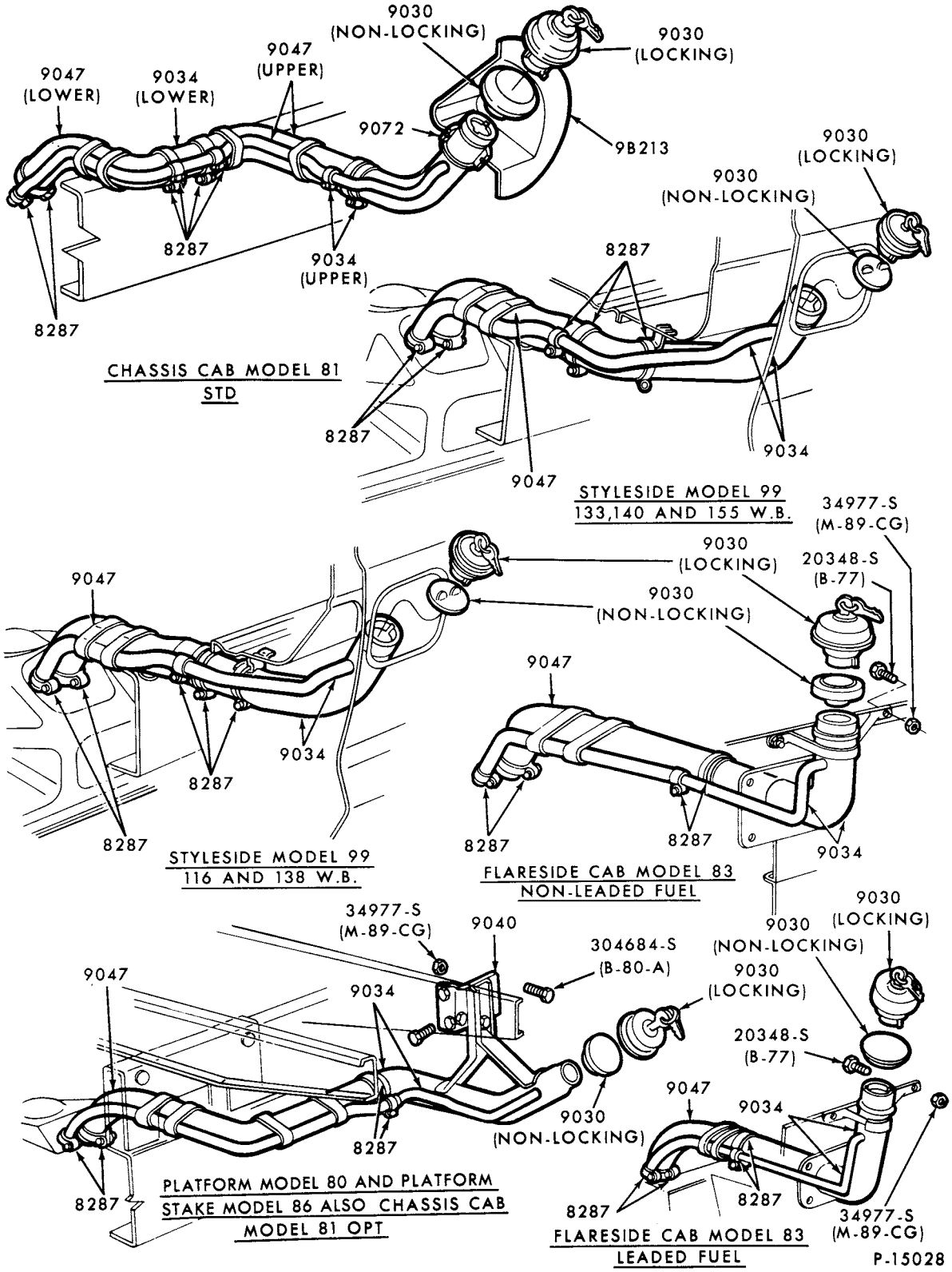

FUEL FILLER PIPE INSTALLATION
1978/ F150/350--with MIDSHIP TANK

COPYRIGHT © 1979 FORD MOTOR COMPANY—DEARBORN, MICHIGAN

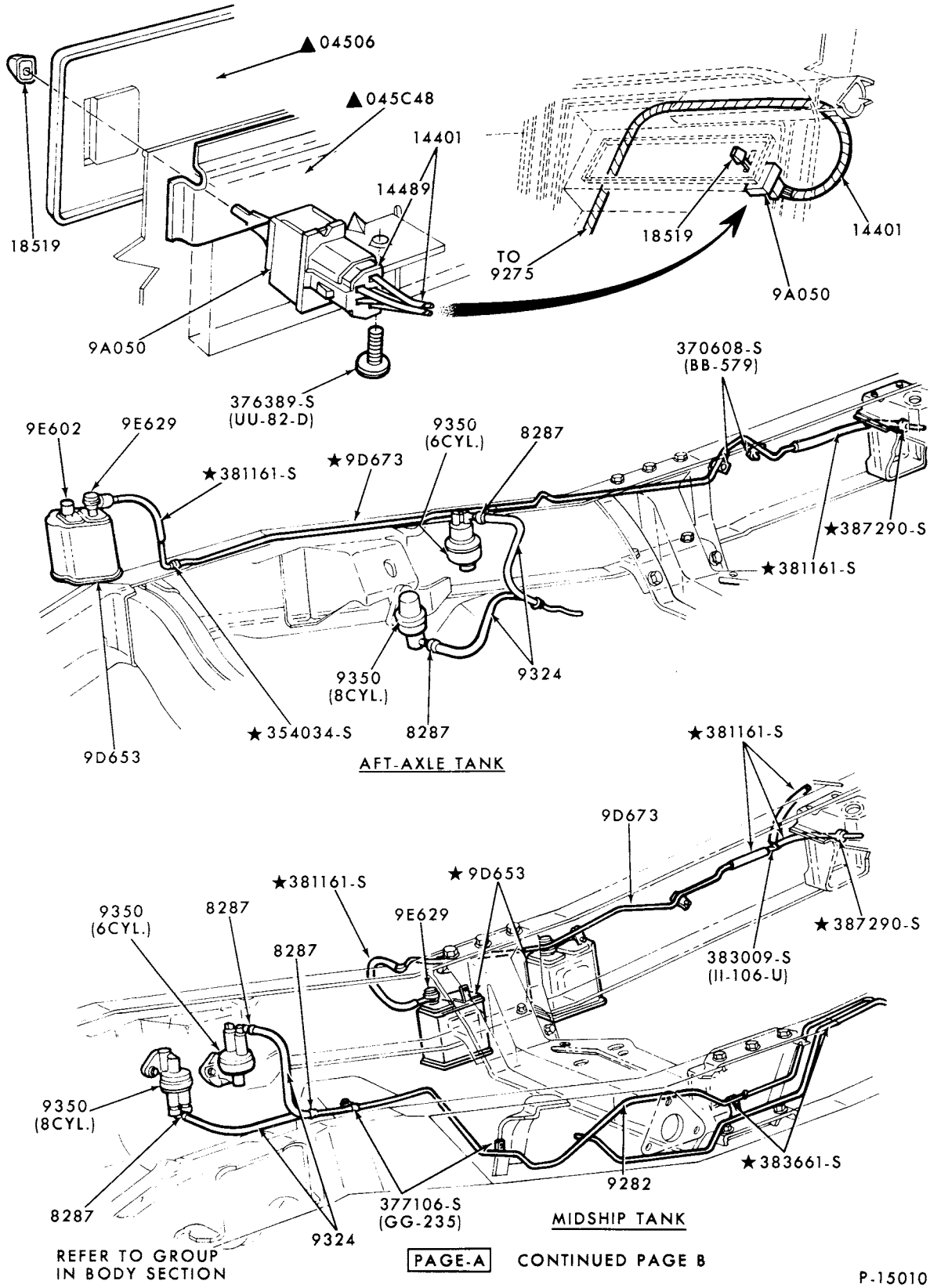

FUEL SYSTEM and RELATED PARTS
1978/ F150/350--4/W/D with MIDSHIP and AFT AXLE TANKS (PAGE A)

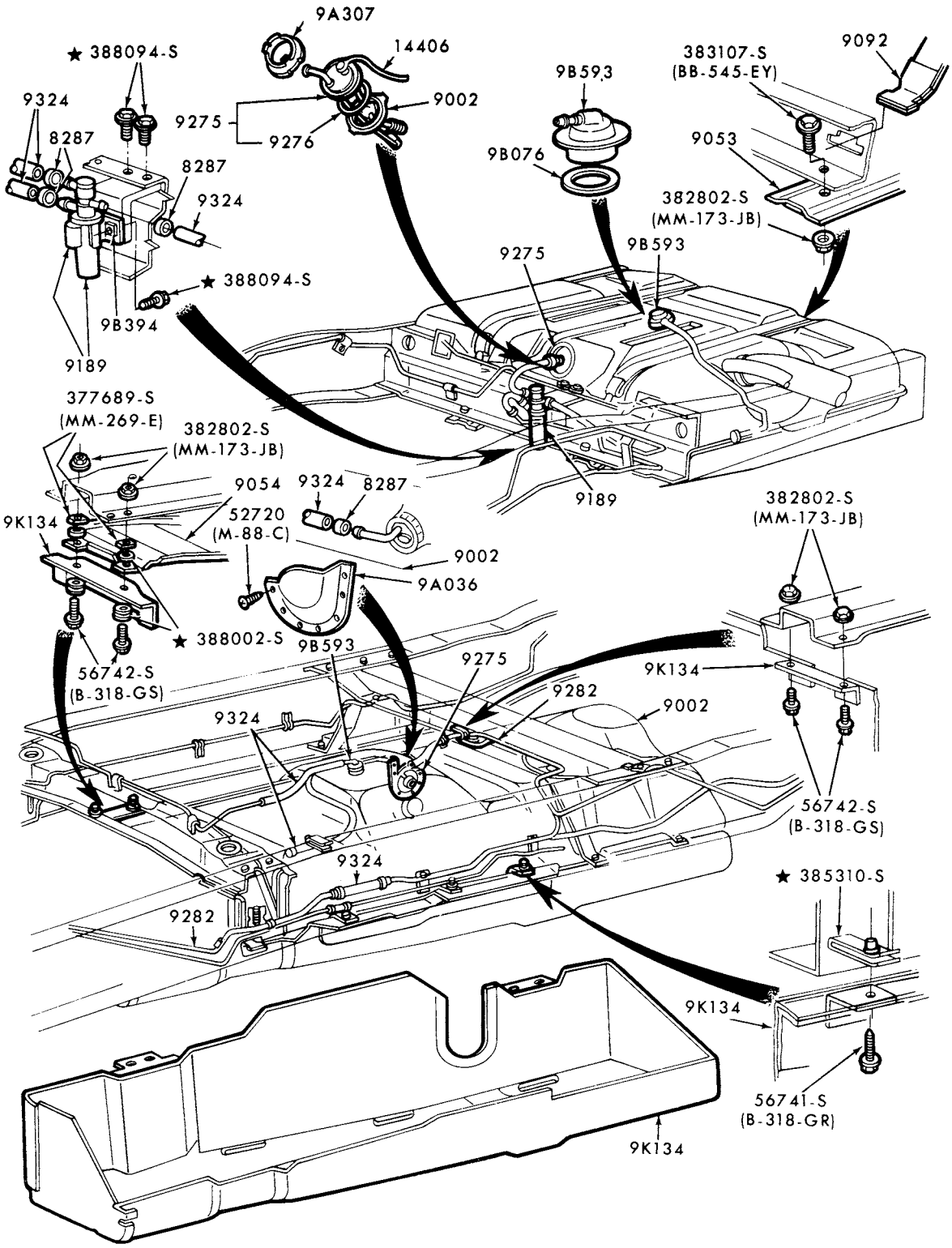

PAGE-B CONTINUED

P-15011

FUEL SYSTEM and RELATED PARTS
1978/ F150/350--4/W/D with MIDSHIP and AFT AXLE TANKS (PAGE B)

COPYRIGHT © 1979 FORD MOTOR COMPANY, DEARBORN, MICHIGAN

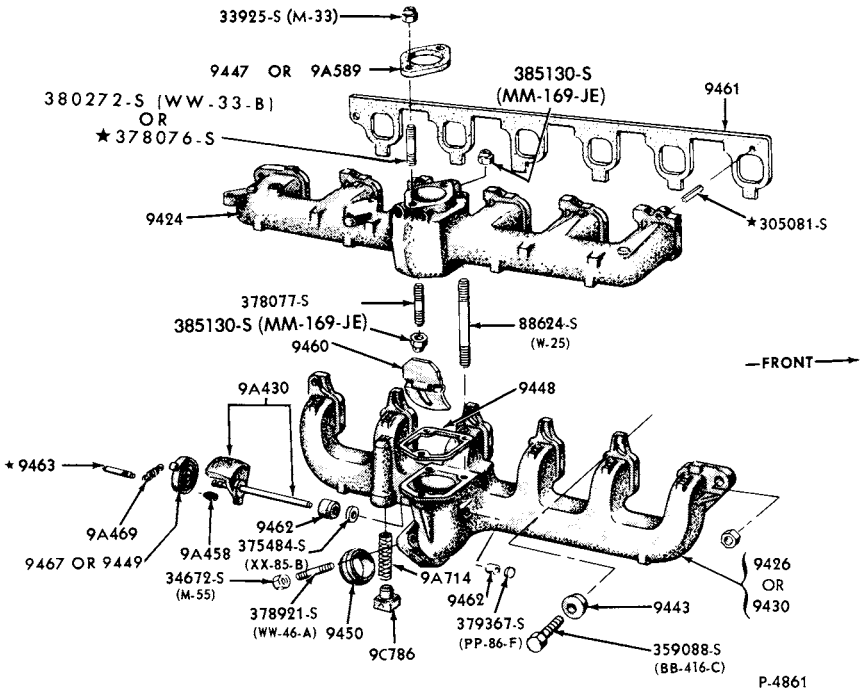

MANIFOLD and RELATED PARTS
1973/74 6 CYL. 240 and 300
1975/79 6 CYL. 300

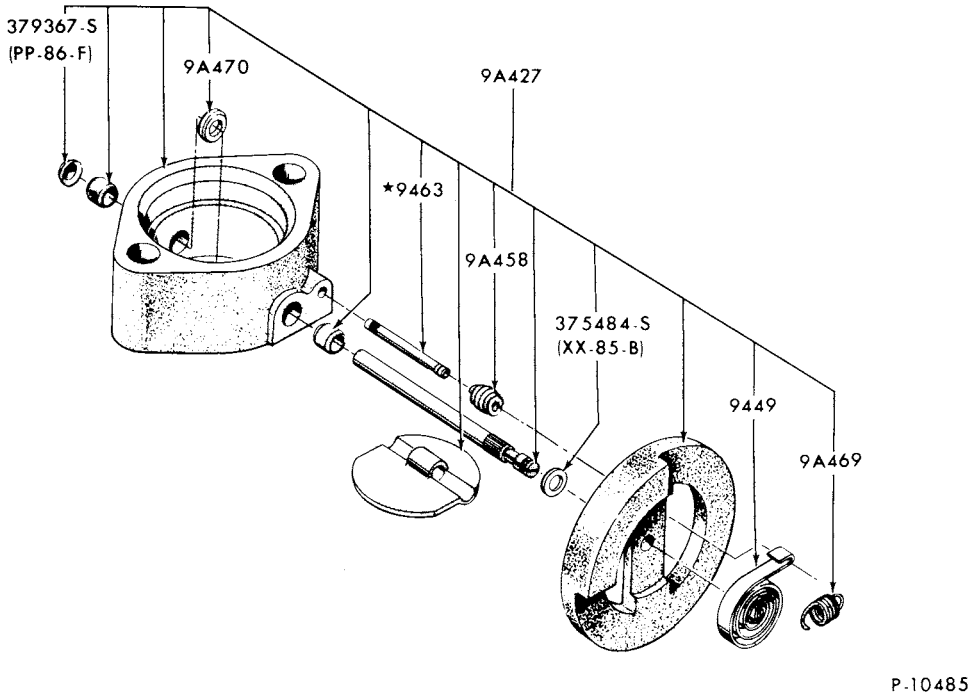

VALVE ASSY. (EXHAUST THERMOSTAT CONTROL)
1973/ F100--8 CYL. 360 and 390

COPYRIGHT © 1979 FORD MOTOR COMPANY—DEARBORN, MICHIGAN

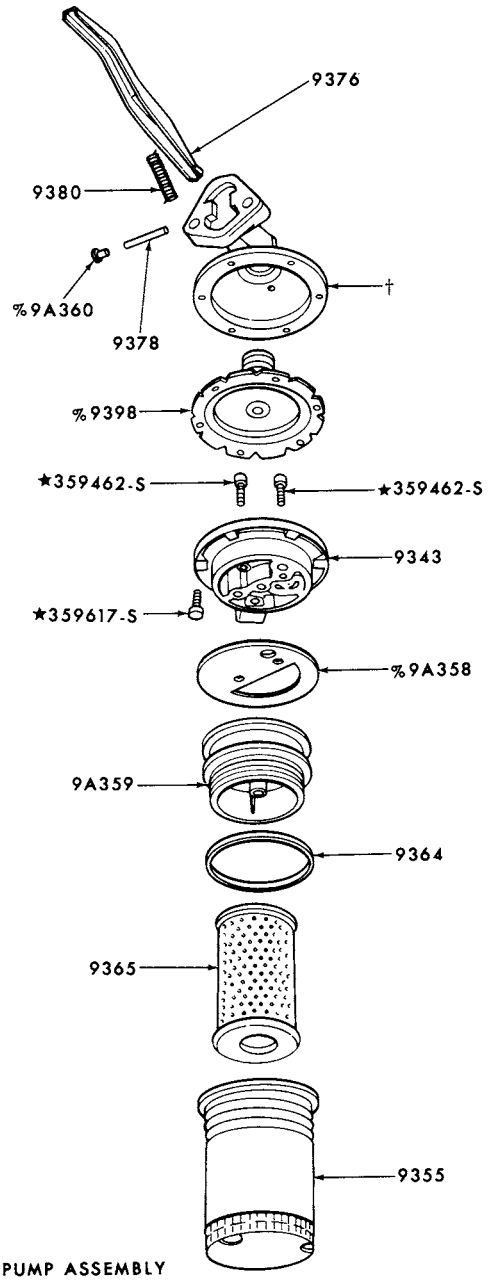

† SUPPLIED IN 9350 FUEL PUMP ASSEMBLY
% ALSO SUPPLIED IN 9349 REPAIR KIT

P-3715

FUEL PUMP and FILTER ASSY. - CARTER
1973/77 8 CYL. 302 and 330

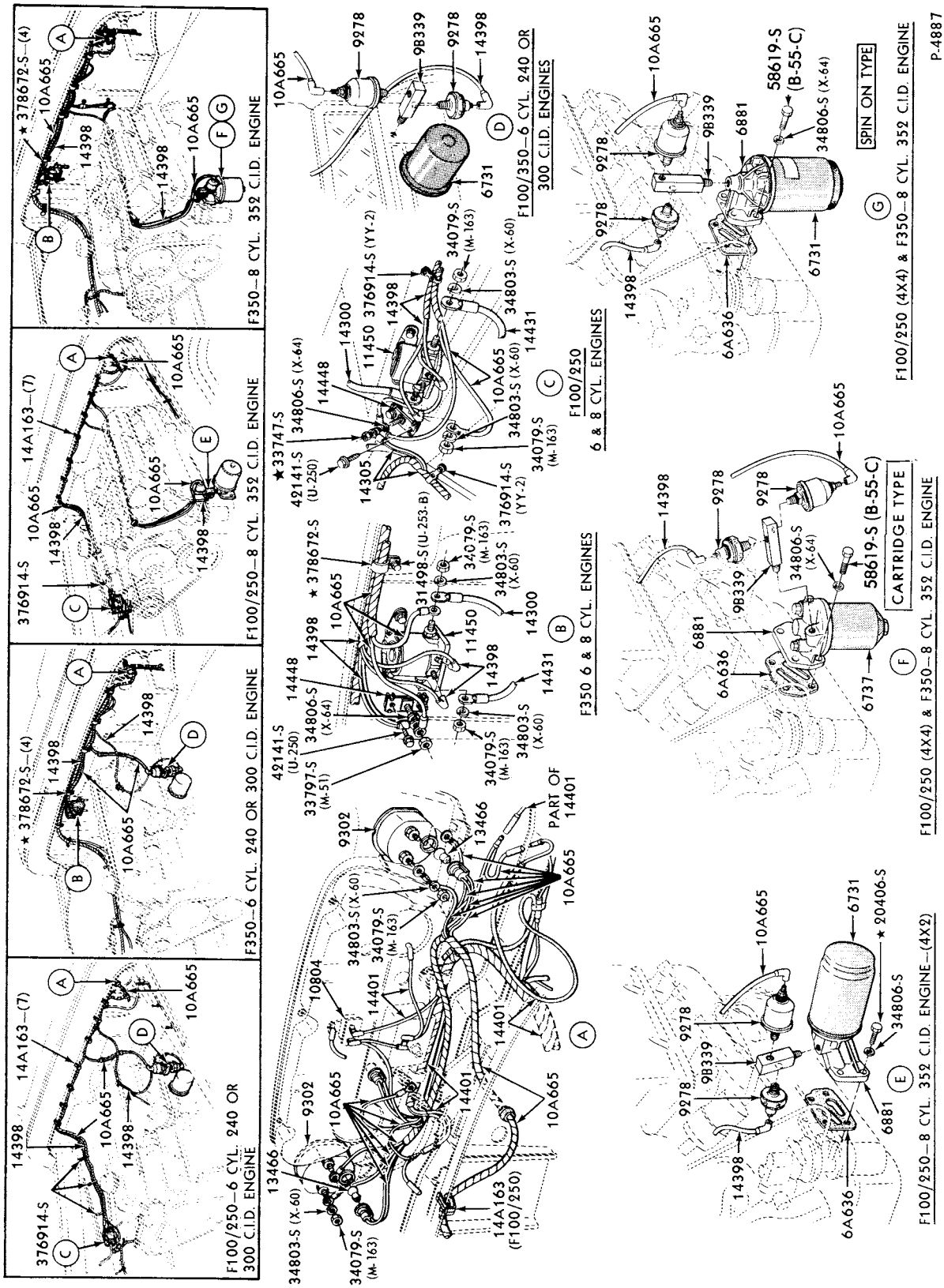

OIL PRESSURE SENDER INSTALLATION

1973/79 F100/350--w/WARNING LIGHTS or GAUGES

COPYRIGHT © 1979 FORD MOTOR COMPANY DEARBORN, MICHIGAN

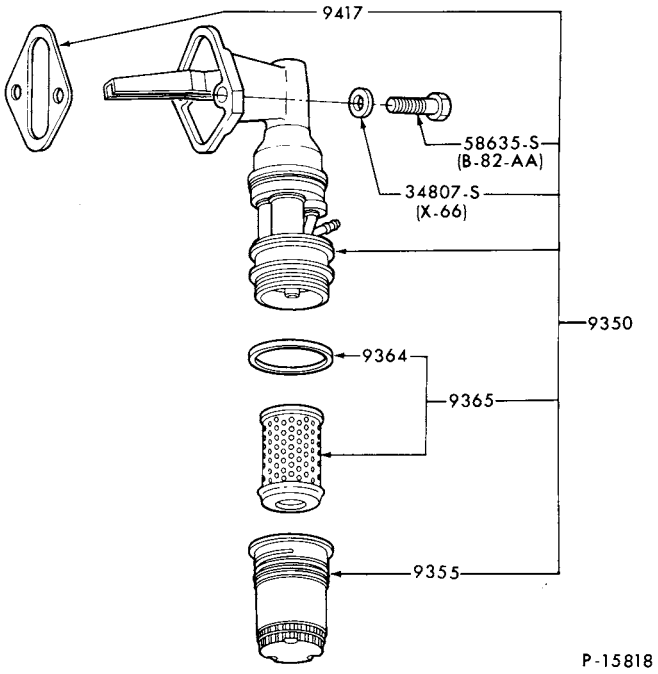

FUEL PUMP and FILTER ASSY.-CARTER
1978/79 6 and 8 CYL.-TYPICAL

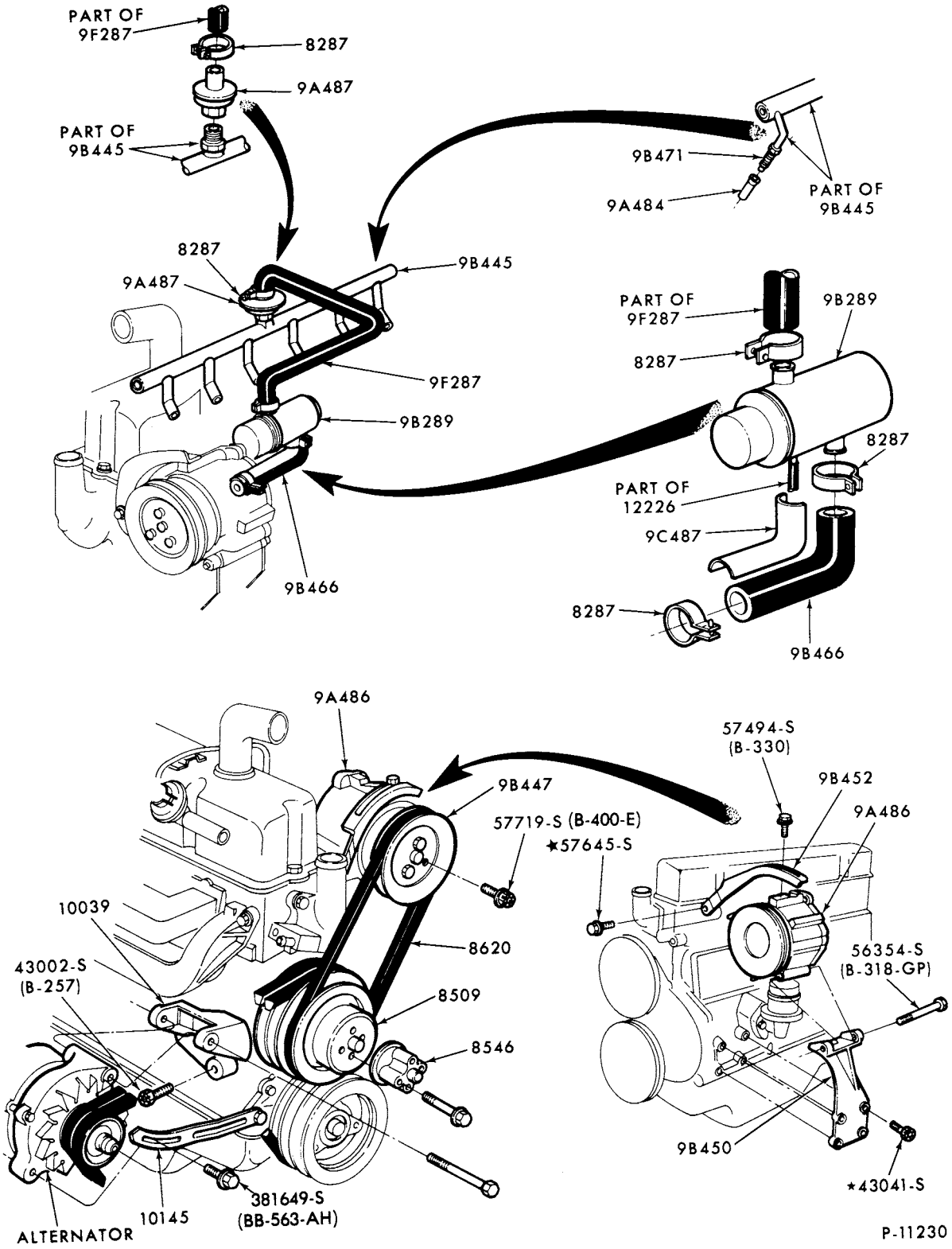

THERMACTOR EMISSION CONTROL SYSTEM
1974 E100/300, F100--6 CYL. 300

COPYRIGHT © 1979 —FORD MOTOR—DEARBORN, MICHIGAN COMPANY

1973/79 TRUCK SERIES 100/500

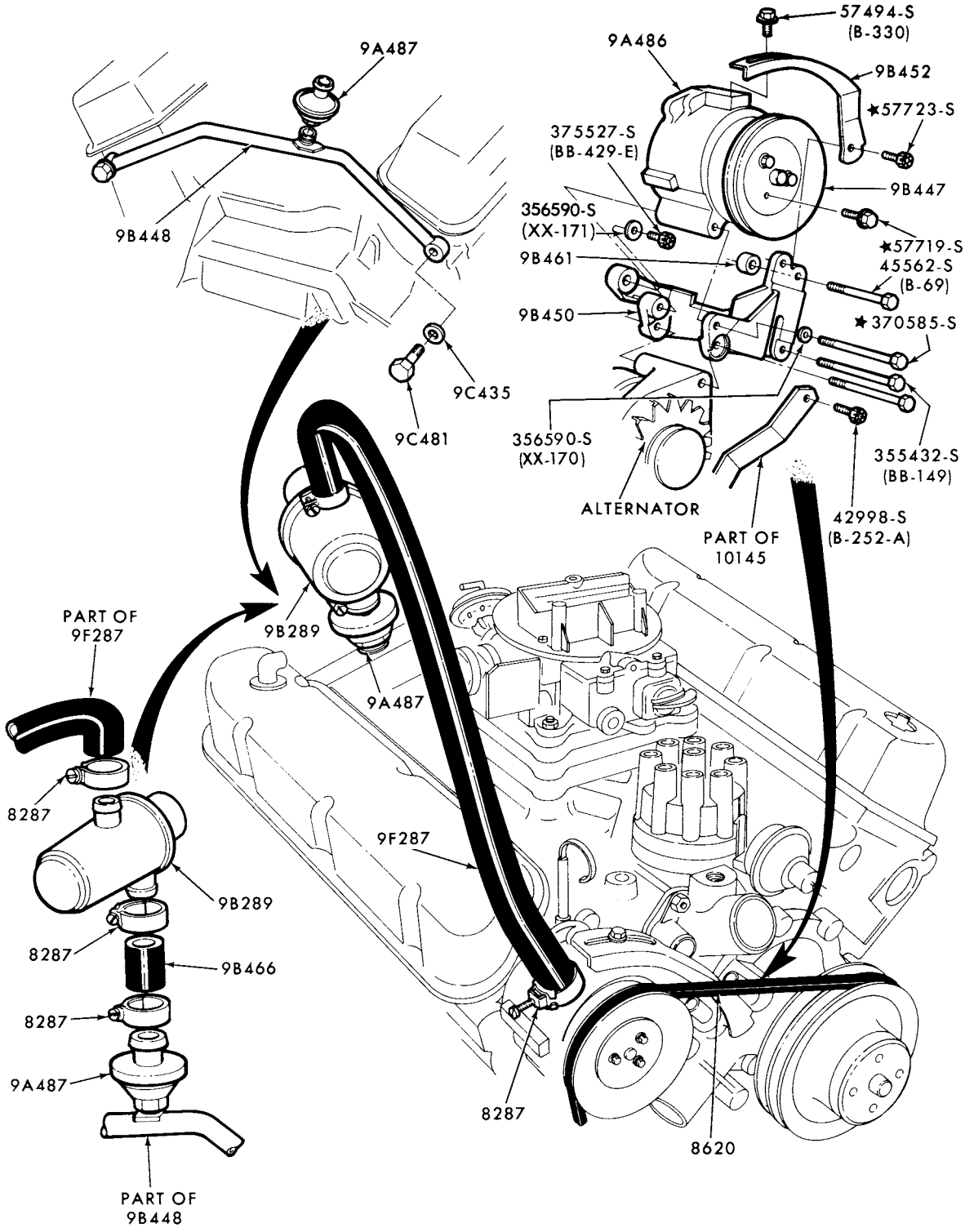

P-11227

THERMACTOR EMISSION CONTROL SYSTEM
1974 E100/300--8 CYL. 302

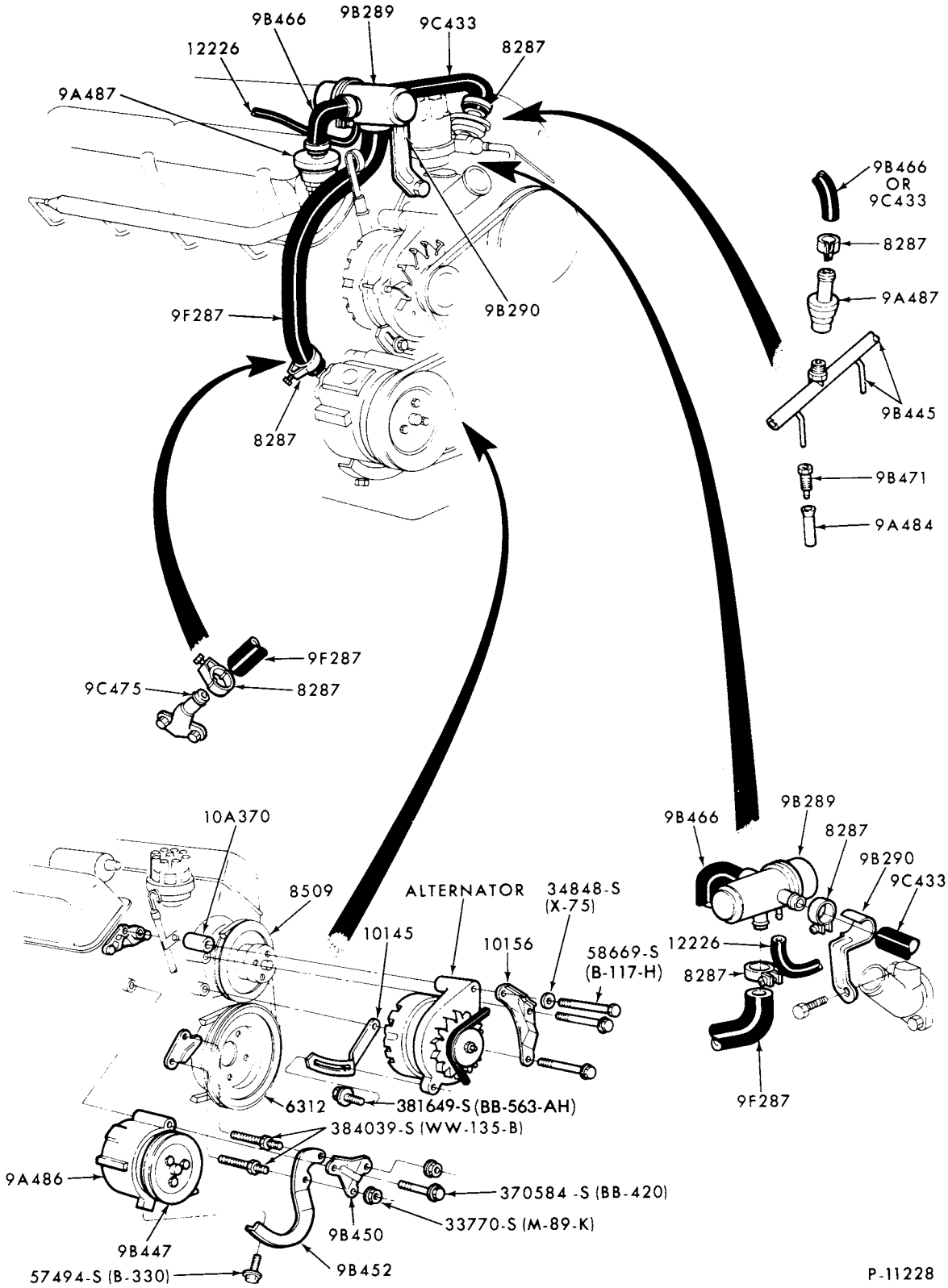

THERMACTOR EMISSION CONTROL SYSTEM
1974 F100--8 CYL. 302

COPYRIGHT © 1979 - FORD MOTOR - DEARBORN, MICHIGAN
COMPANY

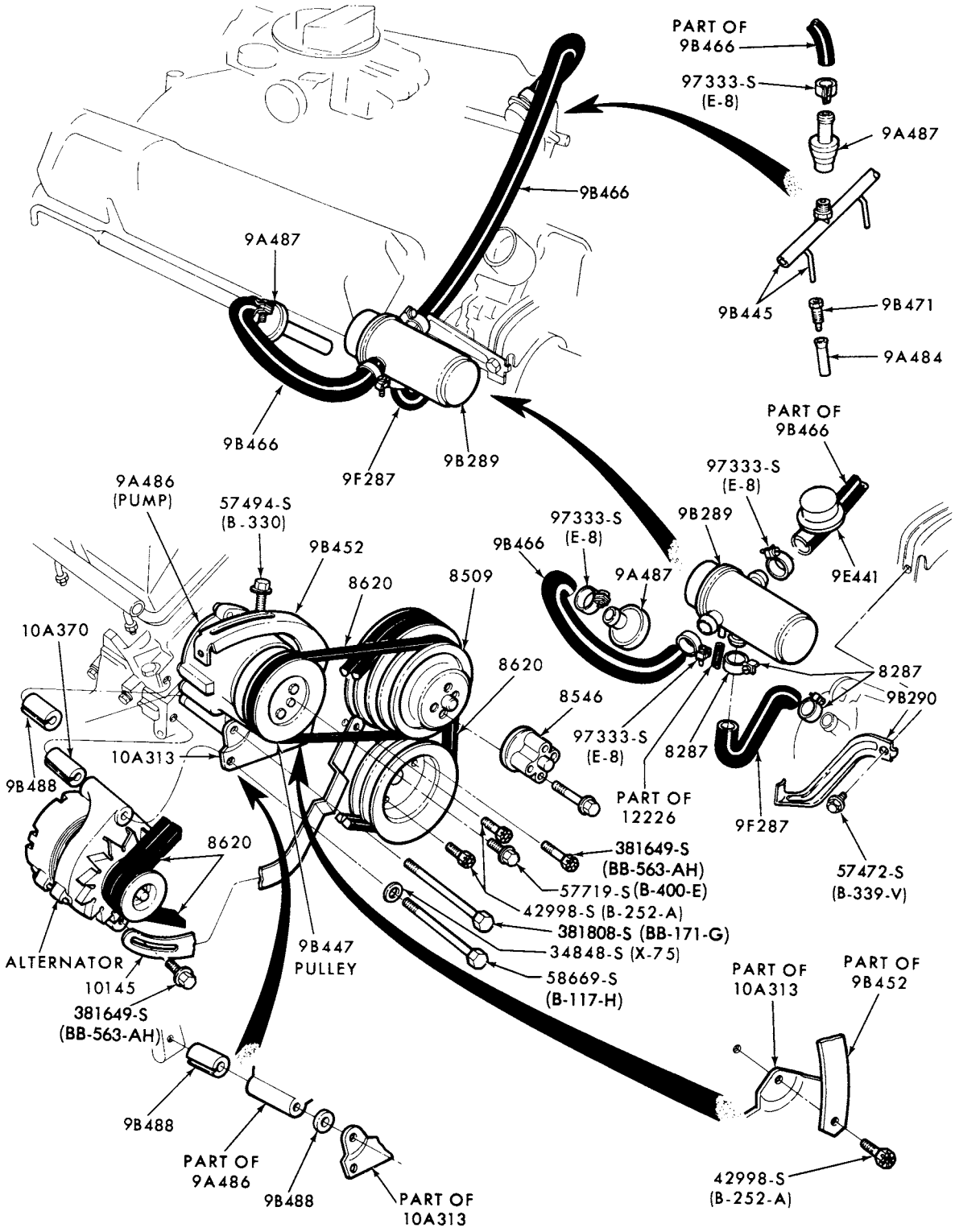

THERMACTOR EMISSION CONTROL SYSTEM
1974 F100--8 CYL. 360, 390--EXC. CALIF.
1975/76 F100/350--8 CYL. 360, 390--ALL
1975/76 M450/500--8 CYL. 360,390--ALL

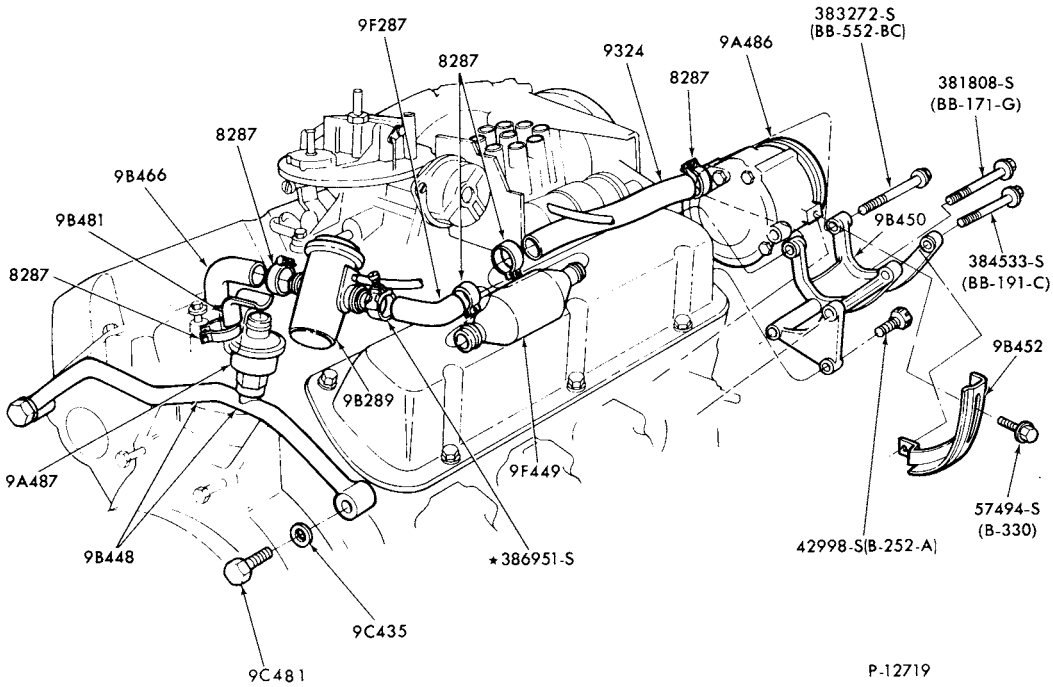

THERMACTOR EMISSION CONTROL SYSTEM
1975/ E100--8 CYL. 351W-EXC. CALIF.

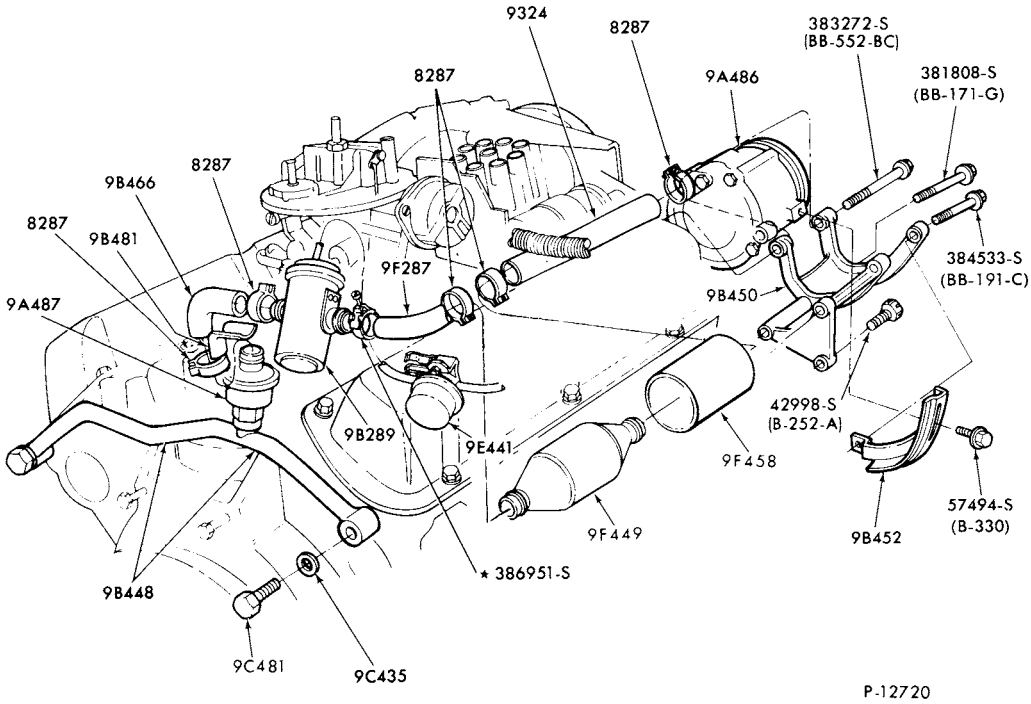

THERMACTOR EMISSION CONTROL SYSTEM
1975/ E100--8 CYL. 351W-CALIF. ONLY

COPYRIGHT © 1979 FORD MOTOR COMPANY DEARBORN, MICHIGAN

1973/79
TRUCK SERIES 100/500

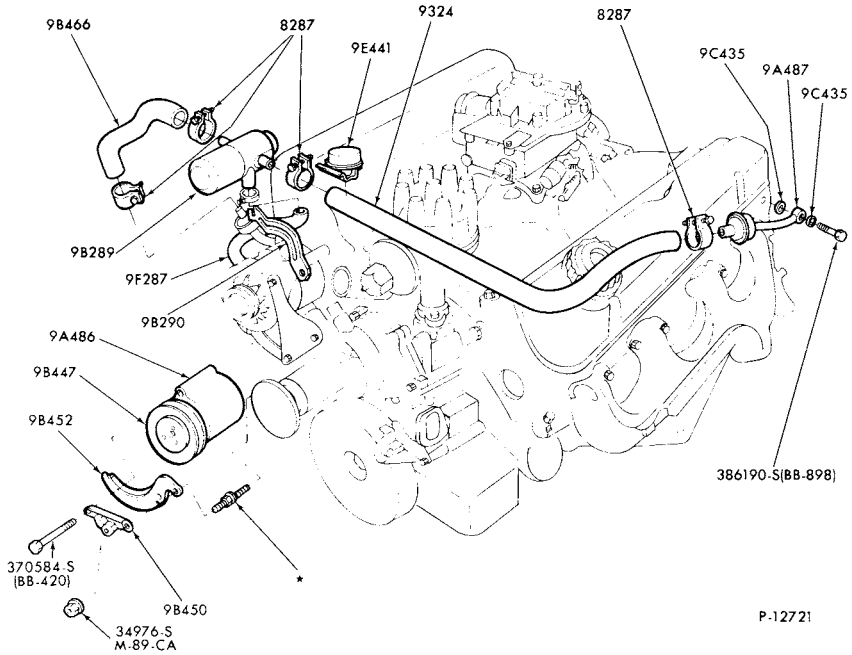

THERMACTOR EMISSION CONTROL SYSTEM
1975/ F100--8 CYL. 302-AUTO. TRANS.

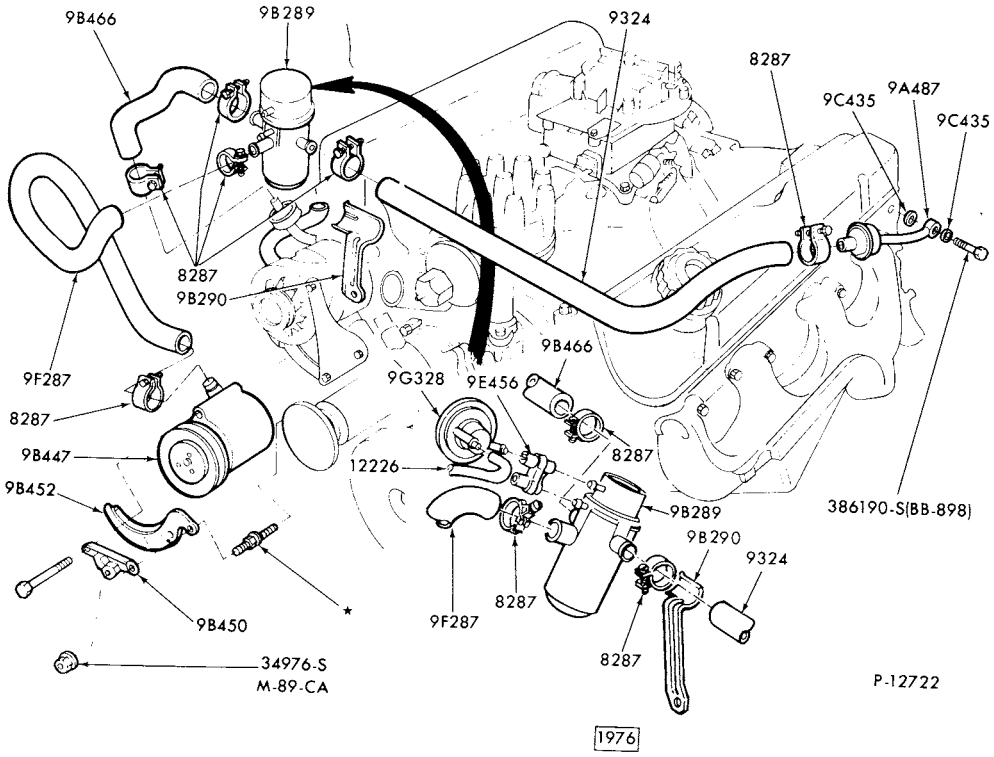

THERMACTOR EMISSION CONTROL SYSTEM
1975/ F100--8 CYL. 302-MANUAL TRANS.

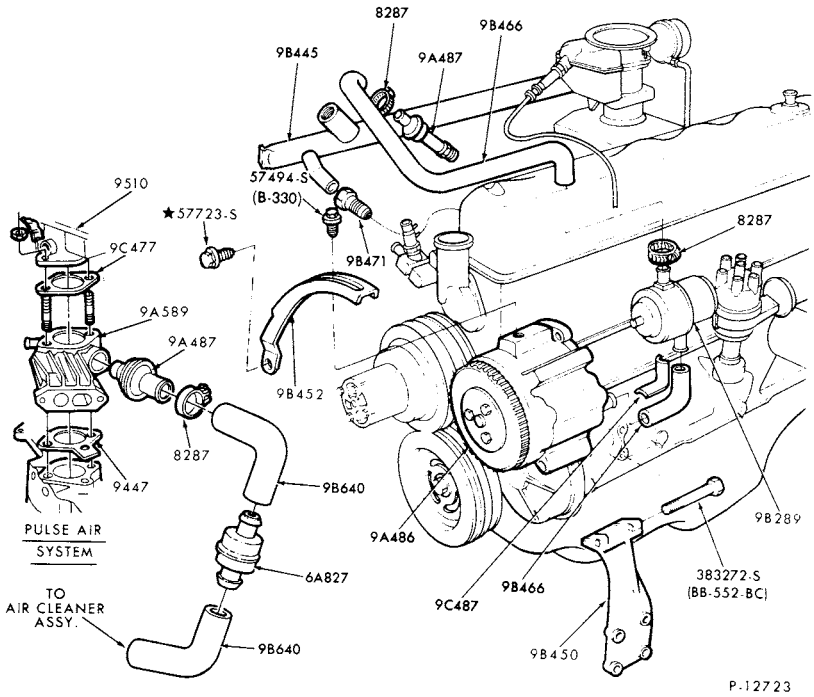

THERMACTOR EMISSION CONTROL SYSTEM
1975/ F100,E100--6 CYL. 300

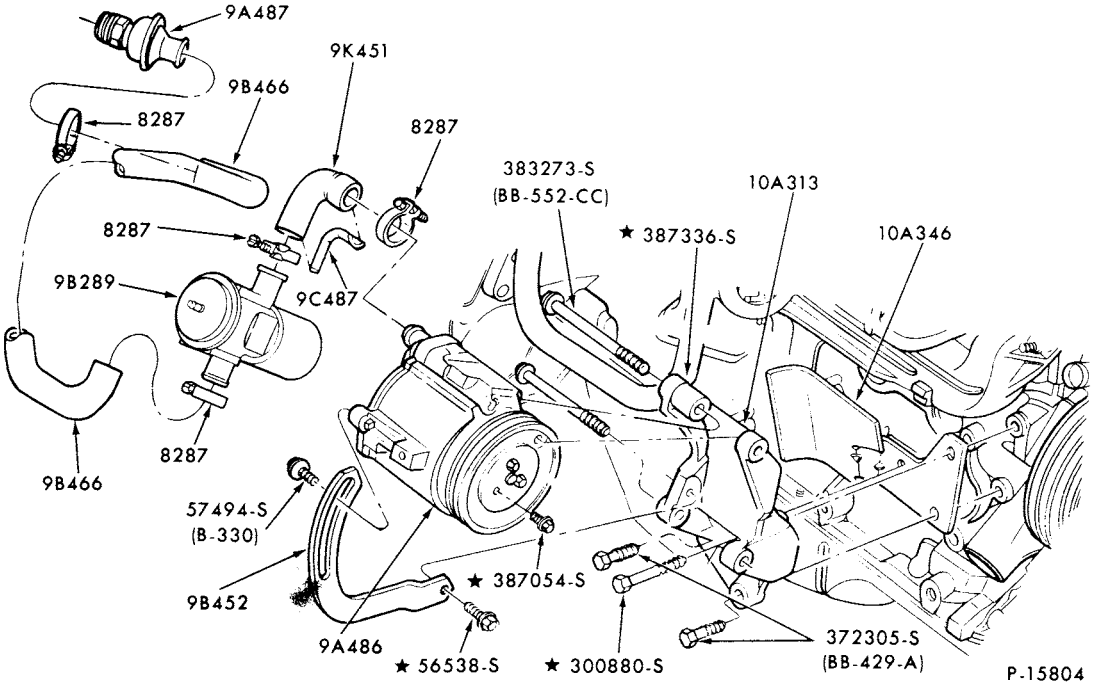

THERMACTOR EMISSION CONTROL SYSTEM
1979 E100,F100/350--6 CYL. 300

COPYRIGHT © 1980 FORD MOTOR COMPANY, DEARBORN, MICHIGAN

1973/79
TRUCK SERIES 100/500

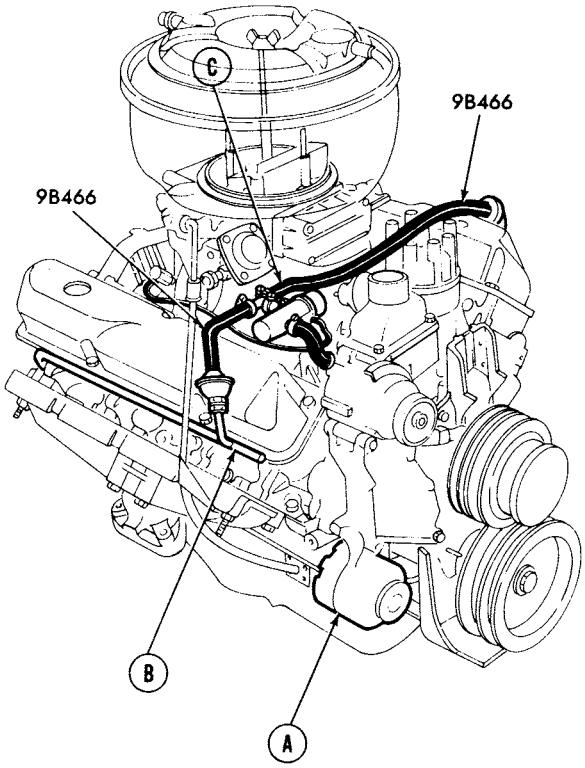

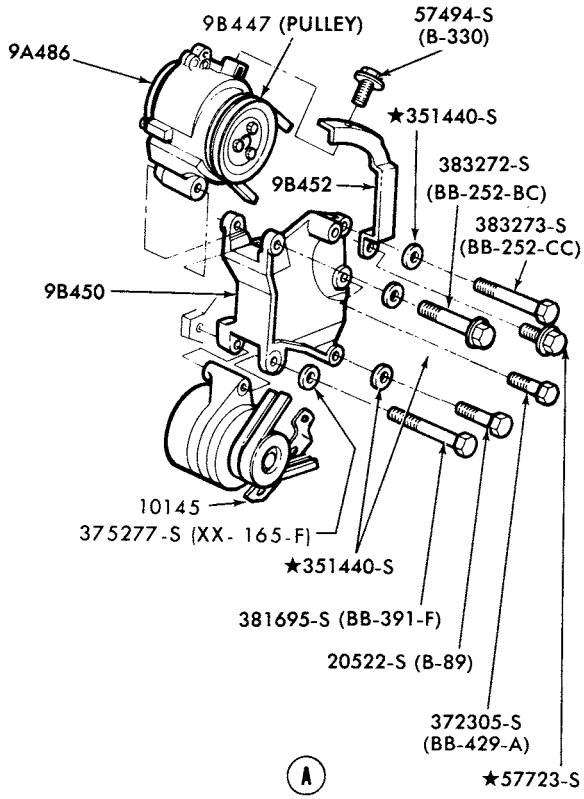

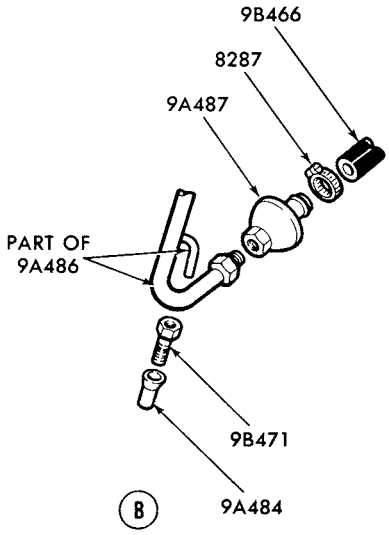

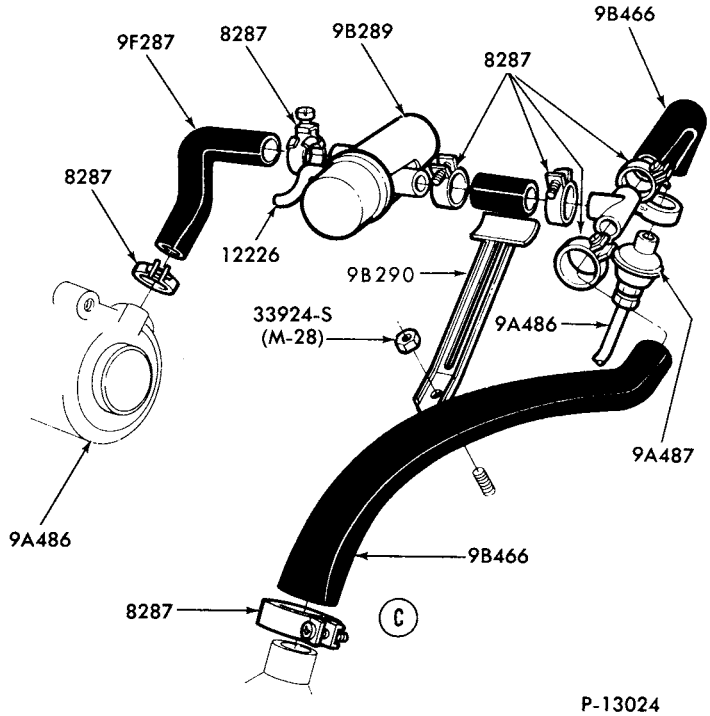

P-13024

THERMACTOR EMISSION CONTROL SYSTEM
1975/77 B-F500--8 CYL. 330

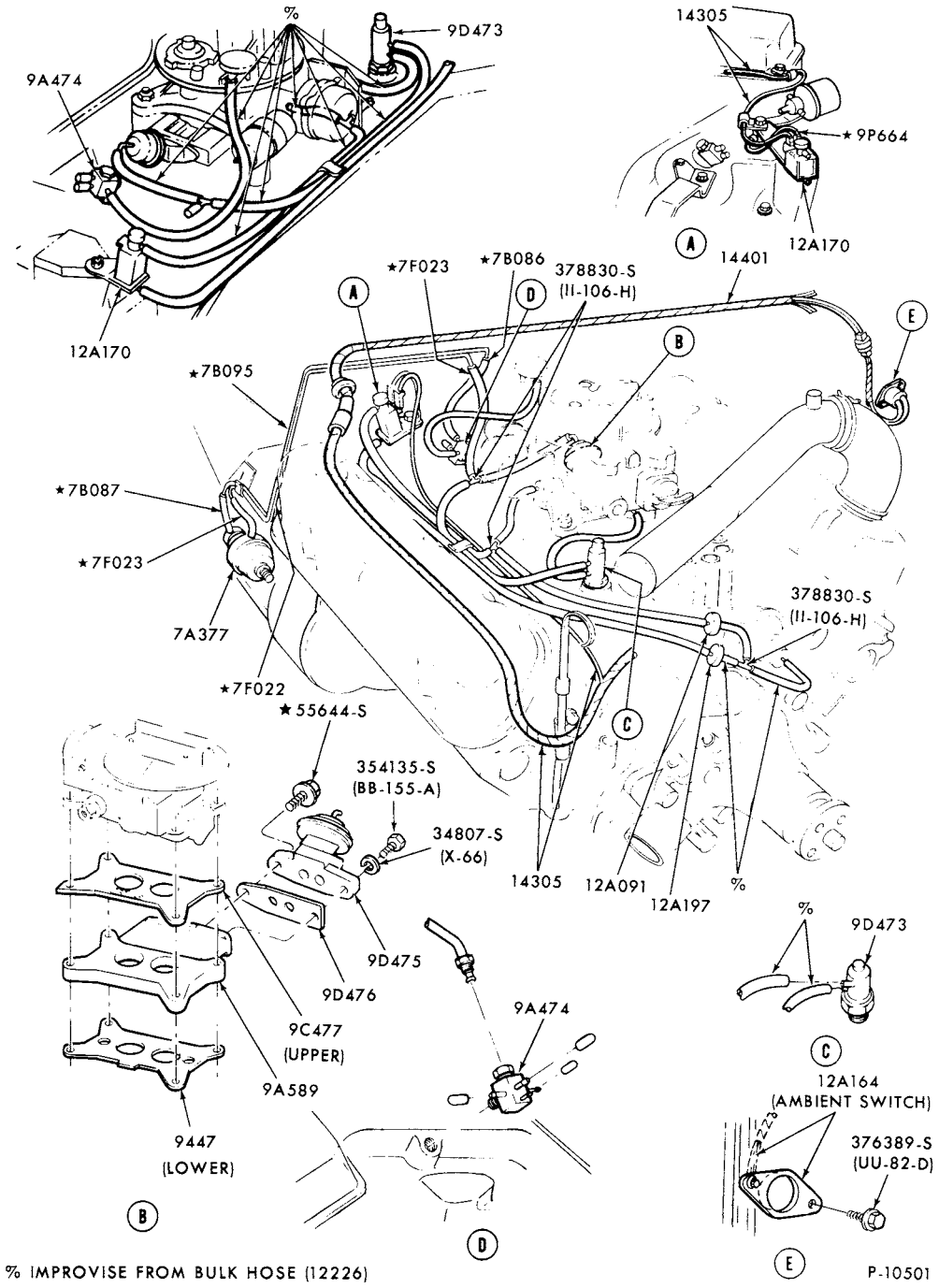

% IMPROVISE FROM BULK HOSE (12226)

EMISSION SYSTEM-EXHAUST GAS RECIRCULATION (E.G.R.)
1973 E100/300--8 CYL. 302-with A/T and AUX. A/C

COPYRIGHT © 1979 FORD MOTOR COMPANY DEARBORN, MICHIGAN

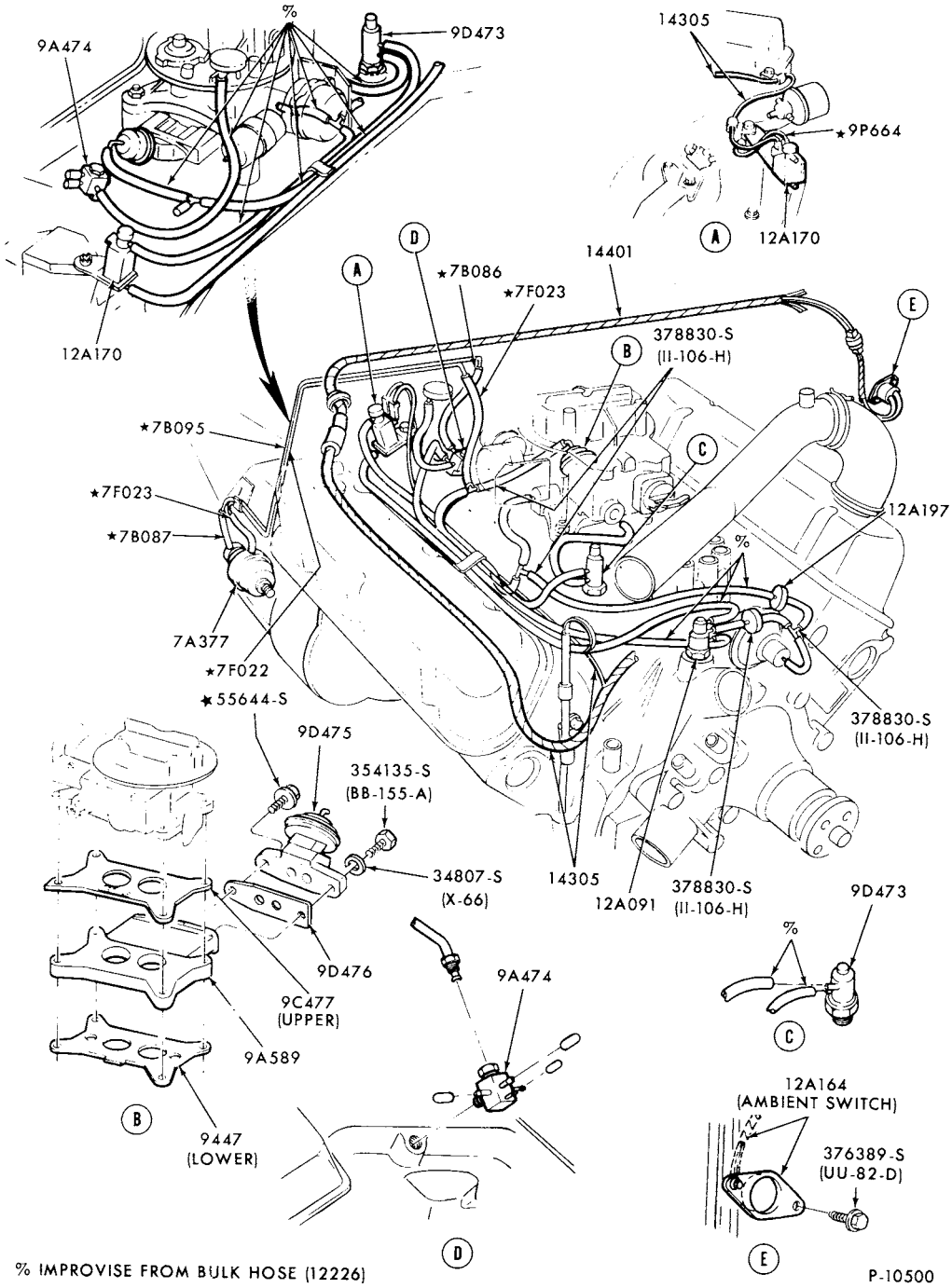

EMISSION SYSTEM-EXHAUST GAS RECIRCULATION (E.G.R.)
1973 E100/300--8 CYL. 302-with A/T and WITHOUT AUX. A/C

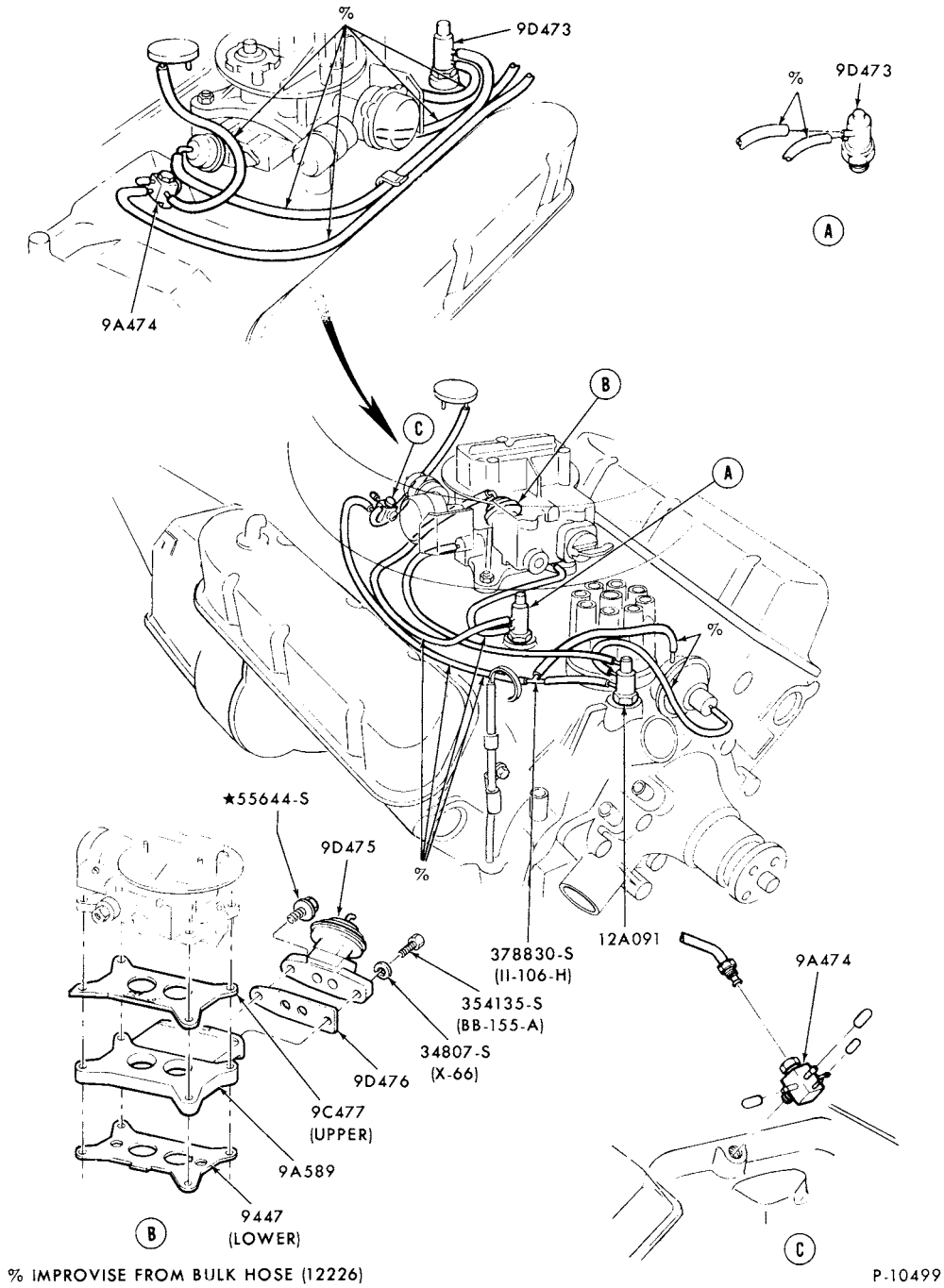

% IMPROVISE FROM BULK HOSE (12226)

P-10499

EMISSION SYSTEM-EXHAUST GAS RECIRCULATION (E.G.R.)
1973 E100/300--8 CYL. 302-WITH M/T and AUX. A/C

COPYRIGHT © 1979 - FORD MOTOR COMPANY - DEARBORN, MICHIGAN

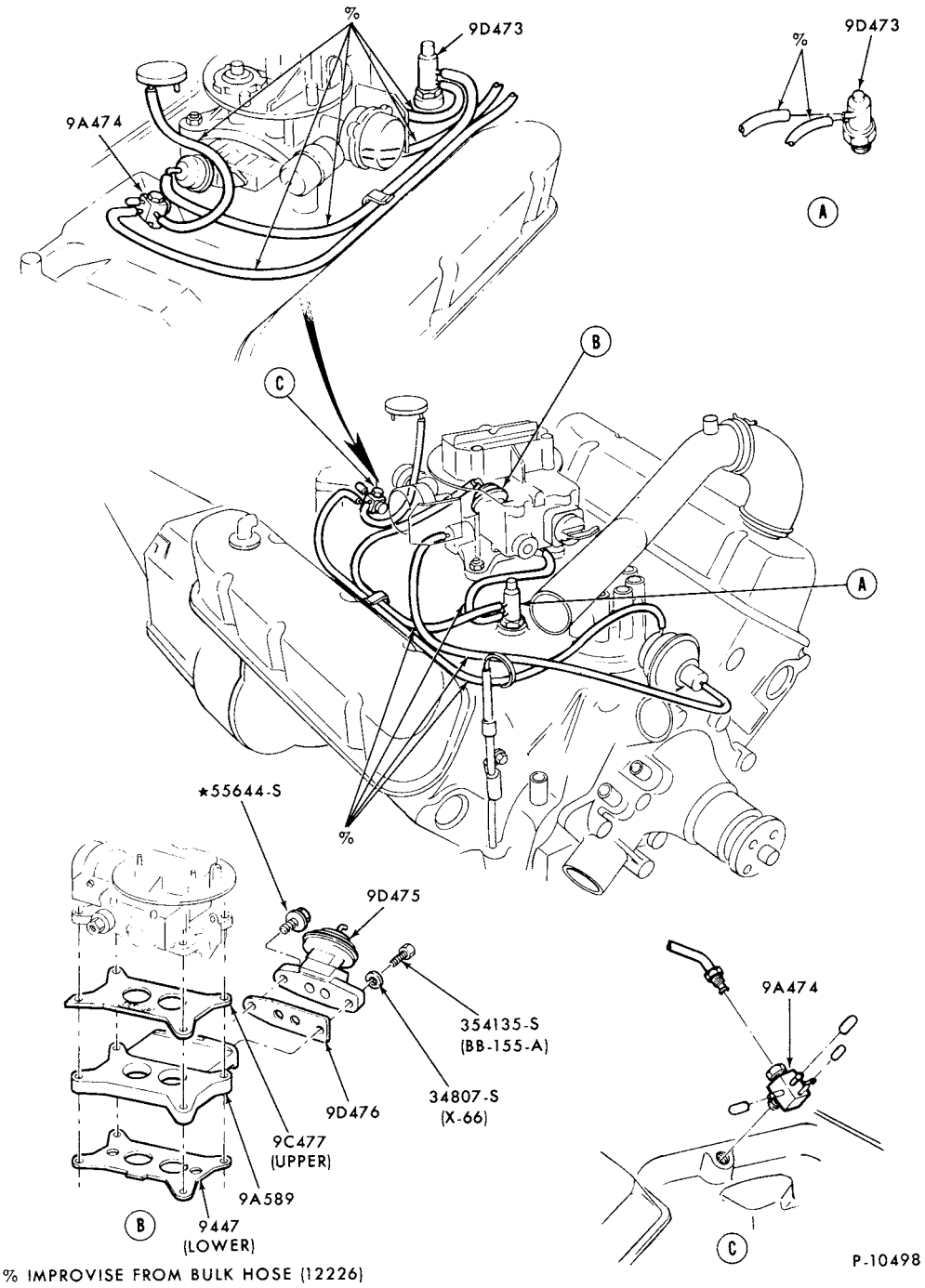

% IMPROVISE FROM BULK HOSE (12226)

EMISSION SYSTEM-EXHAUST GAS RECIRCULATION (E.G.R.)
1973 E100/300--8 CYL. 302 WITH M/T and WITHOUT AUX. A/C

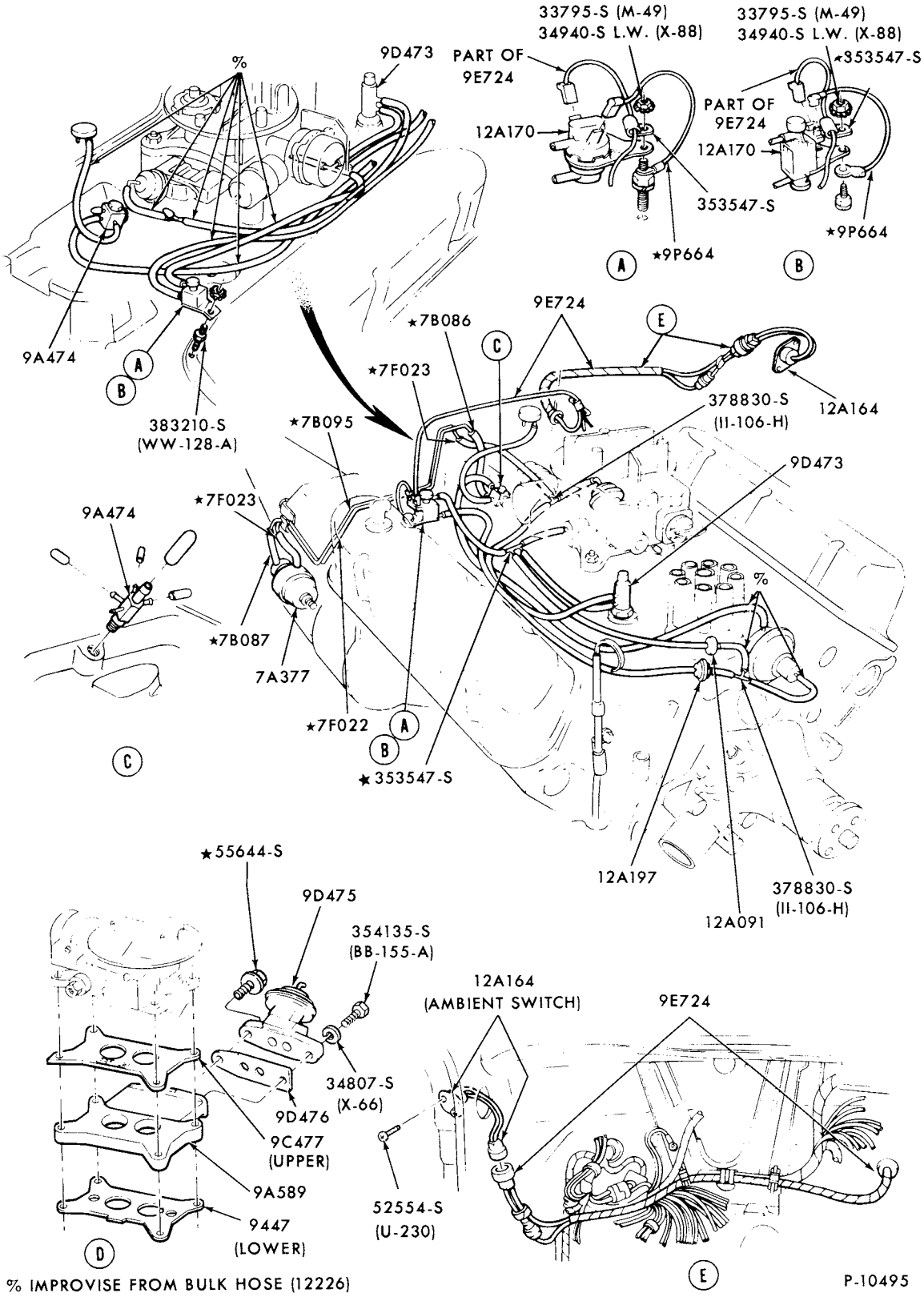

% IMPROVISE FROM BULK HOSE (12226)

EMISSION SYSTEM-EXHAUST GAS RECIRCULATION (E.G.R.)
1973 F100--8 CYL. 302

COPYRIGHT © 1979 — FORD MOTOR COMPANY, DEARBORN, MICHIGAN

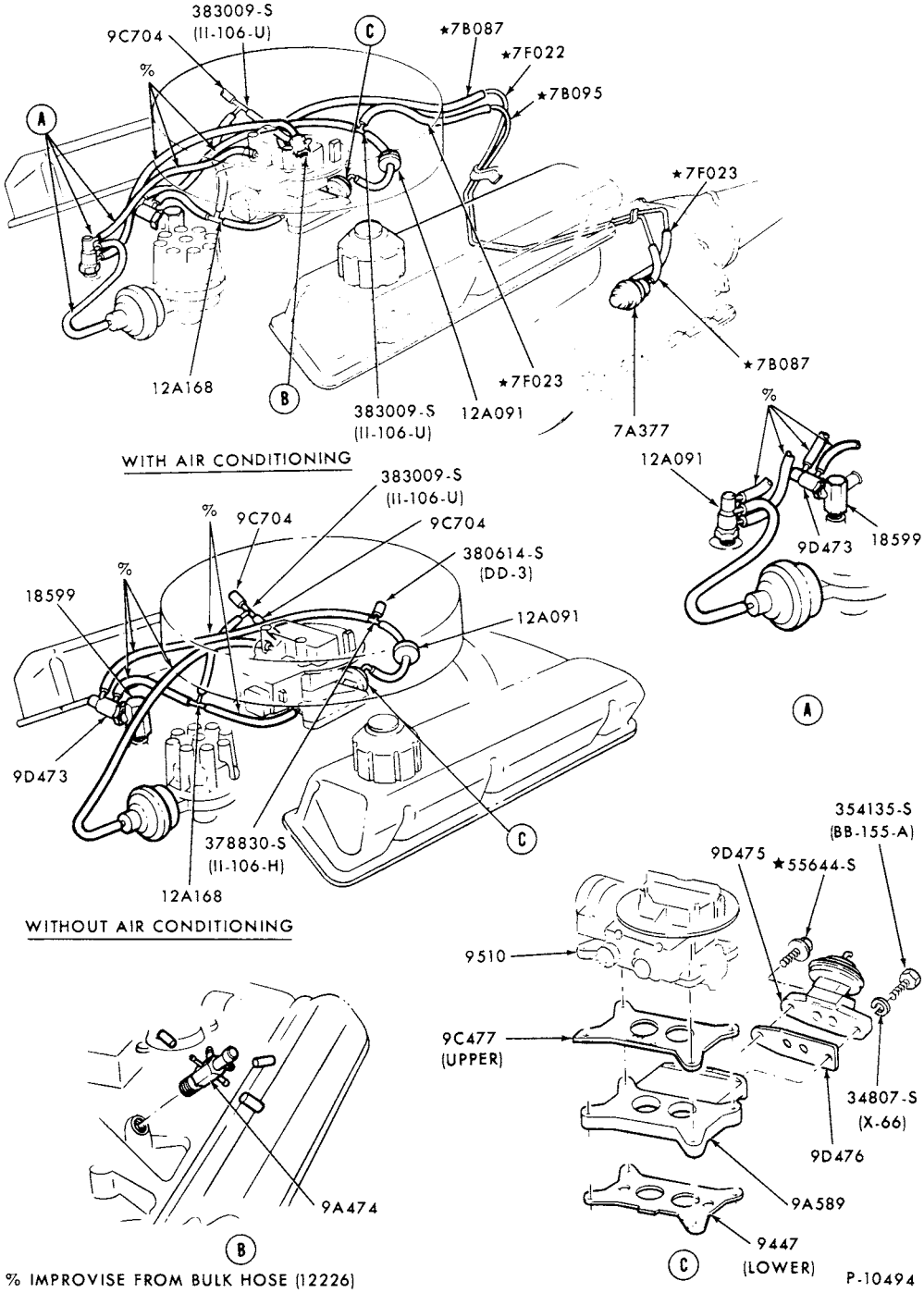

% IMPROVISE FROM BULK HOSE (12226)

EMISSION SYSTEM-EXHAUST GAS RECIRCULATION (E.G.R.)
1973 F250/350--8 CYL. 360 and 390

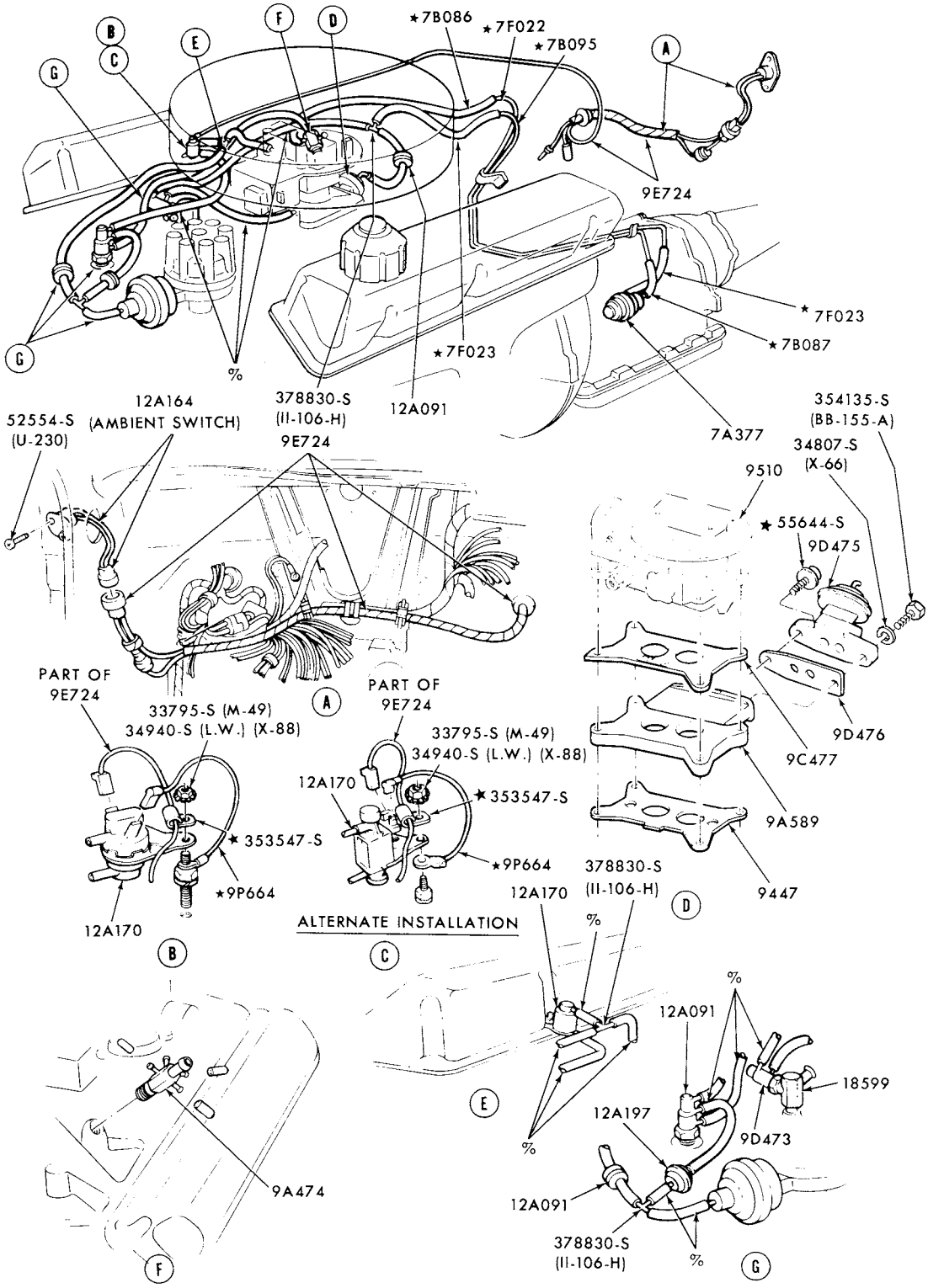

% IMPROVISE FROM BULK HOSE (12226)

P-10493

EMISSION SYSTEM-EXHAUST GAS RECIRCULATION (E.G.R.)
1973 F100--8 CYL. 360 and 390 WITH M/T and A/C

COPYRIGHT © 1979 FORD MOTOR COMPANY DEARBORN, MICHIGAN

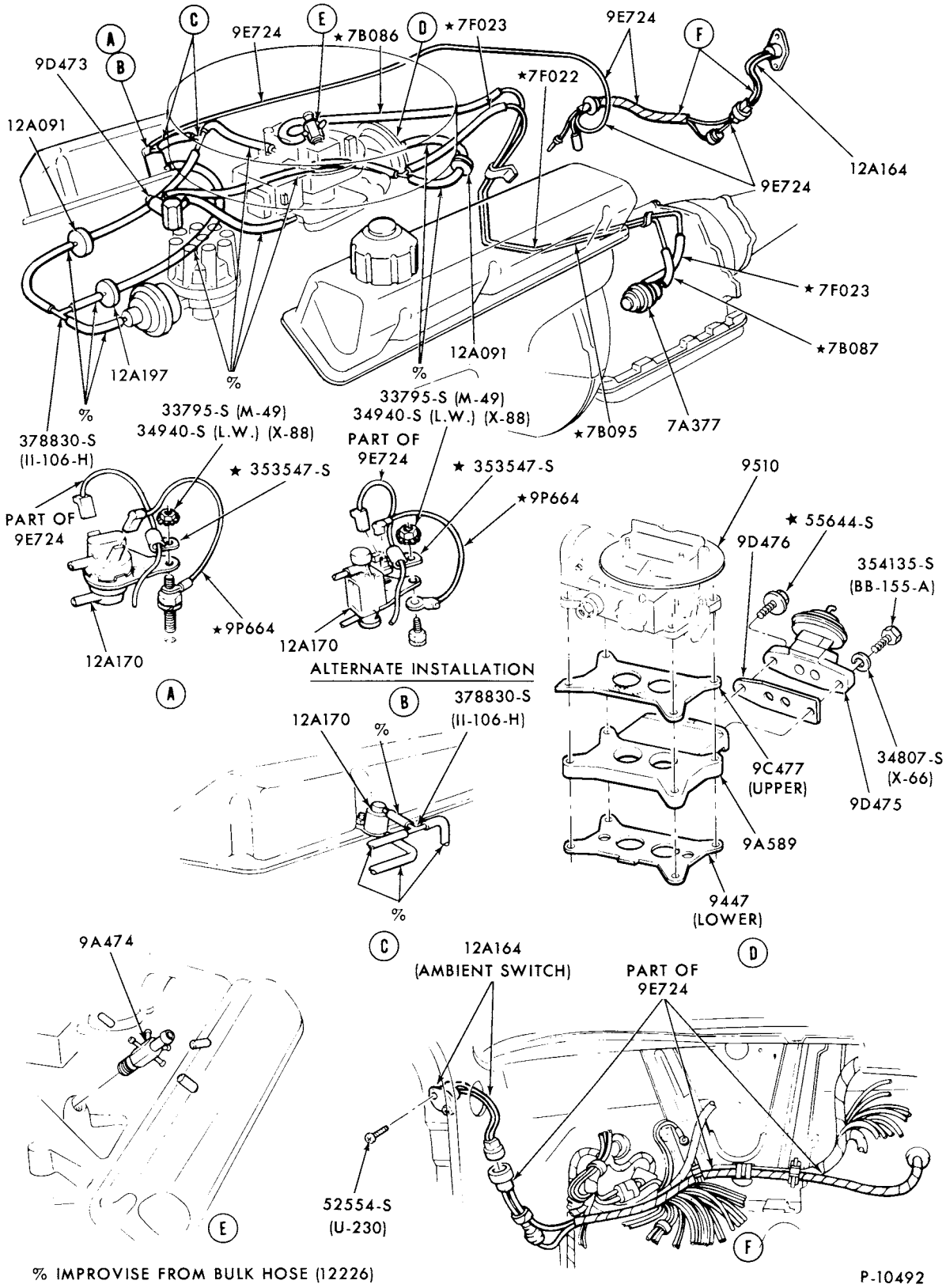

% IMPROVISE FROM BULK HOSE (12226)

P-10492

EMISSION SYSTEM-EXHAUST GAS RECIRCULATION (E.G.R.)
1973 F100--8 CYL. 360 and 390 WITH M/T and WITHOUT A/C

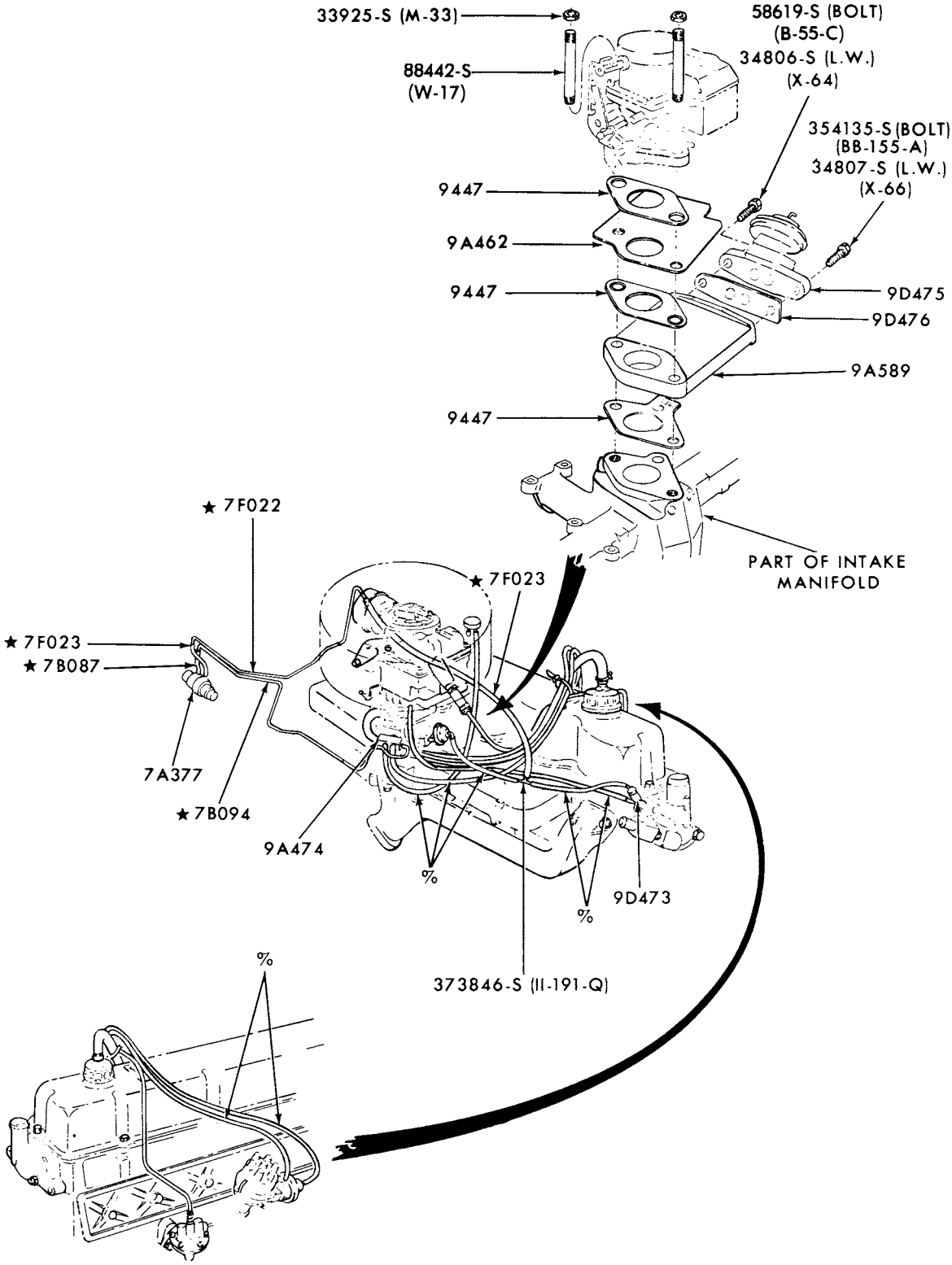

% IMPROVISE FROM BULK HOSE (12226)

P-11348

EMISSION SYSTEM-EXHAUST GAS RECIRCULATION (E.G.R.)
1974 F100--6 CYL. 240-with A/T and T/E

COPYRIGHT © 1979 FORD MOTOR COMPANY
DEARBORN, MICHIGAN

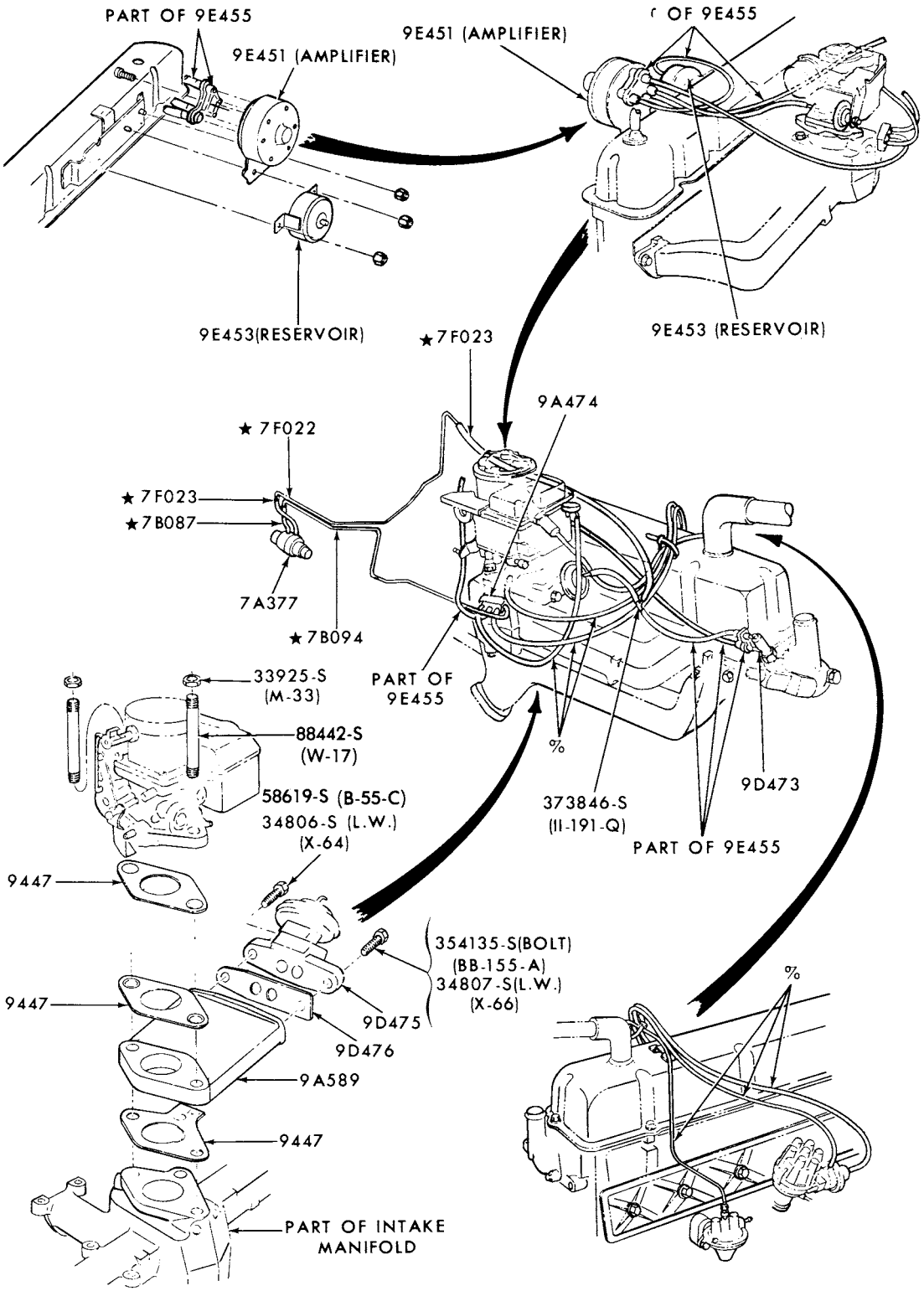

%IMPROVISE FROM BULK HOSE (12226)

P-11349

EMISSION SYSTEM-EXHAUST GAS RECIRCULATION (E.G.R.)
1974 E200/300--6 CYL. 240-with A/T and T/E

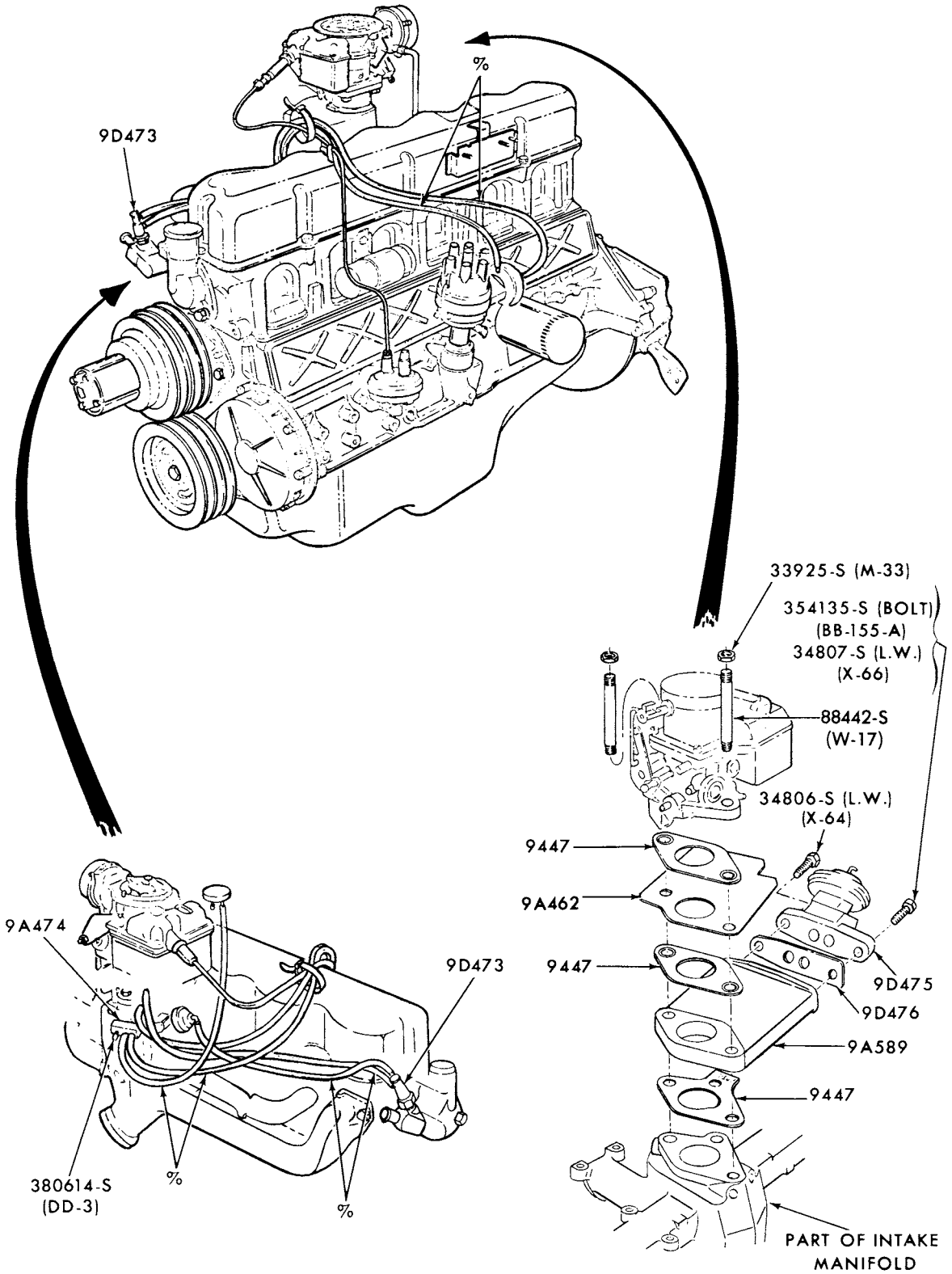

%IMPROVISE FROM BULK HOSE (12226)

P-11350

EMISSION SYSTEM-EXHAUST GAS RECIRCULATION (E.G.R.)
1974 F100, E200/300--6 CYL. 240-with M/T and T/E

COPYRIGHT © 1979 FORD MOTOR-DEARBORN, MICHIGAN COMPANY

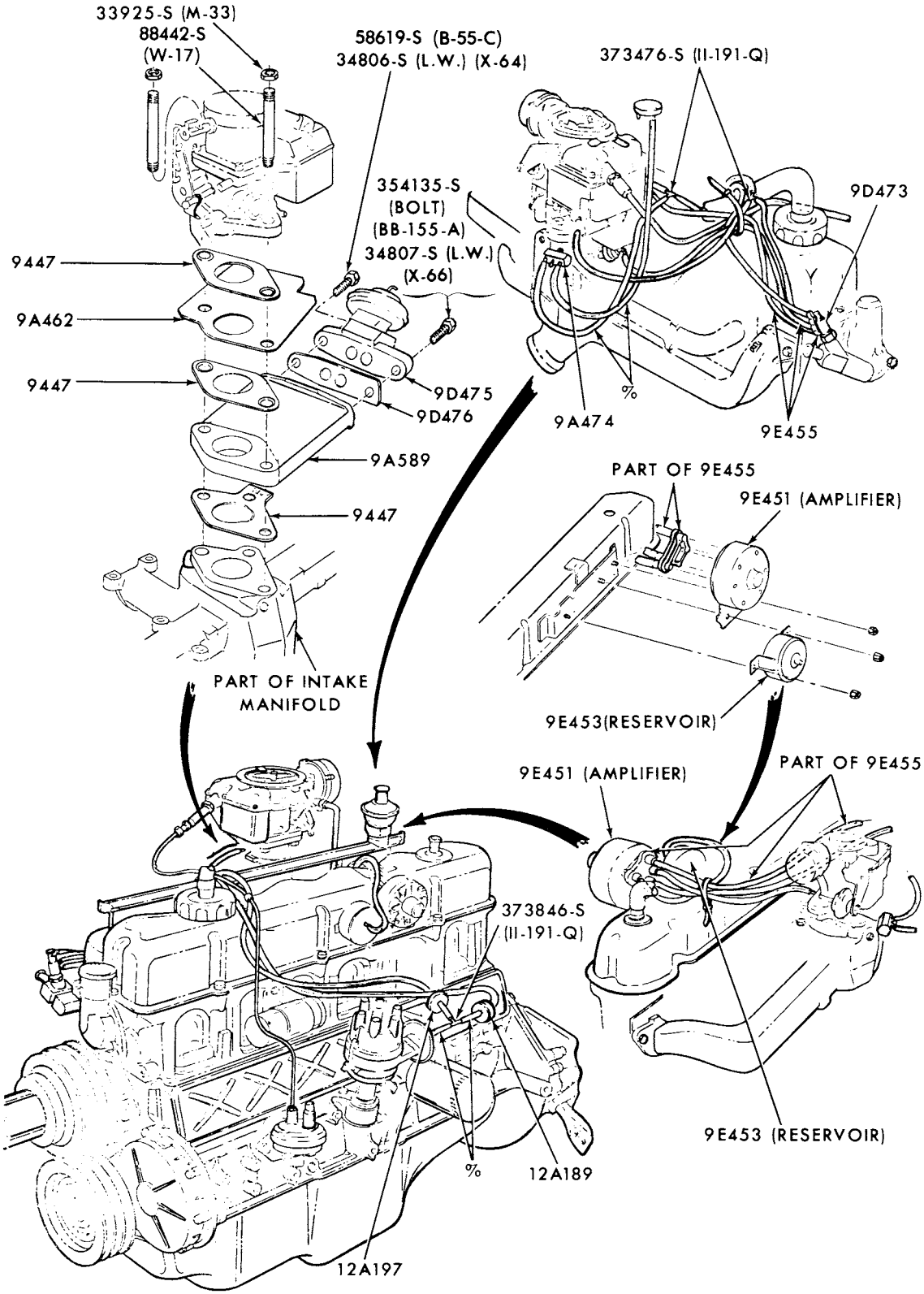

%IMPROVISE FROM BULK HOSE (12226)

P-11351

EMISSION SYSTEM-EXHAUST GAS RECIRCULATION (E.G.R.)
1974 F100, E100/200--6 CYL. 300-with T/E

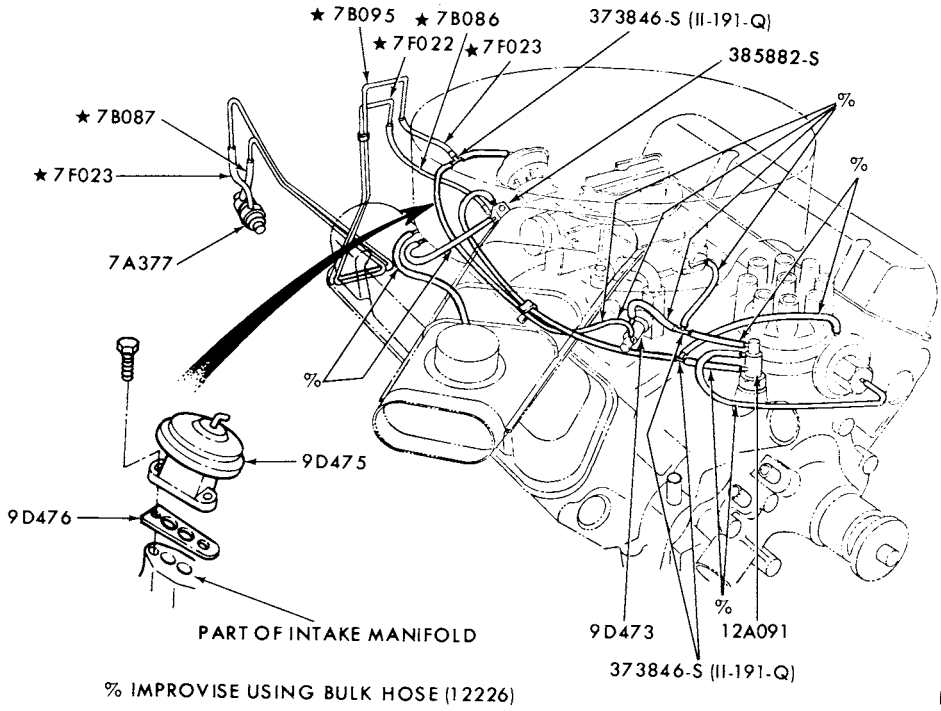

EMISSION SYSTEM-EXHAUST GAS RECIRCULATION (E.G.R.)
1974 E100/300--8 CYL. 302-with A/T without T/E

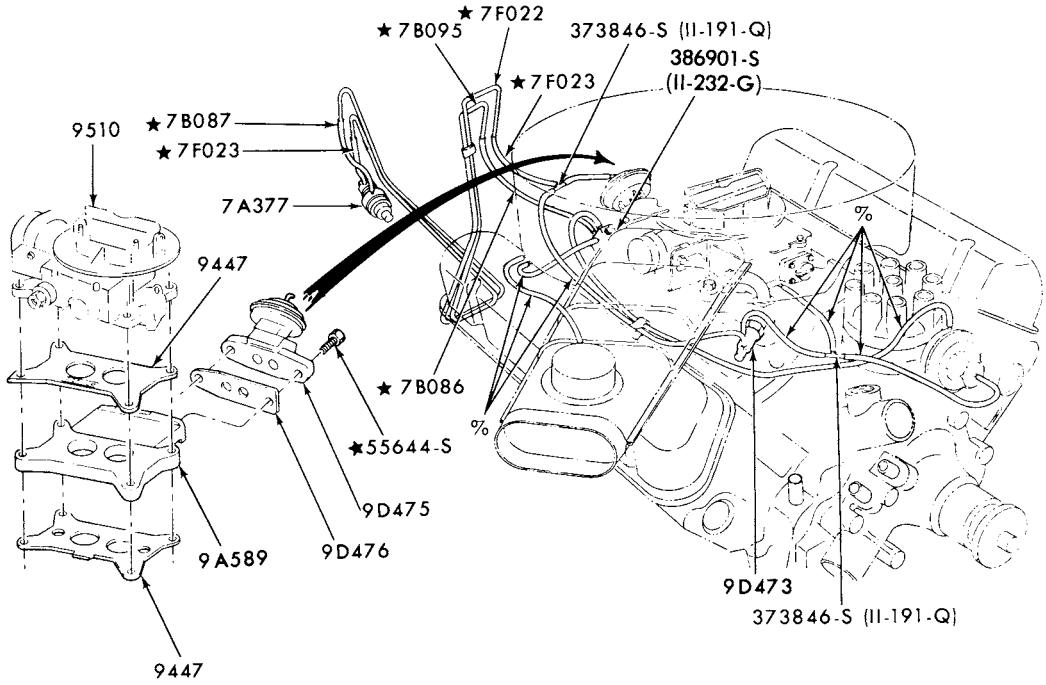

EMISSION SYSTEM-EXHAUST GAS RECIRCULATION (E.G.R.)
1974 F100--8 CYL. 302-with A/T without T/E and/or A/C

COPYRIGHT © 1979 — FORD MOTOR COMPANY, DEARBORN, MICHIGAN

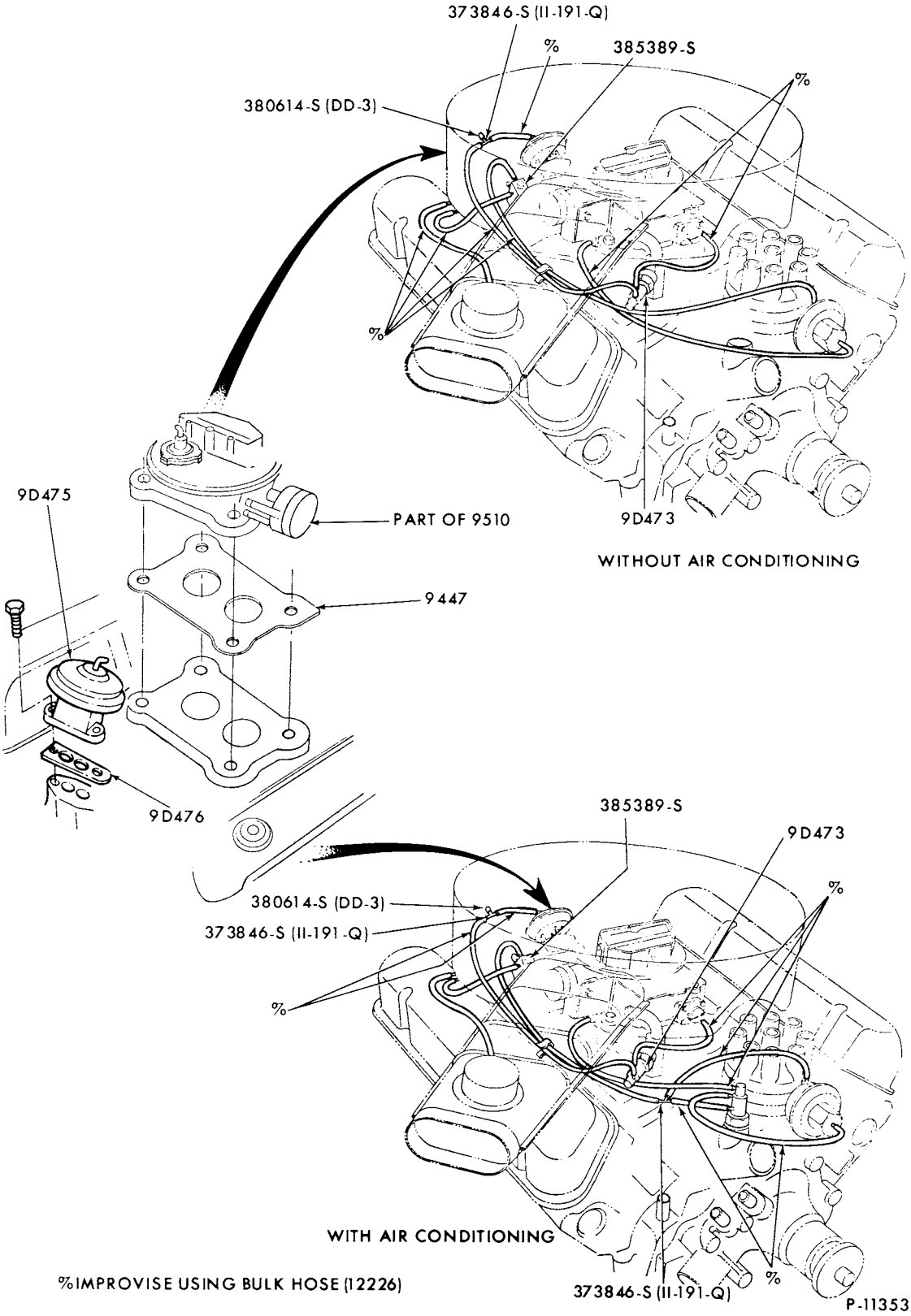

EMISSION SYSTEM-EXHAUST GAS RECIRCULATION (E.G.R.)
1974 E100/300--8 CYL. 302-with M/T without T/E

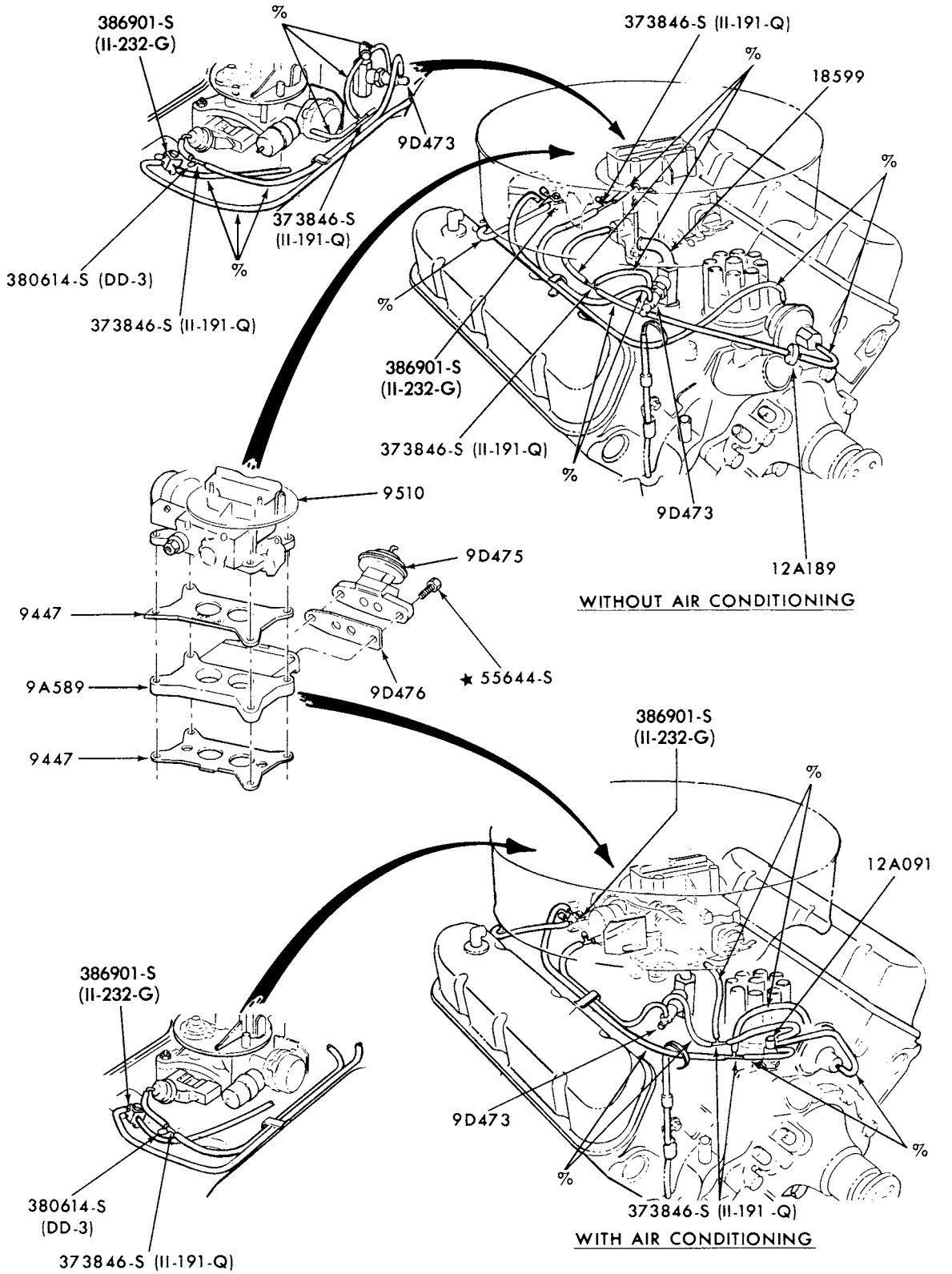

%IMPROVISE FROM BULK HOSE (12226)

P-11355

EMISSION SYSTEM-EXHAUST GAS RECIRCULATION (E.G.R.)
1974 F100--8 CYL. 302-with M/T without T/E

COPYRIGHT © 1979 - FORD MOTOR-DEARBORN, MICHIGAN COMPANY

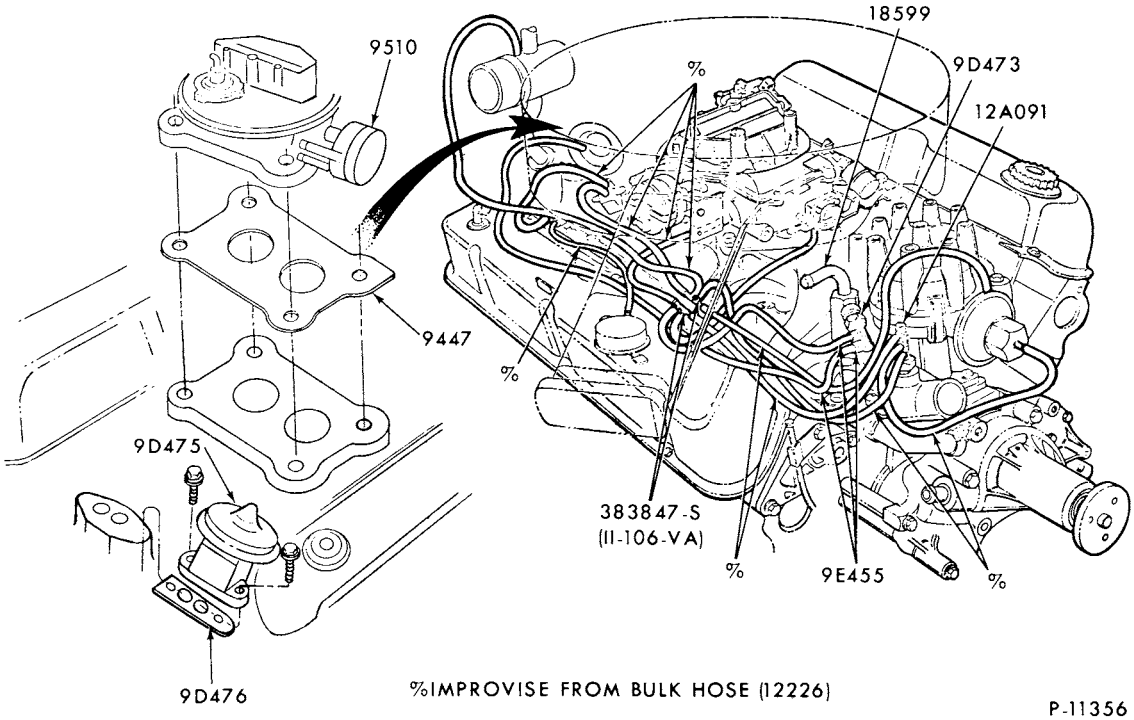

EMISSION SYSTEM-EXHAUST GAS RECIRCULATION (E.G.R.)
1974 E100/200--8 CYL. 302-with M/T, T/E and A/C

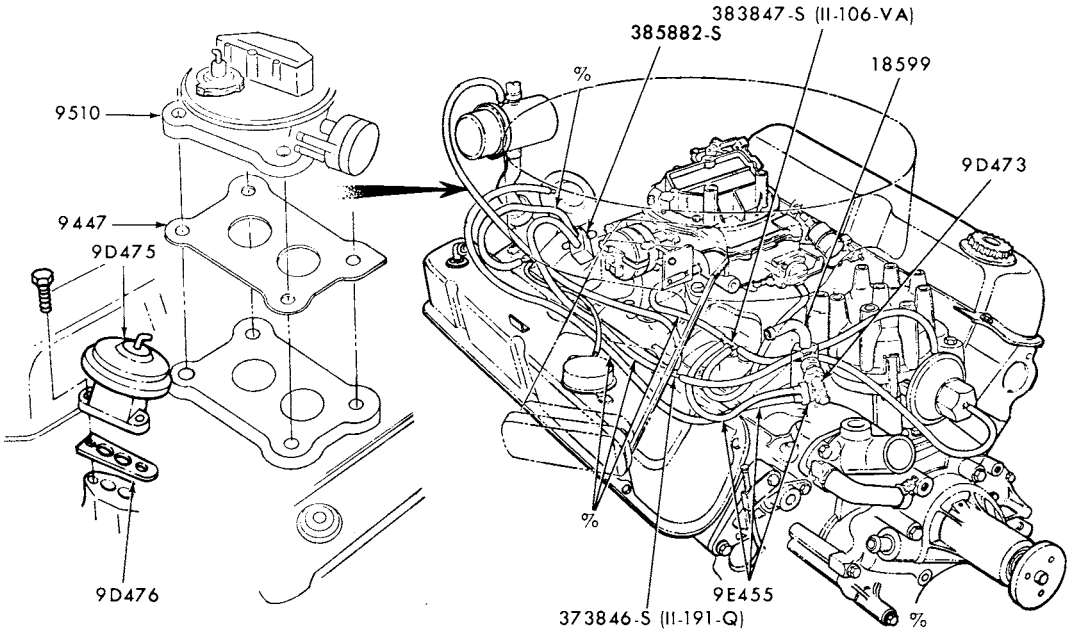

EMISSION SYSTEM-EXHAUST GAS RECIRCULATION (E.G.R.)
1974 E100/200--8 CYL. 302-with M/T and T/E without A/C

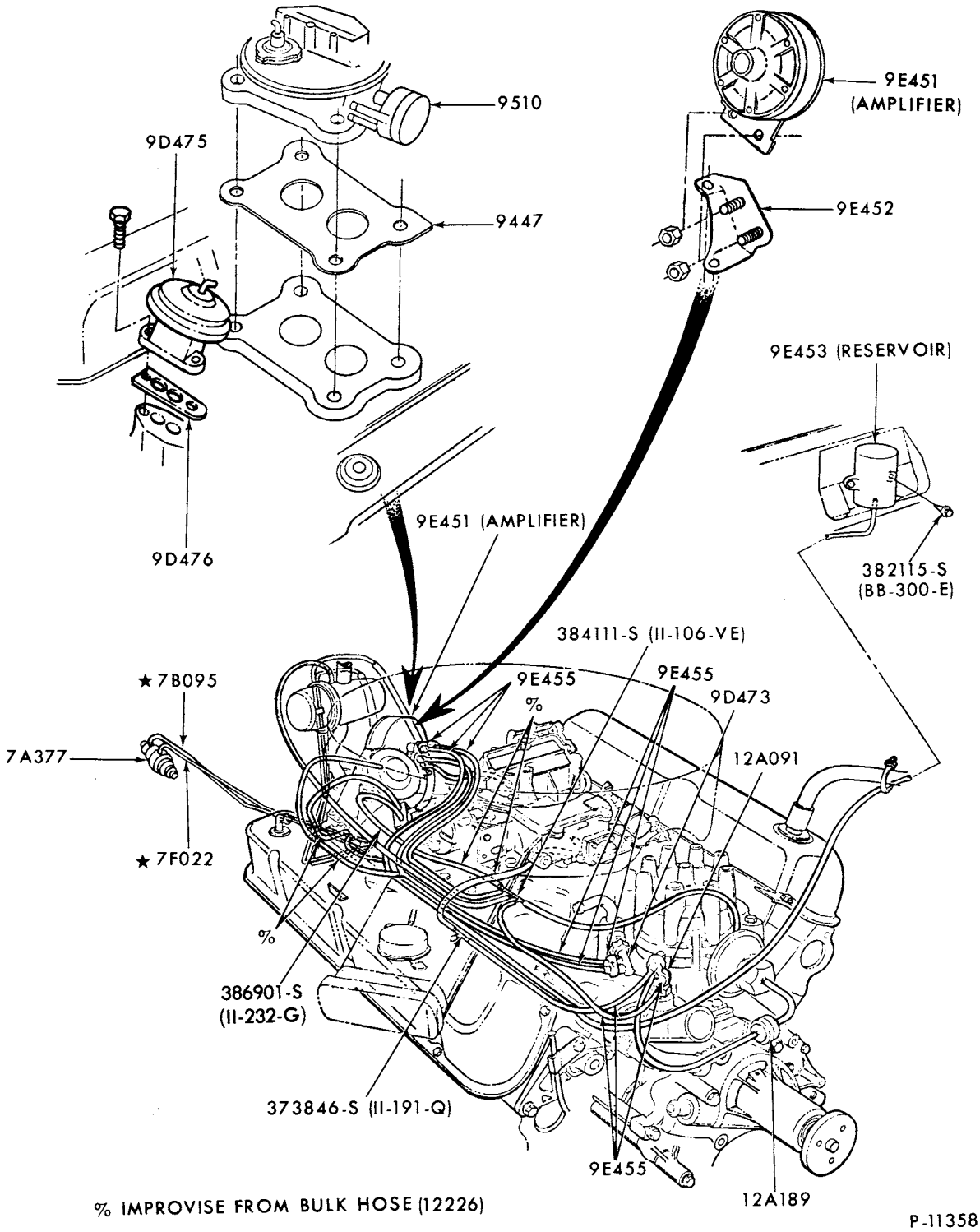

EMISSION SYSTEM-EXHAUST GAS RECIRCULATION (E.G.R.)
1974 E100/200--8 CYL. 302-with A/T and T/E without A/C

COPYRIGHT © 1979 FORD MOTOR COMPANY - DEARBORN, MICHIGAN

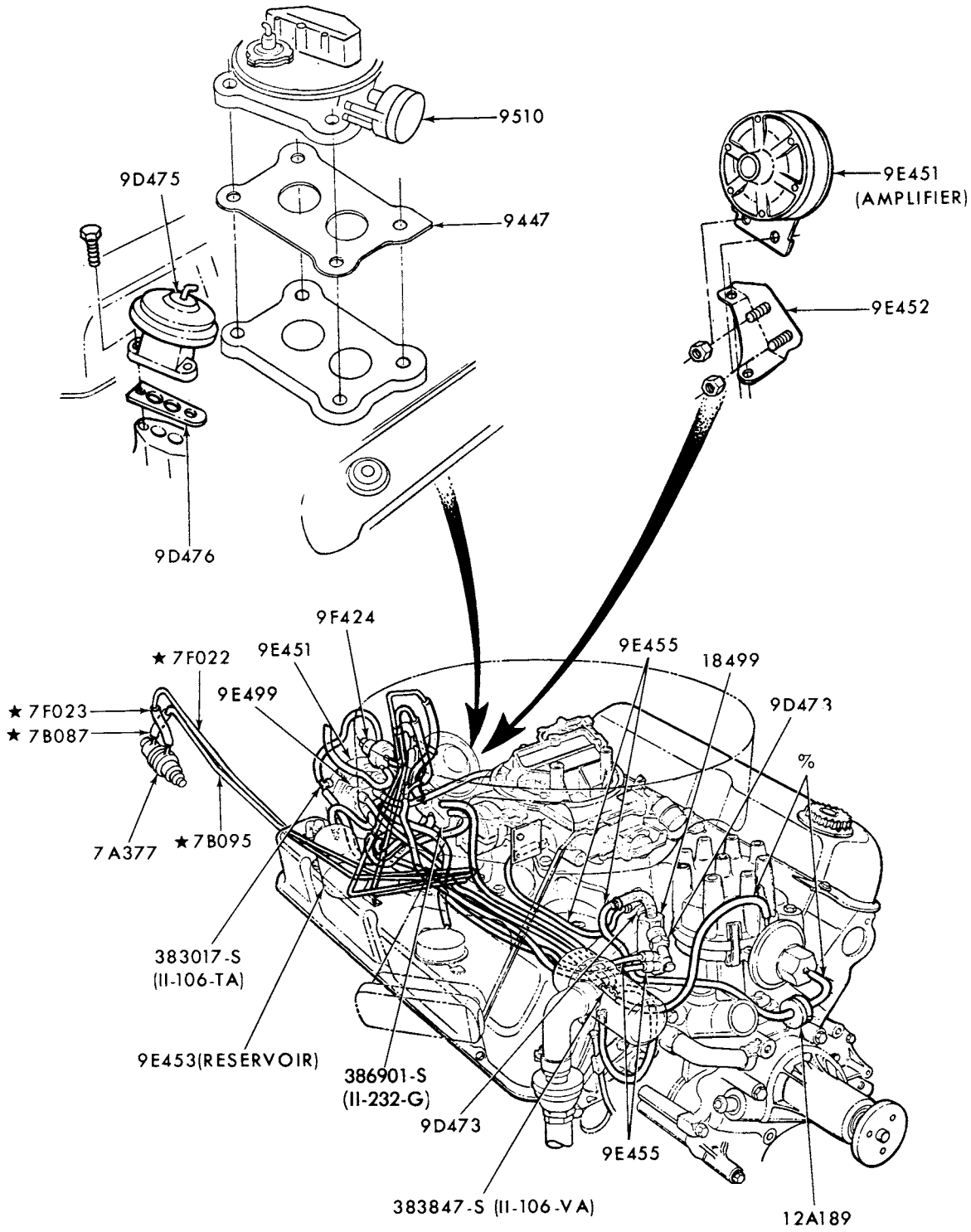

% IMPROVISE FROM BULK HOSE (12226)

P-11359

EMISSION SYSTEM-EXHAUST GAS RECIRCULATION (E.G.R.)
1974 F100--8 CYL. 302-with A/T and T/E without A/C

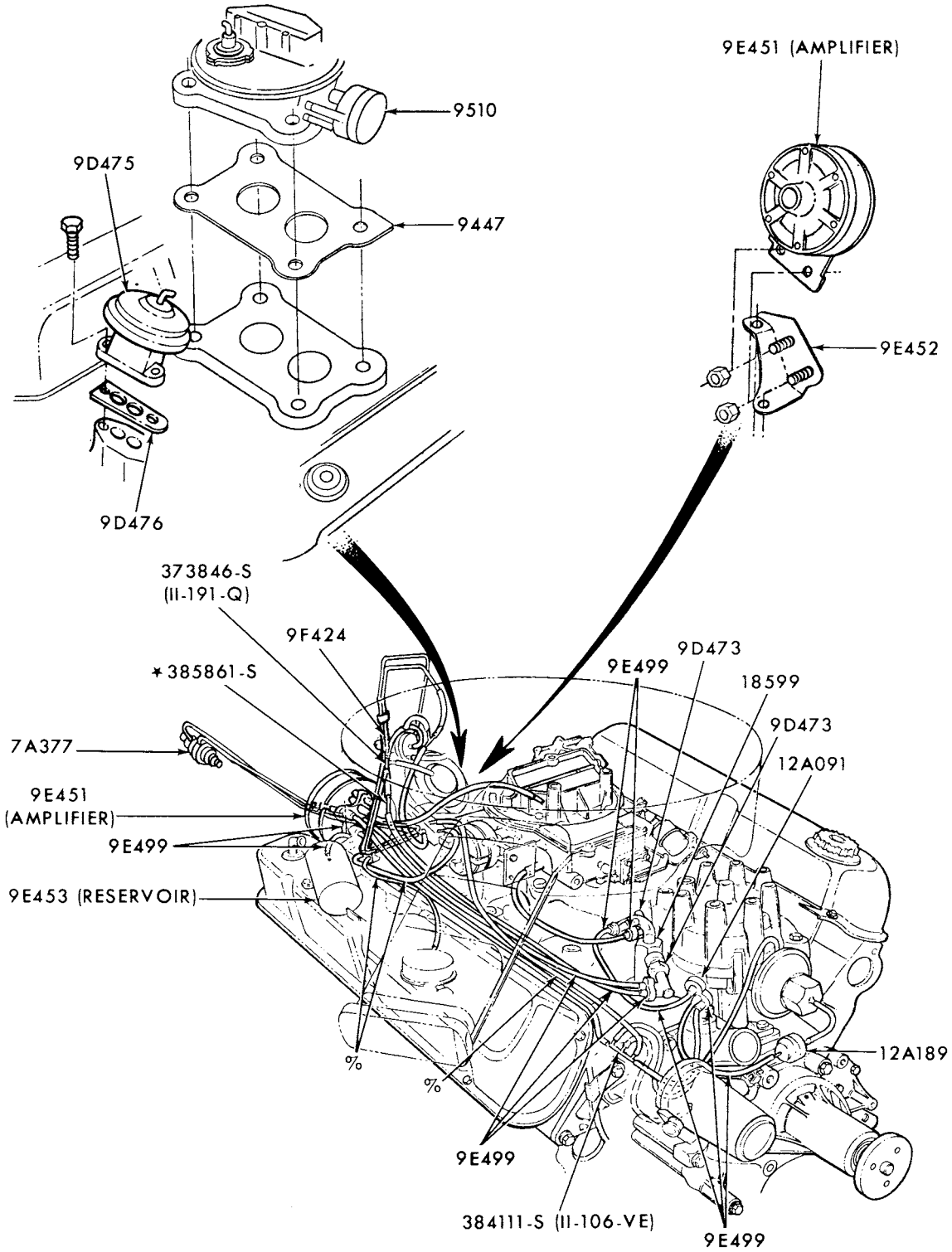

% IMPROVISE FROM BULK HOSE (12226)

P-11360

EMISSION SYSTEM-EXHAUST GAS RECIRCULATION (E.G.R.)
1974 F100--8 CYL. 302-with A/T, T/E and A/C

COPYRIGHT © 1979 FORD MOTOR COMPANY, DEARBORN, MICHIGAN

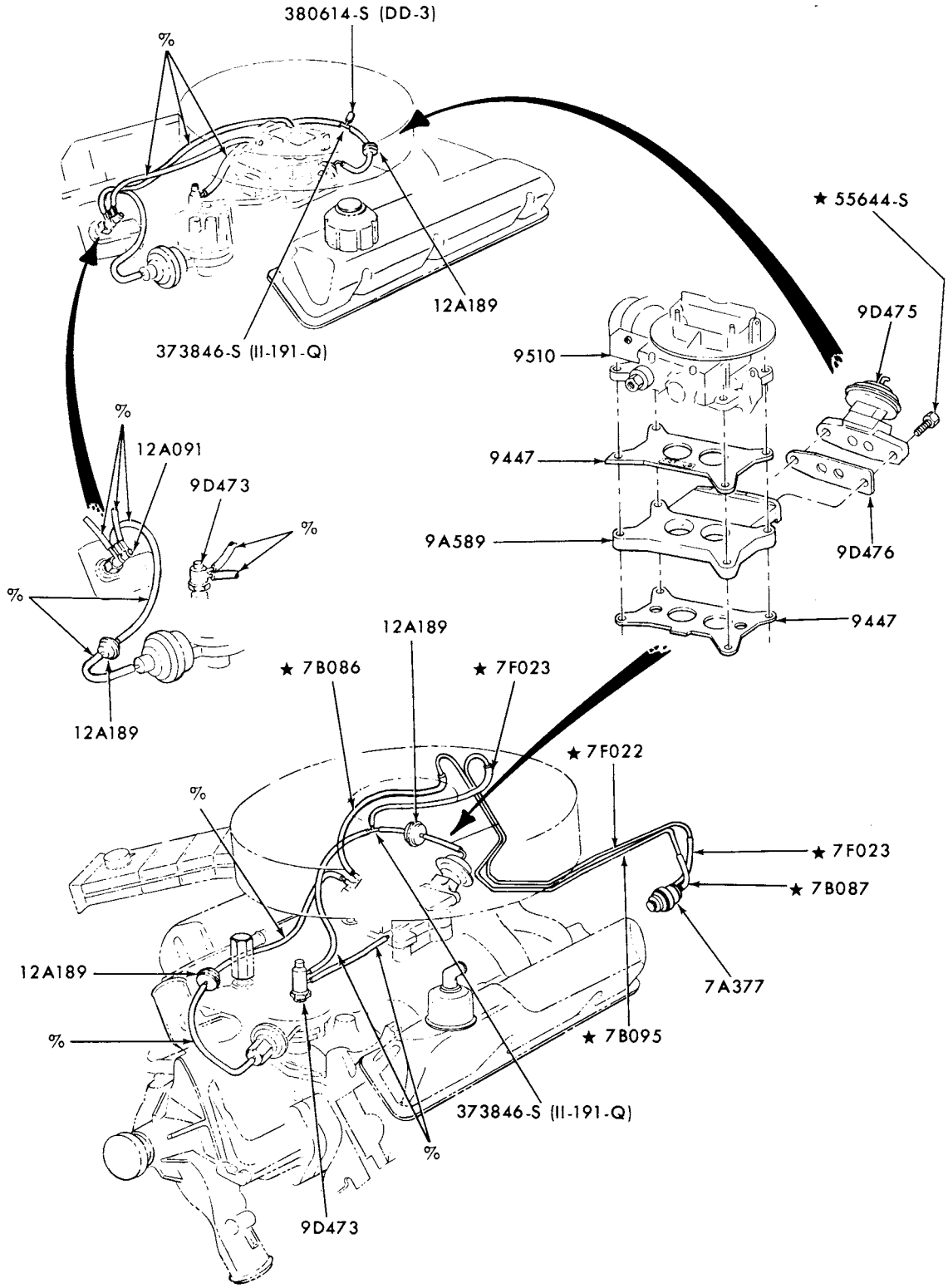

% IMPROVISE FROM BULK HOSE (12226)

P-11361

EMISSION SYSTEM-EXHAUST GAS RECIRCULATION (E.G.R.)
1974 F100--8 CYL. 360 and 390-without T/E

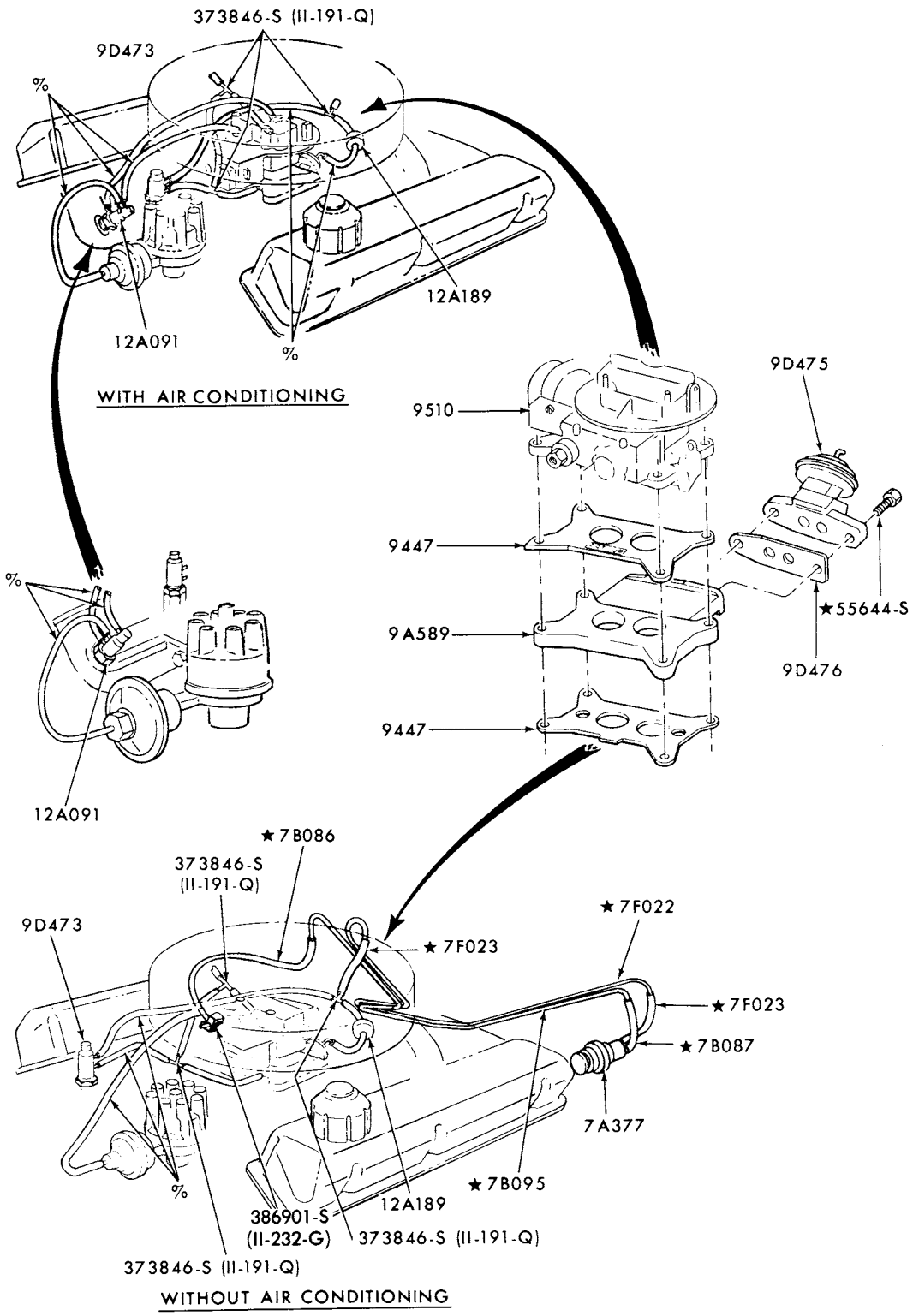

% IMPROVISE FROM BULK HOSE (12226)

P-11362

EMISSION SYSTEM-EXHAUST GAS RECIRCULATION (E.G.R.)
1974 F250/350--8 CYL. 360 and 390-without T/E

COPYRIGHT © 1979 FORD MOTOR COMPANY - DEARBORN, MICHIGAN

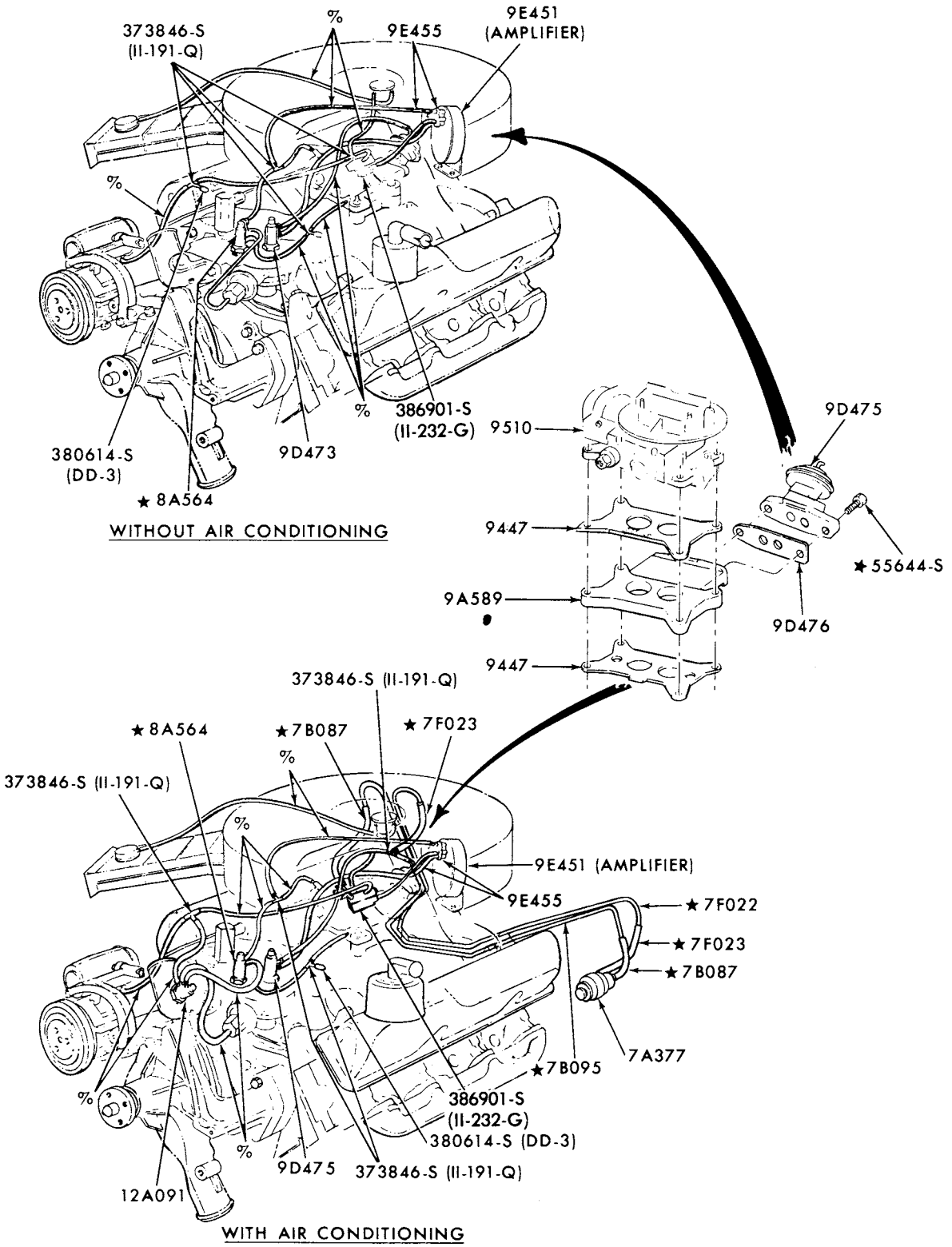

% IMPROVISE FROM BULK HOSE (12226)

P-11364

EMISSION SYSTEM-EXHAUST GAS RECIRCULATION (E.G.R.)
1974 F100--8 CYL. 360-with A/T and T/E

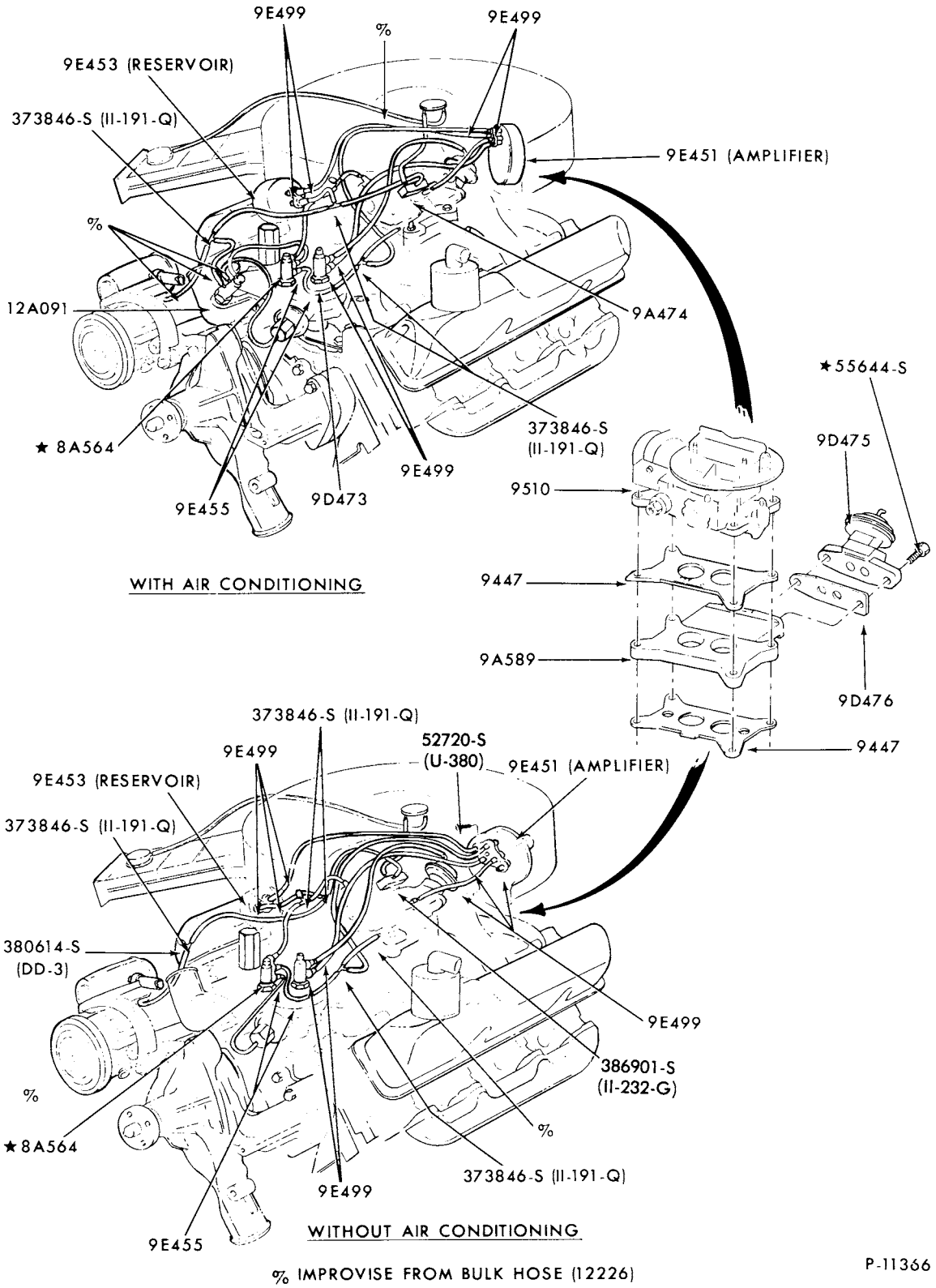

EMISSION SYSTEM-EXHAUST GAS RECIRCULATION (E.G.R.)
1974 F100--8 CYL. 360-with M/T and T/E

COPYRIGHT © 1979 FORD MOTOR COMPANY - DEARBORN, MICHIGAN

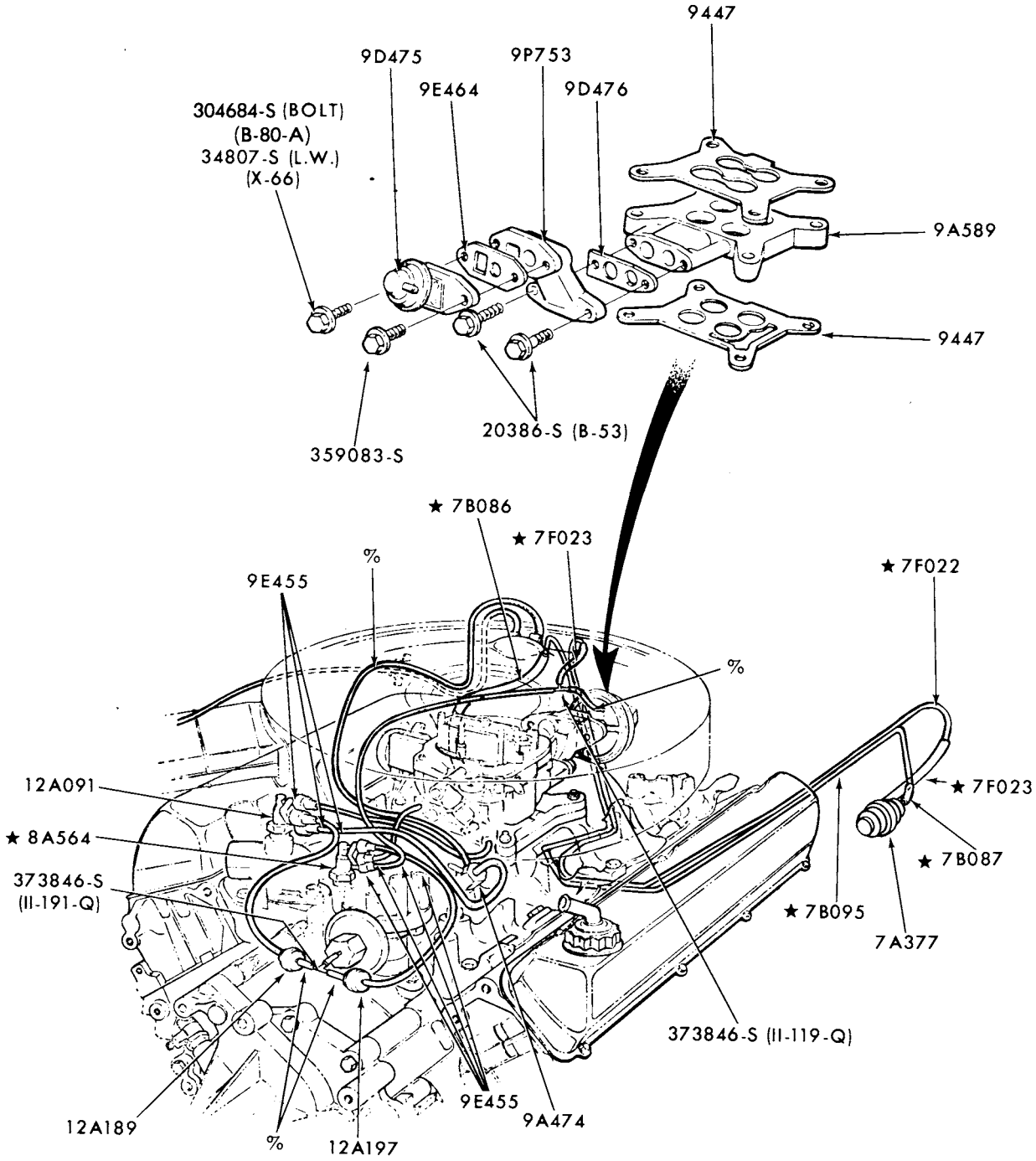

% IMPROVISE FROM BULK HOSE (12226)

P-11368

EMISSION SYSTEM-EXHAUST GAS RECIRCULATION (E.G.R.
1974 F100/350--8 CYL. 460-with A/T

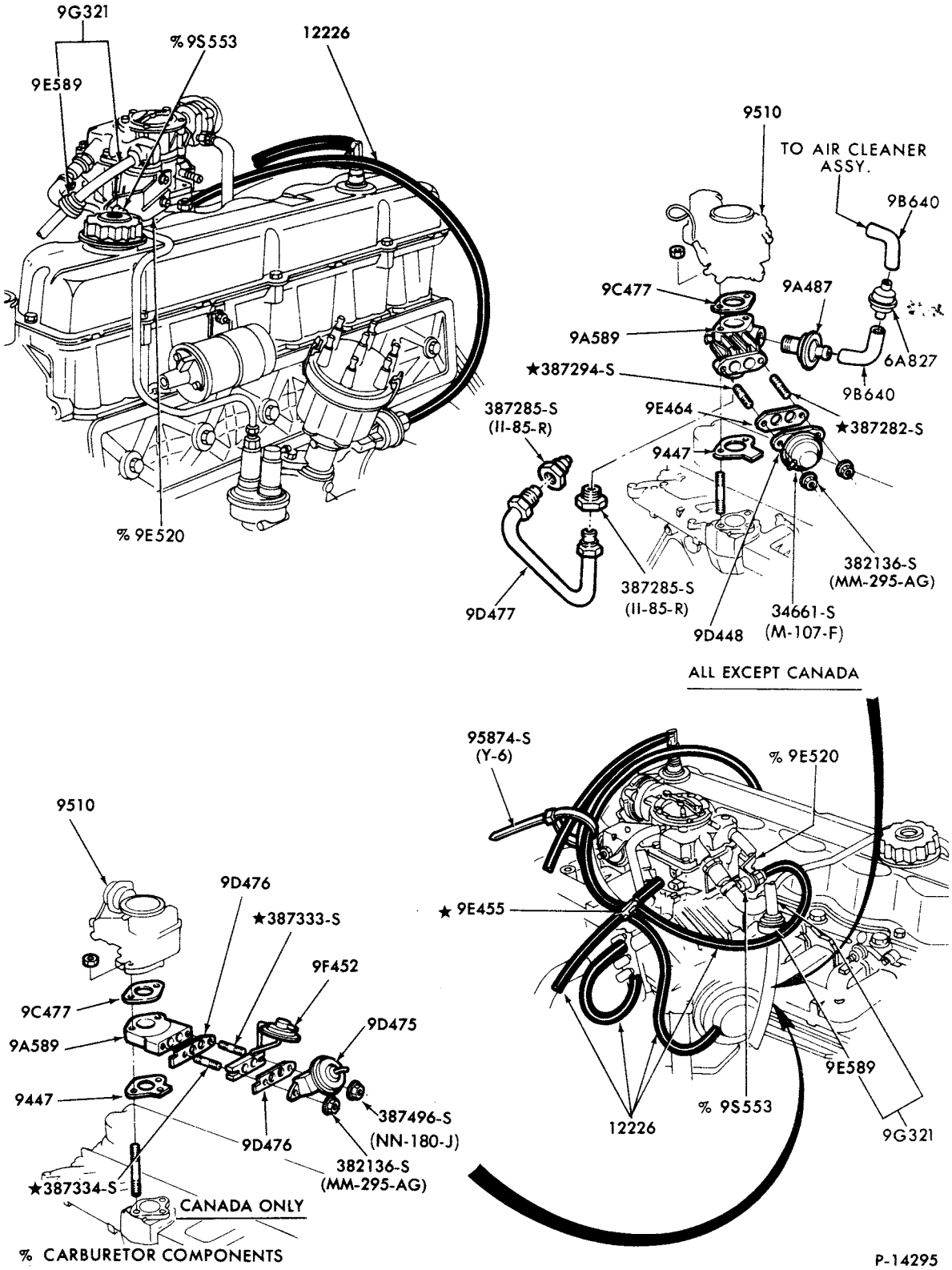

EMISSION SYSTEM - EXHAUST GAS RECIRCULATION (E.G.R.)
1978/ E-F100/350--6 CYL. 300

COPYRIGHT © 1980 FORD MOTOR COMPANY, DEARBORN, MICHIGAN

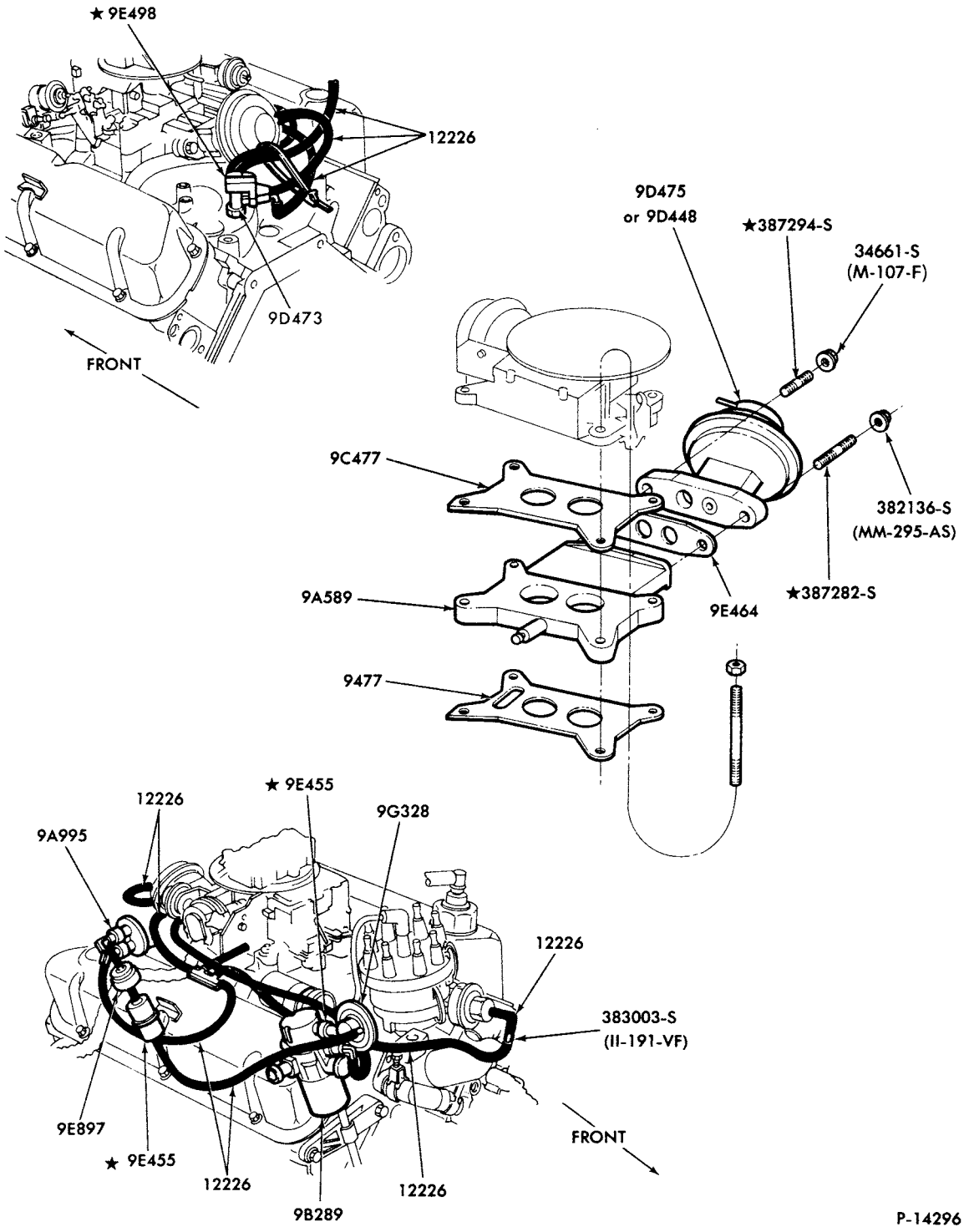

EMISSION SYSTEM - EXHAUST GAS RECIRCULATION (E.G.R.)
1978/ F100--8 CYL. 302-w/THERMACTOR

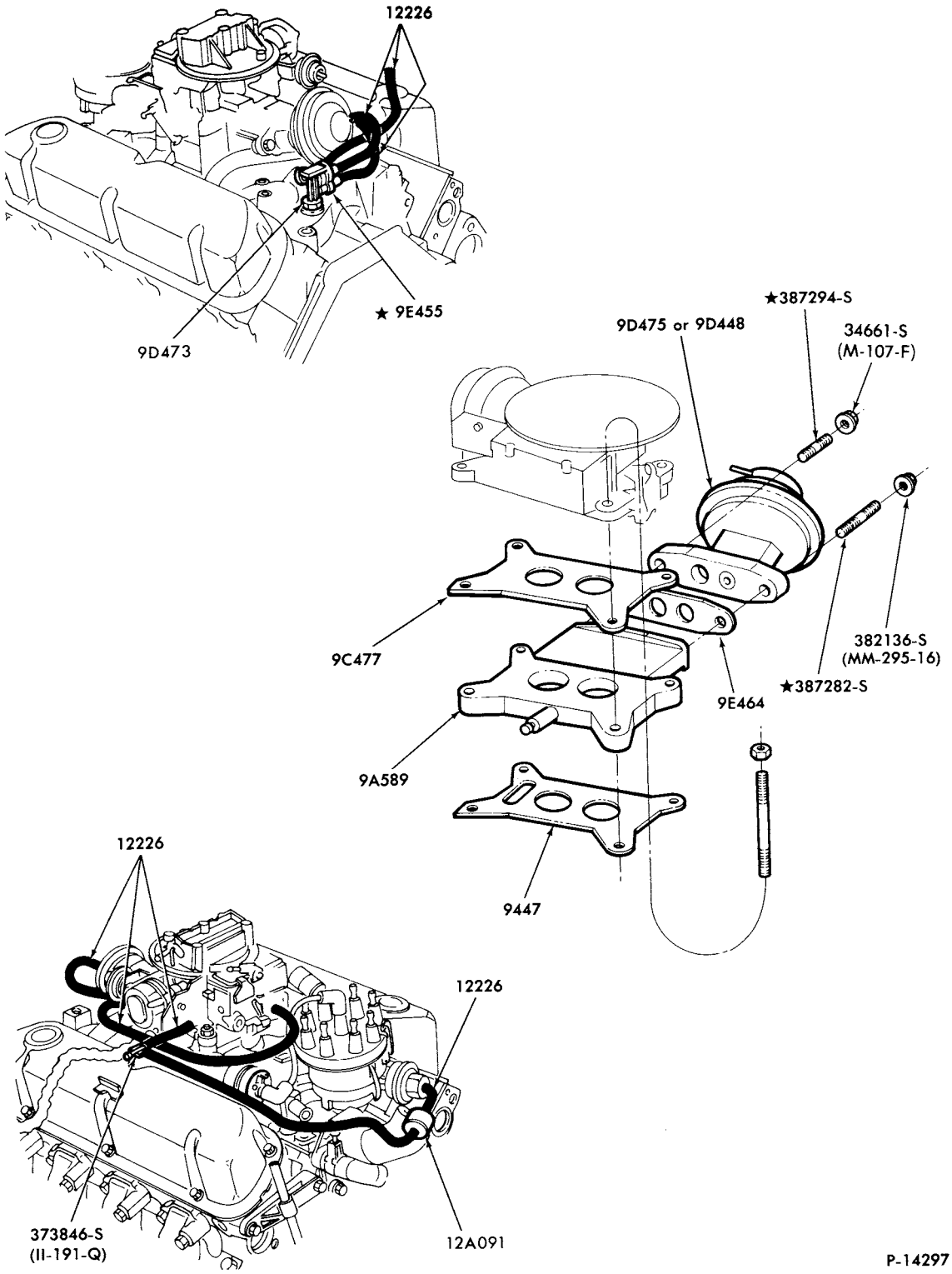

EMISSION SYSTEM - EXHAUST GAS RECIRCULATION (E.G.R.)
1978/ F100--8 CYL. 302-w/o THERMACTOR

COPYRIGHT © 1979 FORD MOTOR COMPANY - DEARBORN, MICHIGAN

1973/79 TRUCK SERIES 100/500

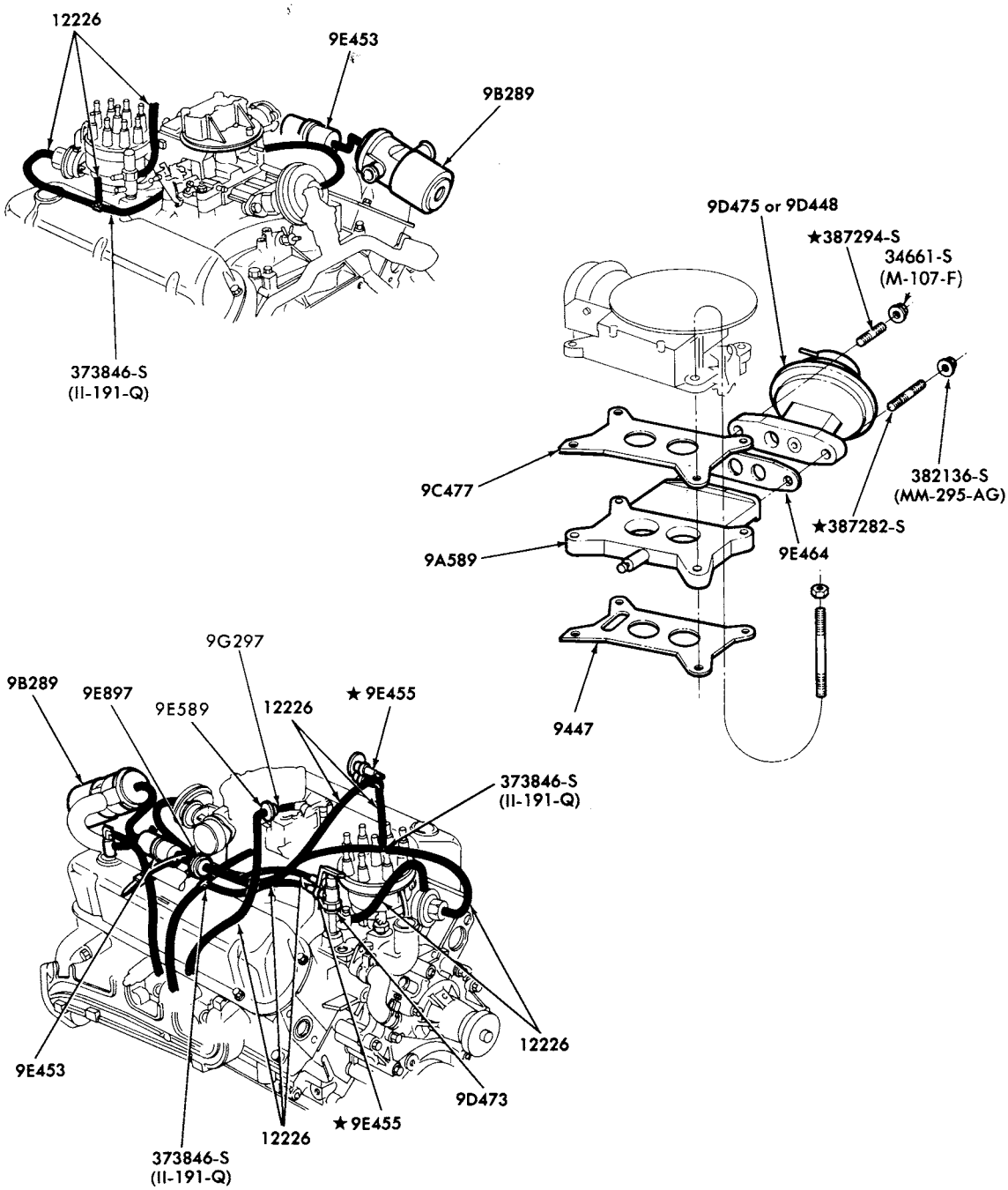

P-14298

EMISSION SYSTEM - EXHAUST GAS RECIRCULATION (E.G.R.)
1978/ E150/250--8 CYL. 351W-CALIF. ONLY
1978/ E100--8 CYL. 351W-EXC. CALIF.

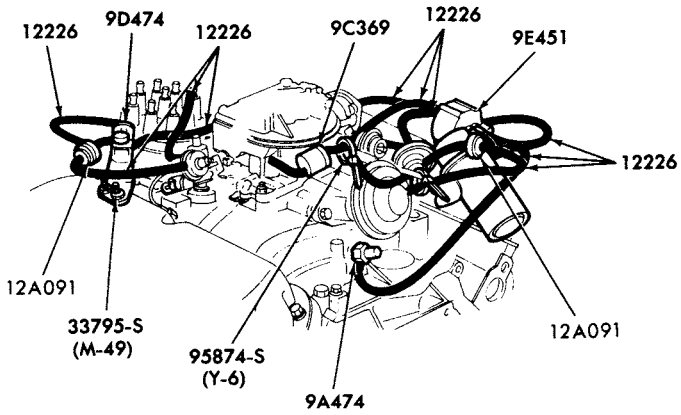

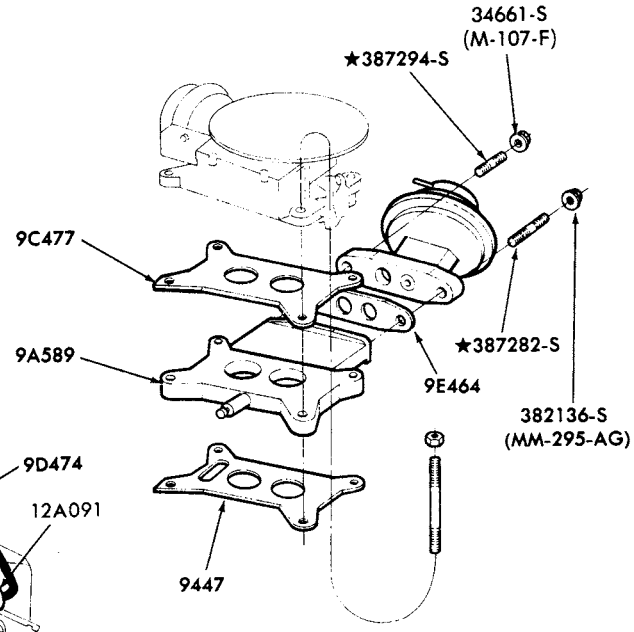

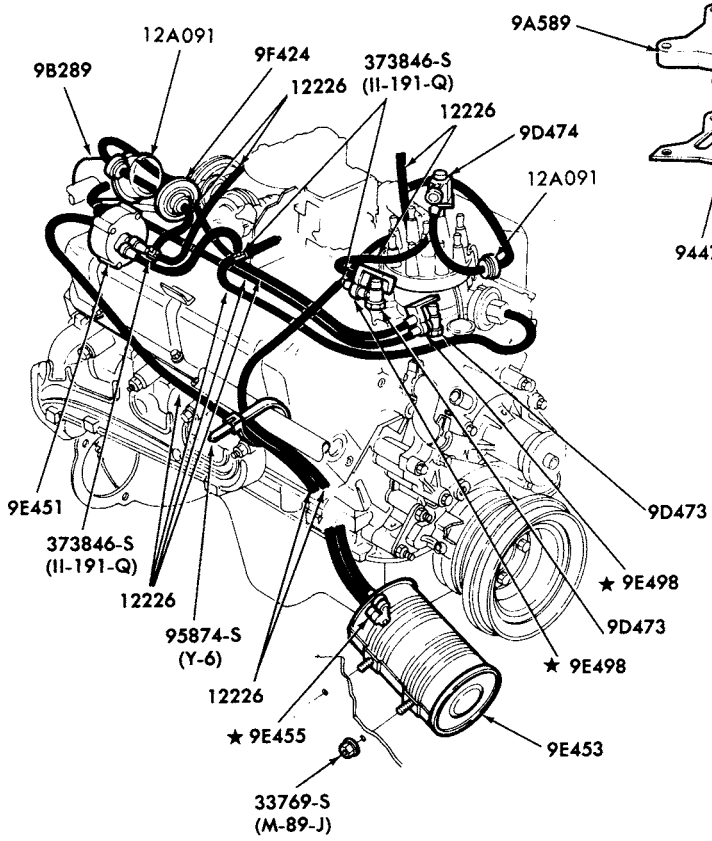

P-14299

EMISSION SYSTEM - EXHAUST GAS RECIRCULATION (E.G.R.)
1977 E150/350--8 CYL. 351W-CALIF. ONLY
1977/ E350--8 CYL. 351W-CALIF. ONLY

COPYRIGHT © 1980— FORD MOTOR COMPANY —DEARBORN, MICHIGAN

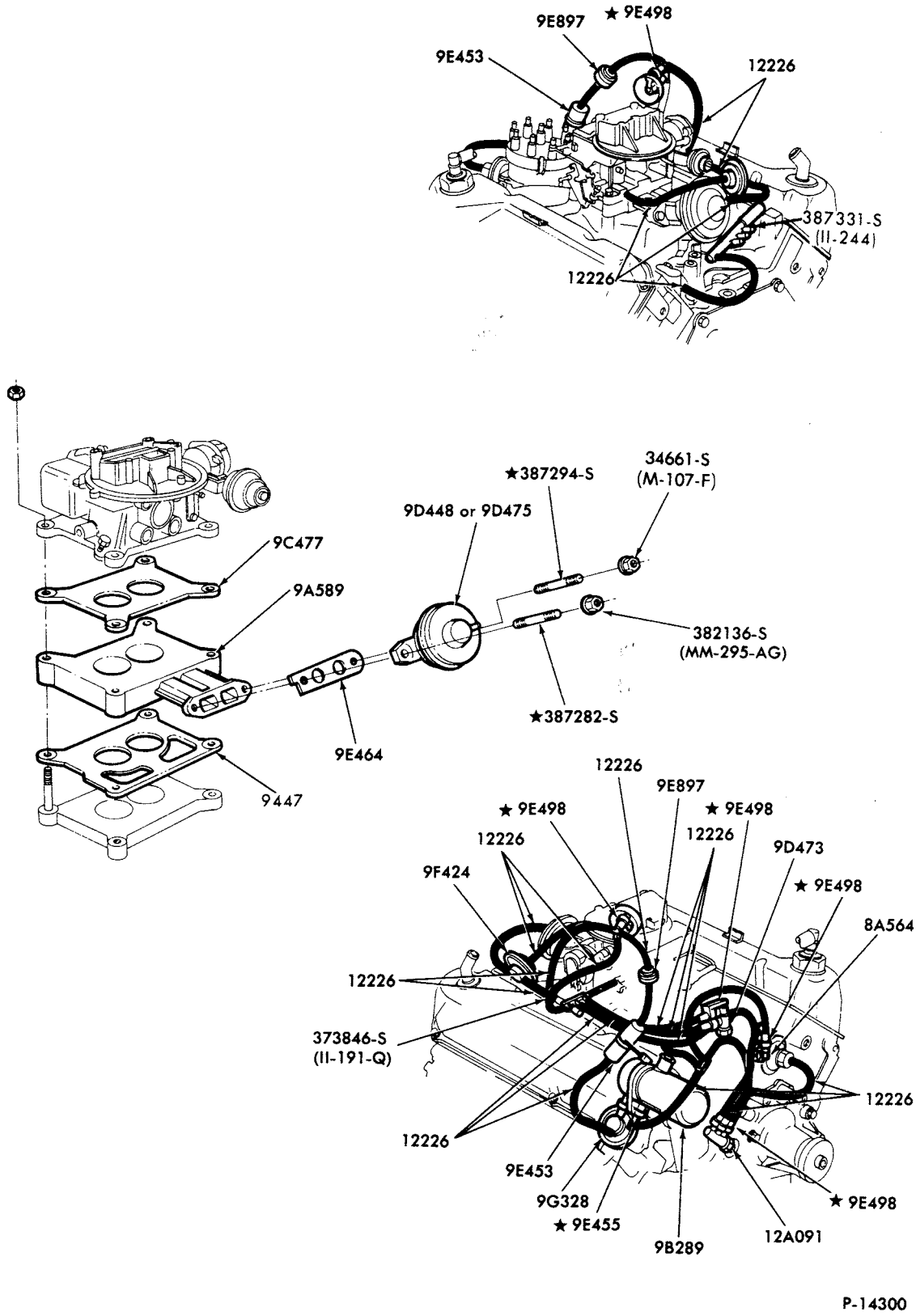

EMISSION SYSTEM - EXHAUST GAS RECIRCULATION (E.G.R.)
1978/ F150/250--8 CYL. 351M and 400-CALIF. ONLY

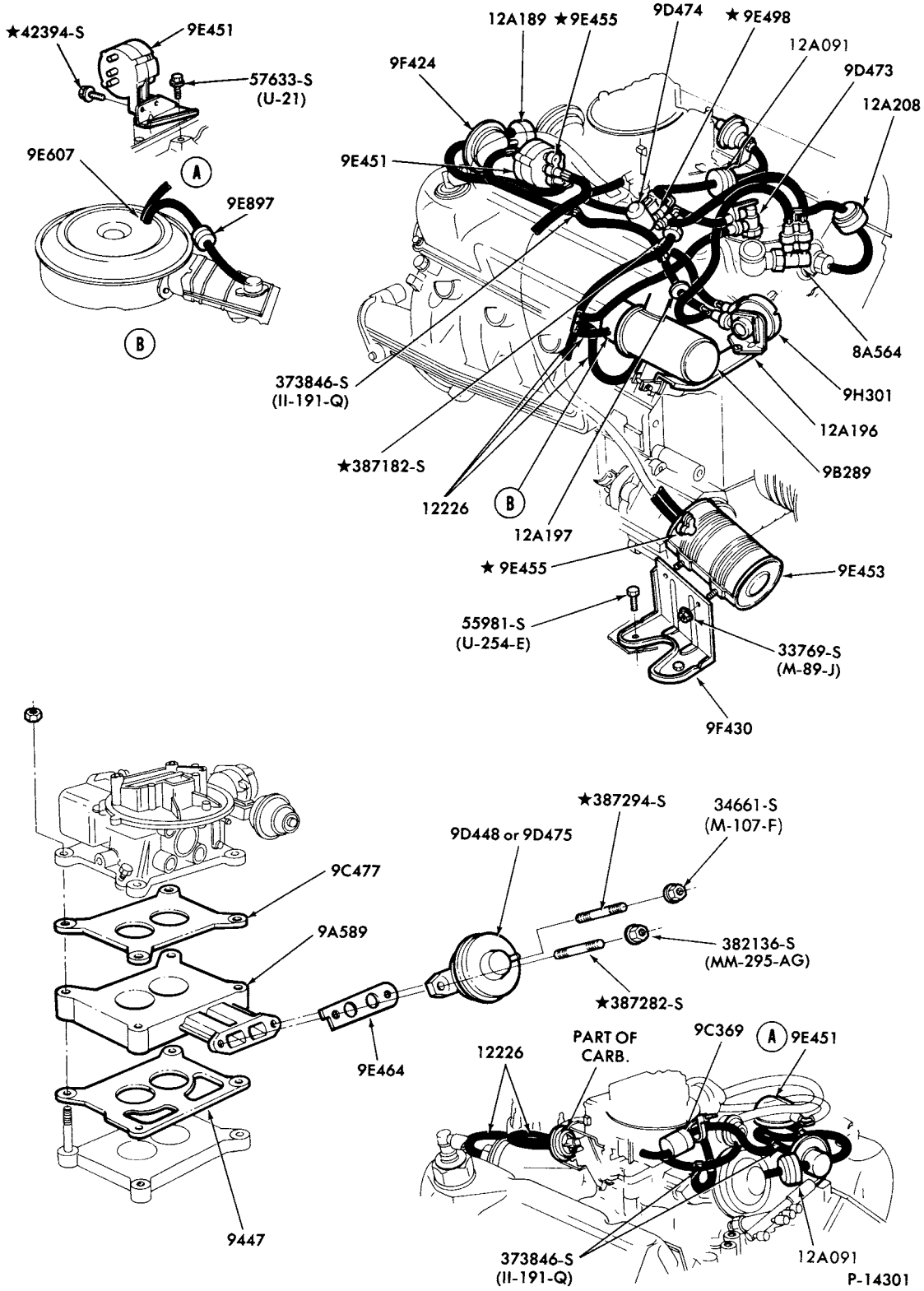

EMISSION SYSTEM - EXHAUST GAS RECIRCULATION (E.G.R.)
1977 F150/350--8 CYL. 351M and 400-CALIF. ONLY
1978/ F350--8 CYL. 351M and 400-CALIF. ONLY

COPYRIGHT © 1980— FORD MOTOR COMPANY —DEARBORN, MICHIGAN

1973/79 TRUCK SERIES 100/500

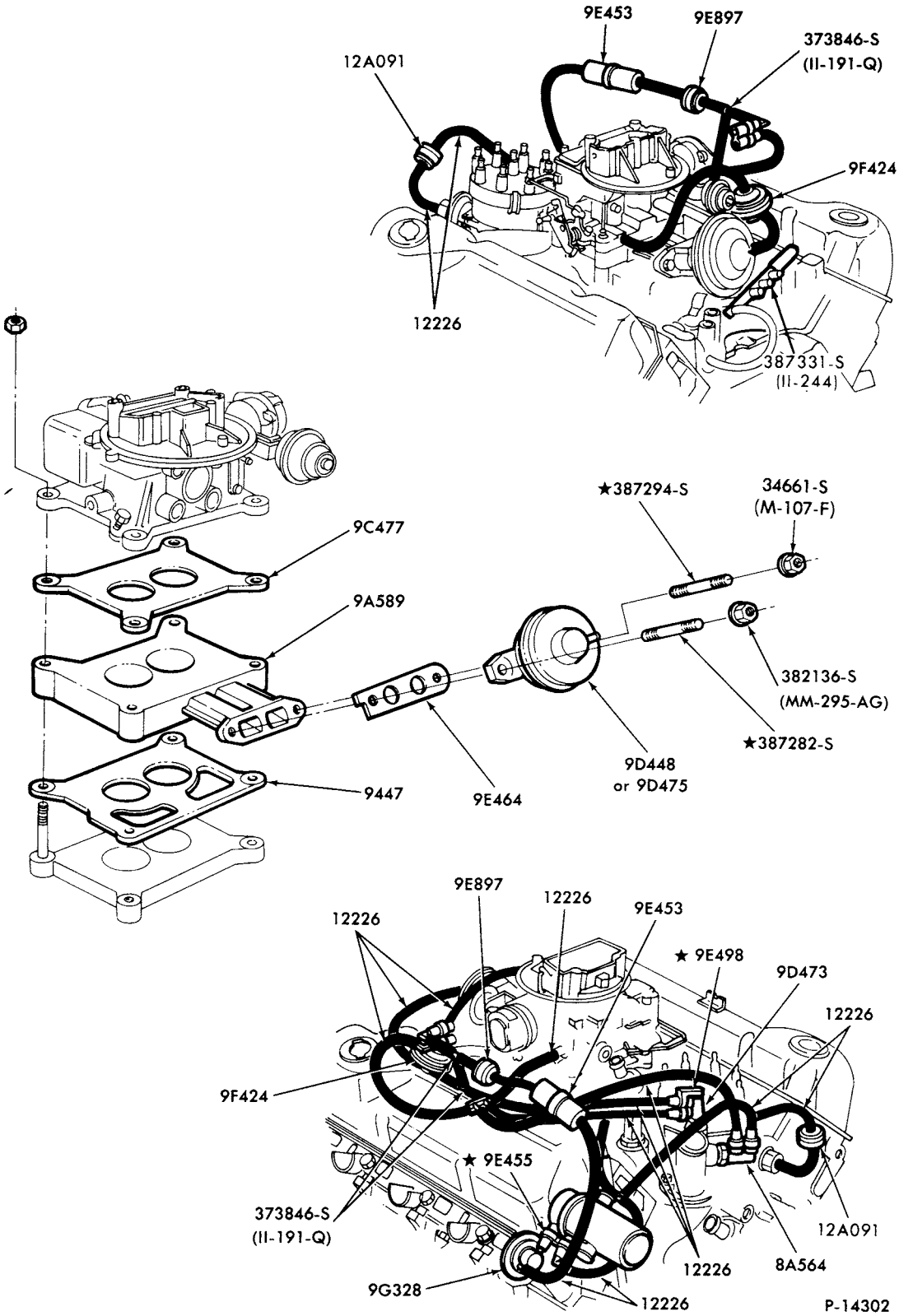

EMISSION SYSTEM - EXHAUST GAS RECIRCULATION (E.G.R.)
1978/ F100--8 CYL. 351M and 400

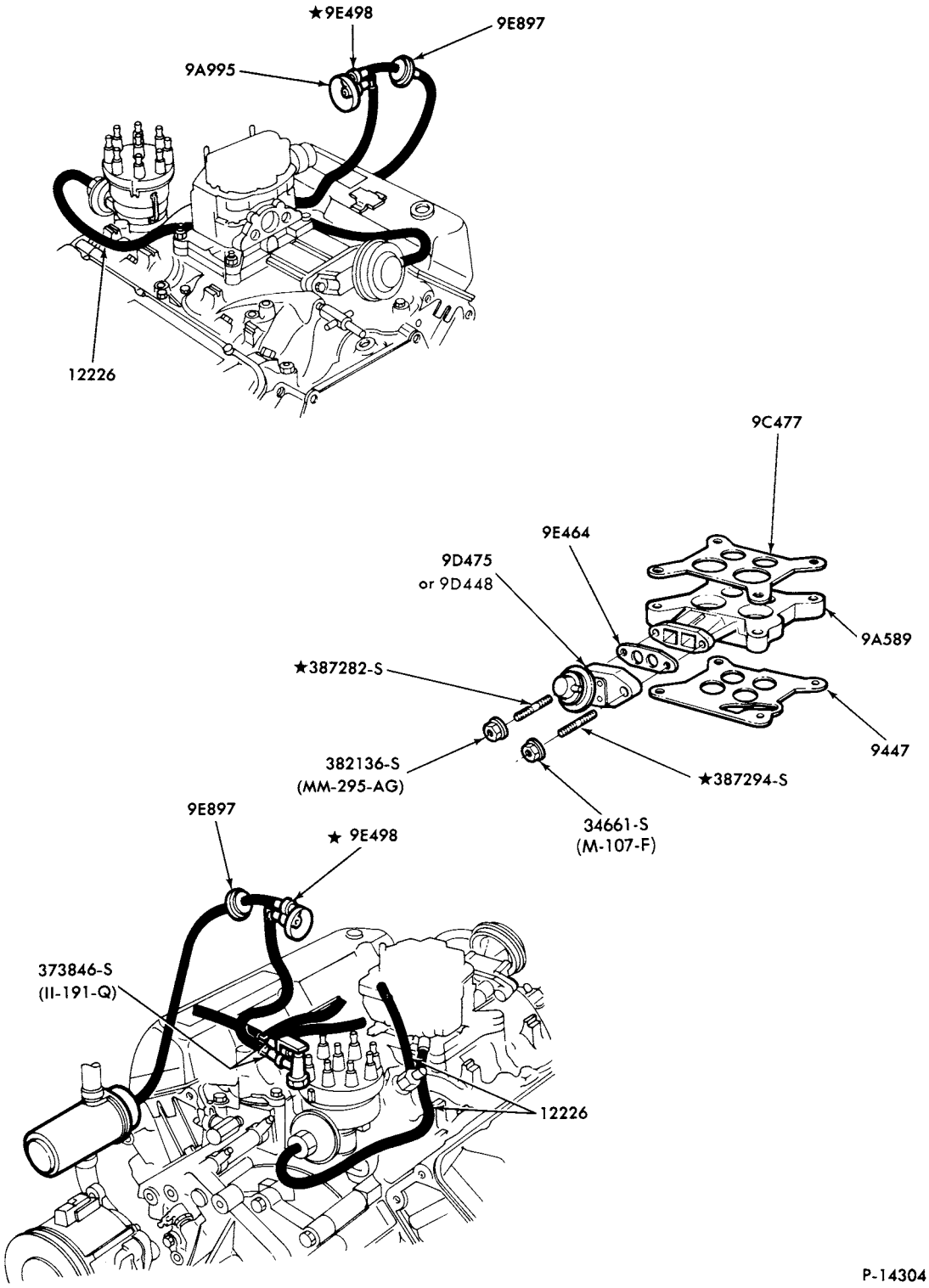

EMISSION SYSTEM-EXHAUST GAS RECIRCULATION (E.G.R.)
1978/ E250/350 and F150/350--8 CYL. 460

COPYRIGHT © 1979 FORD MOTOR-DEARBORN, MICHIGAN COMPANY

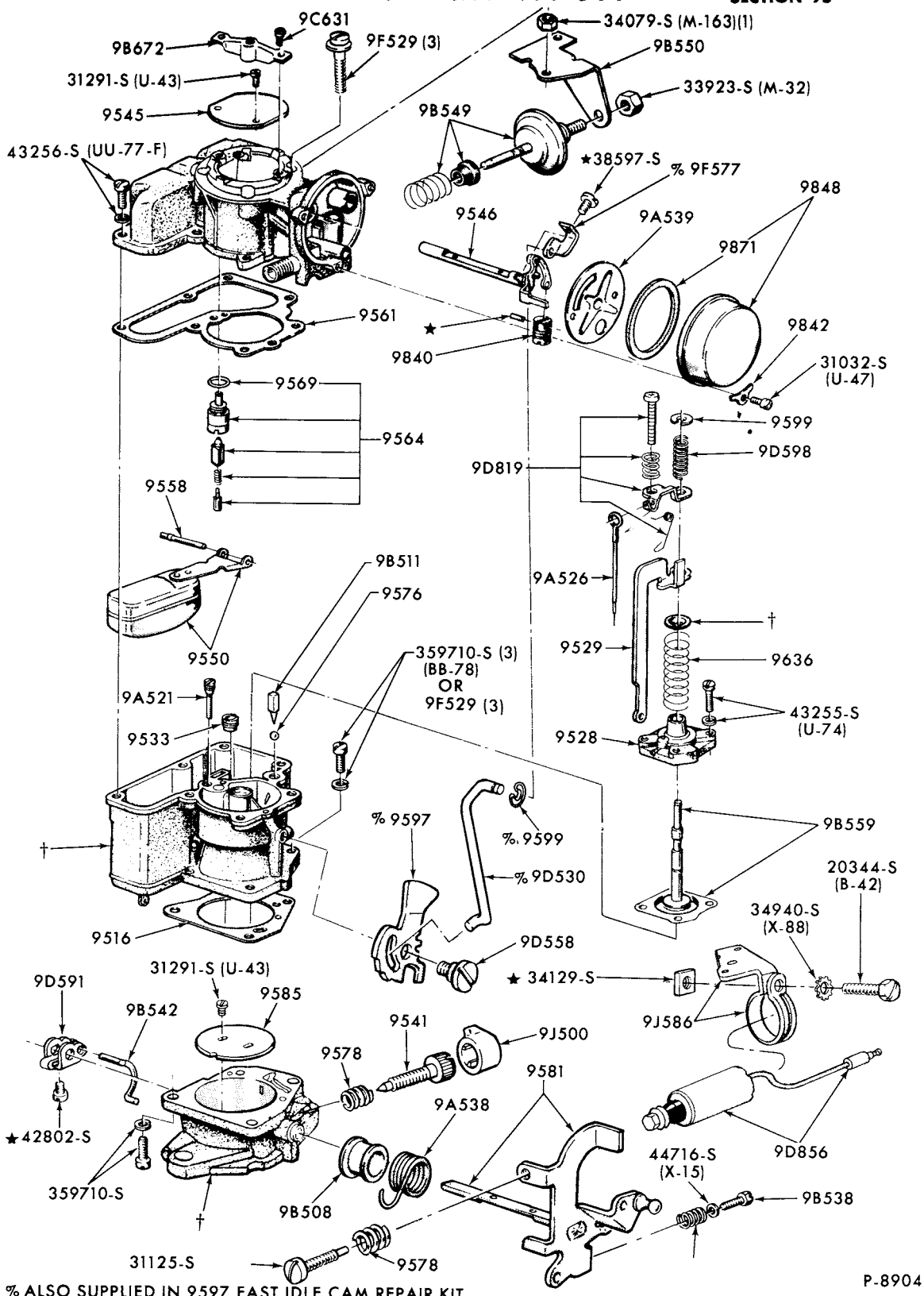

% ALSO SUPPLIED IN 9597 FAST IDLE CAM REPAIR KIT
† SUPPLIED ONLY IN 9510 CARBURETOR ASSEMBLY

CARBURETOR-CARTER 1 BARREL (THERMOSTATIC CHOKE)
1973/76 E100/300, F100/350--6 CYL. 240 and 300
1977/ E150/350, F150/350--6 CYL. 300

COPYRIGHT © 1979 - FORD MOTOR COMPANY - DEARBORN, MICHIGAN

1973/79 TRUCK SERIES 100/500

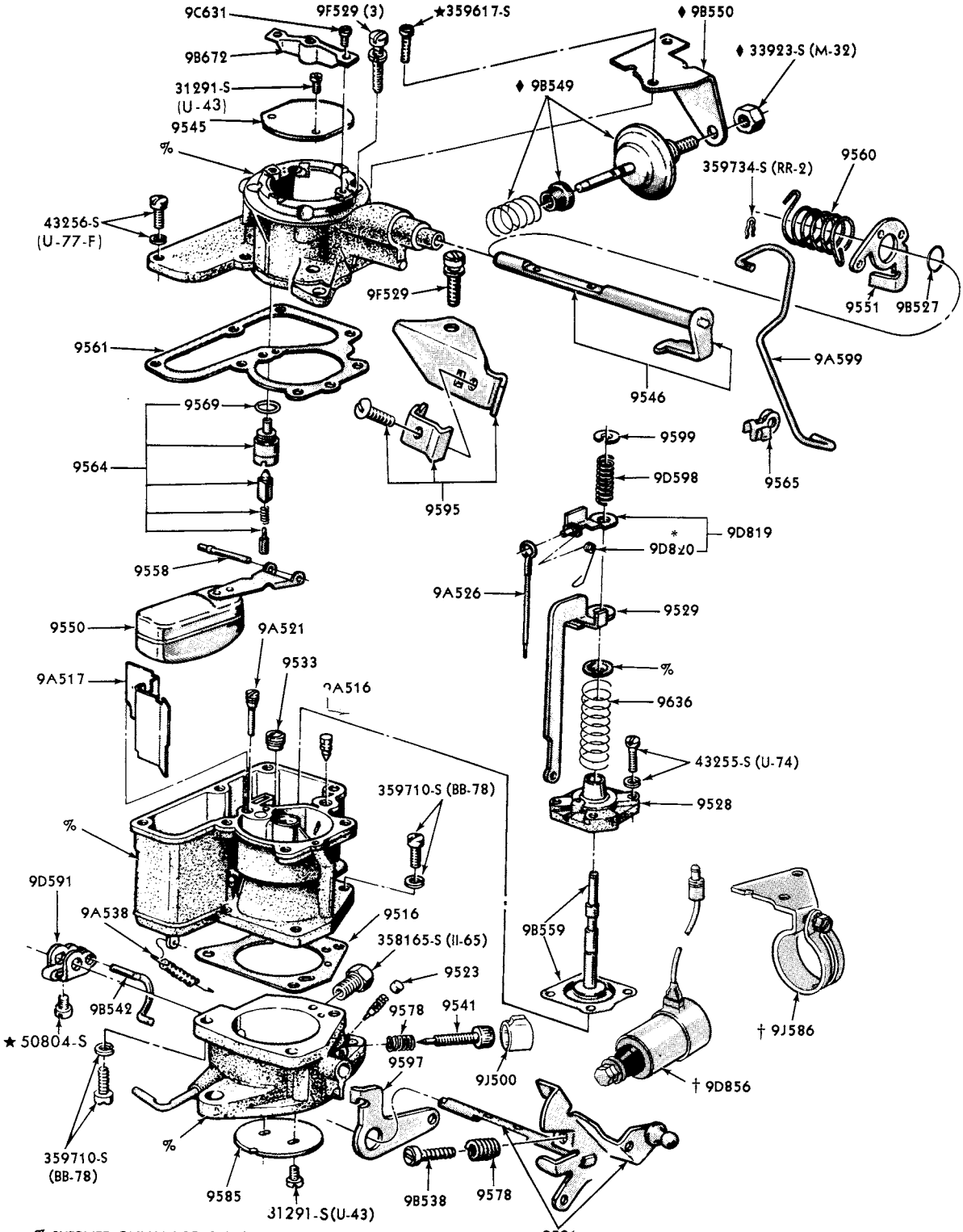

% SUPPLIED ONLY IN 9510 CARBURETOR ASSEMBLY
† USED 6 CYLINDER 240 ENGINE ONLY WHEN 9B549 DASHPOT IS NOT INSTALLED
♦ USED WHEN 9D856 SOLENOID IS NOT INSTALLED

P-6530

CARBURETOR-CARTER 1 BARREL (MANUAL CHOKE)
1973/77 B-F500--6 CYL. 300 and 1973/77 P350/500--6 CYL. 300

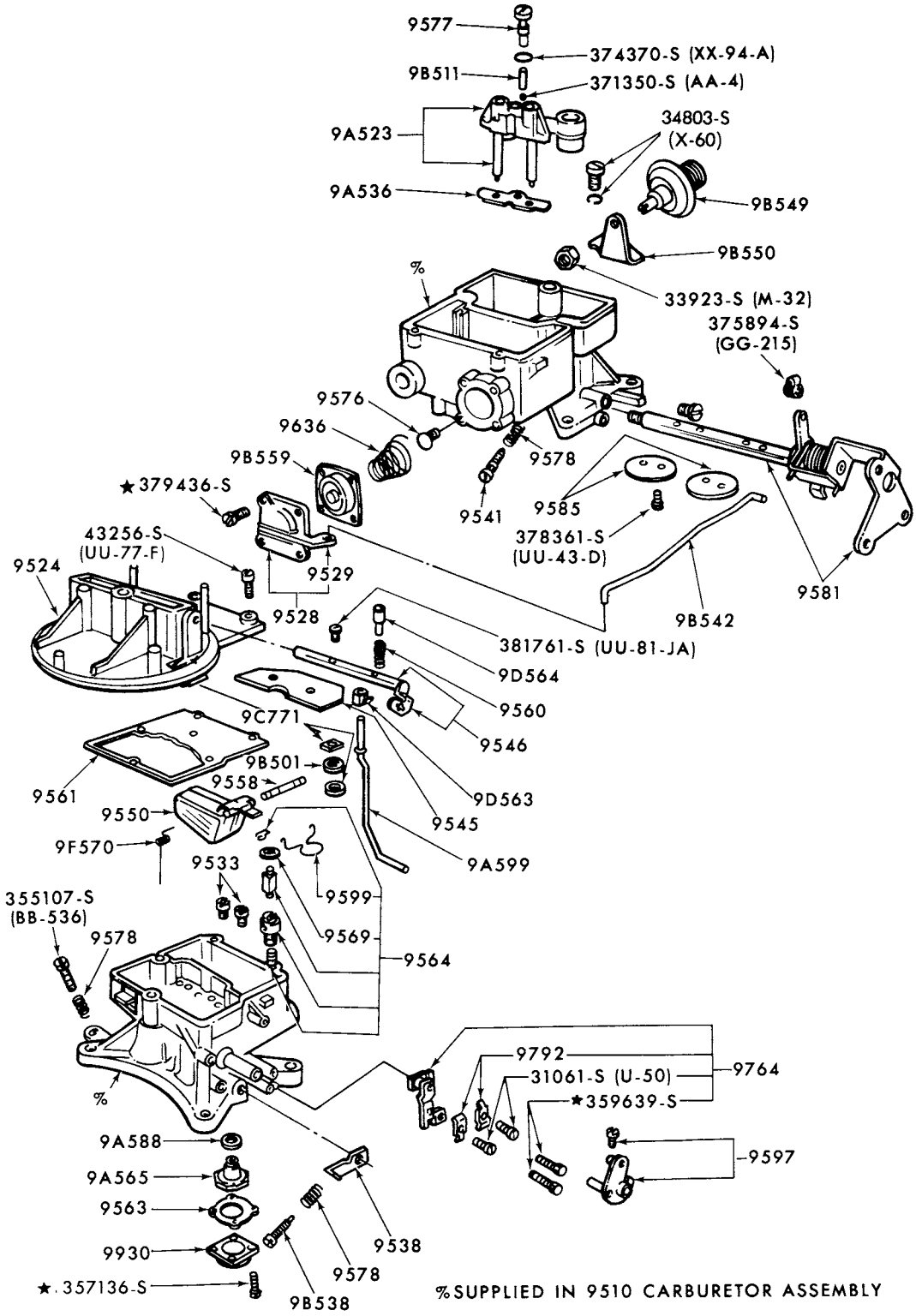

CARBURETOR-FORD 2 BARREL

1973/77 8 CYL. 330 M/D

COPYRIGHT © 1979 FORD MOTOR COMPANY, DEARBORN, MICHIGAN

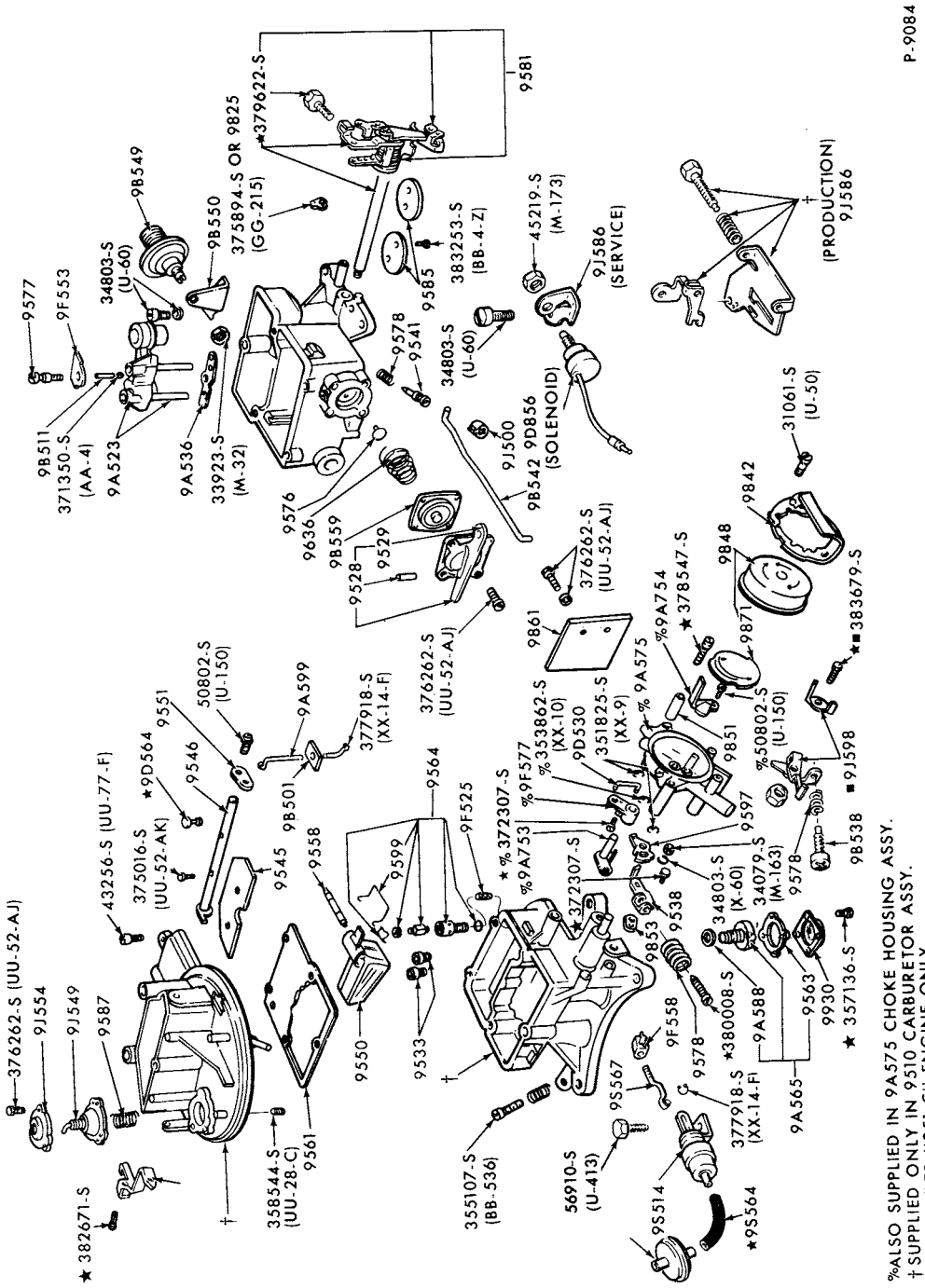

CARBURETOR-FORD 2 BARREL
1973/74 8 CYL. 302, 360 and 390

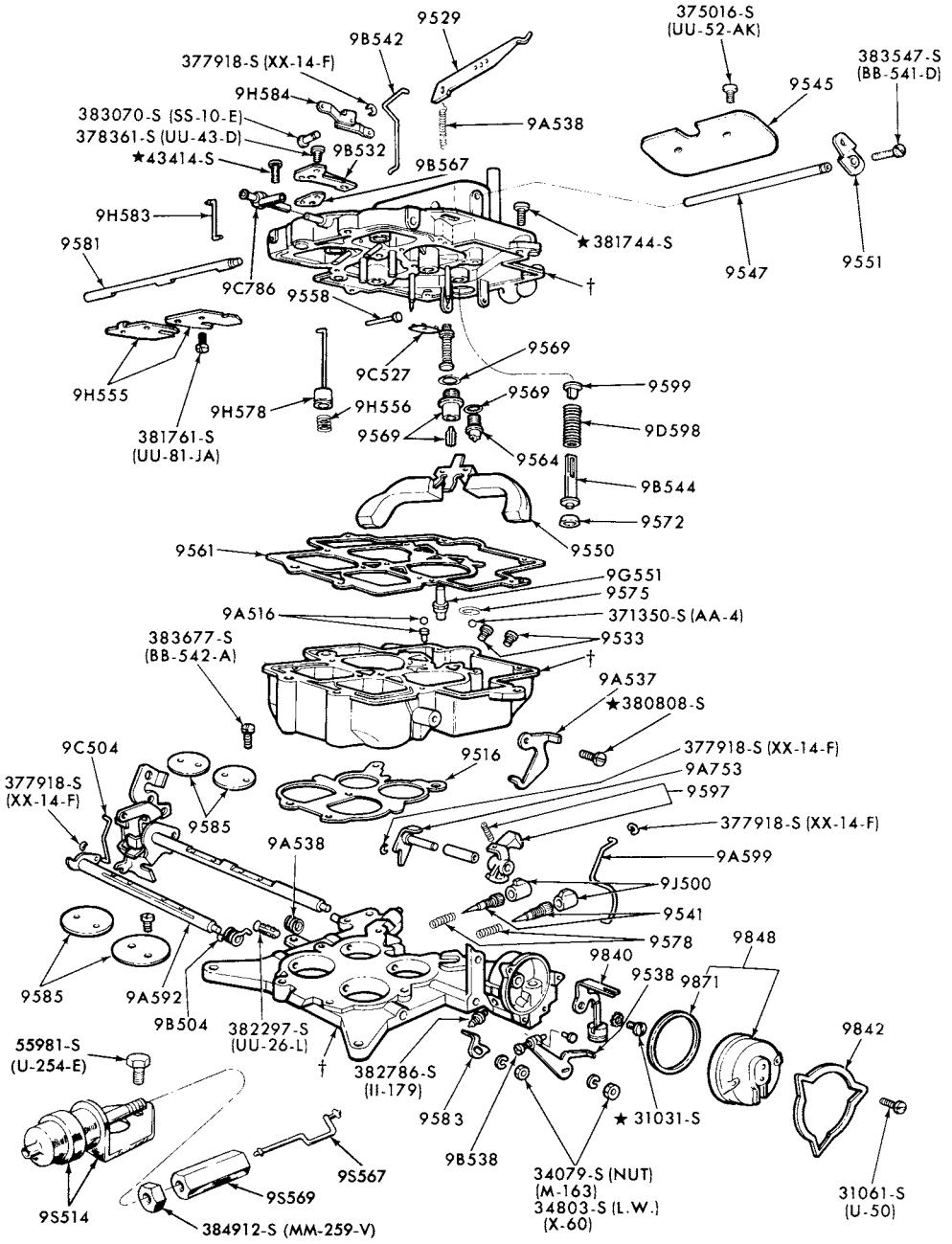

†SUPPLIED ONLY IN 9510 CARBURETOR ASSY.

P-10793

CARBURETOR-FORD 4 BARREL
1973 F250/350--8 CYL. 460 and C6
1974 F100/350--8 CYL. 460 and C6

COPYRIGHT © 1979 FORD MOTOR COMPANY—DEARBORN, MICHIGAN

1973/79 TRUCK SERIES 100/500

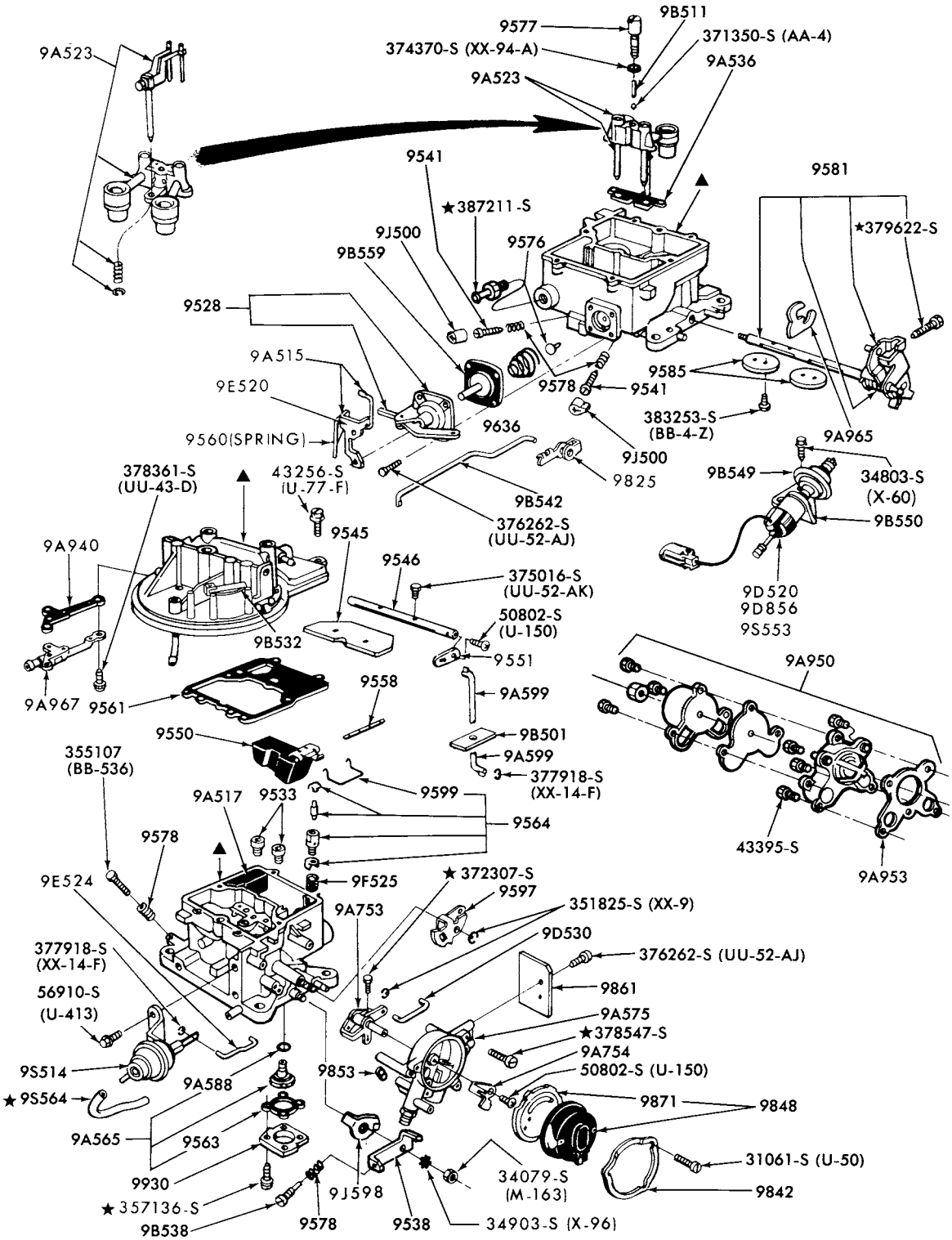

▲ SERVICED ONLY IN 9510 CARBURETOR ASSEMBLY

P-12236

CARBURETOR - FORD 2 BARREL
1975/ 8 CYL. 302, 351W, 360 and 390

1973/79
TRUCK SERIES 100/500

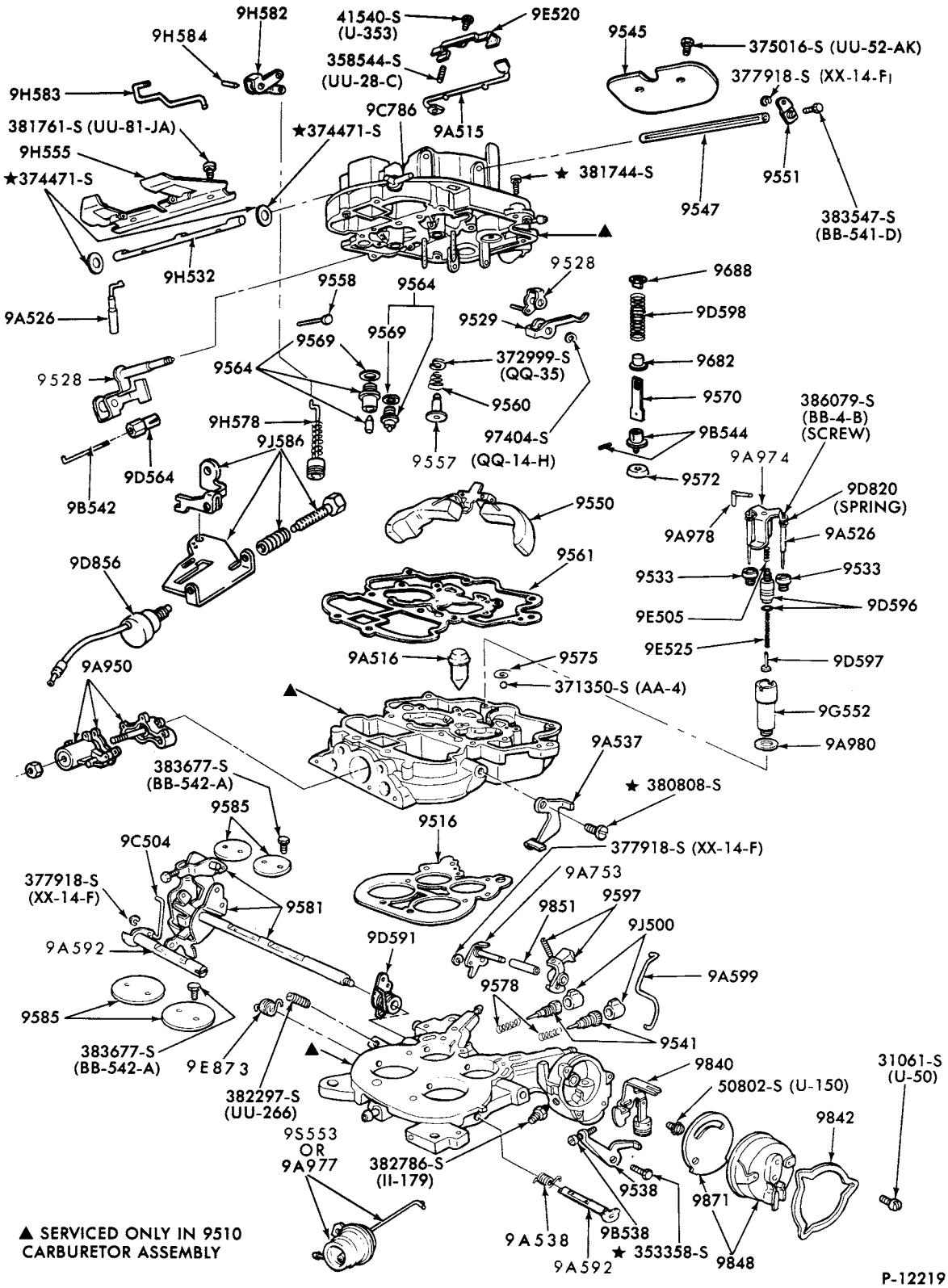

CARBURETOR - FORD 4 BARREL
1975/78 8 CYL. 460

COPYRIGHT © 1979 FORD MOTOR COMPANY—DEARBORN, MICHIGAN

1973/79 TRUCK SERIES 100/500

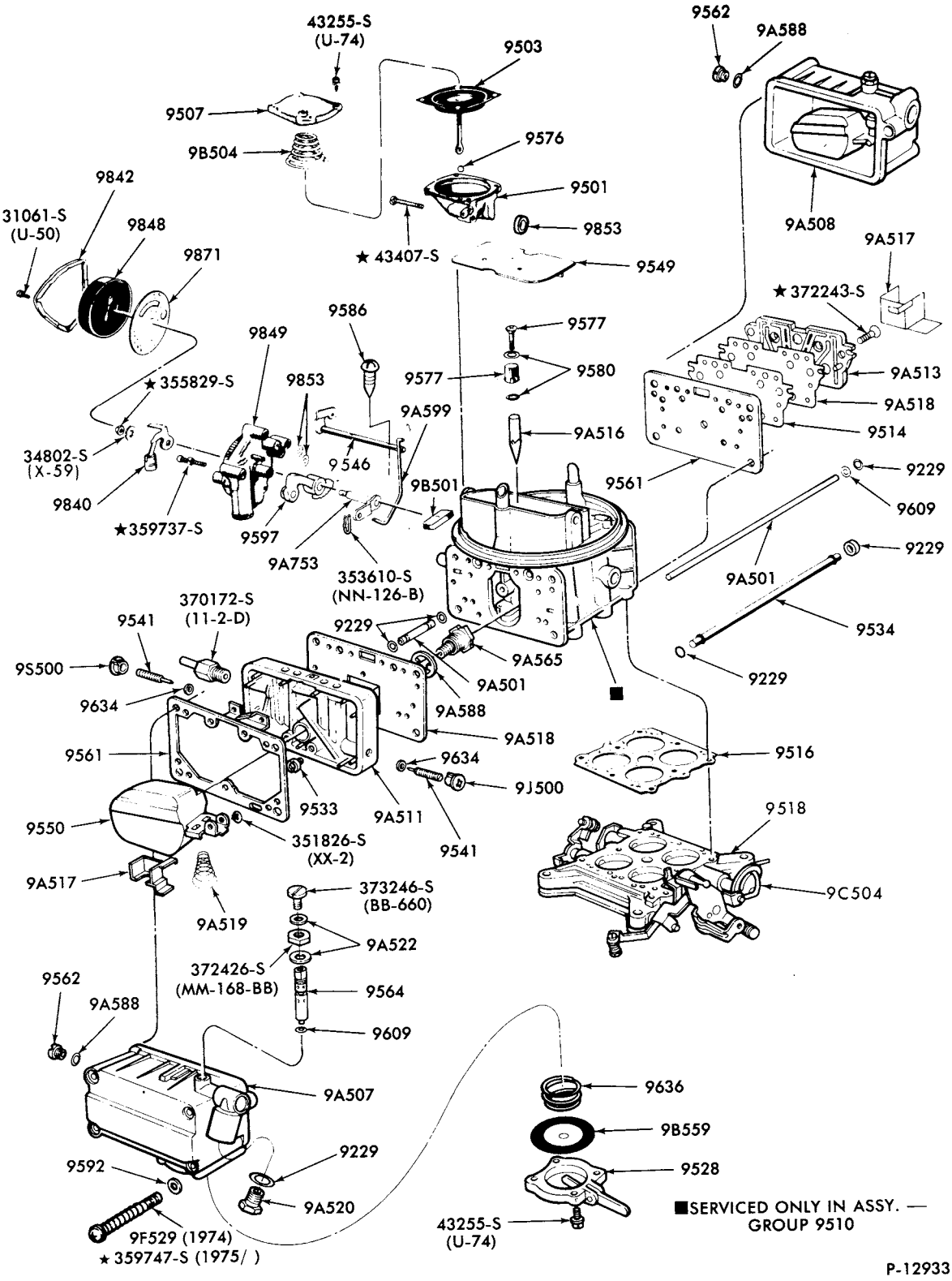

CARBURETOR - HOLLY 4 BARREL
1974/76 8 CYL. 390

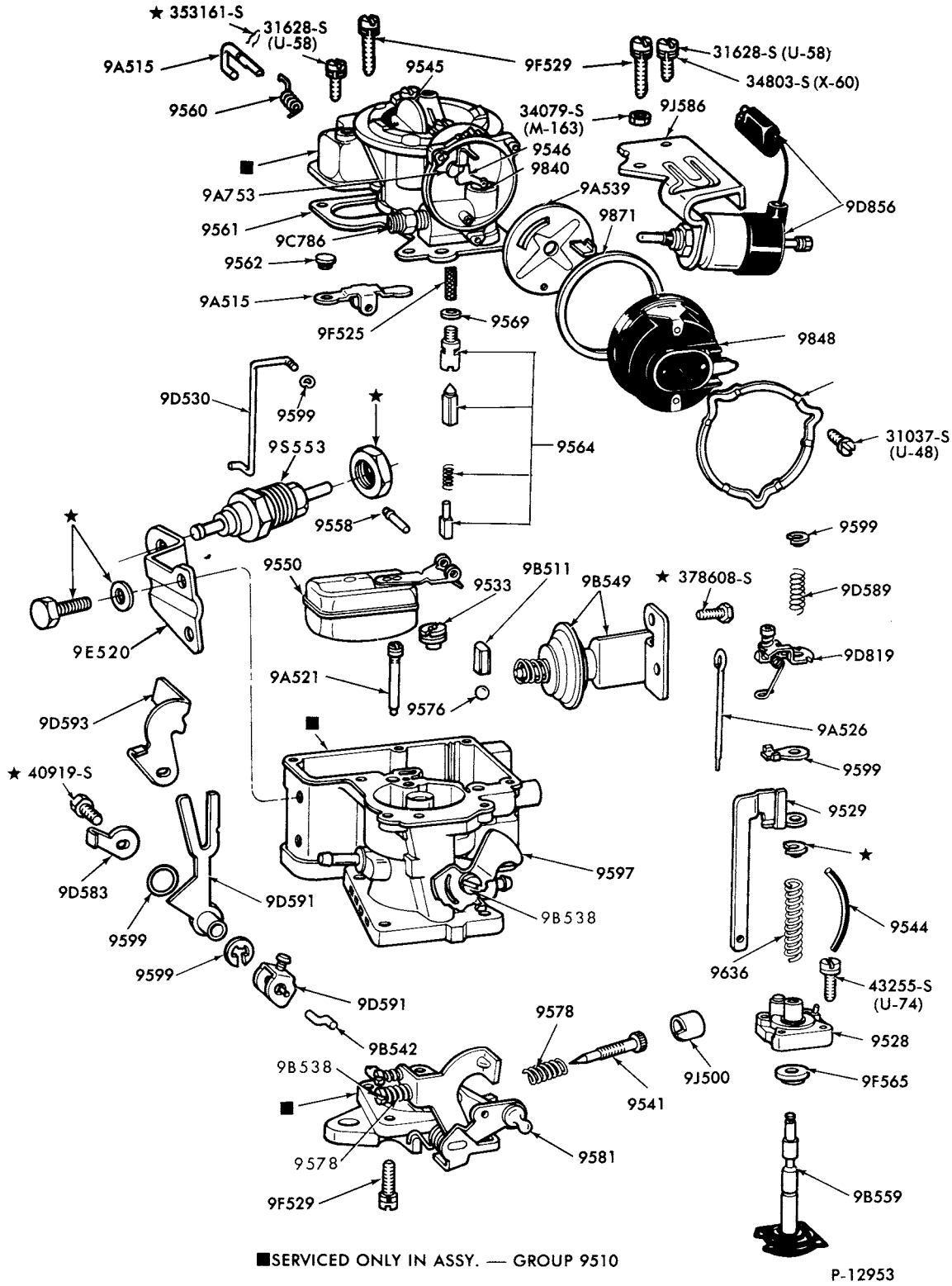

CARBURETOR - CARTER 1 BARREL (THERMOSTATIC CHOKE)
1977/ E100, F100-- 6 CYL. 300

COPYRIGHT © 1979 FORD MOTOR COMPANY, DEARBORN, MICHIGAN

1973/79 TRUCK SERIES 100/500

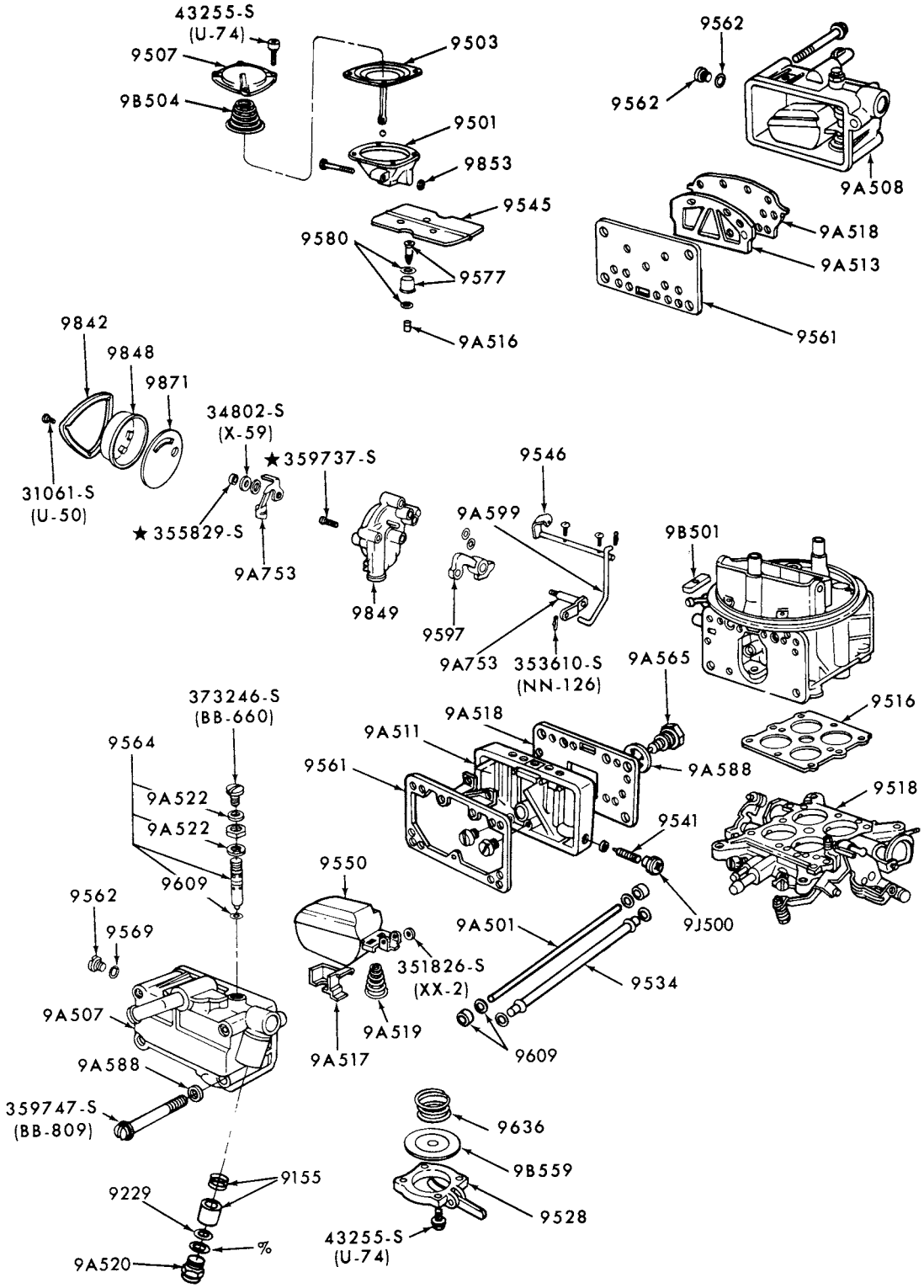

P-15154

% SERVICED ONLY IN ASSY. GROUP 9155

CARBURETOR - HOLLEY 4 BARREL
1979 8 CYL. 460

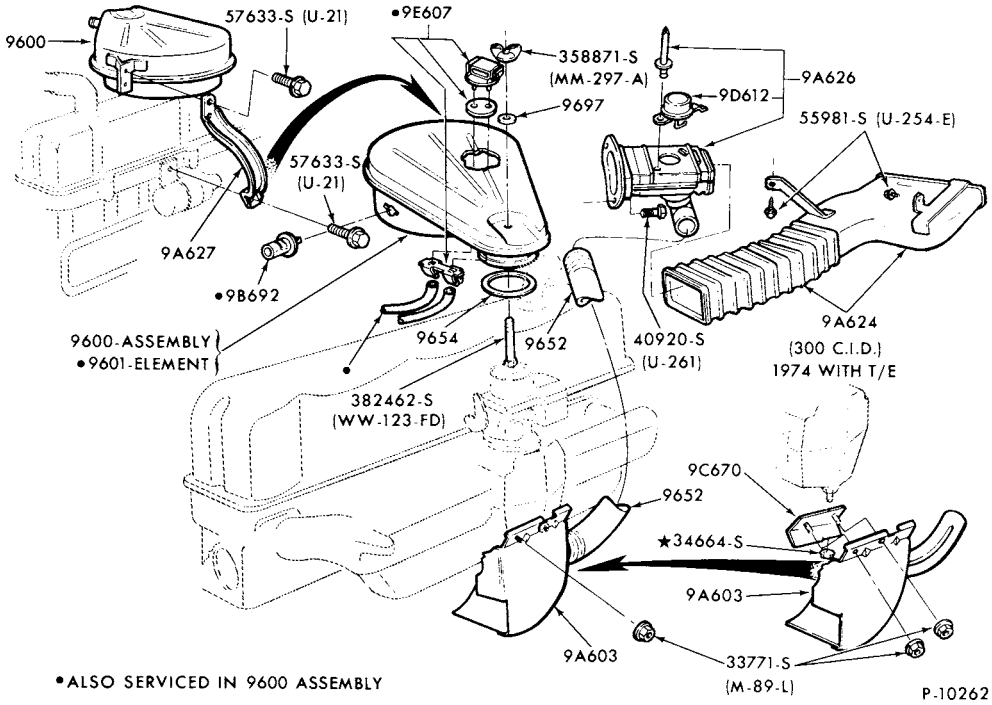

AIR CLEANER and RELATED PARTS (DRY TYPE)
1973/74 E100/300--6 CYL. 240 and 300

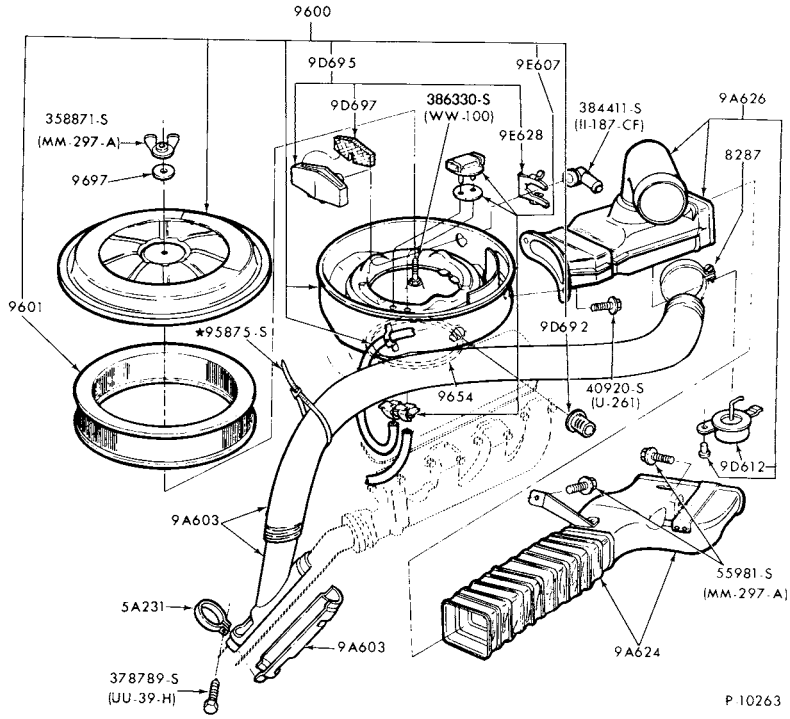

AIR CLEANER and RELATED PARTS (DRY TYPE)
1973/74 E100/300--8 CYL. 302

COPYRIGHT © 1979 FORD MOTOR COMPANY, DEARBORN, MICHIGAN

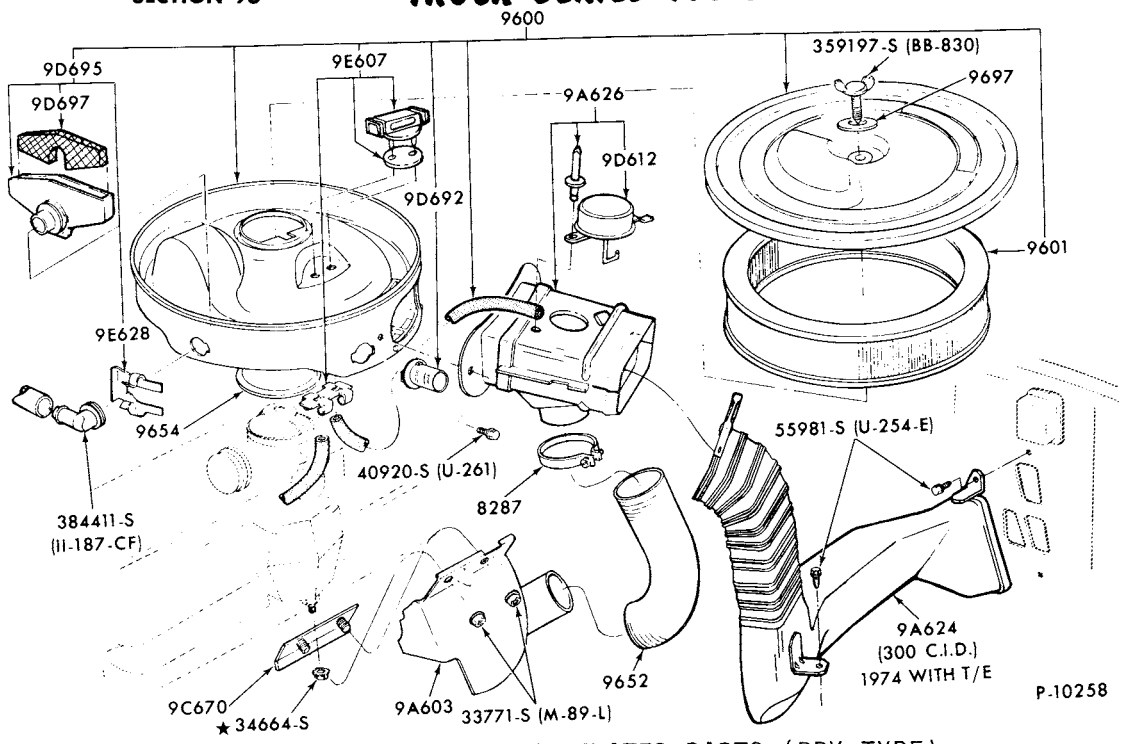

AIR CLEANER and RELATED PARTS (DRY TYPE)
1973/74 F100--6 CYL. 240
1974 F100--6 CYL. 300

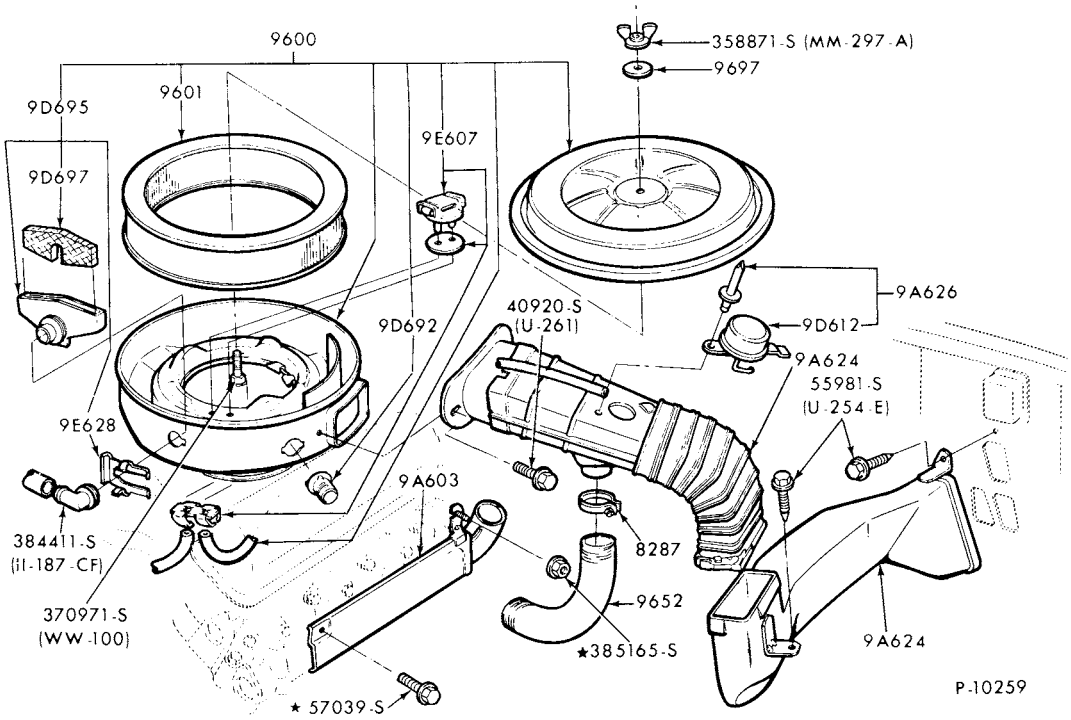

AIR CLEANER and RELATED PARTS (DRY TYPE)
1973 F100--8 CYL. 302
1974 F100--without T/E-8 CYL. 302

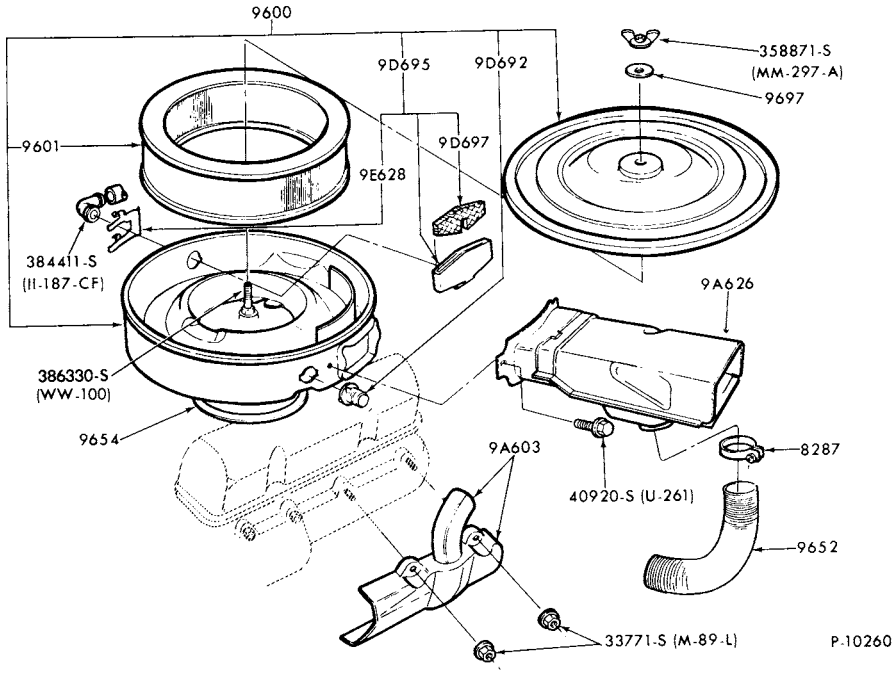

AIR CLEANER and RELATED PARTS (DRY TYPE)
1973 F100/350--8 CYL. 360, 390 and 460
1974 F100--without T/E-8 CYL. 360
1974/76 F250/350--8 CYL. 360 and 390

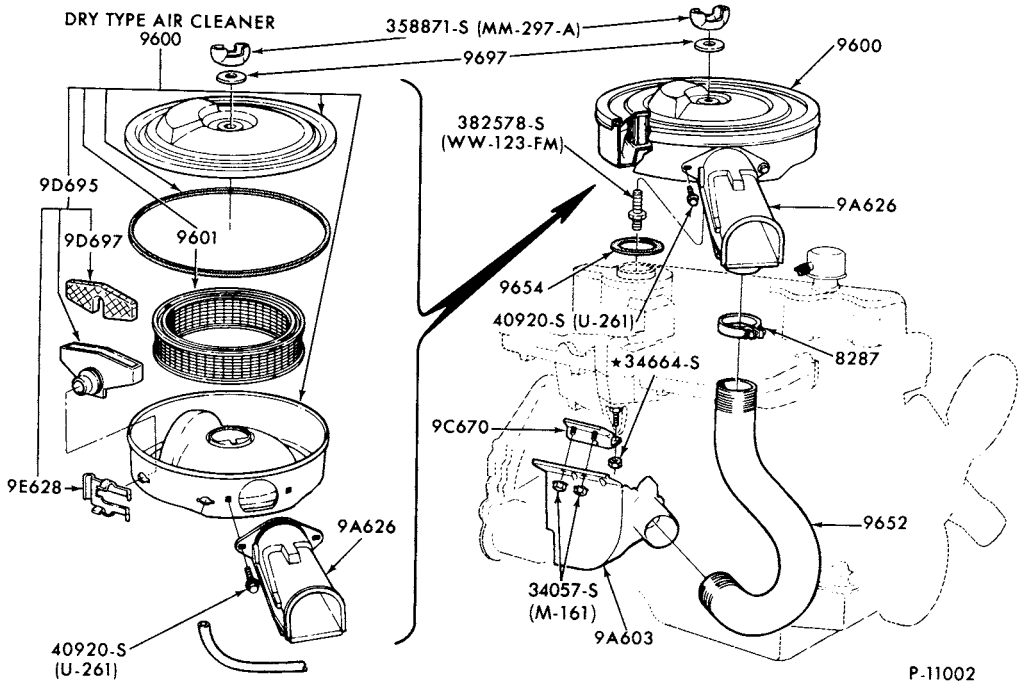

AIR CLEANER and RELATED PARTS (DRY and OIL BATH TYPES)
1973/ F250/350--6 CYL. 300

COPYRIGHT © 1979 FORD MOTOR COMPANY - DEARBORN, MICHIGAN

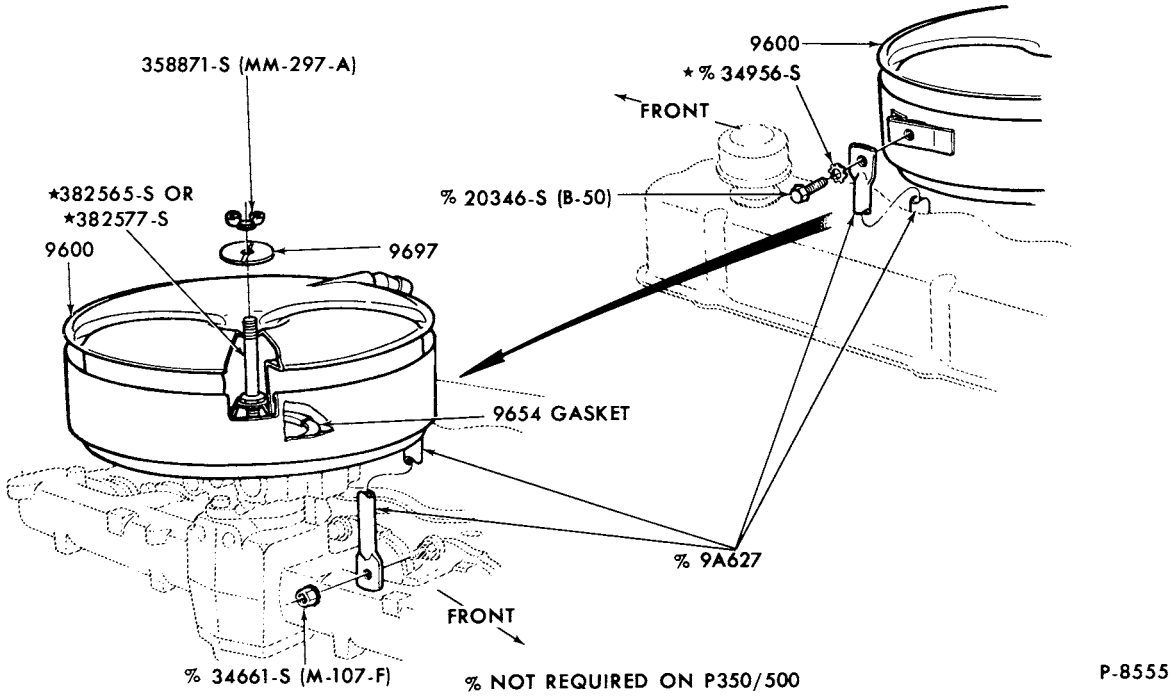

AIR CLEANER and RELATED PARTS (OIL BATH TYPE)
1973/77 B-F500 and P350/500--6 CYL. 300

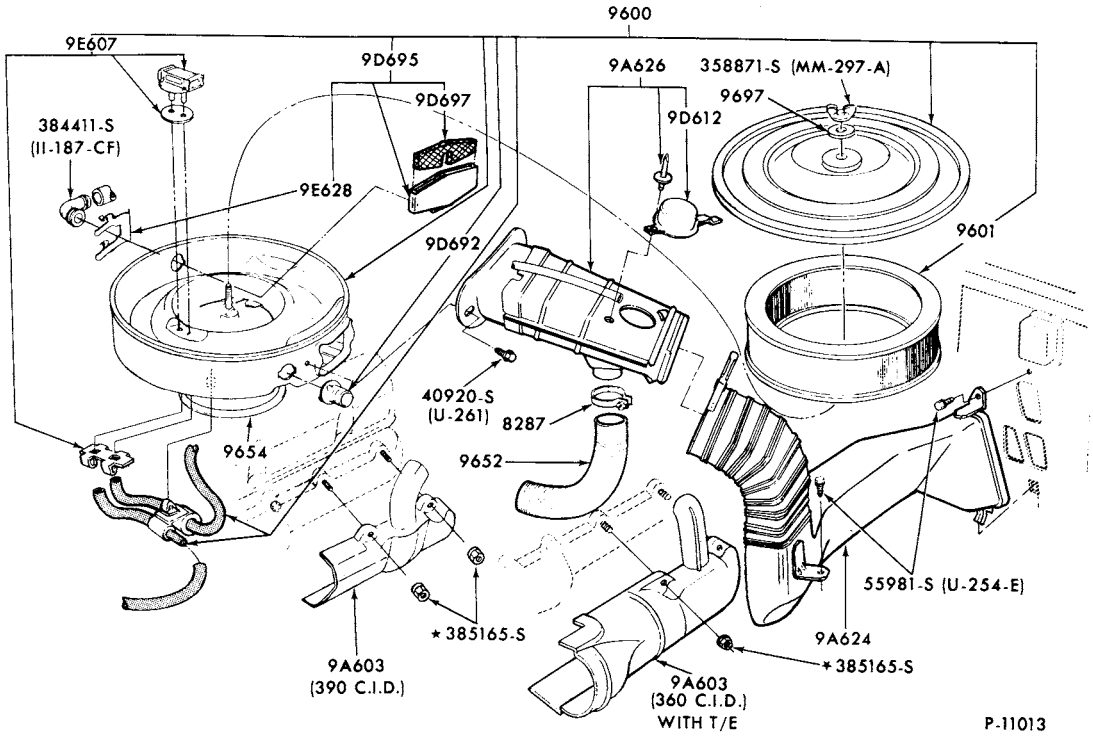

AIR CLEANER and RELATED PARTS (DRY TYPE)
1974 F100--with T/E-8 CYL. 360
1974 F100--8 CYL. 390

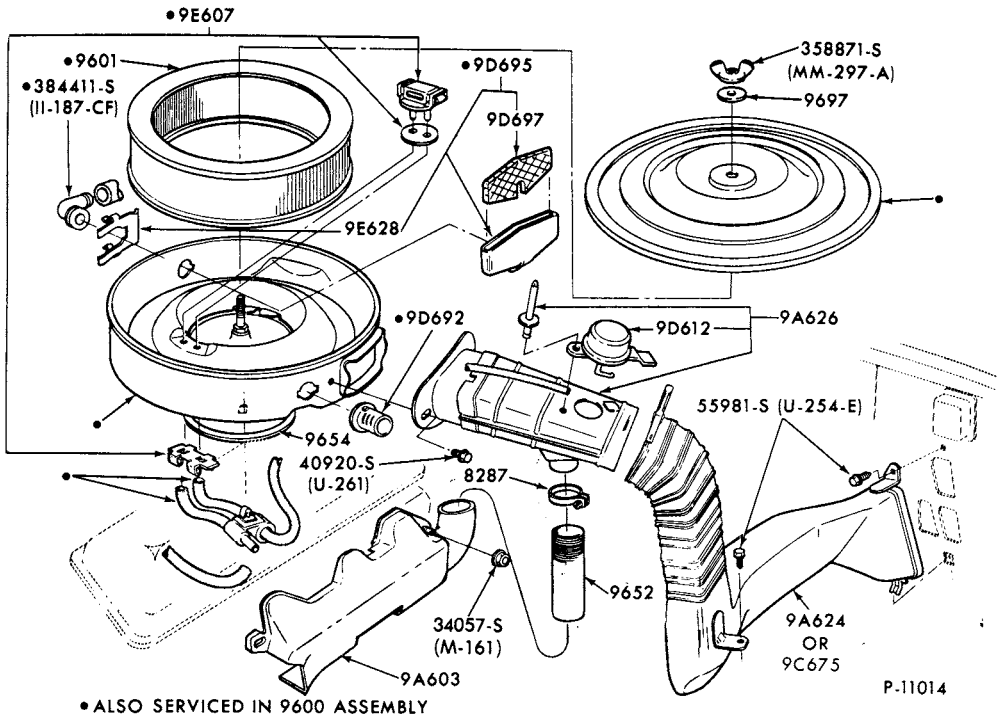

AIR CLEANER and RELATED PARTS (DRY TYPE)
1974/ F100--8 CYL. 460

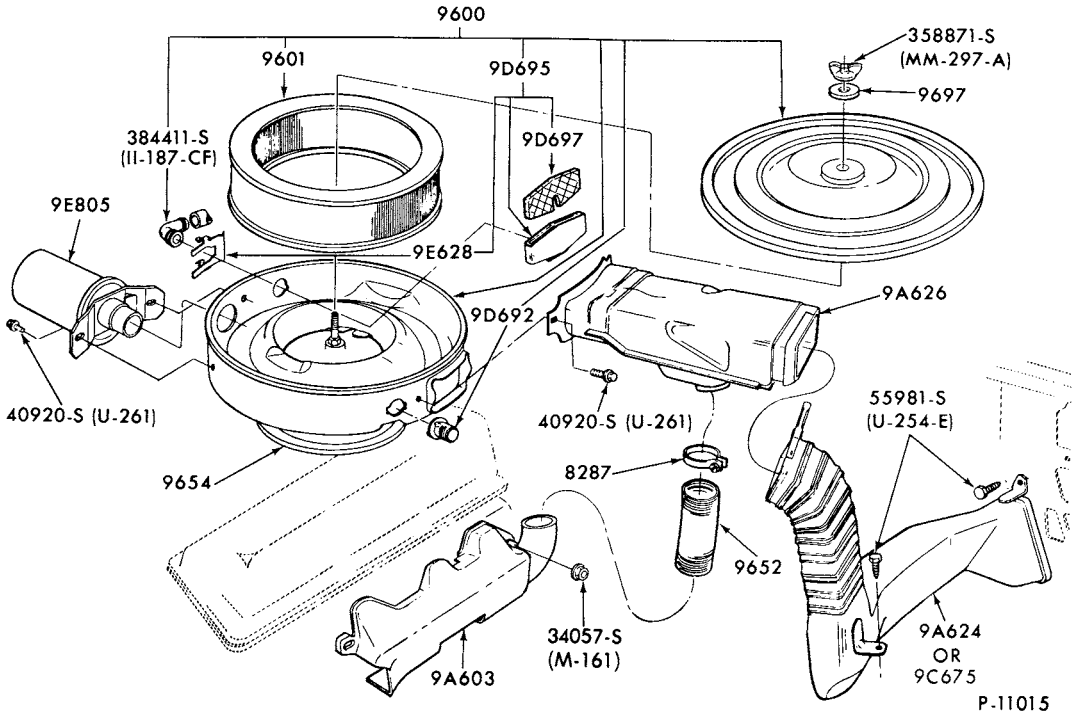

AIR CLEANER and RELATED PARTS (DRY TYPE)
1974/ F150/350--8 CYL. 460

COPYRIGHT © 1979 FORD MOTOR COMPANY - DEARBORN, MICHIGAN

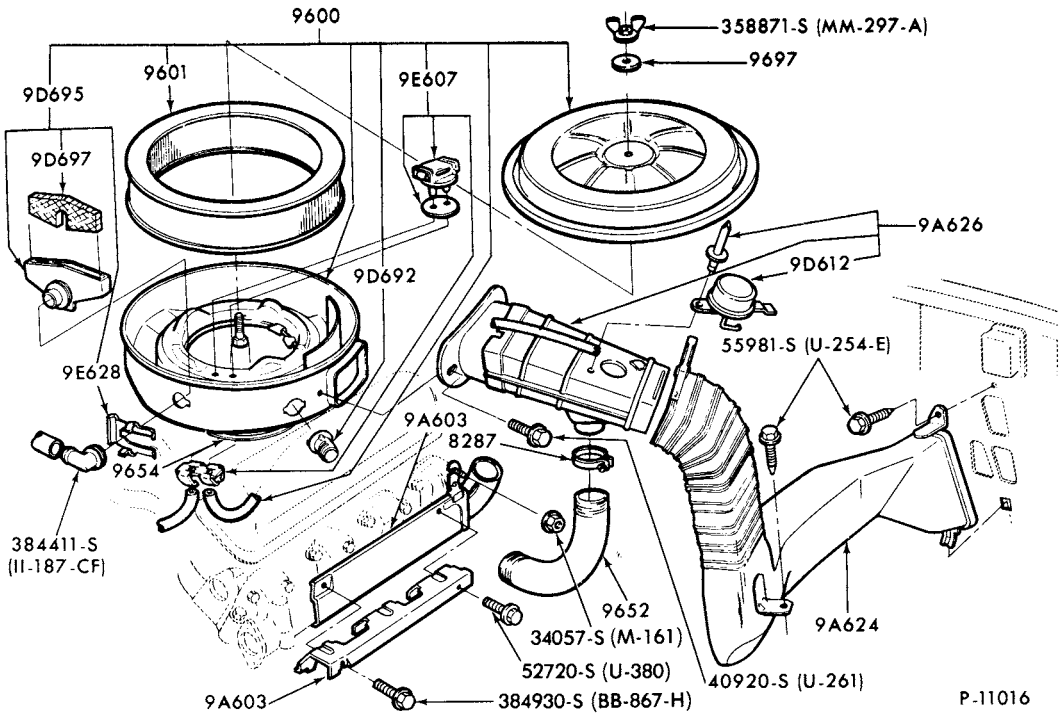

AIR CLEANER and RELATED PARTS (DRY TYPE)
1974 F100--with T/E-8 CYL. 302

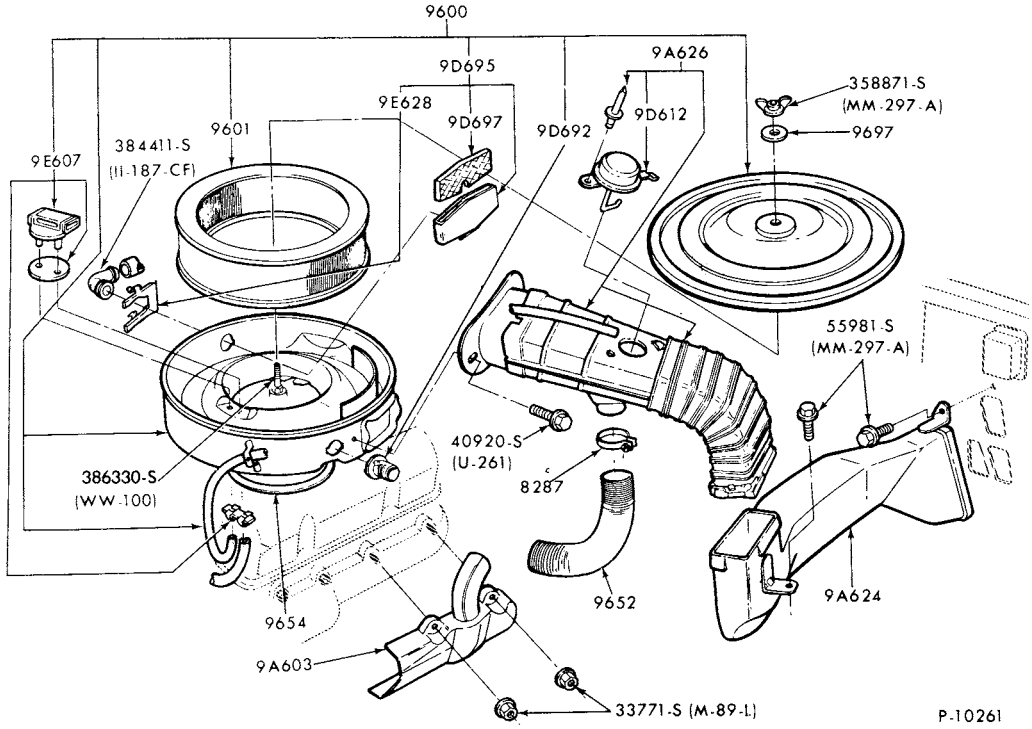

AIR CLEANER and RELATED PARTS (DRY TYPE)
1973 F100--without T/E-8 CYL. 360 and 390

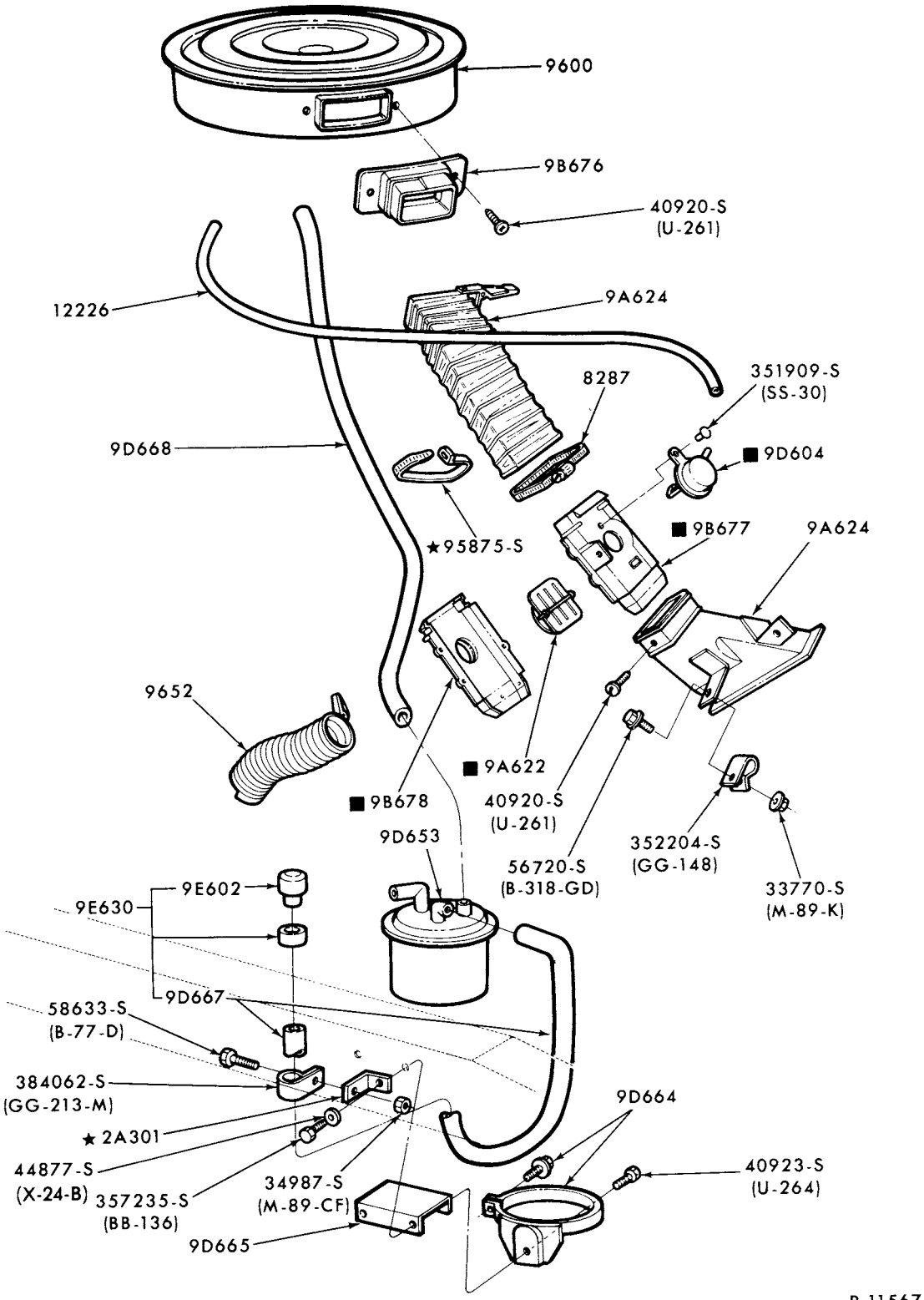

■ SERVICED ONLY IN 9A626 ASSY.

AIR CLEANER and RELATED PARTS
1974/76 M450/500--8 CYL. 460

COPYRIGHT © 1979 FORD MOTOR COMPANY—DEARBORN, MICHIGAN

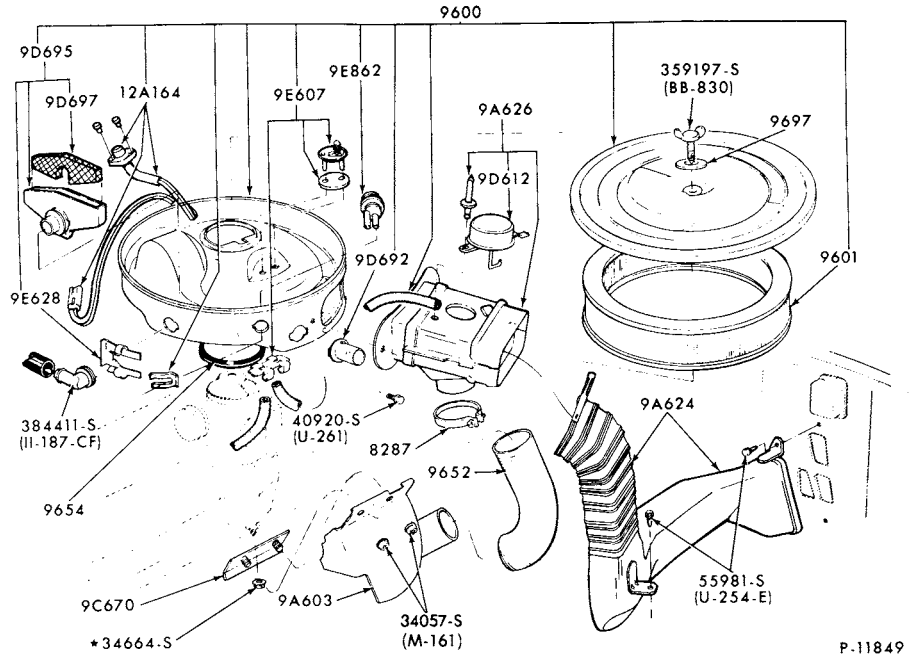

AIR CLEANER and RELATED PARTS (DRY TYPE)
1975/ F100--6 CYL. 300

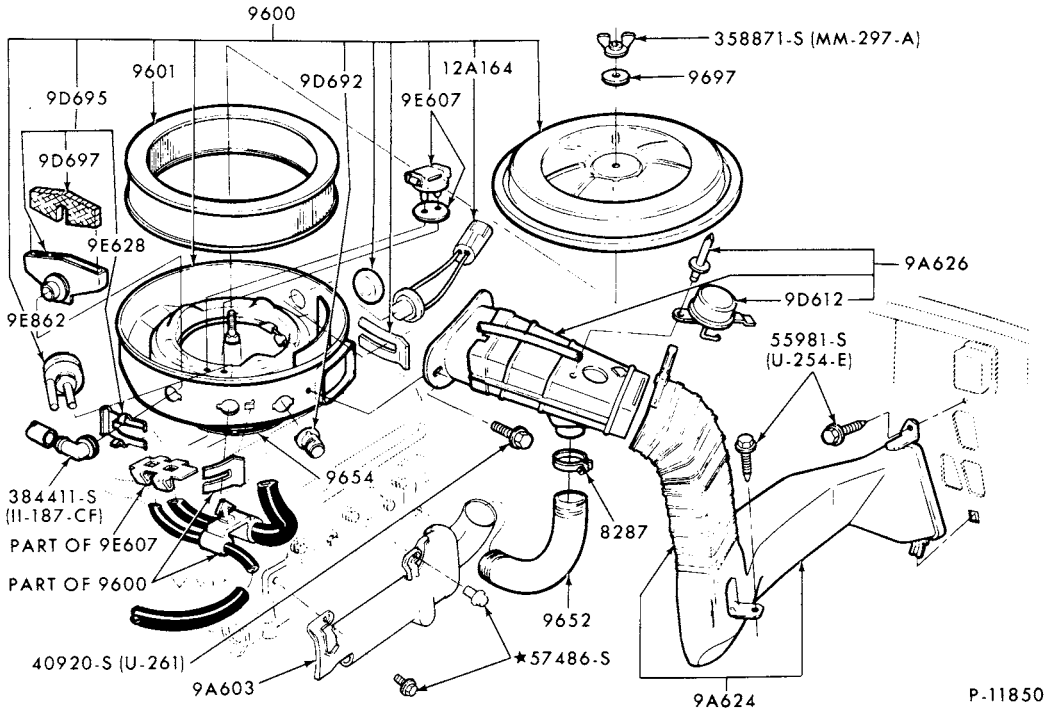

AIR CLEANER and RELATED PARTS (DRY TYPE)
1975/ F100--8 CYL. 302

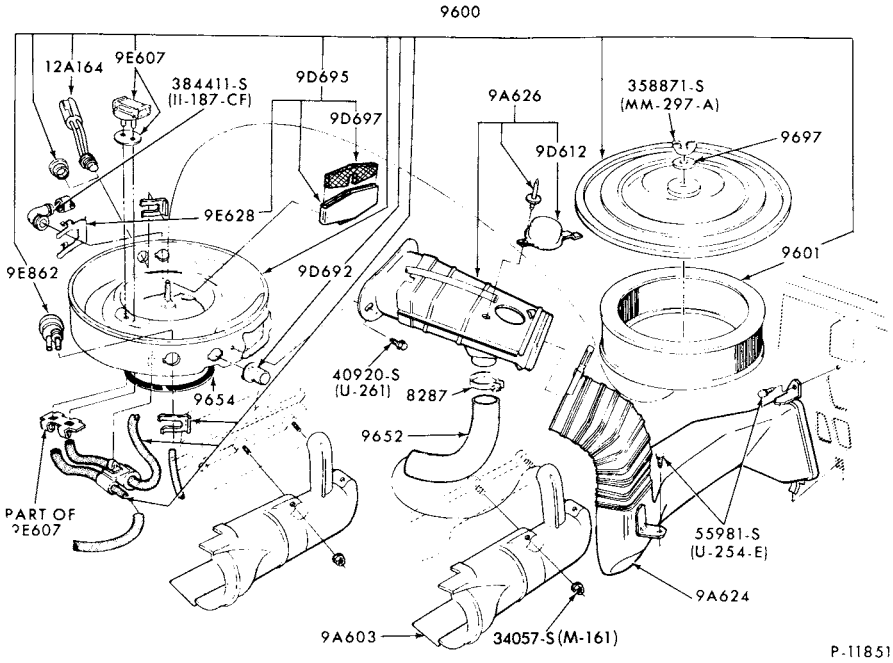

AIR CLEANER and RELATED PARTS (DRY TYPE)
1975/76 F100--8 CYL. 360 and 390

COPYRIGHT © 1979 FORD MOTOR COMPANY—DEARBORN, MICHIGAN

1973/79 TRUCK SERIES 100/500

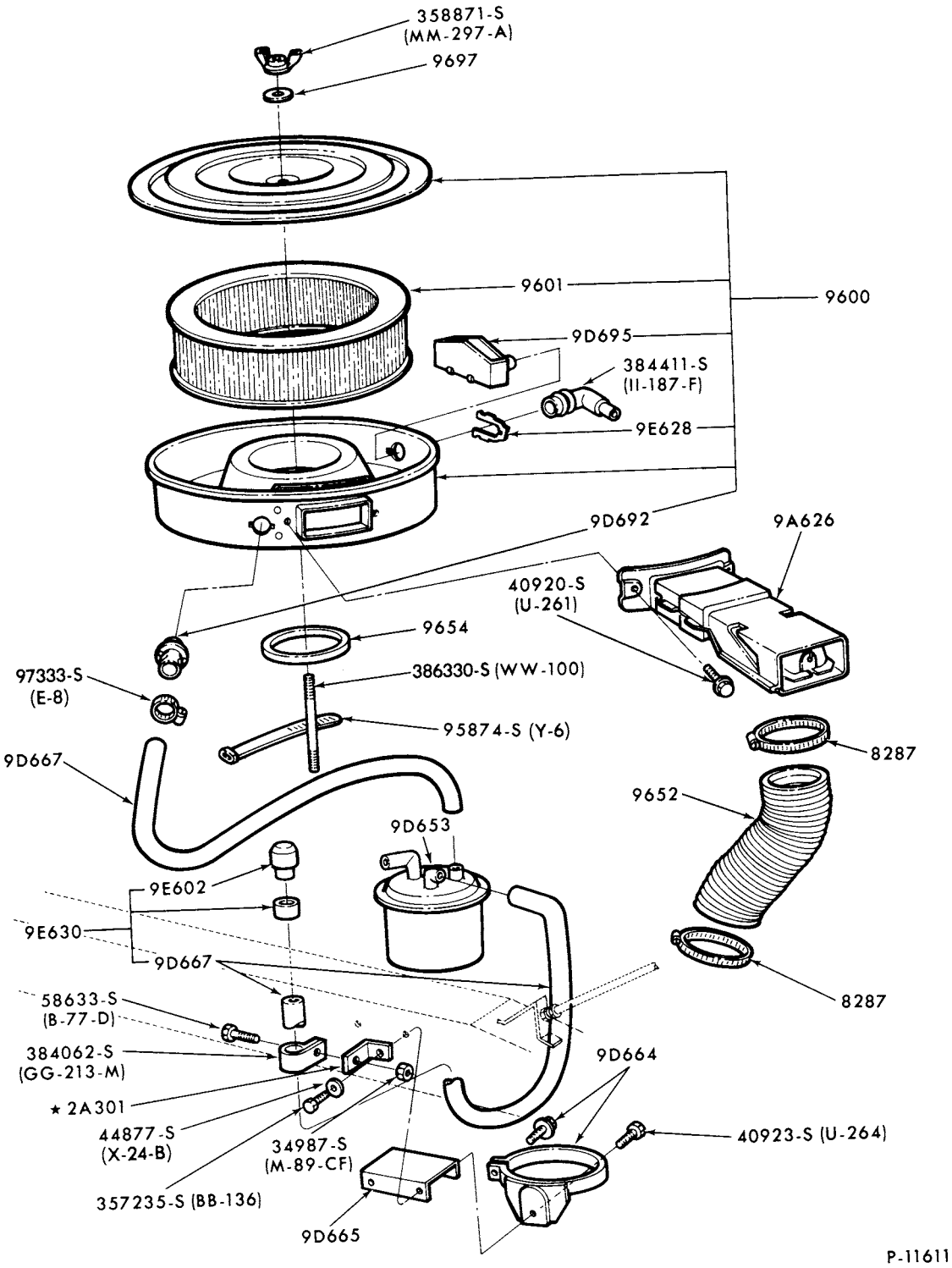

AIR CLEANER and RELATED PARTS (DRY TYPE)
1973/76 M450/500--8 CYL. 360 and 390

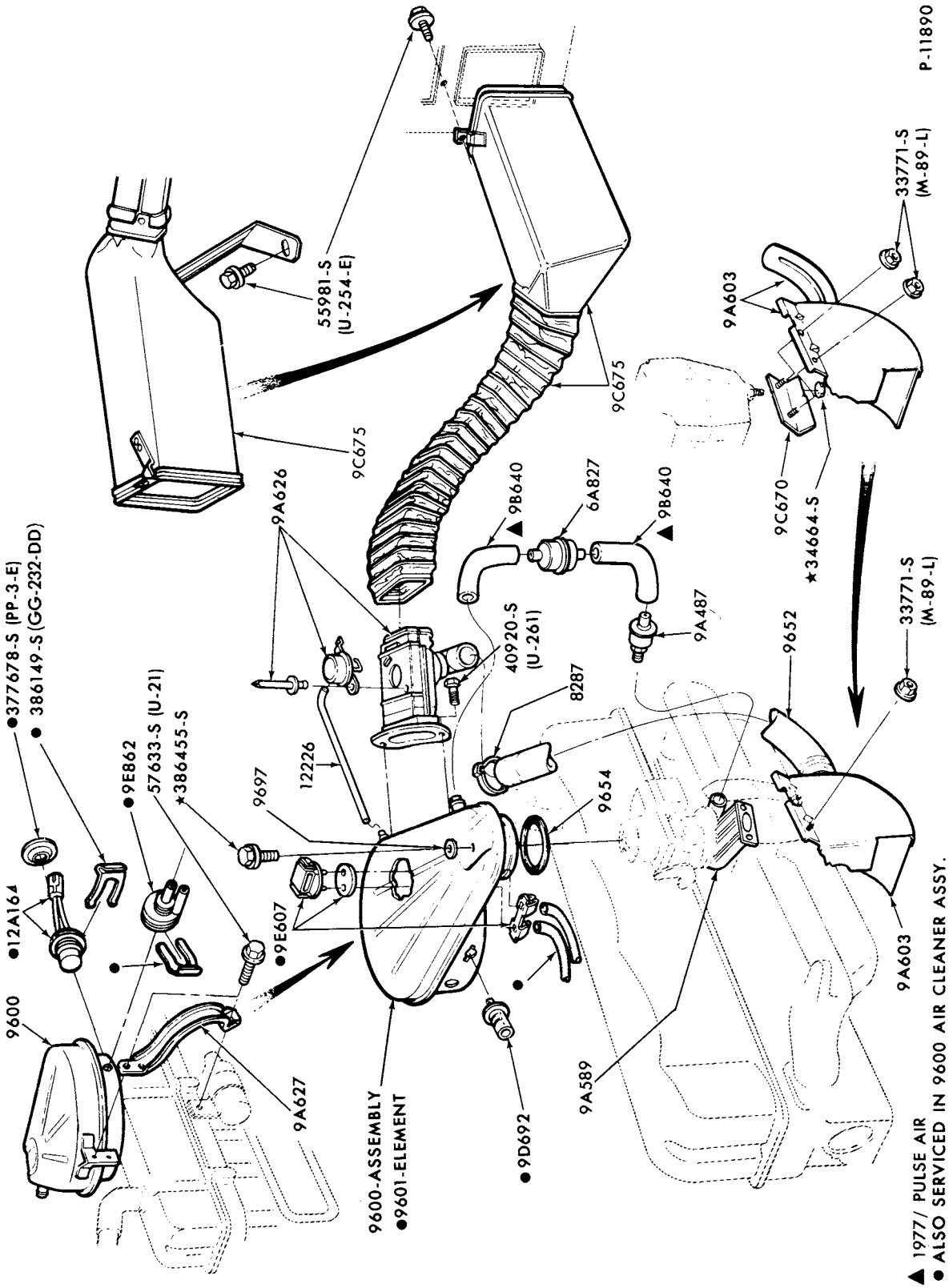

AIR CLEANER and RELATED PARTS (DRY TYPE)
1975/77 E100/350--6 CYL. 300

COPYRIGHT © 1980 FORD MOTOR COMPANY DEARBORN, MICHIGAN

1973/79 TRUCK SERIES 100/500

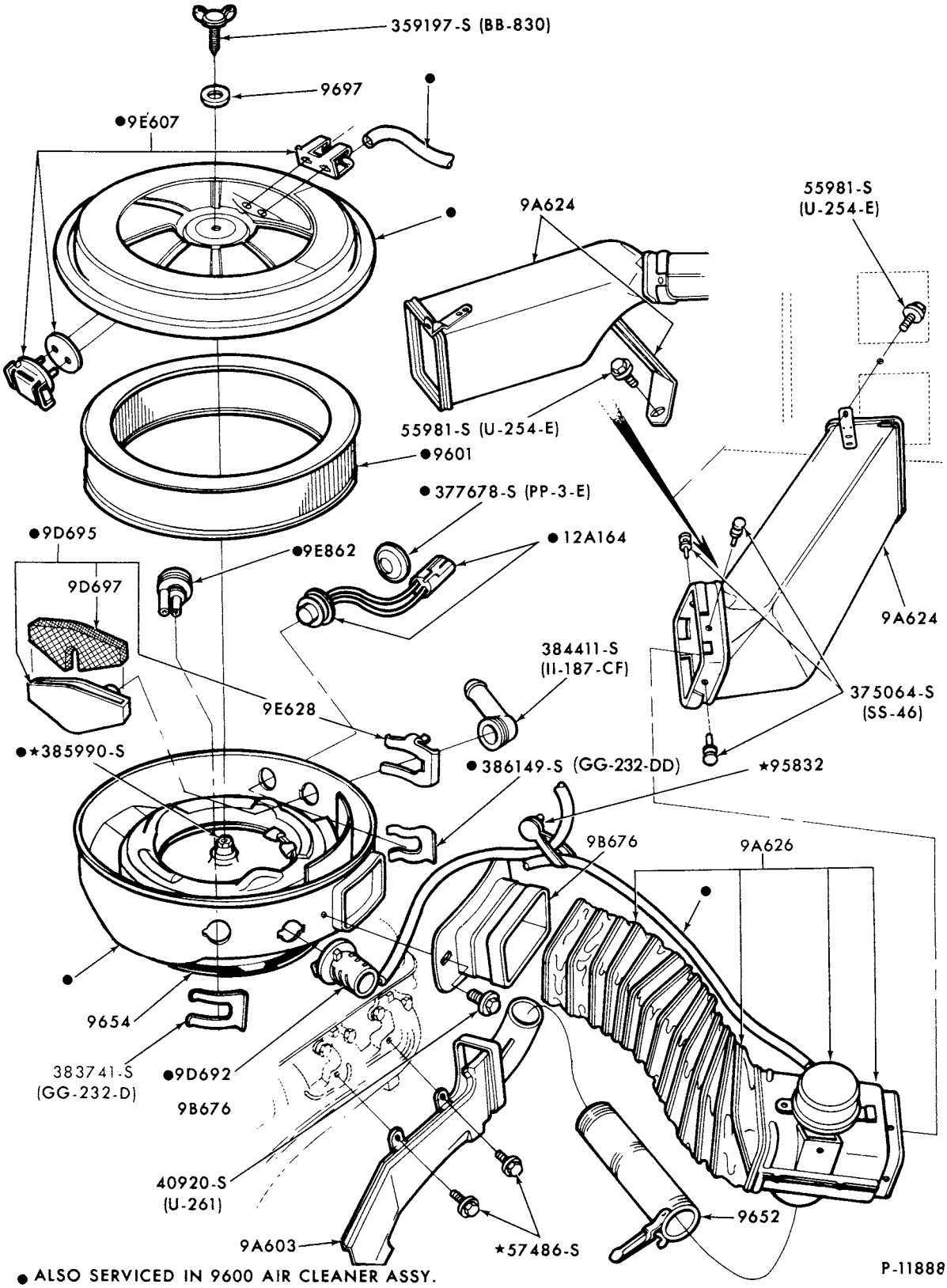

● ALSO SERVICED IN 9600 AIR CLEANER ASSY.

AIR CLEANER and RELATED PARTS (DRY TYPE)
1975/77 E100/350--8 CYL. 351W

1973/79 TRUCK SERIES 100/500

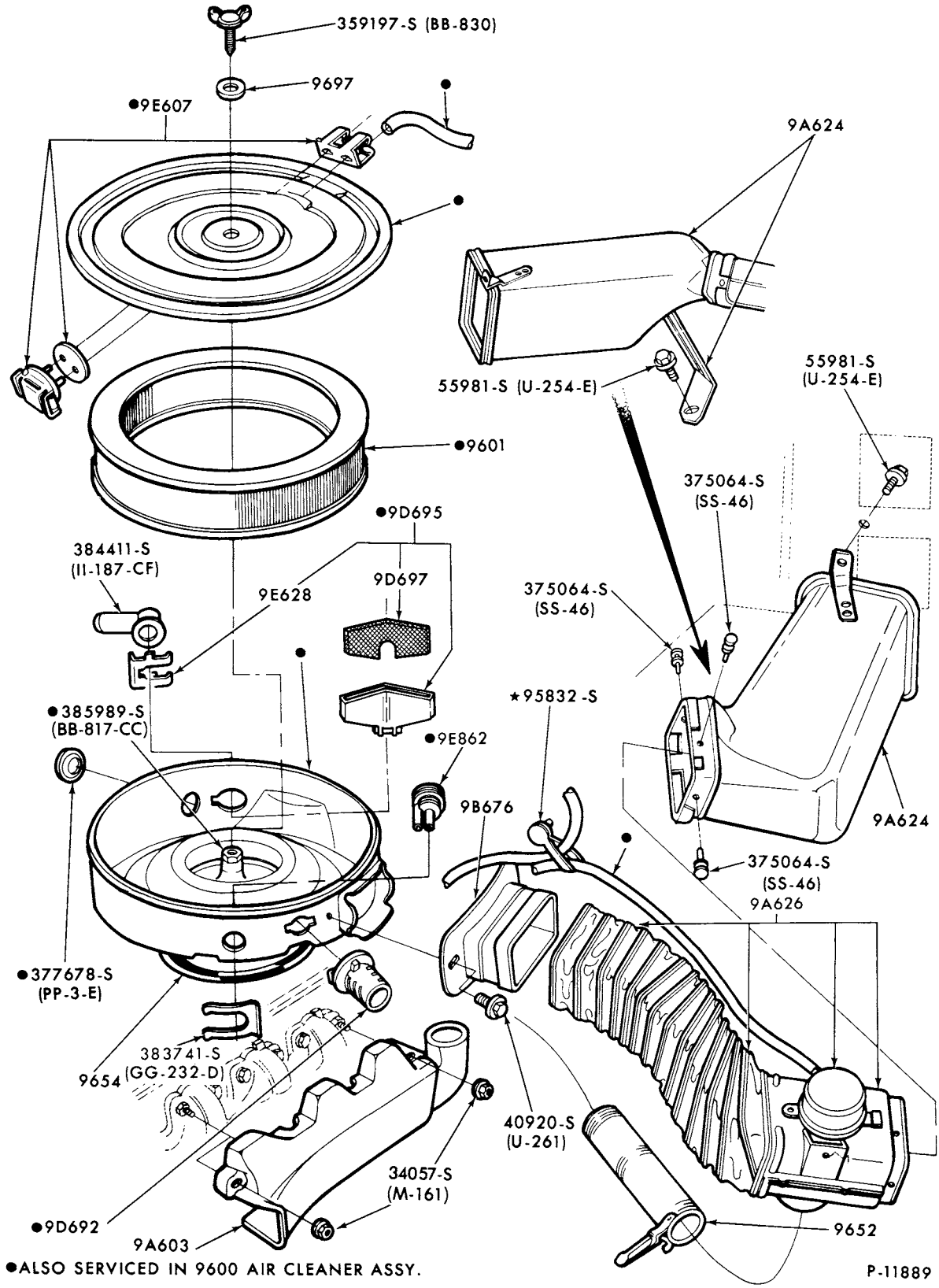

AIR CLEANER and RELATED PARTS (DRY TYPE)
1975/ E250/350--8 CYL. 460

COPYRIGHT © 1979 FORD MOTOR COMPANY - DEARBORN, MICHIGAN

1973/79 TRUCK SERIES 100/500

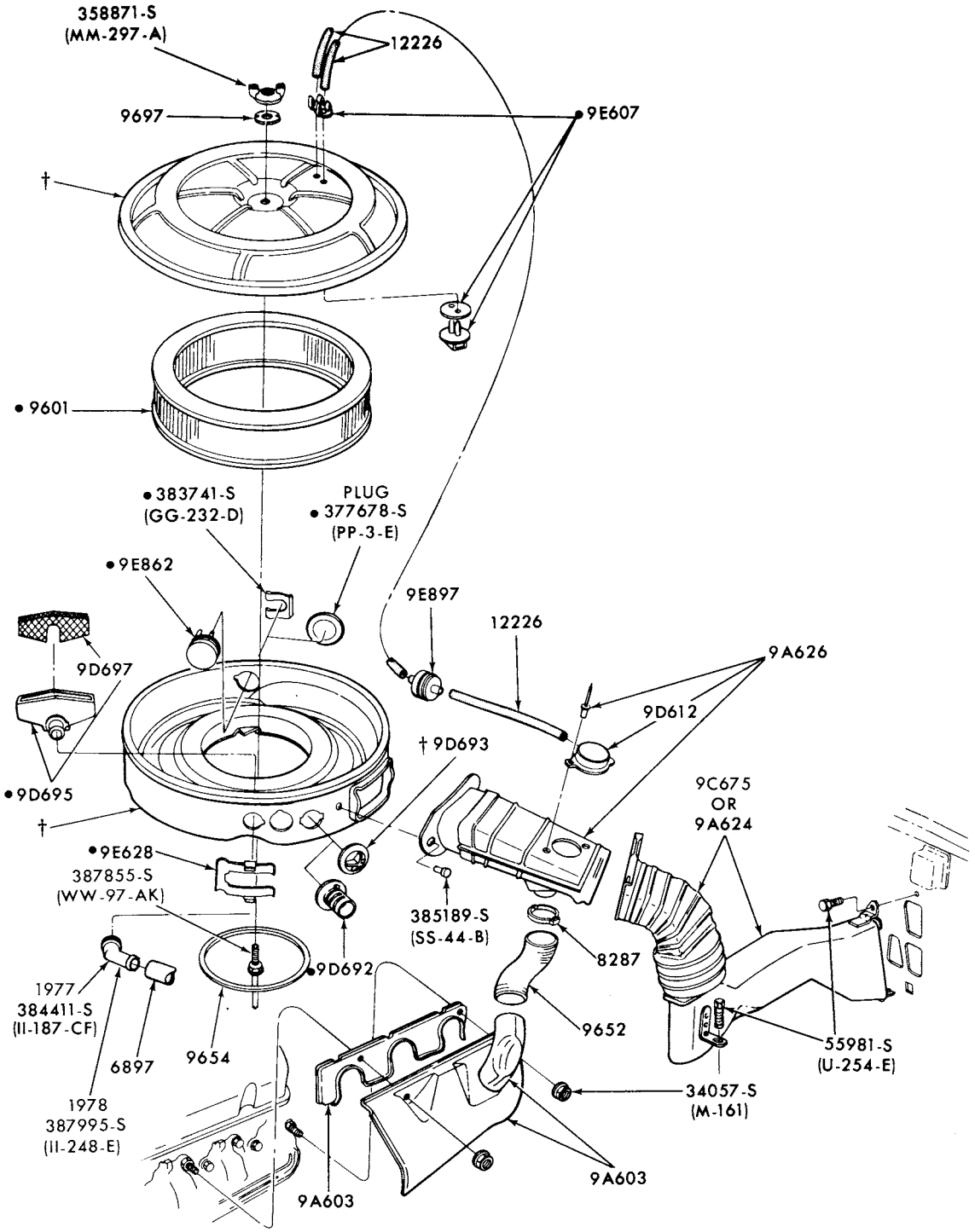

• ALSO SERVICED IN 9600 AIR CLEANER ASSY.
† SERVICED ONLY IN 9600 AIR CLEANER ASSY.

P-13437

AIR CLEANER and RELATED PARTS (DRY TYPE)
1977 F100/350--8 CYL.351M,400

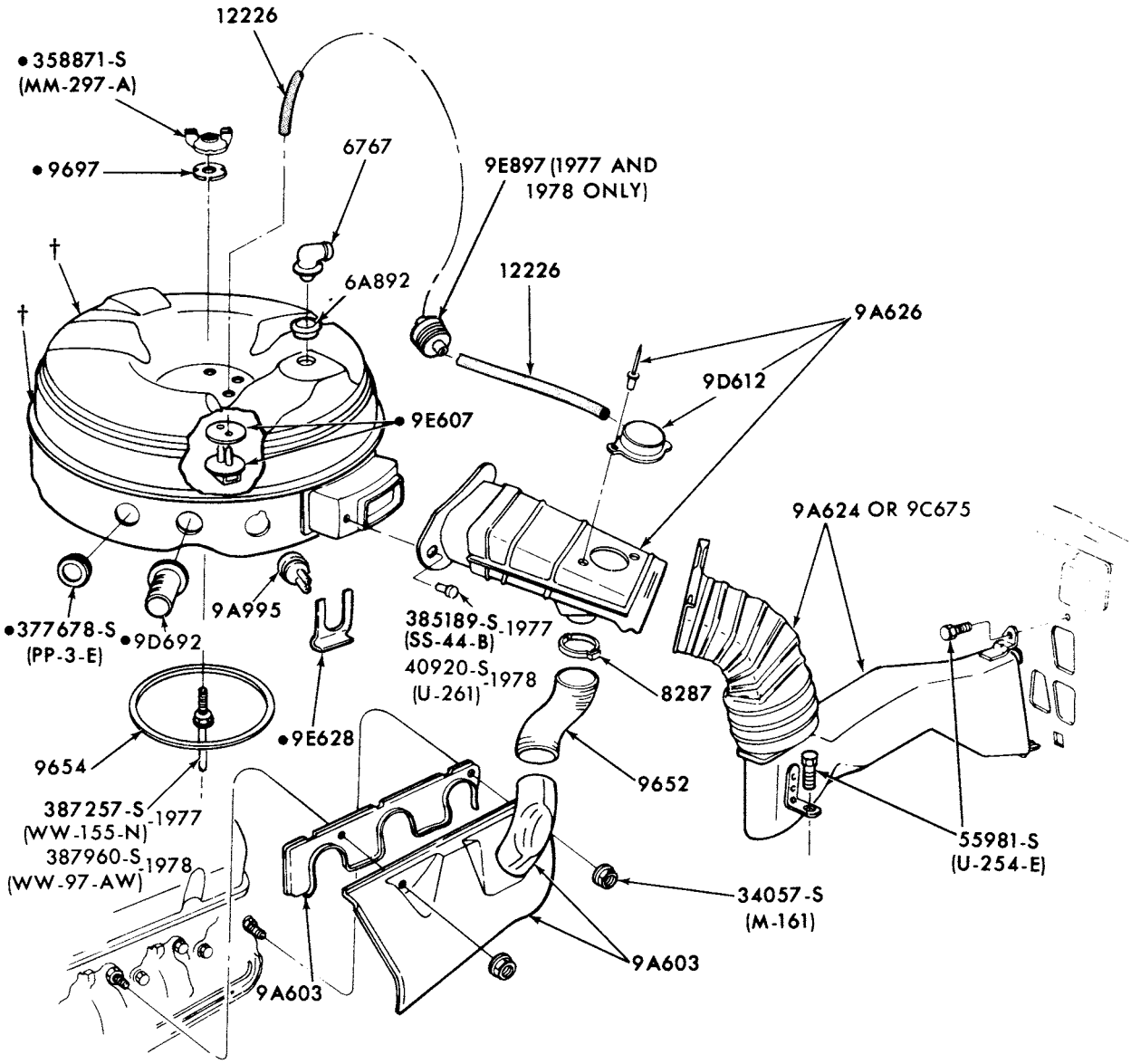

• ALSO SERVICED IN 9600 AIR CLEANER ASSY.
† SERVICED ONLY IN 9600 AIR CLEANER ASSY.

P-13438

AIR CLEANER and RELATED PARTS (OIL BATH TYPE)
1977 F100/350--8 CYL.351M,400

COPYRIGHT © 1980— FORD MOTOR COMPANY —DEARBORN, MICHIGAN

1973/79 TRUCK SERIES 100/500

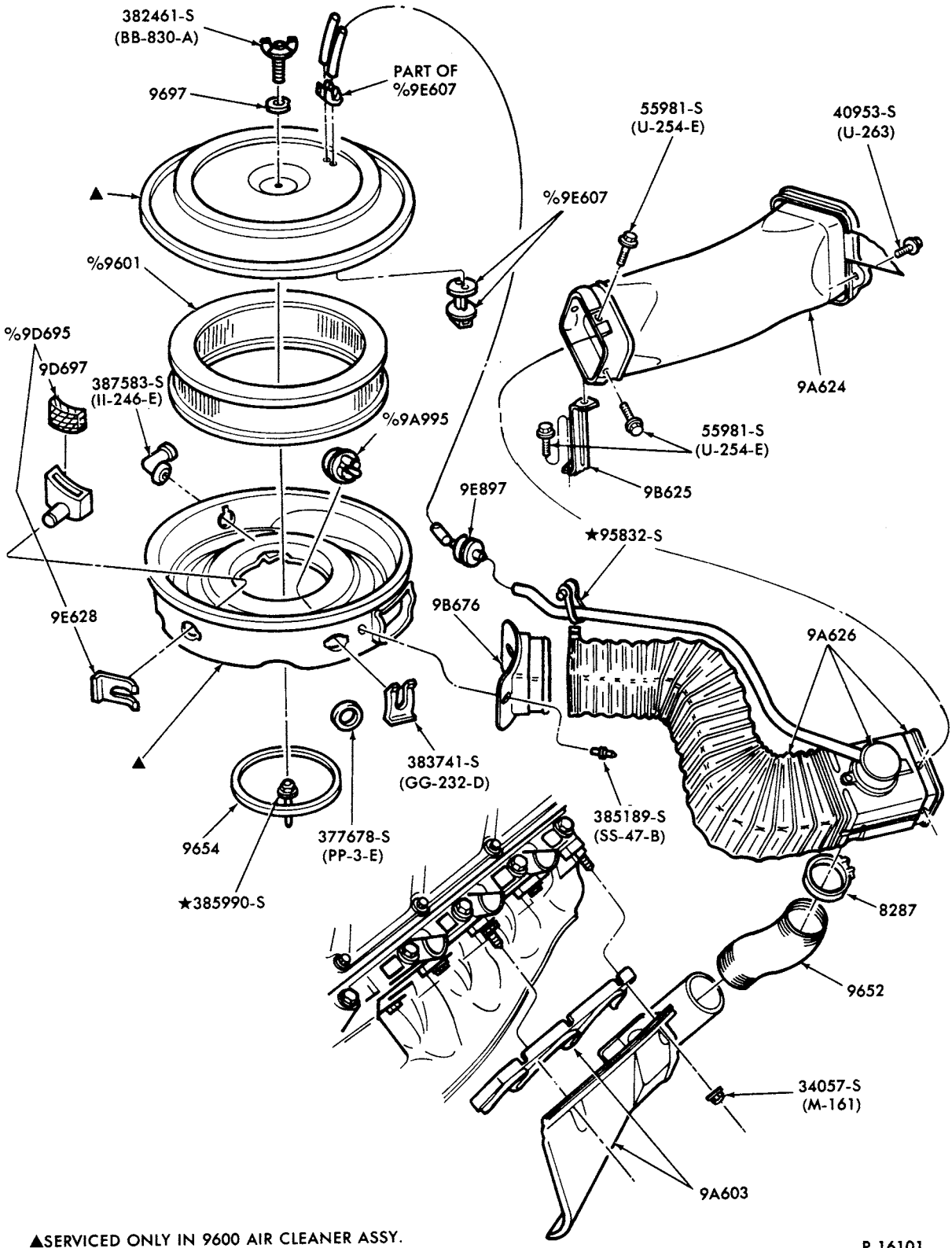

▲SERVICED ONLY IN 9600 AIR CLEANER ASSY.
%ALSO SERVICED IN 9600 AIR CLEANER ASSY.

P-16101

AIR CLEANER and RELATED PARTS
1979 E150/350--8 CYL. 351M,400

1973/79
TRUCK SERIES 100/500

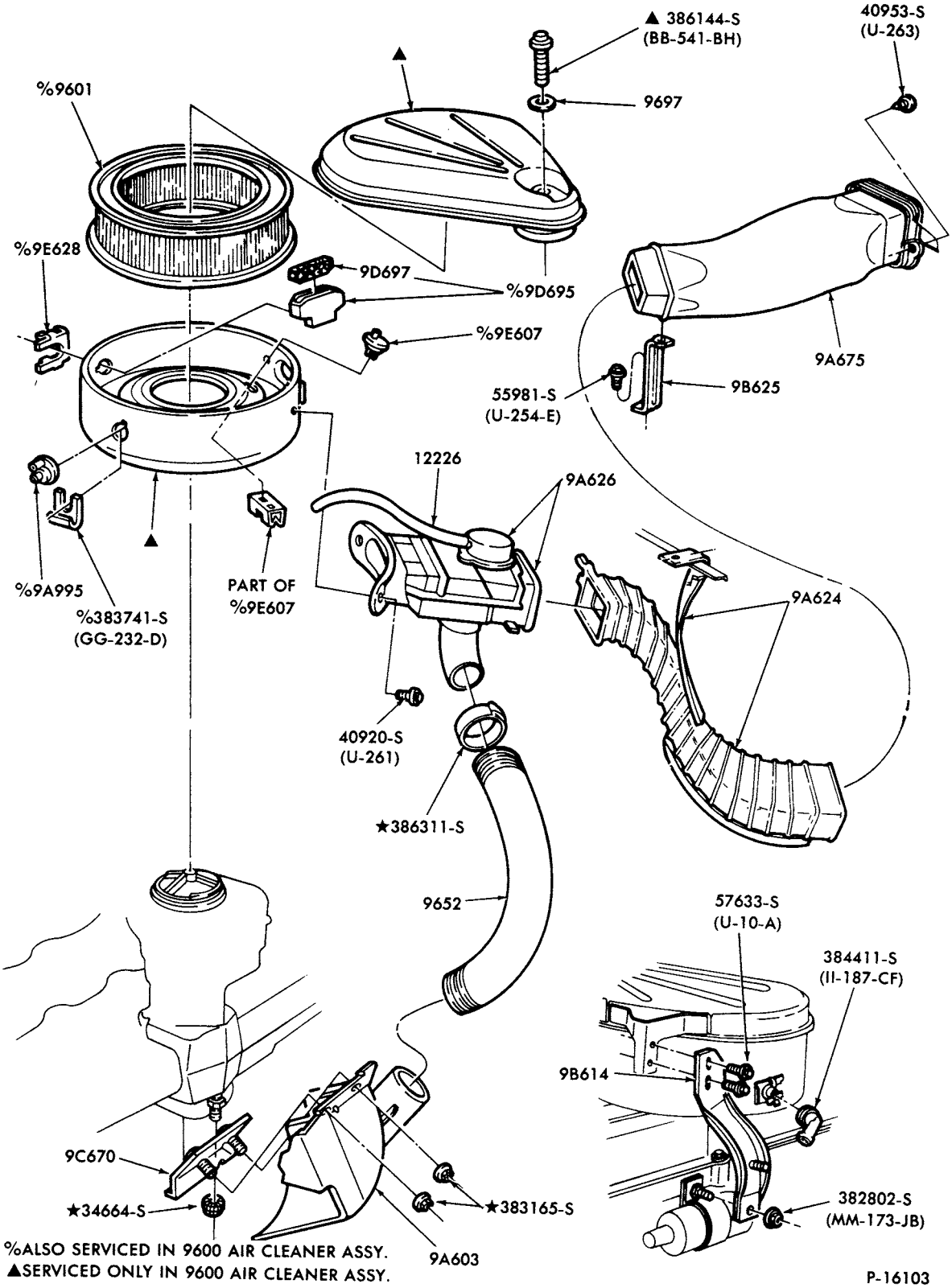

AIR CLEANER and RELATED PARTS
1978/ E100/350--6 CYL. 300

COPYRIGHT © 1980 FORD MOTOR COMPANY
FORD MOTOR-DEARBORN, MICHIGAN

1973/79 TRUCK SERIES 100/500

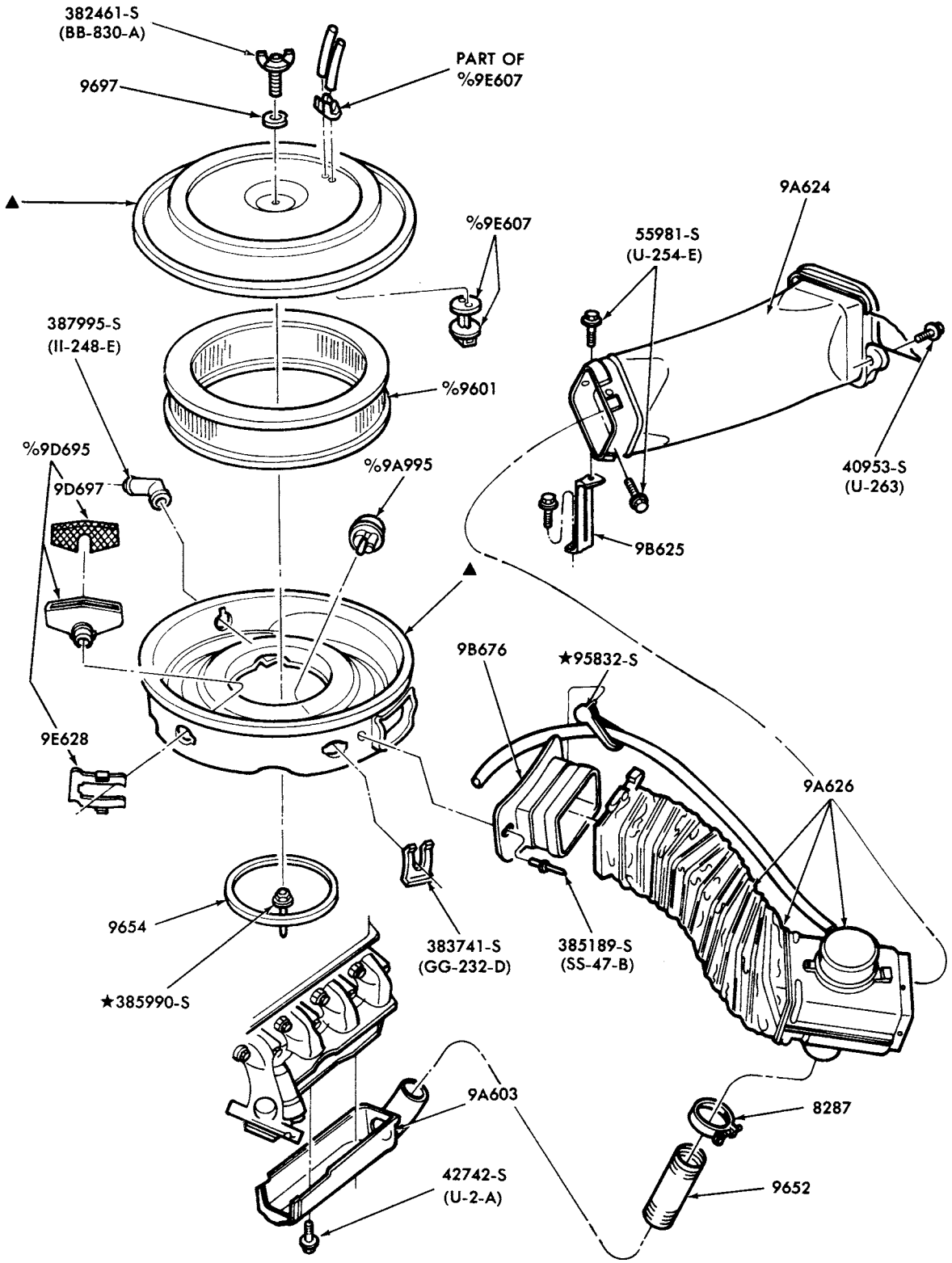

▲SERVICED ONLY IN 9600 AIR CLEANER ASSY.
%ALSO SERVICED IN 9600 AIR CLEANER ASSY.

P-16100

AIR CLEANER and RELATED PARTS
1978/ E100/250--8 CYL. 351W

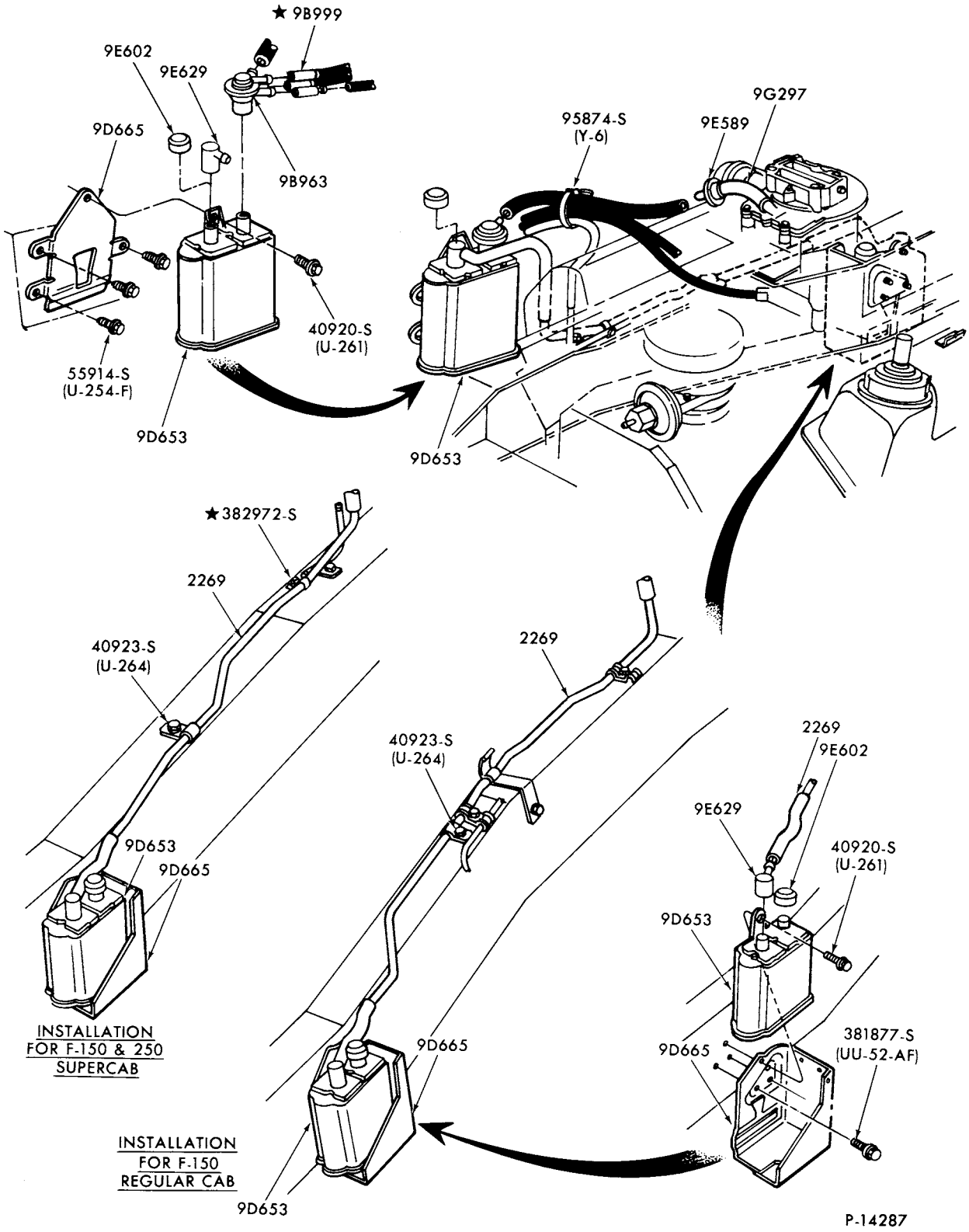

FUEL SYSTEM - VAPOR CANISTER

1978/ F150--8 CYL. 351M-CALIF. and F250--8 CYL. 400-CALIF.

COPYRIGHT © 1979 FORD MOTOR COMPANY, DEARBORN, MICHIGAN

1973/79
TRUCK SERIES 100/500

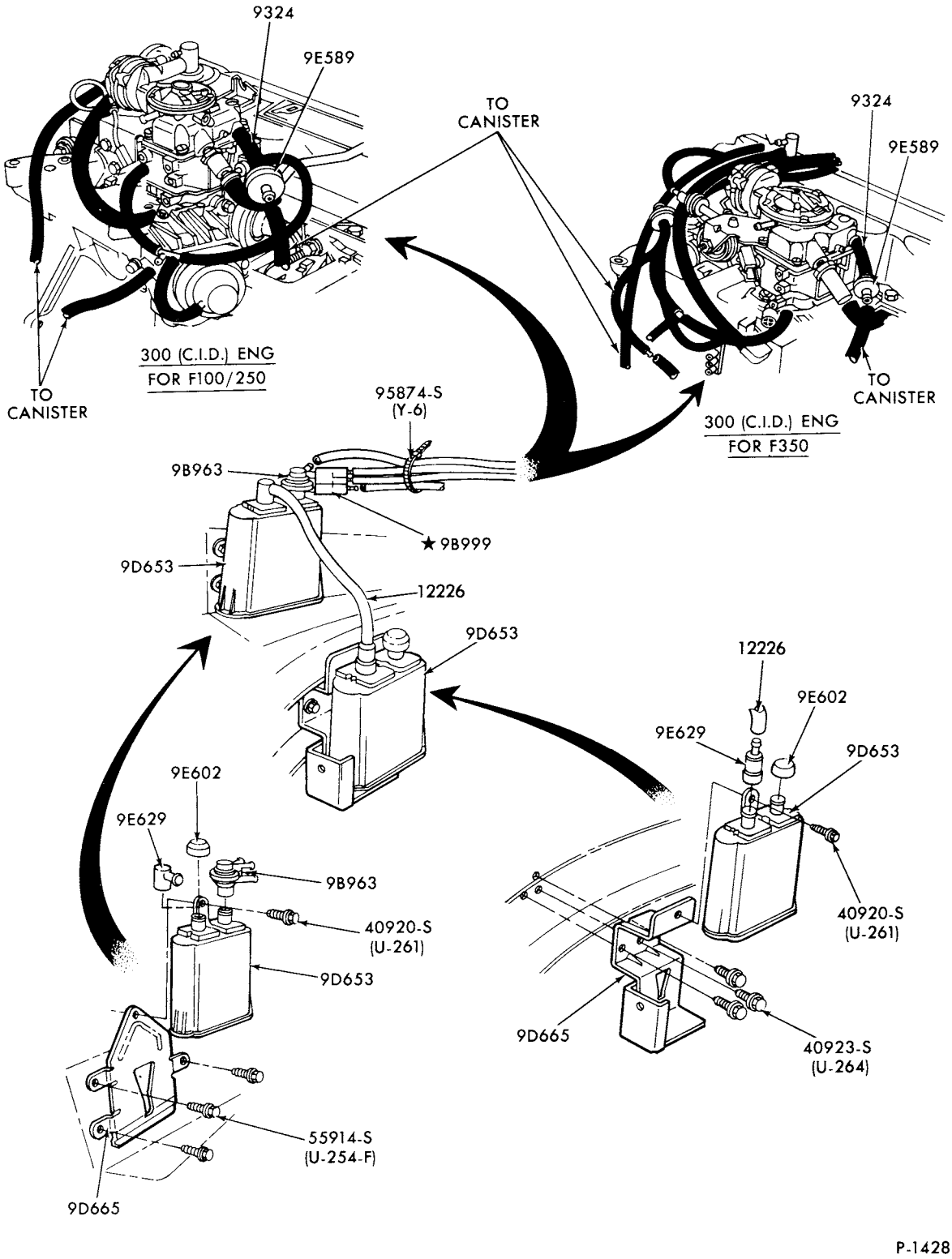

P-14285

FUEL SYSTEM - VAPOR CANISTER
1978/ F100--6 CYL. 300-EXC. CANADA and F150/350--6 CYL. 300-CALIF.

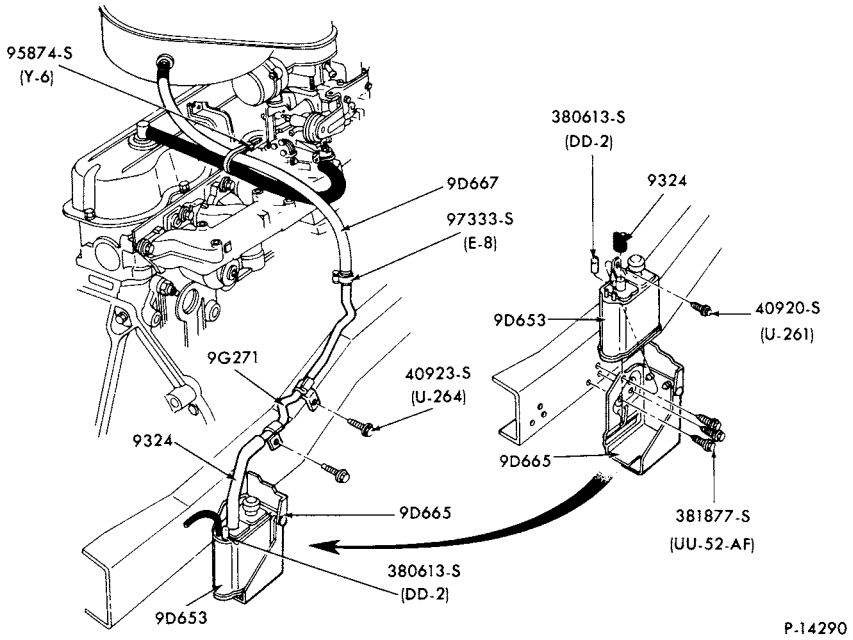

FUEL SYSTEM - VAPOR CANISTER
1978/ E100--6 CYL. 300-CANADA

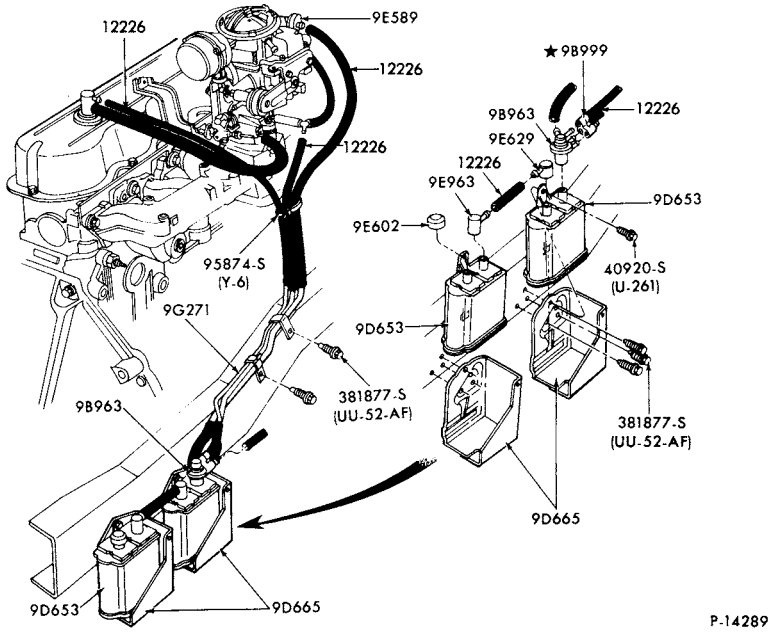

FUEL SYSTEM - VAPOR CANISTER
1978/ E100--6 CYL. 300-EXC. CANADA, E150/350--6 CYL.300-CALIF.,E100--8 CYL.351W,
E150/350--8 CYL. 351W-CALIF. and E250/350--8 CYL. 460-CALIF.

COPYRIGHT © 1979 FORD MOTOR COMPANY—DEARBORN, MICHIGAN

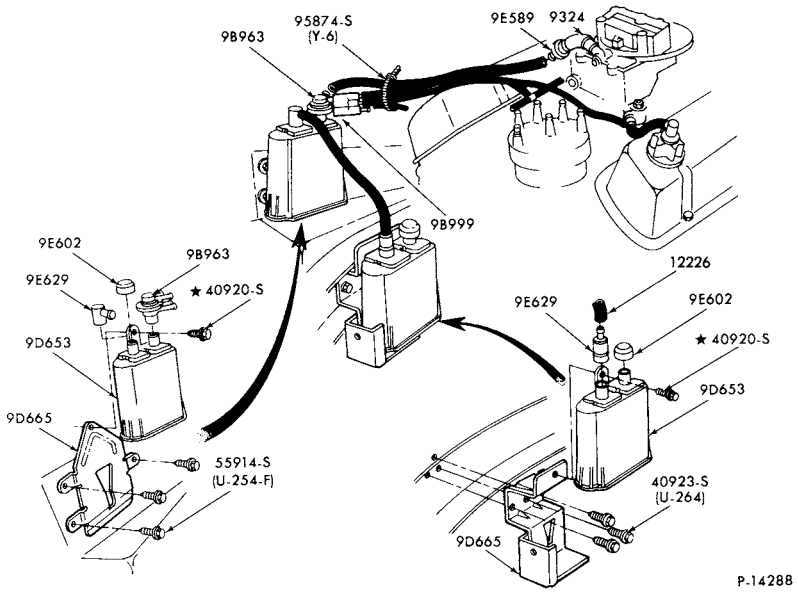

FUEL SYSTEM - VAPOR CANISTER
1978/ F100--8 CYL. 302, F150--8 CYL. 302-CALIF., F100--8 CYL. 351M, F150 and 350--8 CYL. 400-CALIF. and F150/350--8 CYL. 460-CALIF.

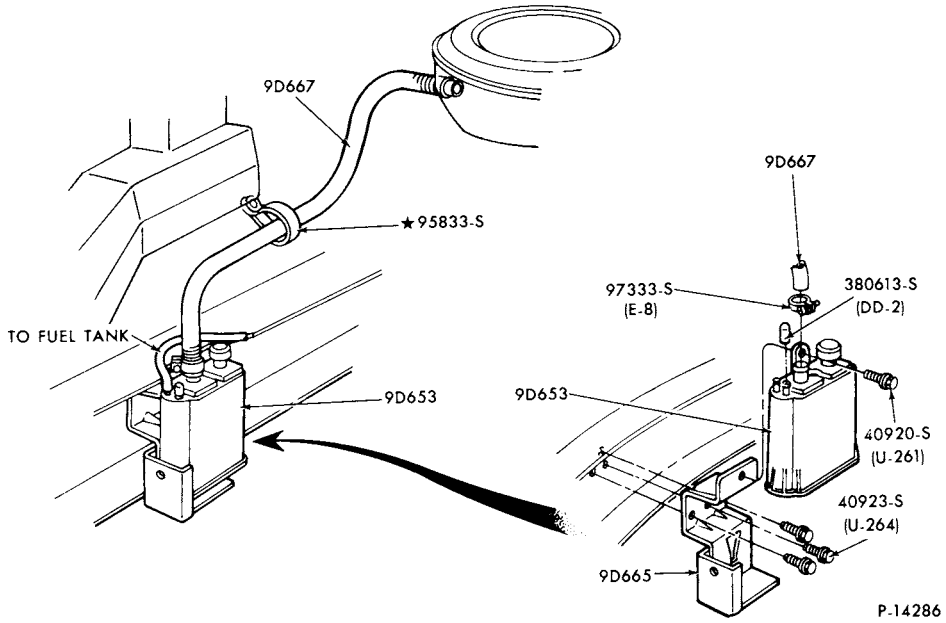

FUEL SYSTEM - VAPOR CANISTER
1978/ F100--6 CYL. 300-CANADA

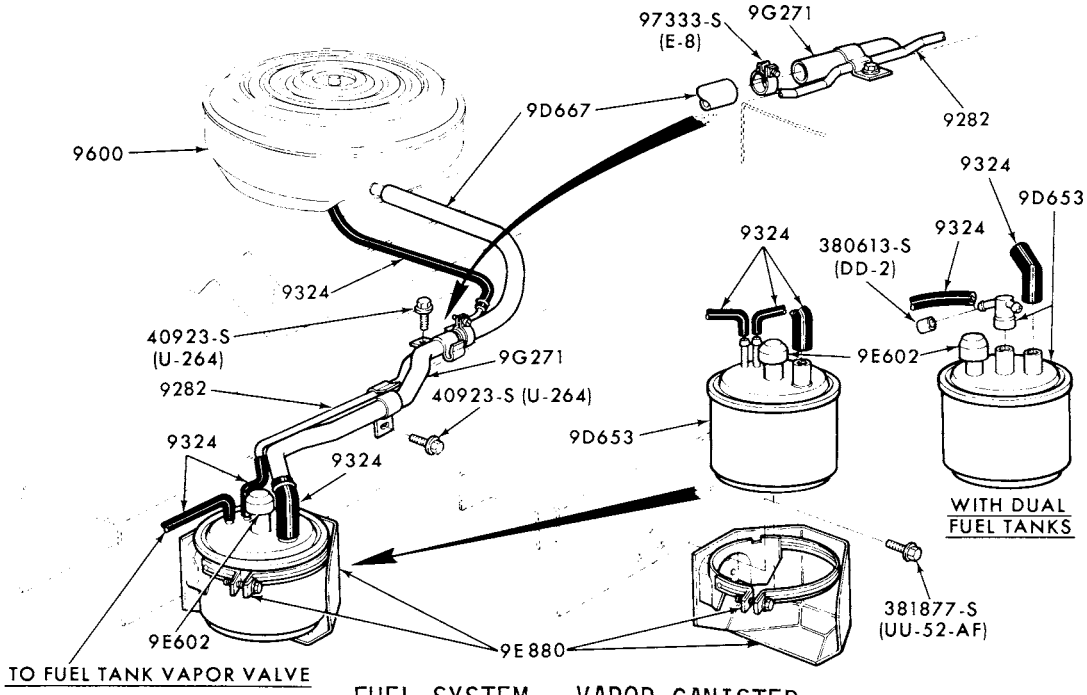

FUEL SYSTEM - VAPOR CANISTER P-11863

1975/77 E100/350--6 CYL. 300 and 8 CYL. 351W

1975/77 E250/350--8 CYL. 460

COPYRIGHT © 1979 FORD MOTOR COMPANY - DEARBORN, MICHIGAN

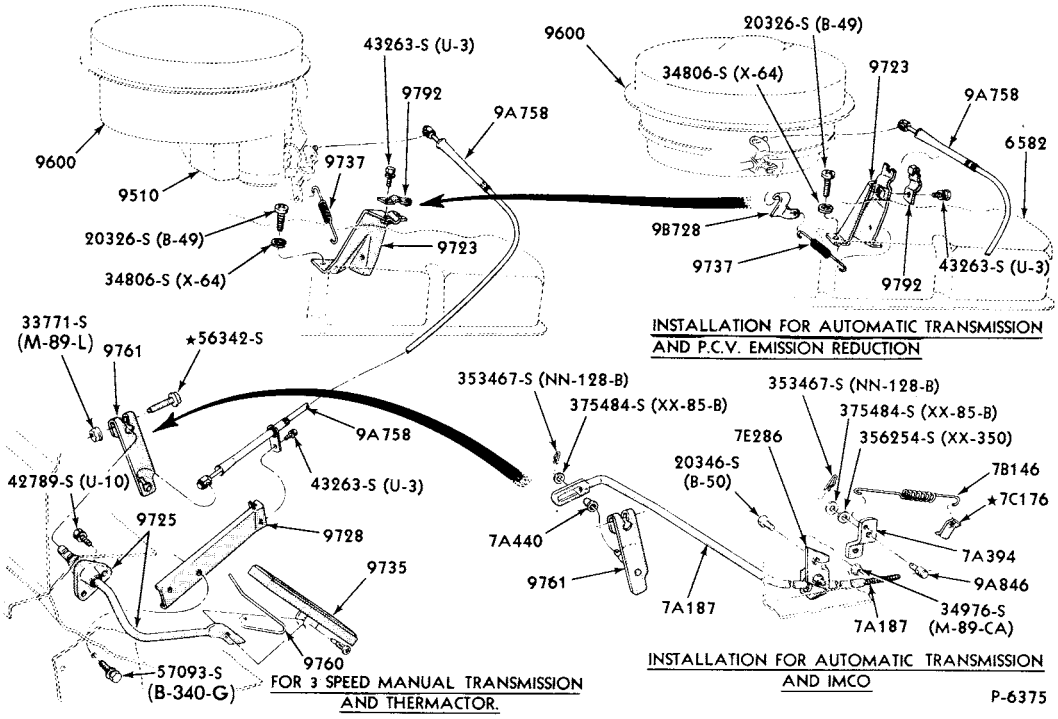

ACCELERATOR and TRANSMISSION LINKAGE
1973/74 E100/300--6 CYL. 240 and 300

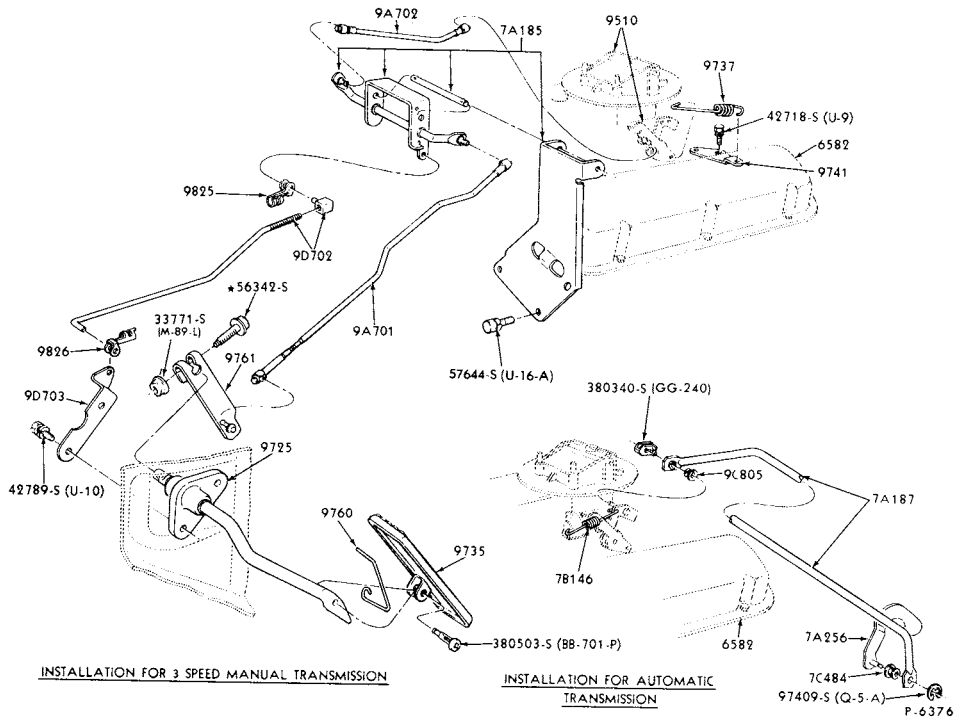

ACCELERATOR and TRANSMISSION LINKAGE
1973 E100/300--8 CYL. 302

COPYRIGHT © 1979 FORD MOTOR COMPANY, DEARBORN, MICHIGAN

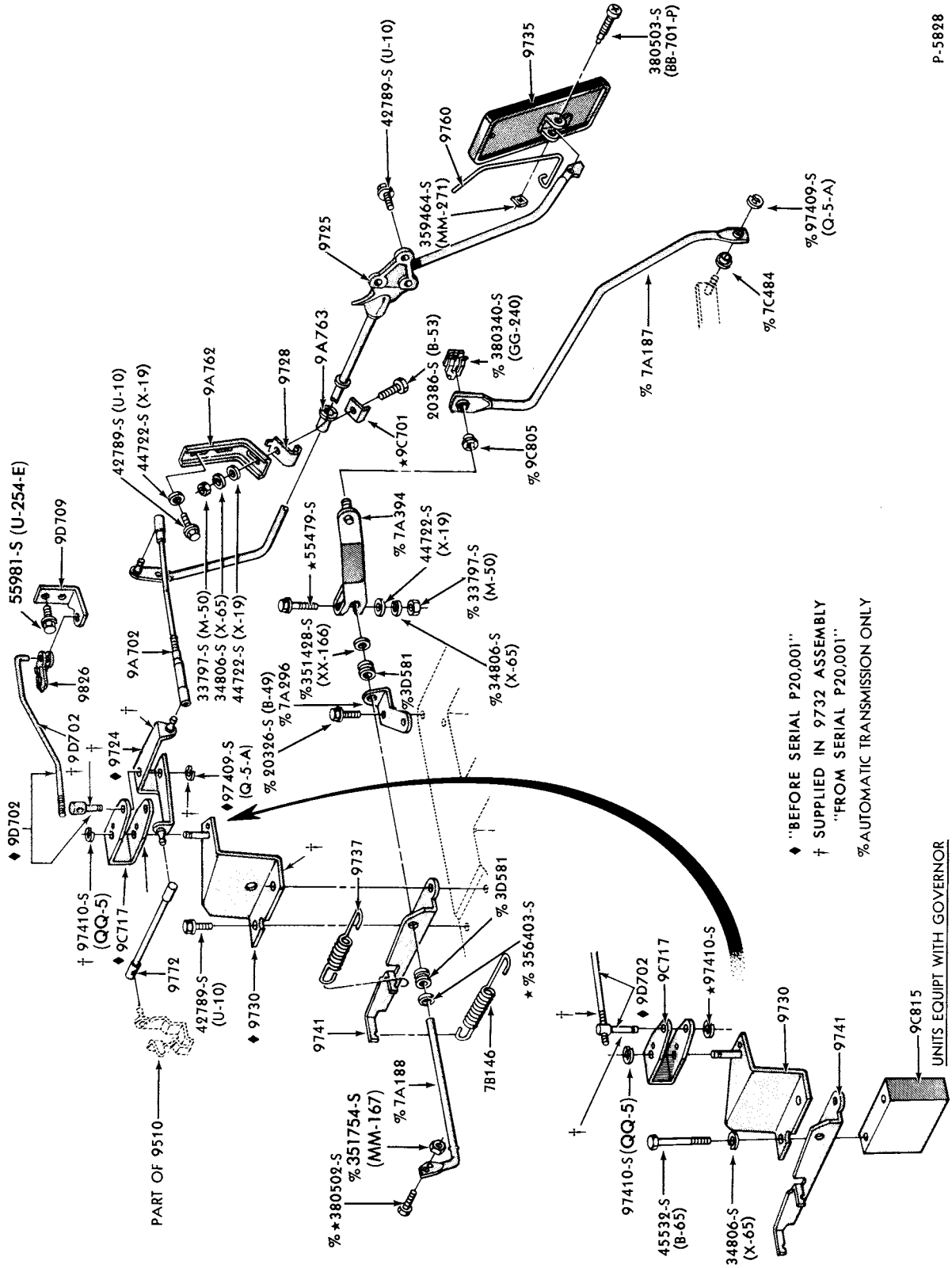

ACCELERATOR and TRANSMISSION LINKAGE
1973 F100/350--6 CYL.

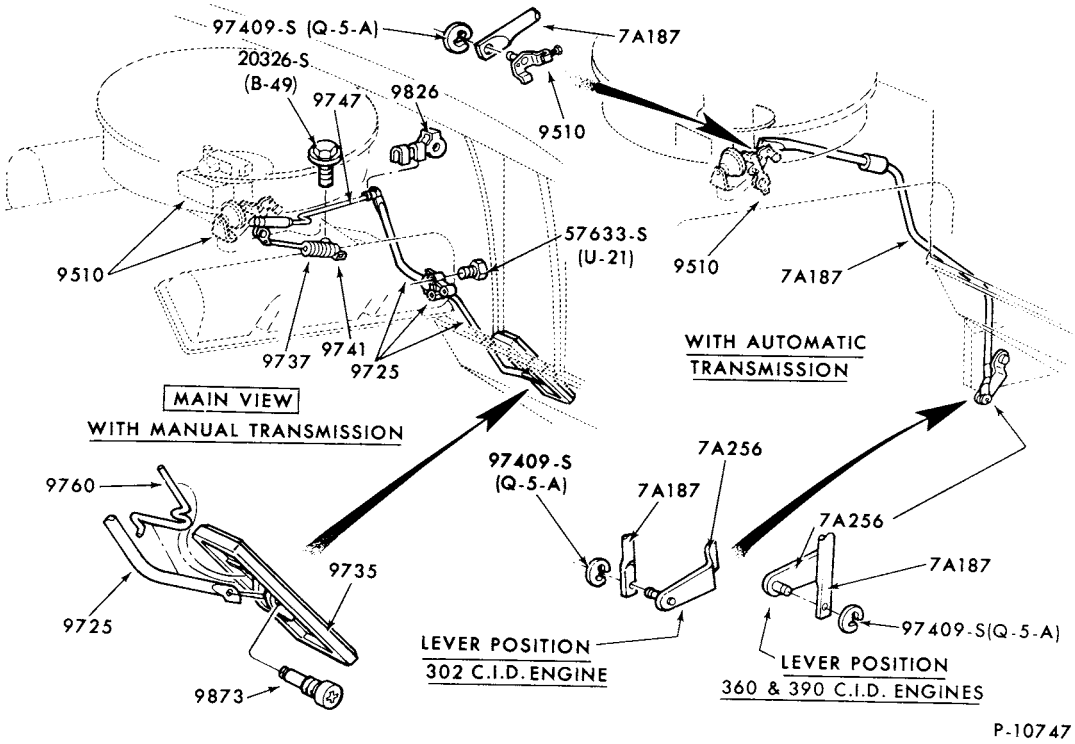

ACCELERATOR and TRANSMISSION LINKAGE
1973 F100/350--8 CYL. 302, 360 and 390

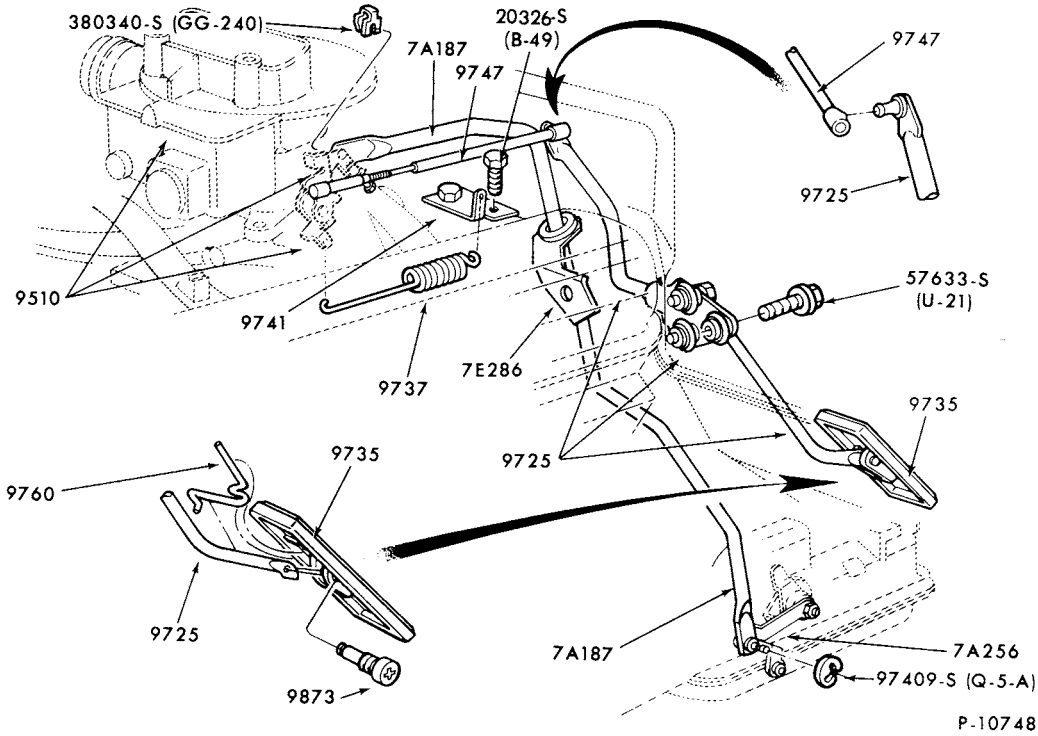

ACCELERATOR and TRANSMISSION LINKAGE
1973 F250/350--8 CYL. 460

COPYRIGHT © 1979 FORD MOTOR COMPANY, DEARBORN, MICHIGAN

1973/79 TRUCK SERIES 100/500

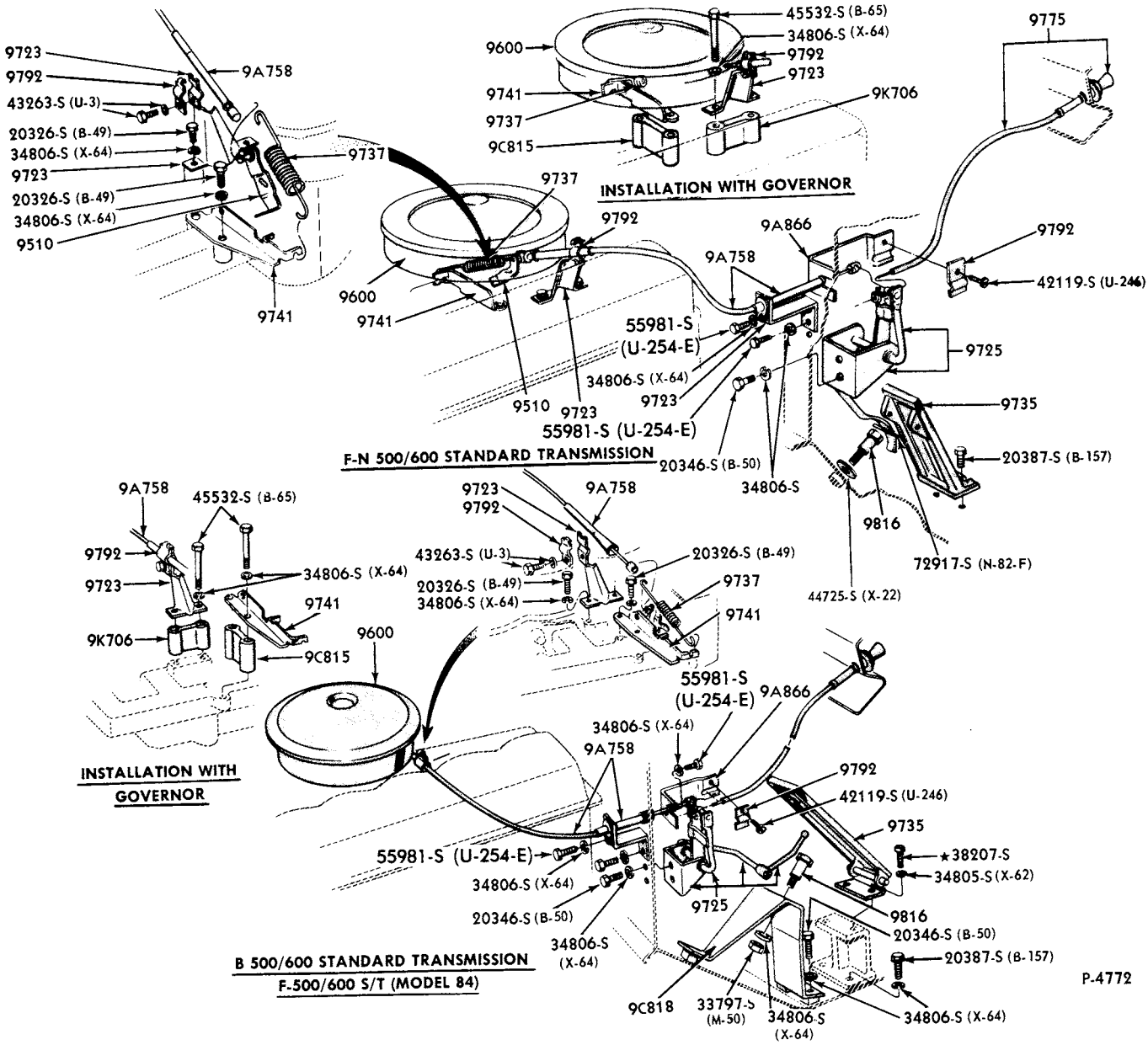

ACCELERATOR LINKAGE
1973 B-F500--6 CYL. 300

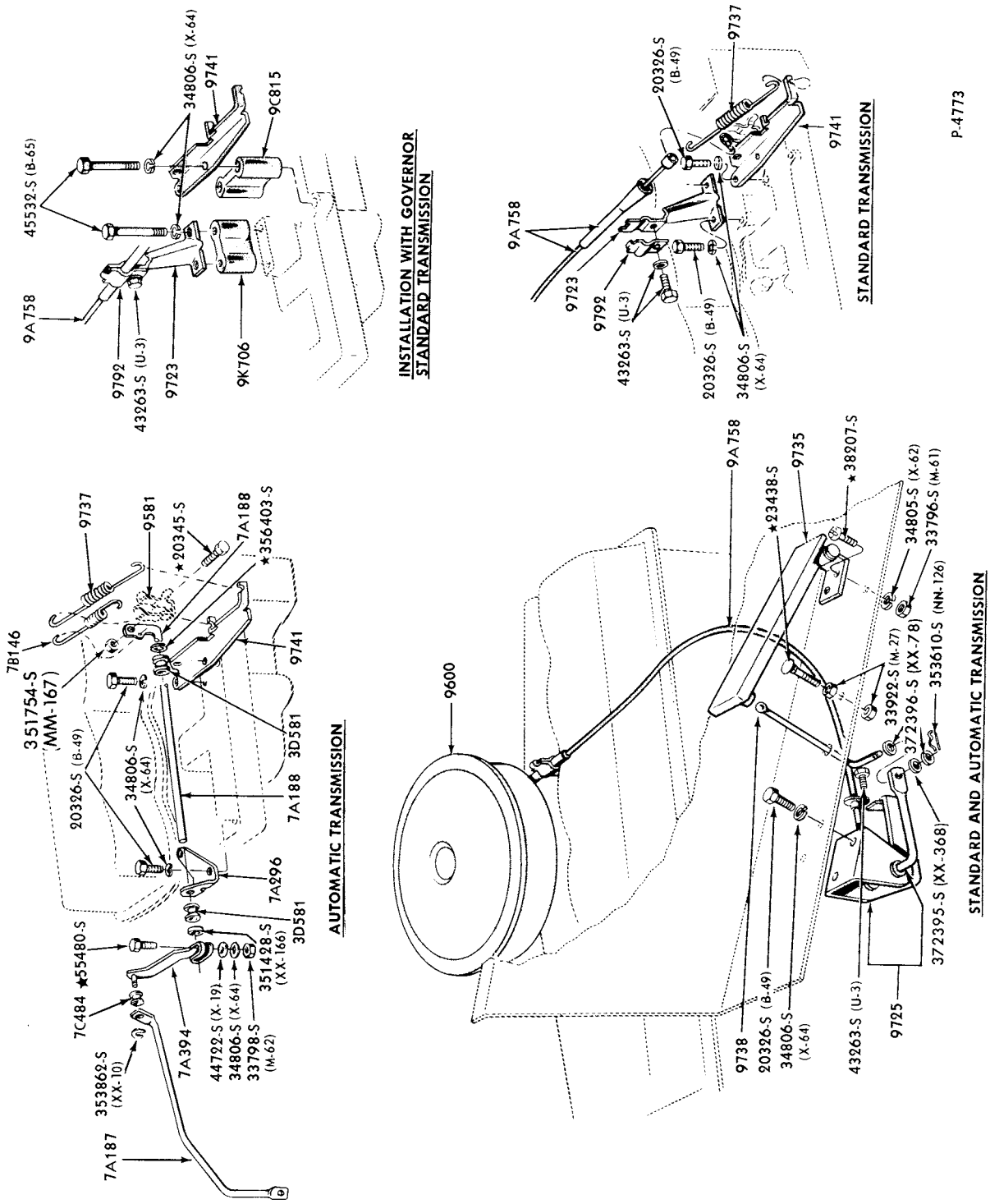

ACCELERATOR and TRANSMISSION LINKAGE
1973 P350/500--6 CYL. 300

COPYRIGHT © 1979 FORD MOTOR COMPANY, DEARBORN, MICHIGAN

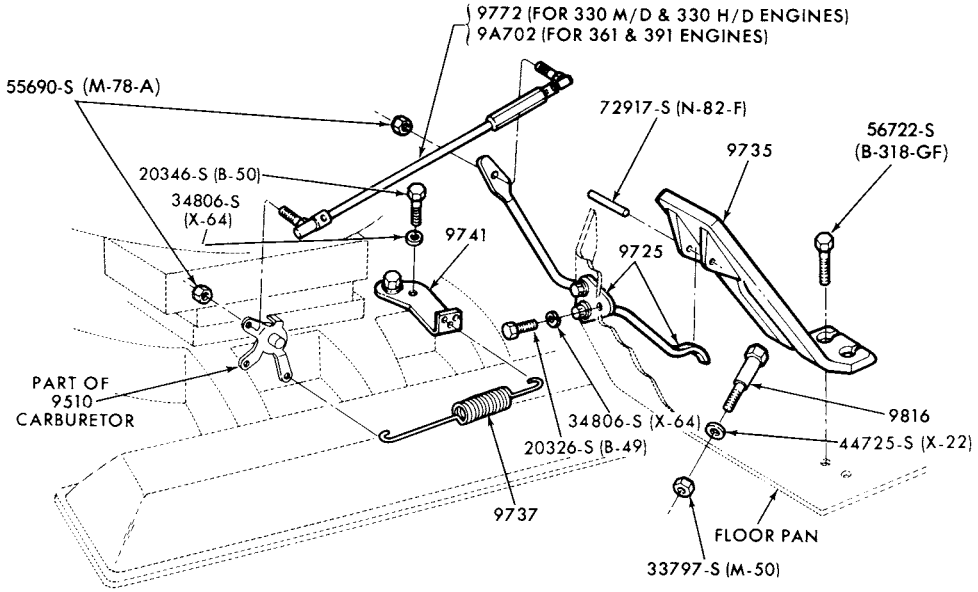

F500/750 (CAB MODELS 81)

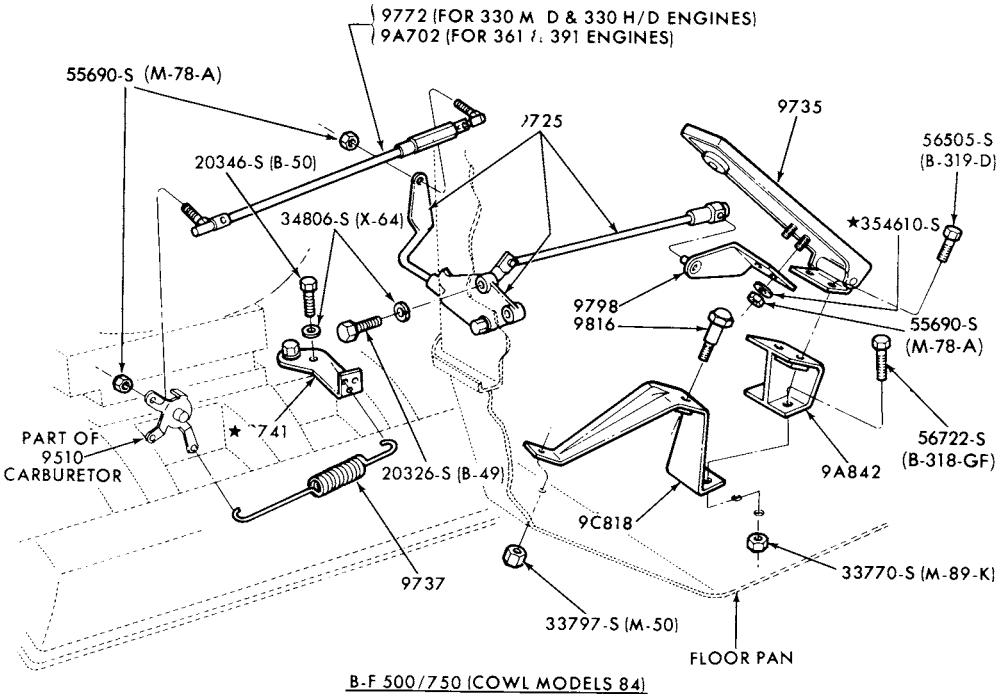

B-F 500/750 (COWL MODELS 84)

P-10750

ACCELERATOR and TRANSMISSION LINKAGE
1973 B-F500--8 CYL. 330 M/D and M/T

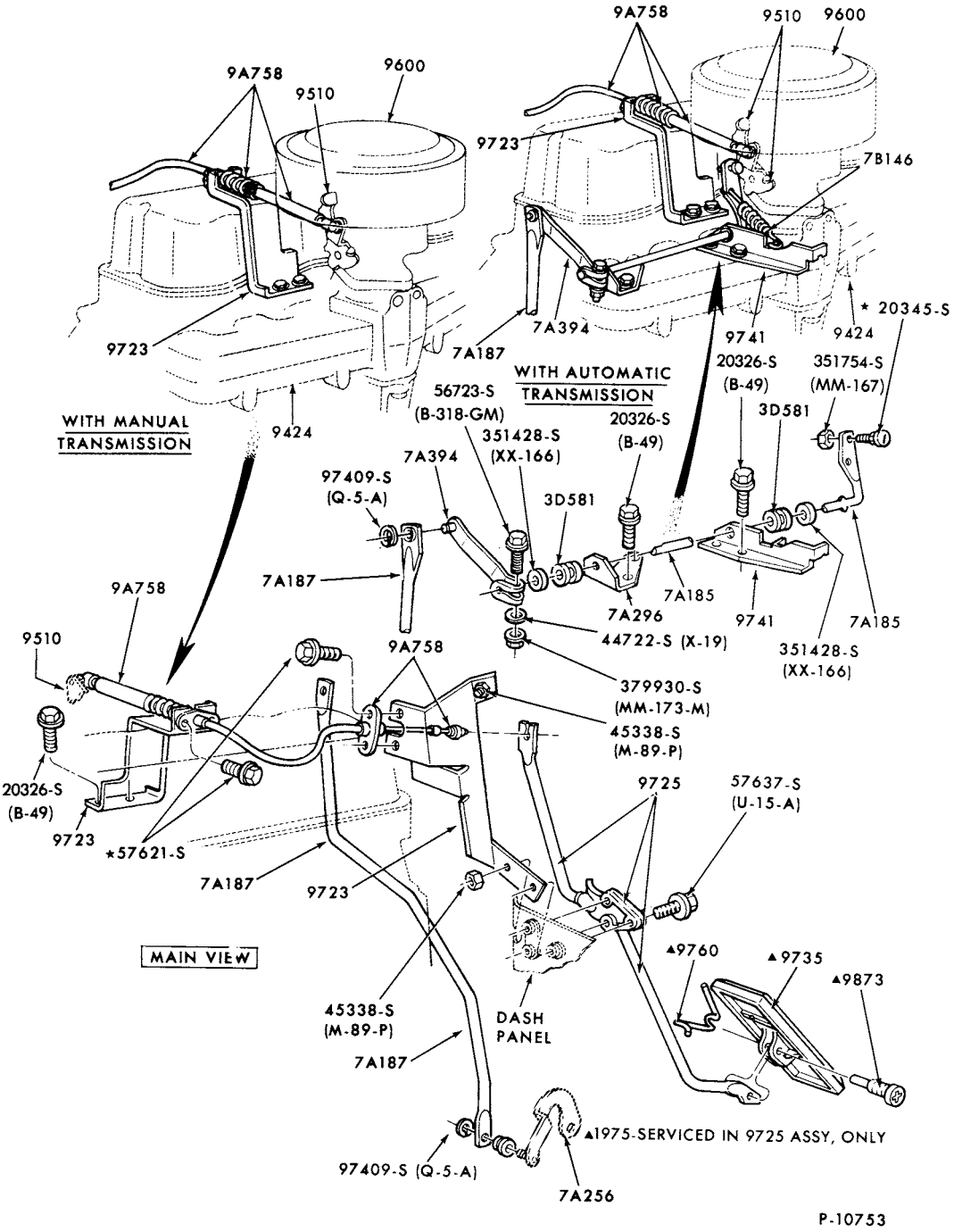

ACCELERATOR and TRANSMISSION LINKAGE
1974/76 F100/350--6 CYL.

COPYRIGHT © 1979 FORD MOTOR COMPANY, DEARBORN, MICHIGAN

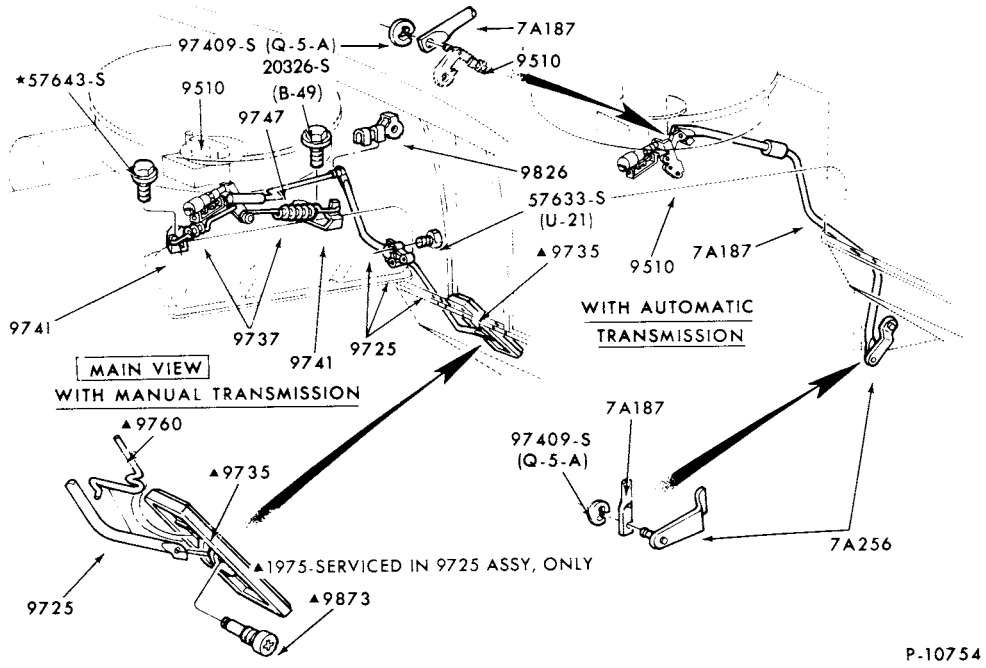

ACCELERATOR and TRANSMISSION LINKAGE
1974/ F100/150--8 CYL. 302

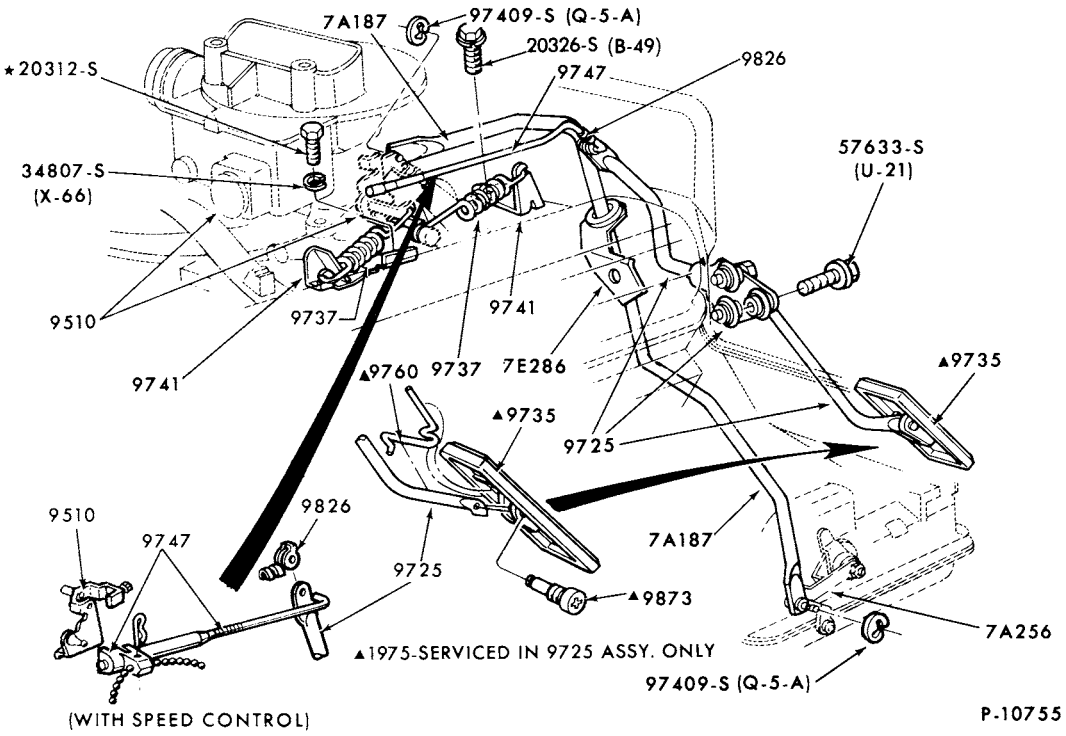

ACCELERATOR and TRANSMISSION LINKAGE
1974/78 F100/350--8 CYL. 460

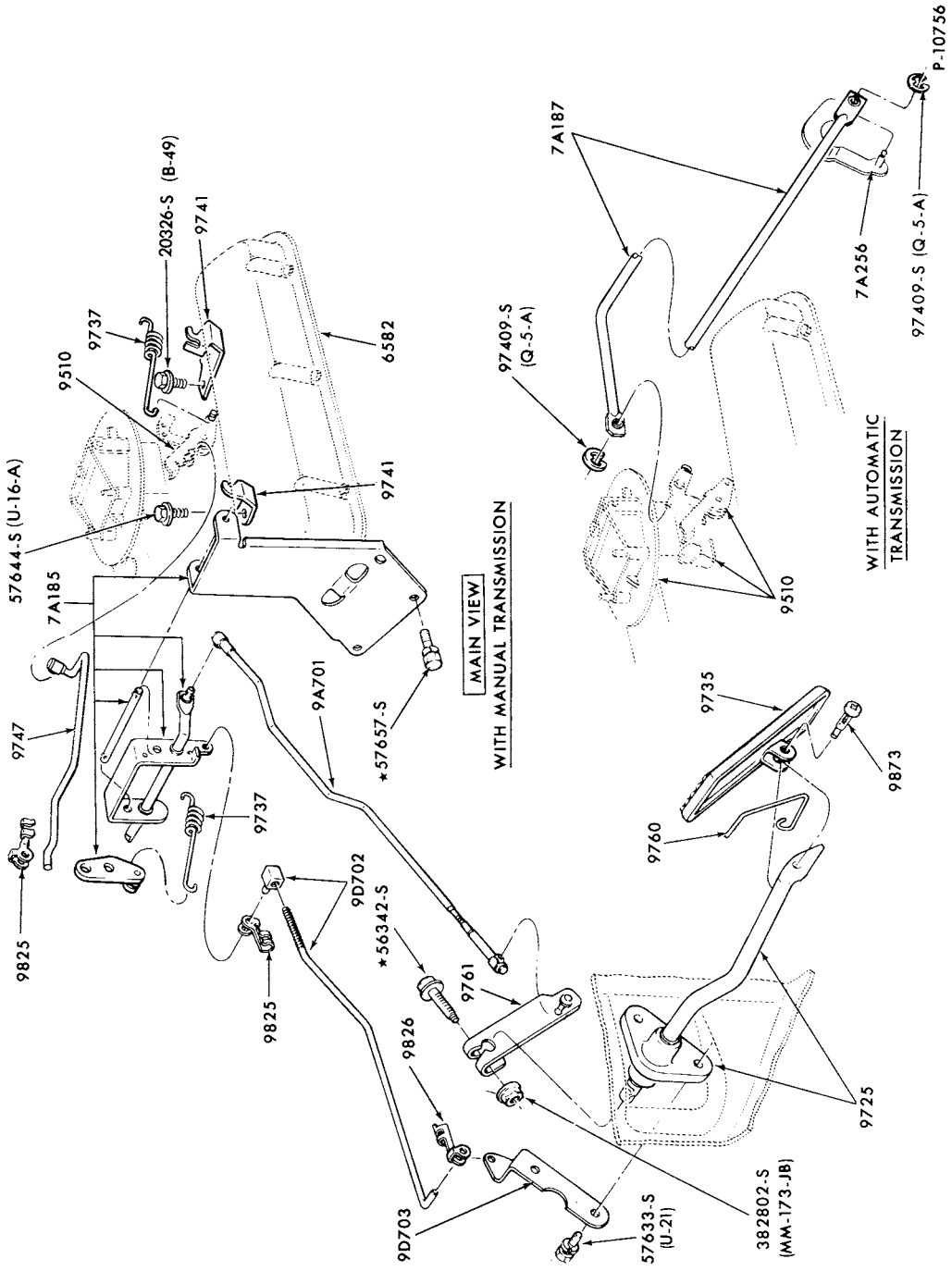

ACCELERATOR and TRANSMISSION LINKAGE
1974 E100/300--8 CYL. 302

COPYRIGHT © 1979 FORD MOTOR COMPANY DEARBORN, MICHIGAN

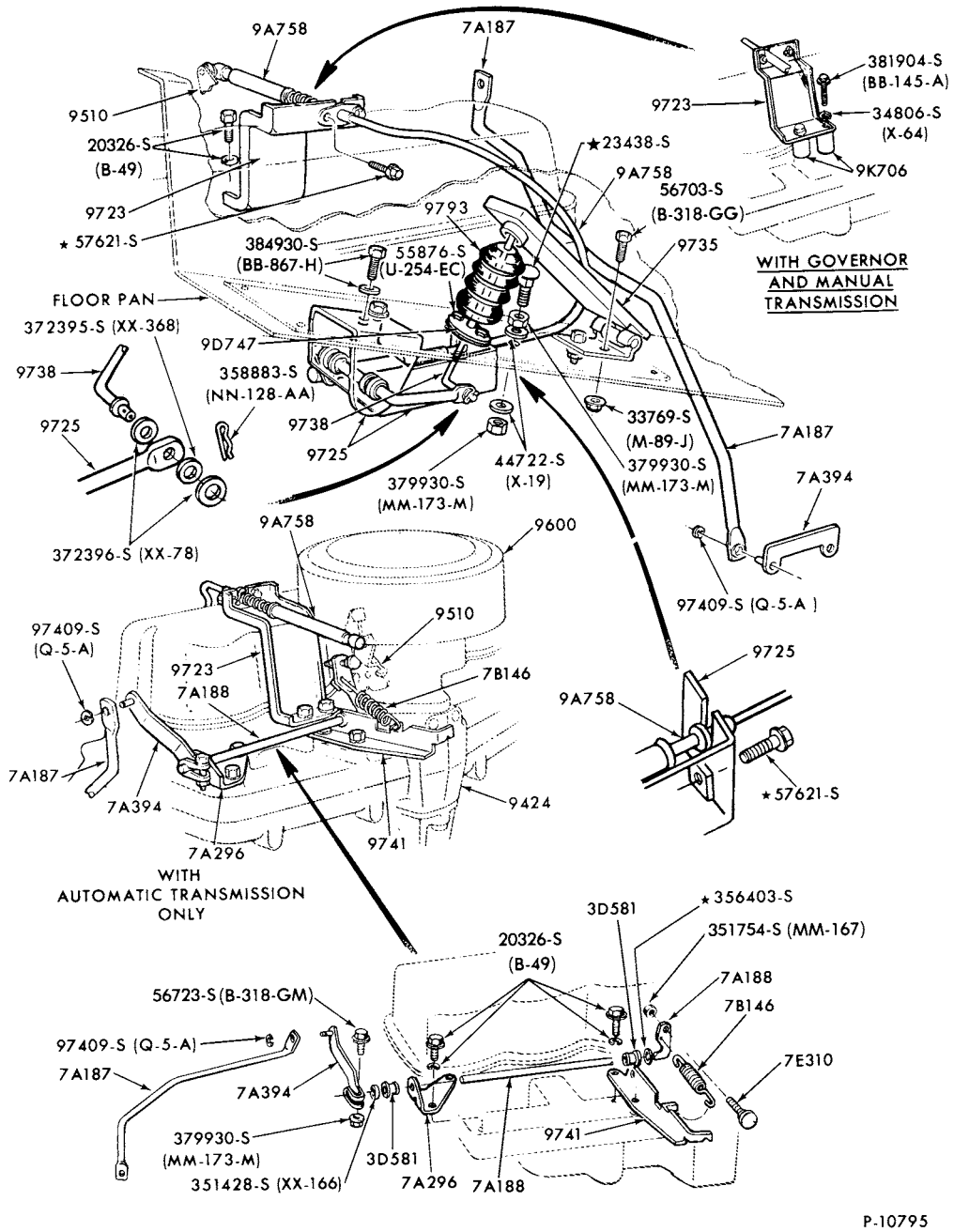

ACCELERATOR and TRANSMISSION LINKAGE
1974/77 P350/500--6 CYL. 300

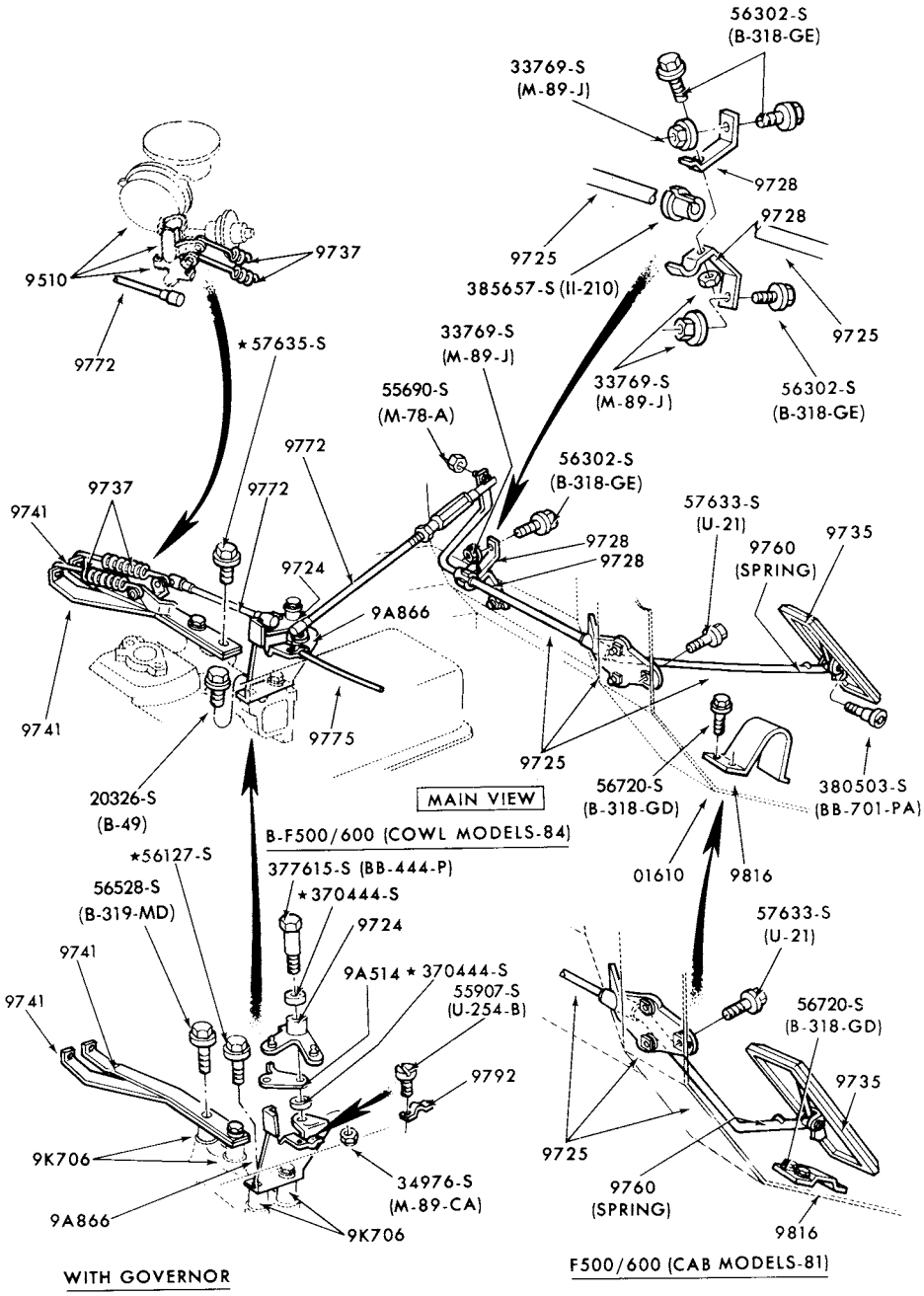

ACCELERATOR and TRANSMISSION LINKAGE
1974/77 B-F500--6 CYL. 300

COPYRIGHT © 1979 FORD MOTOR COMPANY DEARBORN, MICHIGAN

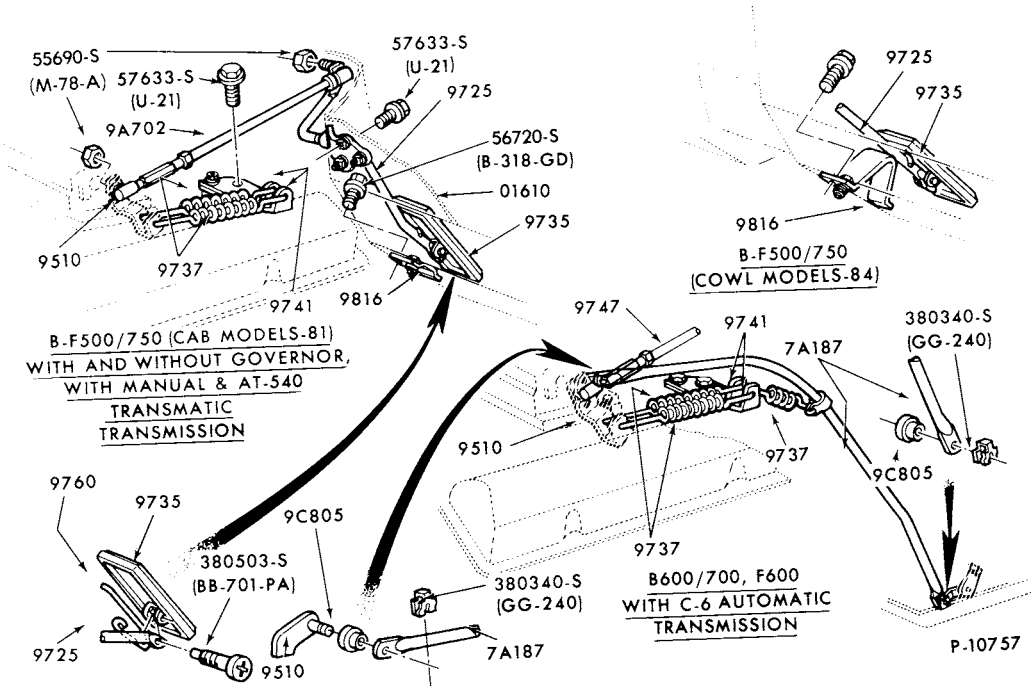

ACCELERATOR and TRANSMISSION LINKAGE
1974/77 B-F500--8 CYL. 330 M/D

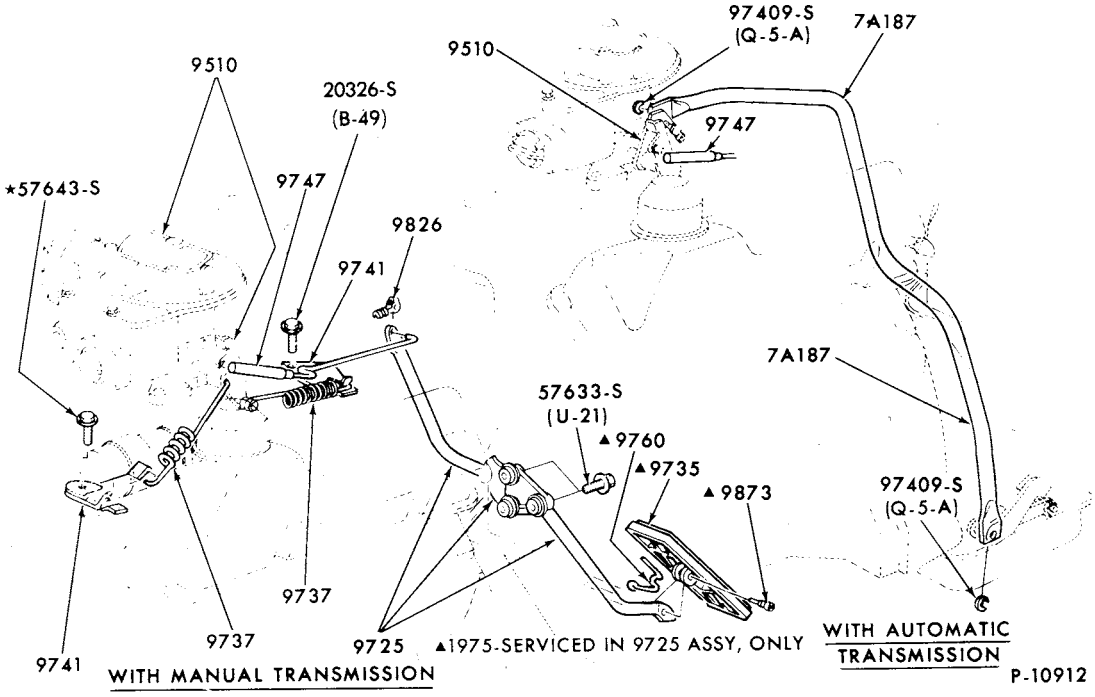

ACCELERATOR and TRANSMISSION LINKAGE
1974/76 F100/350--8 CYL. 360 and 390

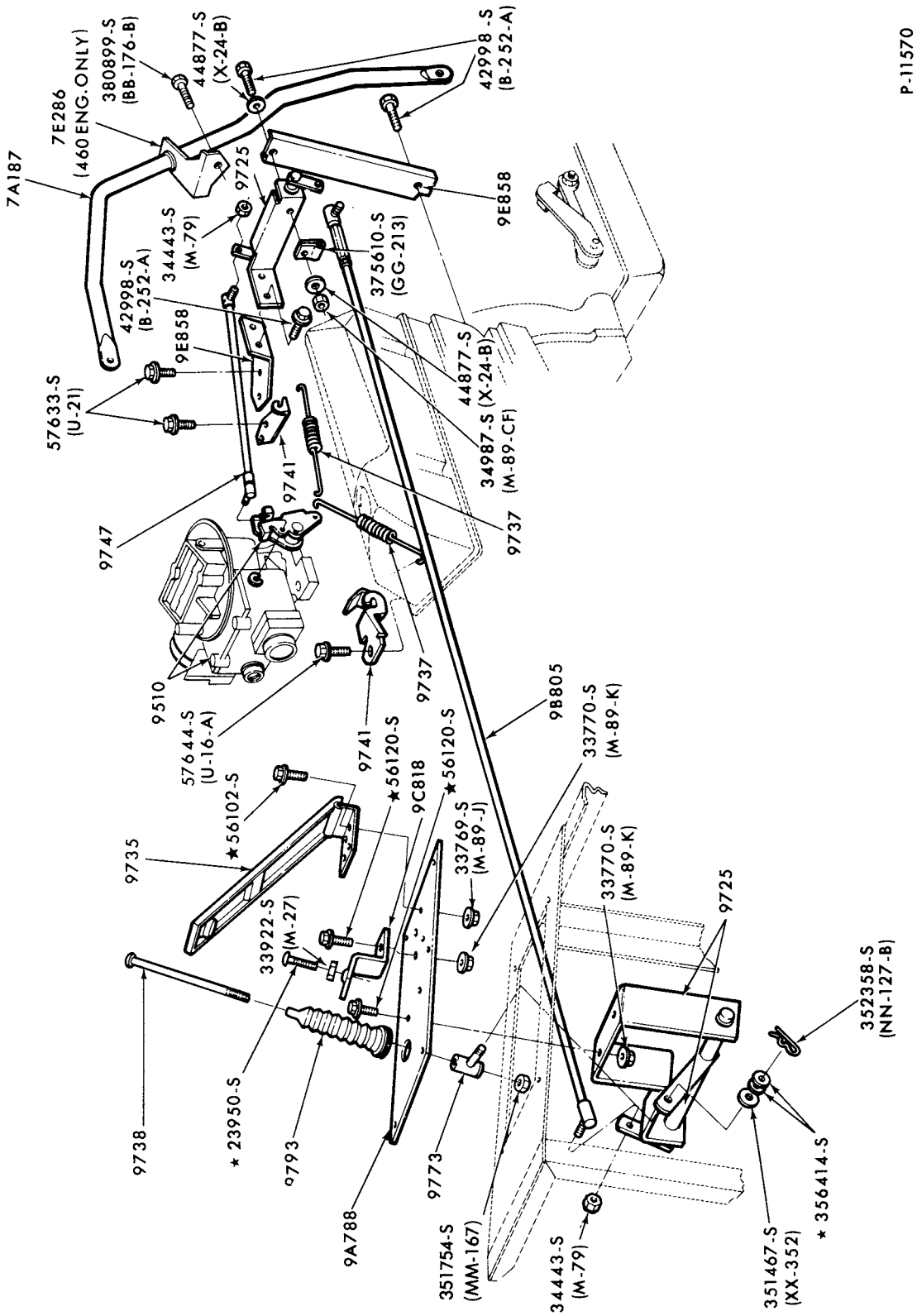

ACCELERATOR and TRANSMISSION LINKAGE

1974/76 M450/500--8 CYL. 360, 390 and 460 - "From Ser. S80,001"

COPYRIGHT © 1979 FORD MOTOR COMPANY - DEARBORN, MICHIGAN

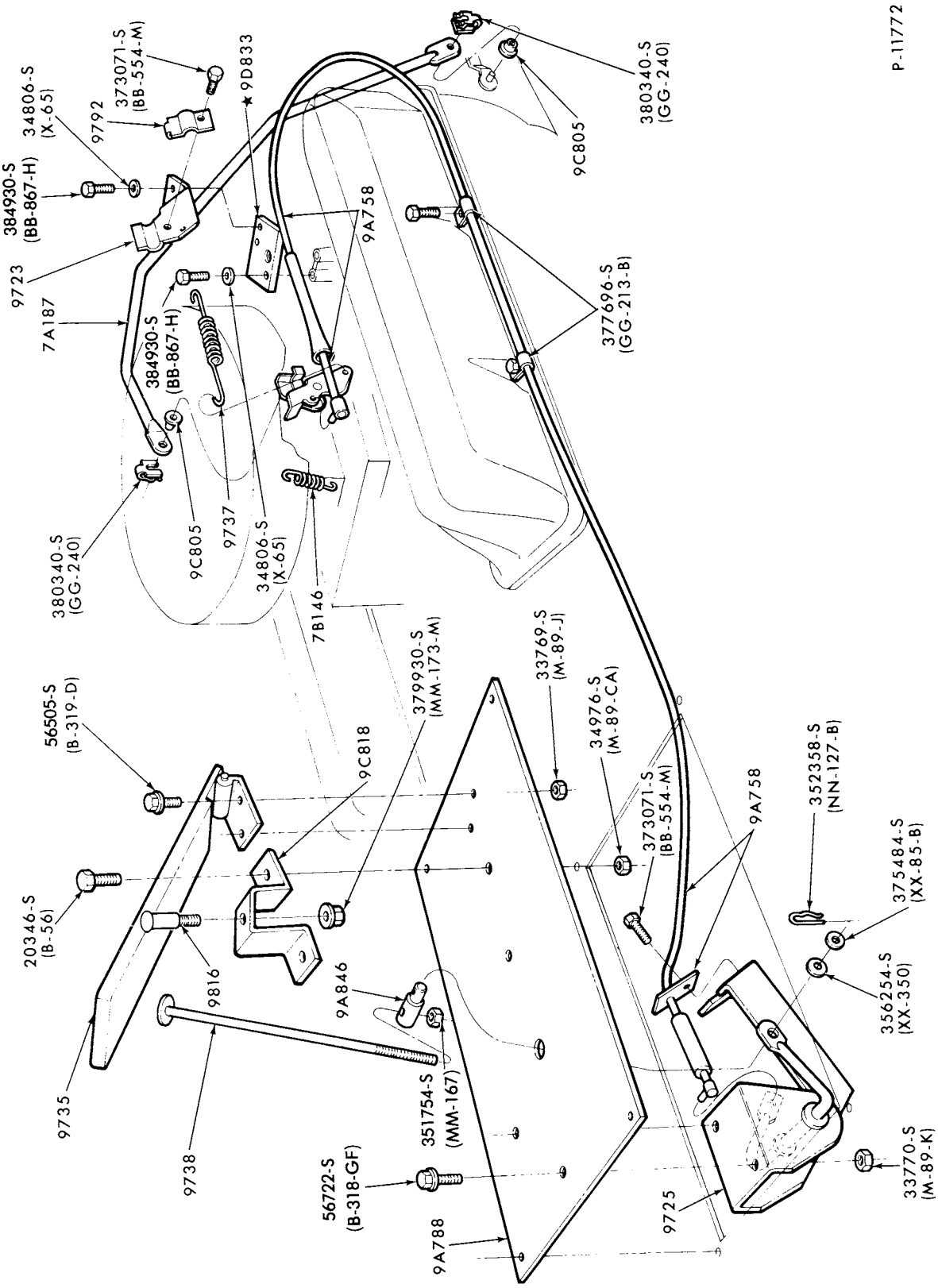

ACCELERATOR and TRANSMISSION LINKAGE

1973/74 M450/500--8 CYL. 360 and 390-"Before Ser. S80,001"

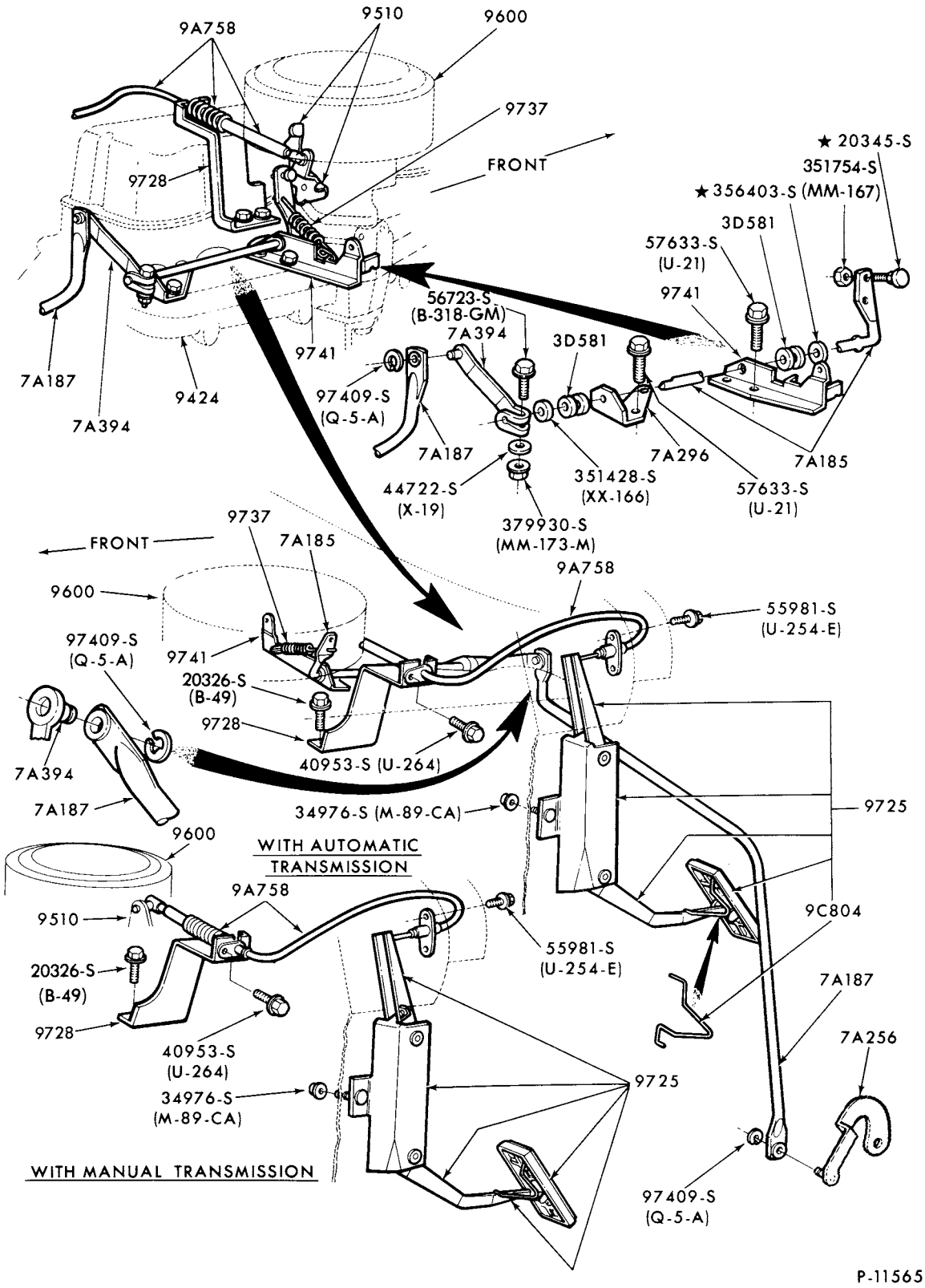

ACCELERATOR and TRANSMISSION LINKAGE
1975/ E100/350--6 CYL. 300

COPYRIGHT © 1979 FORD MOTOR COMPANY, DEARBORN, MICHIGAN

1973/79 TRUCK SERIES 100/500

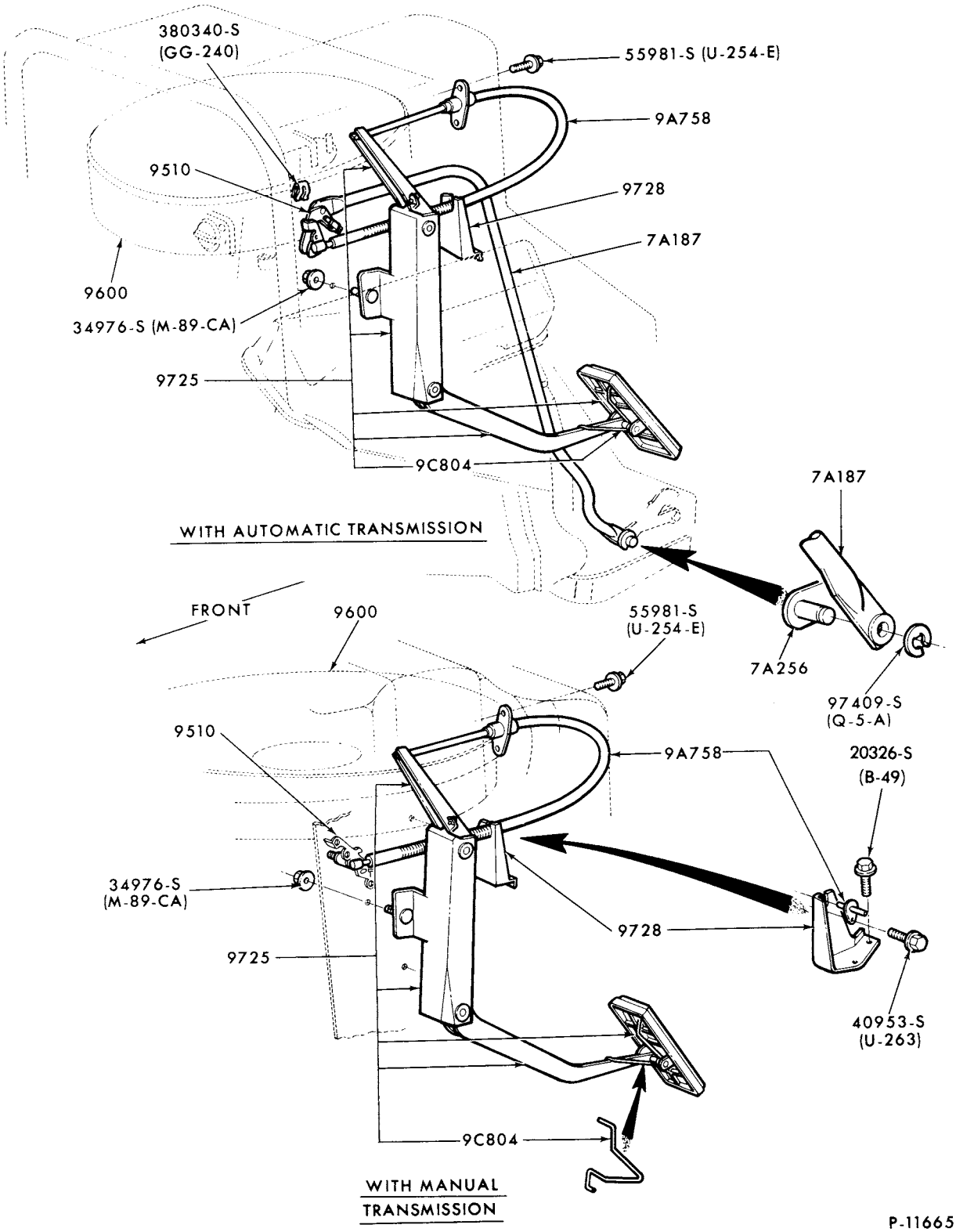

ACCELERATOR and TRANSMISSION LINKAGE
1975/ E100/350--8 CYL. 351W
1975/ E250/350--8 CYL. 460

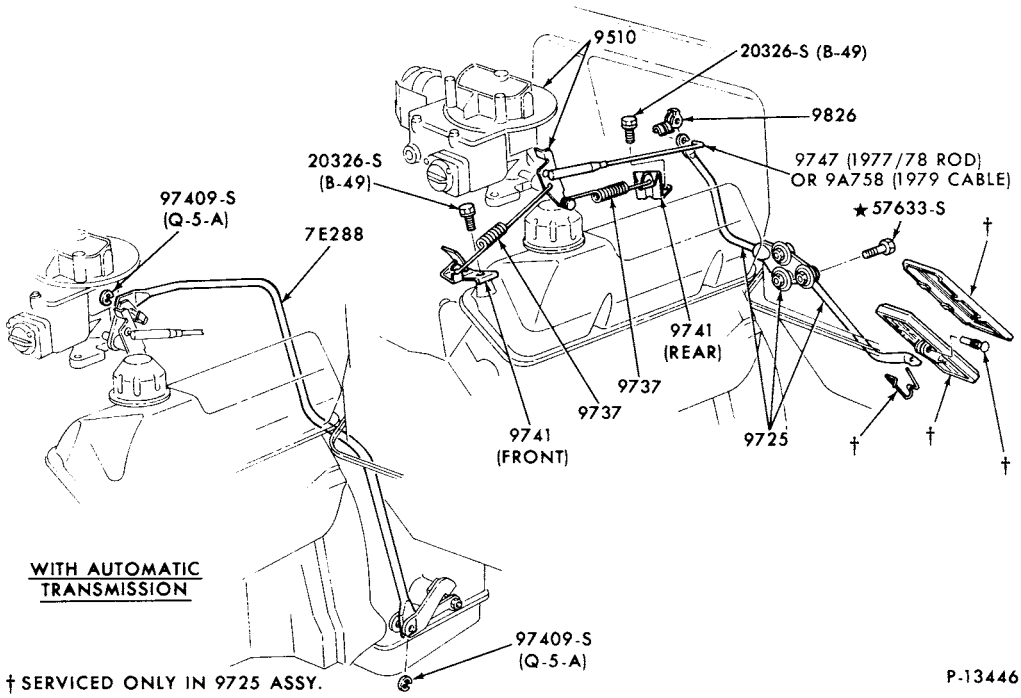

ACCELERATOR and TRANSMISSION LINKAGE
1977/ F150/350--8 CYL.351M,400

COPYRIGHT © 1979 FORD MOTOR COMPANY, DEARBORN, MICHIGAN

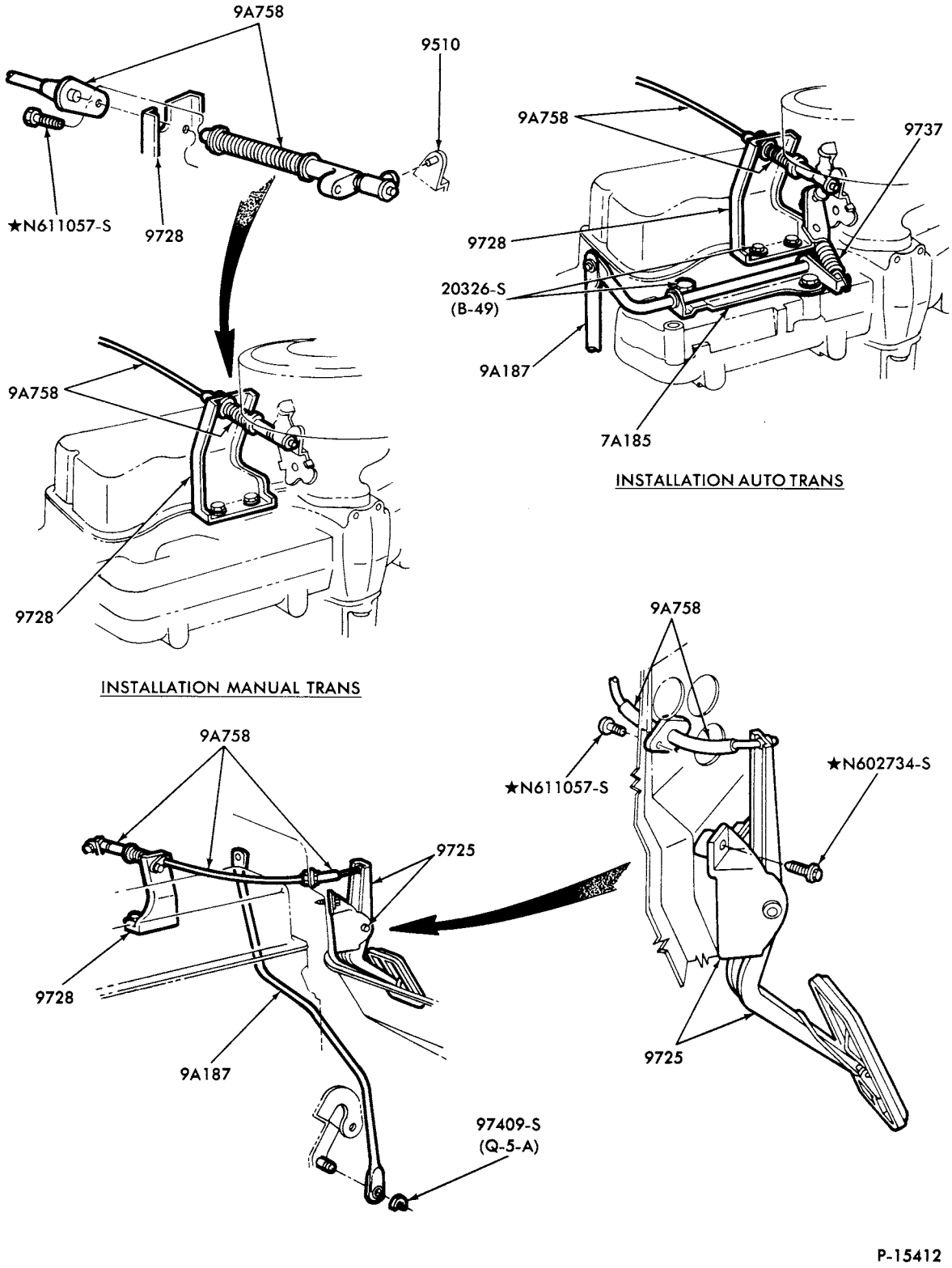

ACCELERATOR and TRANSMISSION LINKAGE
1977/79 F100/350--6 CYL.

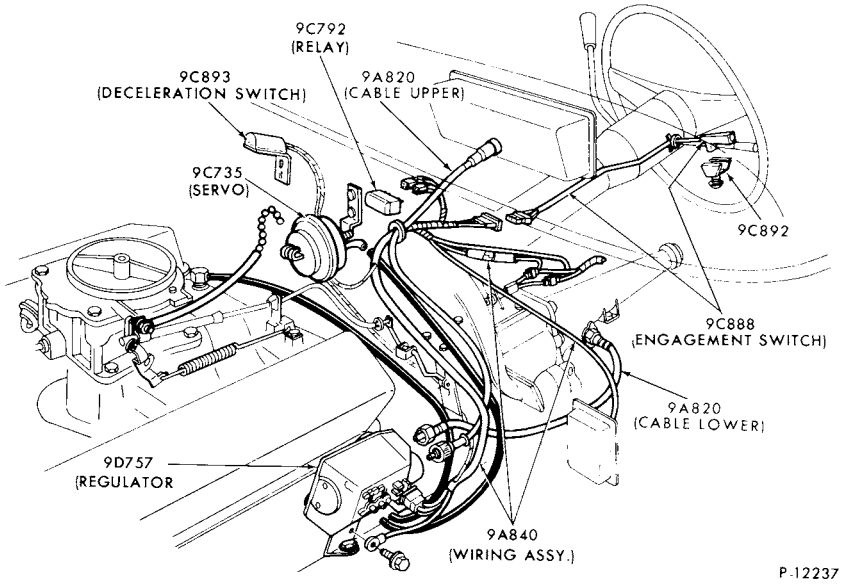

SPEED CONTROL--DEALER INSTALLED - PERFECT CIRCLE DESIGN
1973/74 E100/300--8 CYL. 302 with A/T
1975/78 E100/350--8 CYL. with A/T
1975/78 F100/350--8 CYL. with A/T

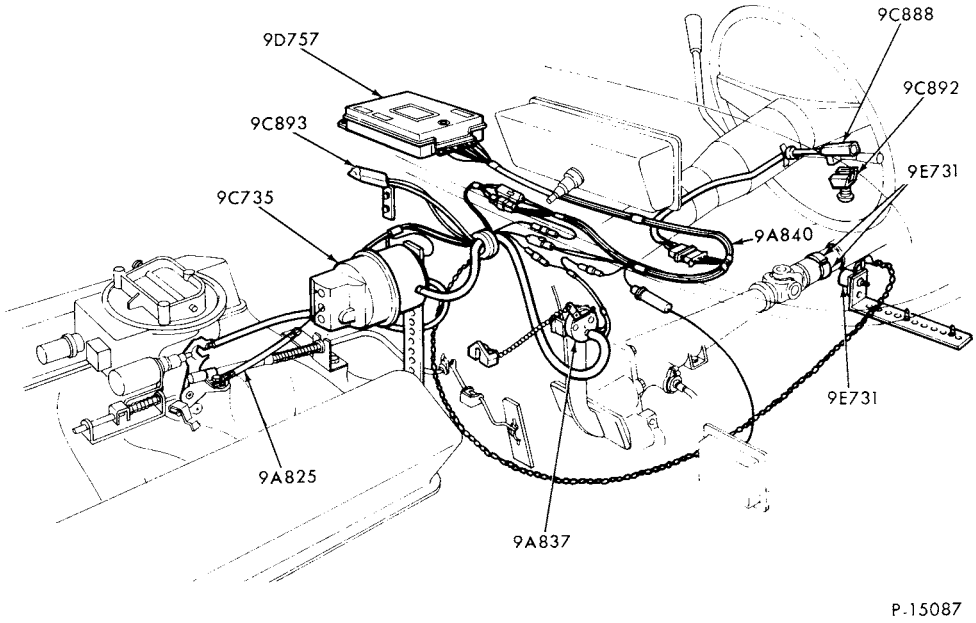

SPEED CONTROL--DEALER INSTALLED-PERFECT CIRCLE DESIGN
1979 ALL

COPYRIGHT © 1979 FORD MOTOR COMPANY, DEARBORN, MICHIGAN

1973/79
TRUCK SERIES 100/500

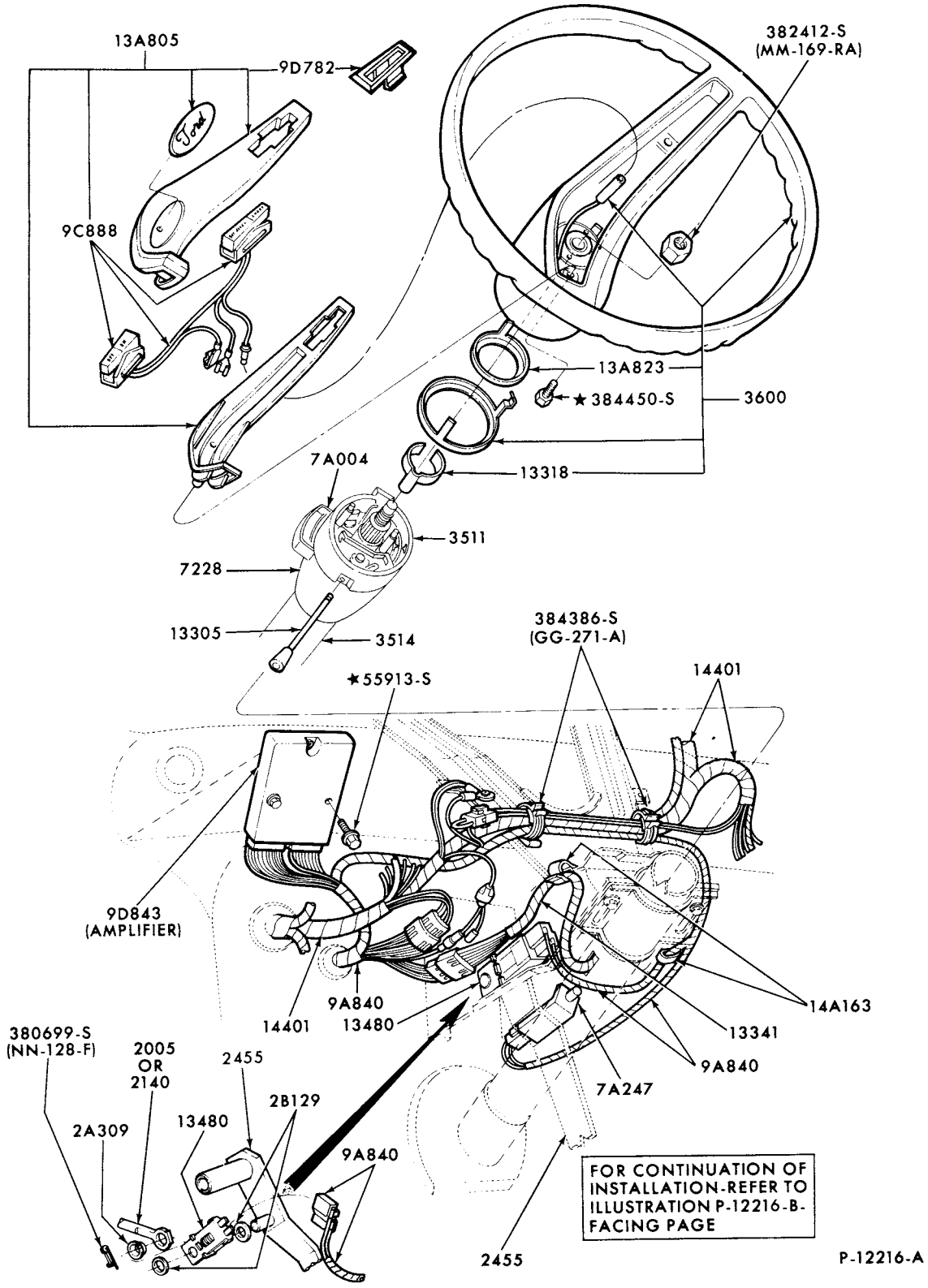

SPEED CONTROL-FACTORY INSTALLED-PASSENGER COMPARTMENT
1975/ F150/350--8 CYL. 460
1977/ F150/350--8 CYL.351M,400

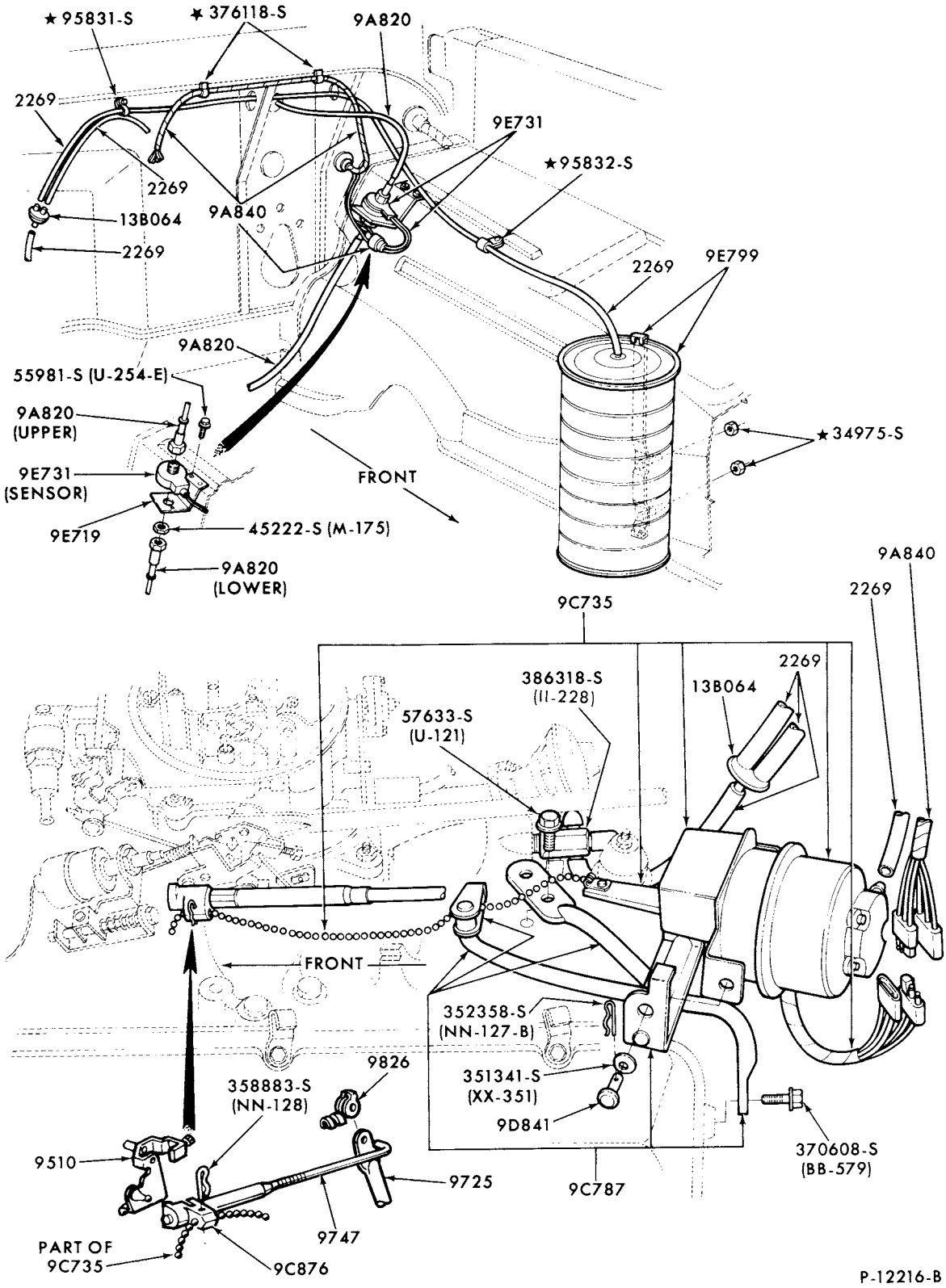

SPEED CONTROL-FACTORY INSTALLED-ENGINE COMPARTMENT
1975/78 F150/350--8 CYL. 460

COPYRIGHT © 1979 FORD MOTOR COMPANY DEARBORN, MICHIGAN

1973/79
TRUCK SERIES 100/500

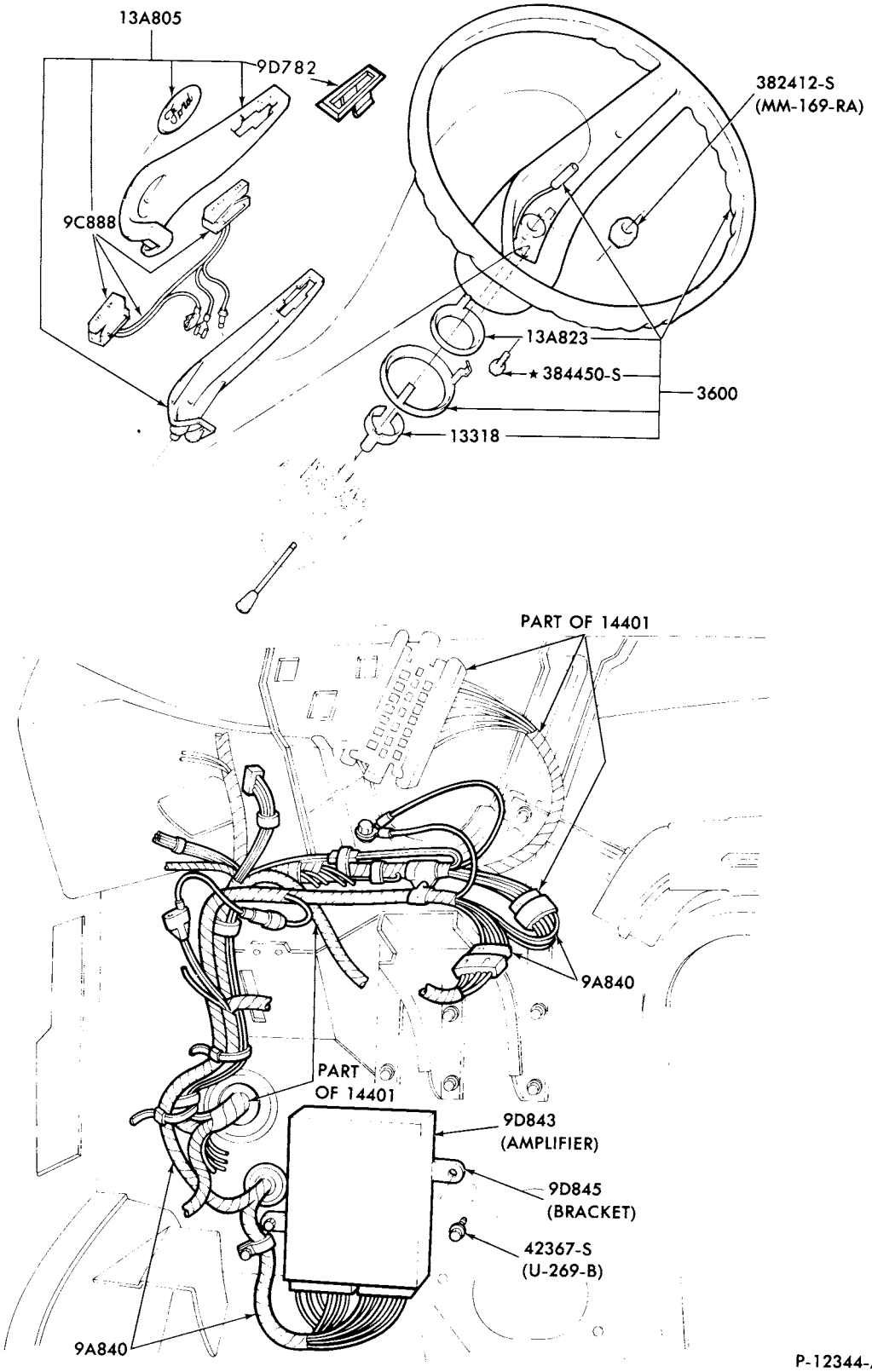

SPEED CONTROL-FACTORY INSTALLED-PASSENGER COMPARTMENT
1975/ E250/350--8 CYL. 460

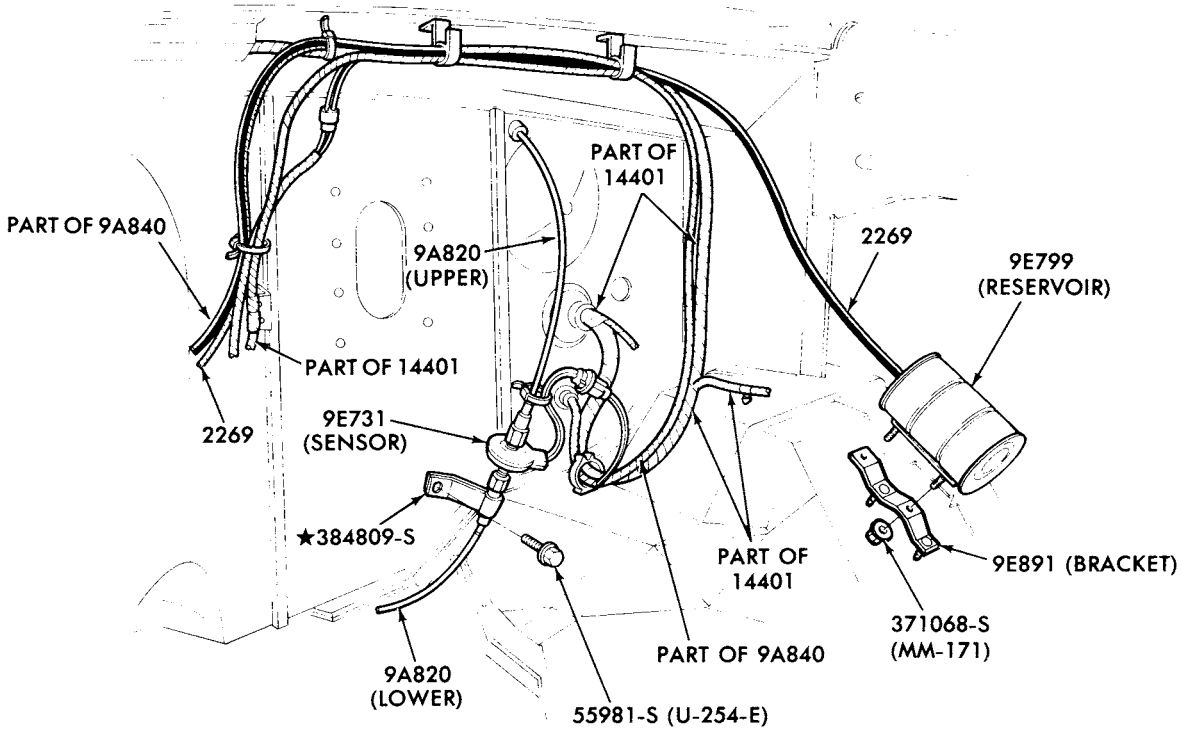

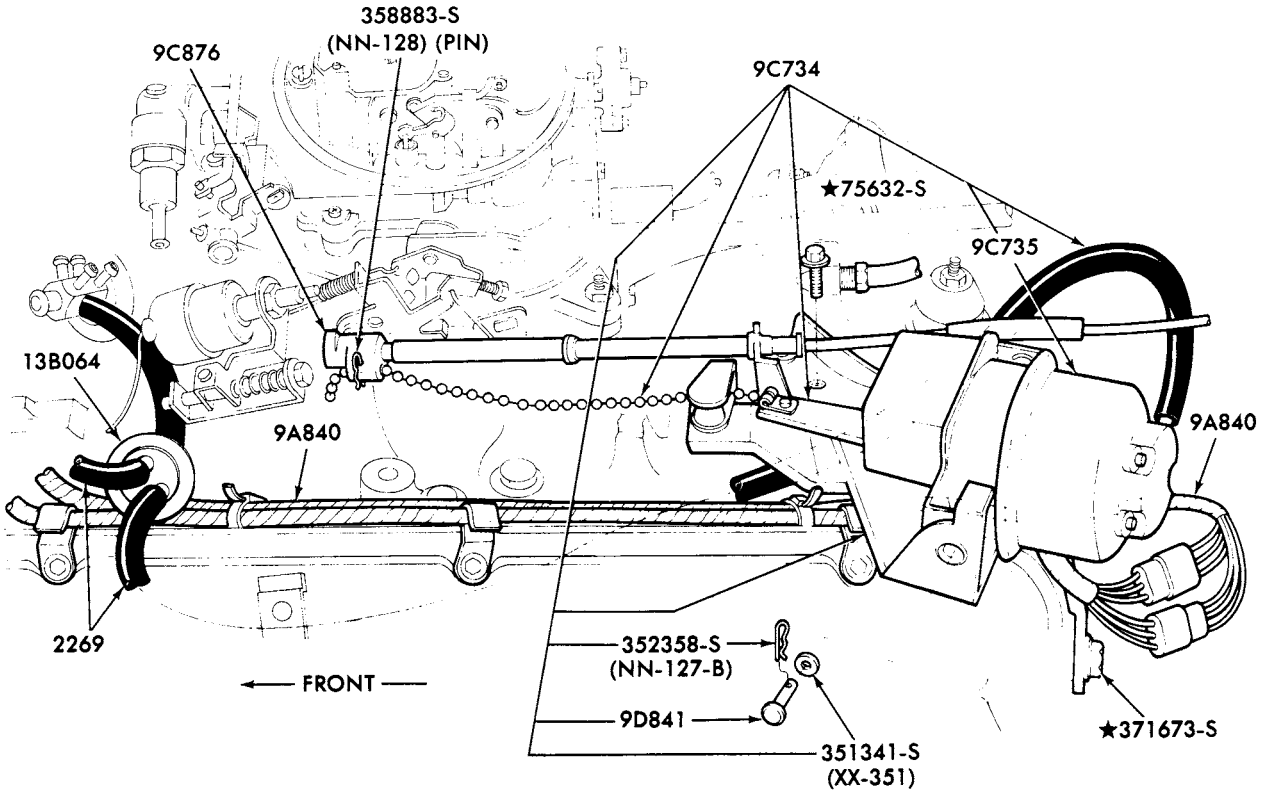

P-12344-B

SPEED CONTROL-FACTORY INSTALLED-ENGINE COMPARTMENT
1975/ E250/350--8 CYL. 460

COPYRIGHT © 1979 FORD MOTOR COMPANY - DEARBORN, MICHIGAN

1973/79 TRUCK SERIES 100/500

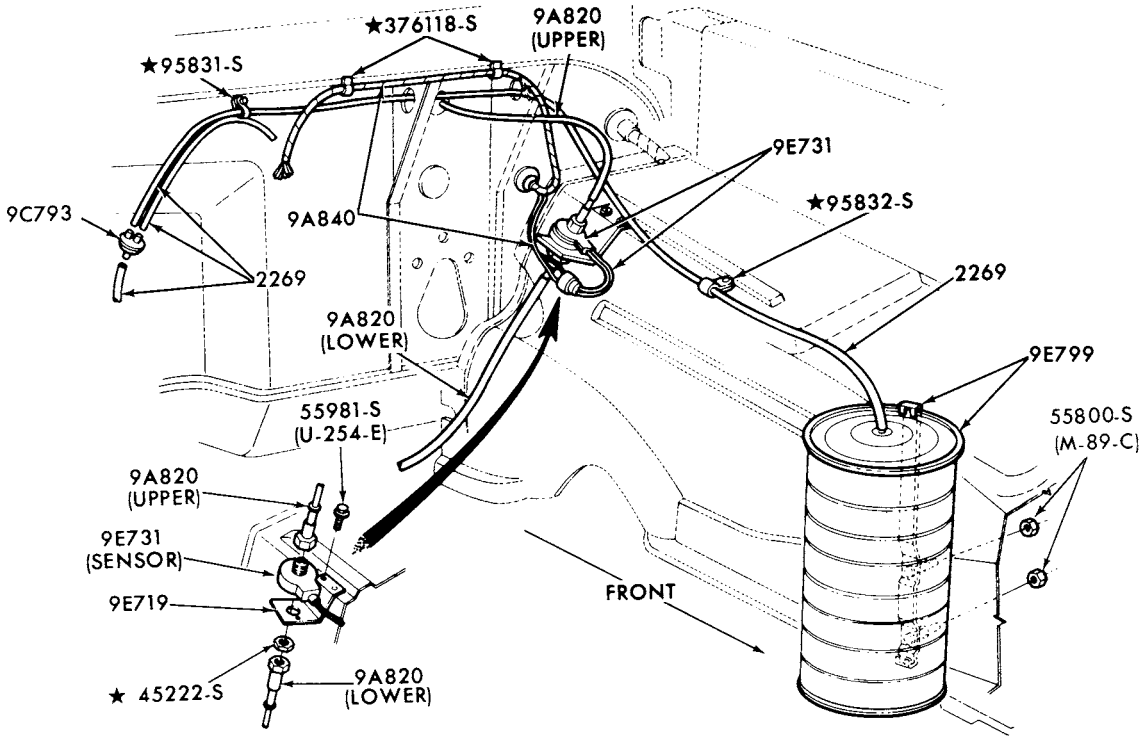

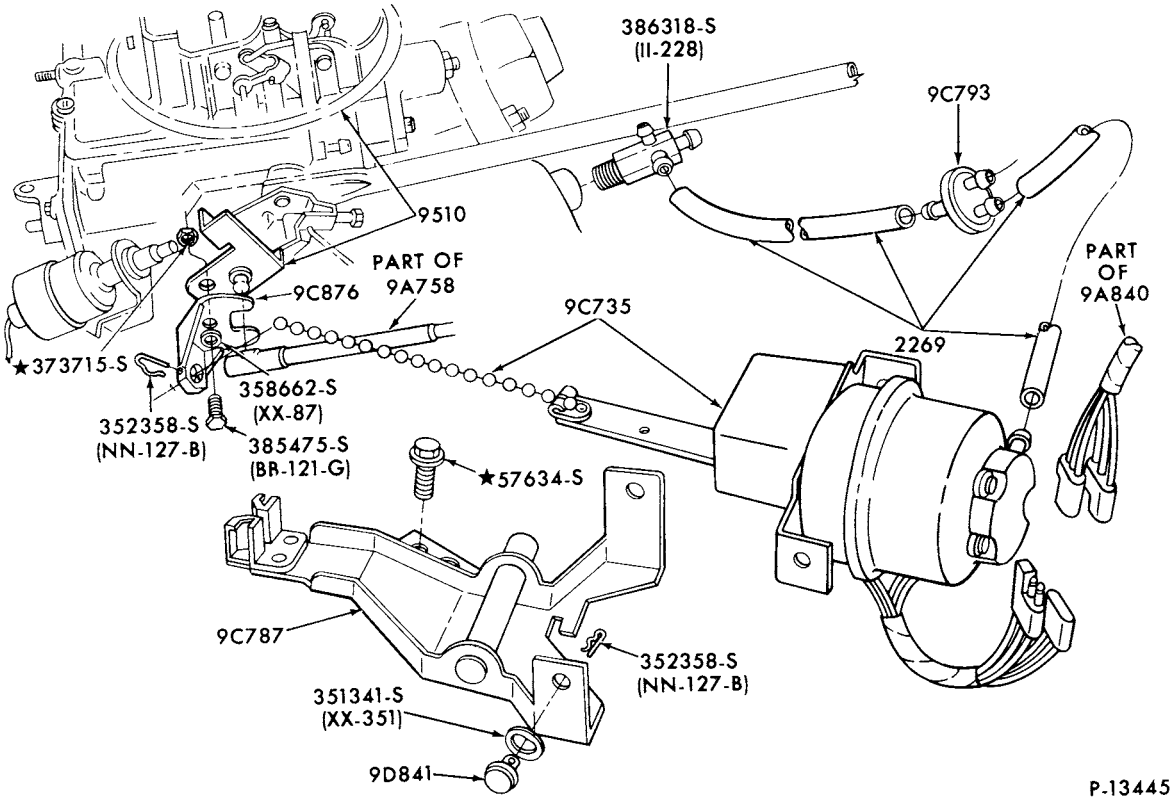

SPEED CONTROL-FACTORY INSTALLED-ENGINE COMPARTMENT
1977/ F150/350--8 CYL.351M,400

INDEX

INCLUDED IN THIS INDEX ARE THE FOLLOWING MAJOR GROUPS IN THE ORDER SHOWN BELOW

ALTERNATOR
BATTERY CARRIER
DISTRIBUTOR
EMISSION SYSTEM
GOVERNOR ASSY.
IGNITION WIRING
INSTRUMENT CLUSTER
STARTER
VOLTMETER

YEAR 19__	TITLE	SECTION	PAGE	ILLUS. NO.
	ALTERNATORS			
73/	Alternator-Ford 38, 40, 42, 55, 60 and 61 amp.	103	1	P-4508
73/	Alternator-Ford 70 amp.	103	2	P-5394
75/	Alternator-Motorcraft 90, 100 amp.	103	3	P-10328
76/	Alternator mounting brackets--F100, E100-6 cyl. 300	103	4	P-12724
76/	Alternator mounting brackets--F100-8 cyl. 302	103	4	P-12725
76/	Alternator mounting brackets--E250/350-8 cyl. 460	103	5	P-12726
76/	Alternator mounting brackets--F150/350-8 cyl. 460	103	5	P-12727
76	Alternator mounting brackets--F100/350-8 cyl. 360, 390-with T/E	103	6	P-12728
76	Alternator mounting brackets--F100/350-8 cyl. 360, 390-without T/E	103	6	P-12729

YEAR 19__	TITLE	MODEL	SECTION	PAGE	ILLUS. NO.
	BATTERY CARRIERS				
73/74	Battery carrier and related parts	E100/300	106	10	P-6723
75/	Battery carrier and related parts--6 cyl. eng.	E100/350	106	13	P-12096
75/	Battery carrier and related parts--8 cyl. eng.	E100/350	106	14	P-12097
73/	Battery carrier and related parts	F100/350	106	9	P-5307
73/77	Battery carrier and related parts-typical	B-F500	106	9	P-5786
73/77	Battery carrier and related parts	P350/500	106	10	P-11936
73/	Battery carrier and related parts (L. H. fender-mounted-auxiliary battery)	F100/350--w/dual battery	106	12	P-10751
73/76	Battery carrier and related parts	M450/500	106	12	P-11421

YEAR 19__	TITLE	SECTION	PAGE	ILLUS. NO.
	DISTRIBUTORS			
73/	Distributor (conventional)--6 cyl. eng.	120	1	P-10451
73/	Distributor (conventional)--8 cyl. eng.	120	2	P-9288
74/	Distributor (breakerless)--8 cyl. eng.	120	3	P-11057
74	Distributor (breakerless)--6 cyl. eng.	120	3	P-11057
75/	Distributor (breakerless)--6 cyl. eng.	120	4	P-12857
	DISTRIBUTOR VACUUM HOSES			
78/	Distributor vacuum hoses--F150-8 cyl. 302-exc. Calif.	120.2	1	P-14306
	EMISSION SYSTEM			
	Emission system - exhaust gas recirculation (E.G.R.) --Refer to emissions in Illustration Index 90 Section 94.1			

COPYRIGHT © 1979 FORD MOTOR COMPANY —DEARBORN, MICHIGAN

INDEX

YEAR 19__	TITLE	SECTION	PAGE	ILLUS. NO.
	IGNITION WIRING			
73/77	Ignition wiring (conventional distributor) system-typical--B-E-F-P100/500-6 cyl. 240 and 300	120.1	2	P-8239
73/	Ignition wiring (conventional distributor system-typical--E-F100/350-6 cyl. 240 and 300	120.1	2	P-8239
73/74	Ignition wiring (conventional distributor) system-typical--E100/300 and F100-8 cyl. 302	120.1	3	P-8240
73/74	Ignition wiring (conventional distributor) system-typical--F100/350-8 cyl. 360 and 390	120.1	4	P-8244
73/74	Ignition wiring (conventional distributor) system-typical--B-F500-8 cyl. 330 M/D	120.1	5	P-8241
74/	Ignition wiring (breakerless distributor) system-typical--B- F500,P350/500-6 cyl.300	120.1	6	P-11780
74/	Ignition wiring (breakerless distributor) system-typical--F100-8 cyl. 302	120.1	7	P-11781
74/75	Ignition wiring (breakerless distributor) system-typical--F100/350-8 cyl. 360 and 390	120.1	8	P-11782
74/	Ignition wiring (breakerless distributor) system-typical--F100/350-8 cyl. 460	120.1	9	P-11783
	GOVERNOR ASSEMBLY			
73/	Governor assy.-velocity type-typical--6 cyl. 300	120.1	1	P-6700
	INSTRUMENT CLUSTERS			
73/74	Instrument cluster and related parts--E100/300	106	1	P-8999
75/	Instrument cluster and related parts--E100/350-w/gauges	106	7	P-11626
75/	Instrument cluster and related parts--E100/350-w/warning lights	106	8	P-11627
73/	Instrument cluster and related parts--F100/350(81)-w/warning lights	106	2	P-10168
73/	Instrument cluster and related parts--F100/350(81)-w/gauges	106	3	P-10167
73/	Instrument cluster and related parts--F350	106	4	P-8967
73/77	Instrument cluster and related parts--B-F500	106	4	P-8967
73/77	Instrument cluster and related parts--F500 (81)	106	5	P-7136
73/77	Instrument cluster and related parts--P350/500	106	6	P-3557
	STARTERS			
	Starter and drive assy.-Ford positive engagement			
73/77	- w/o integral solenoid w/side cable attachment	110	1	P-3191
73/77	- w/integral solenoid w/side cable attachment	110	2	P-5952
77/	- w/o integral solenoid w/rear cable attachment	110	3	P-13469
	VOLTMETER			
73/77	B500	106	11	P-10251

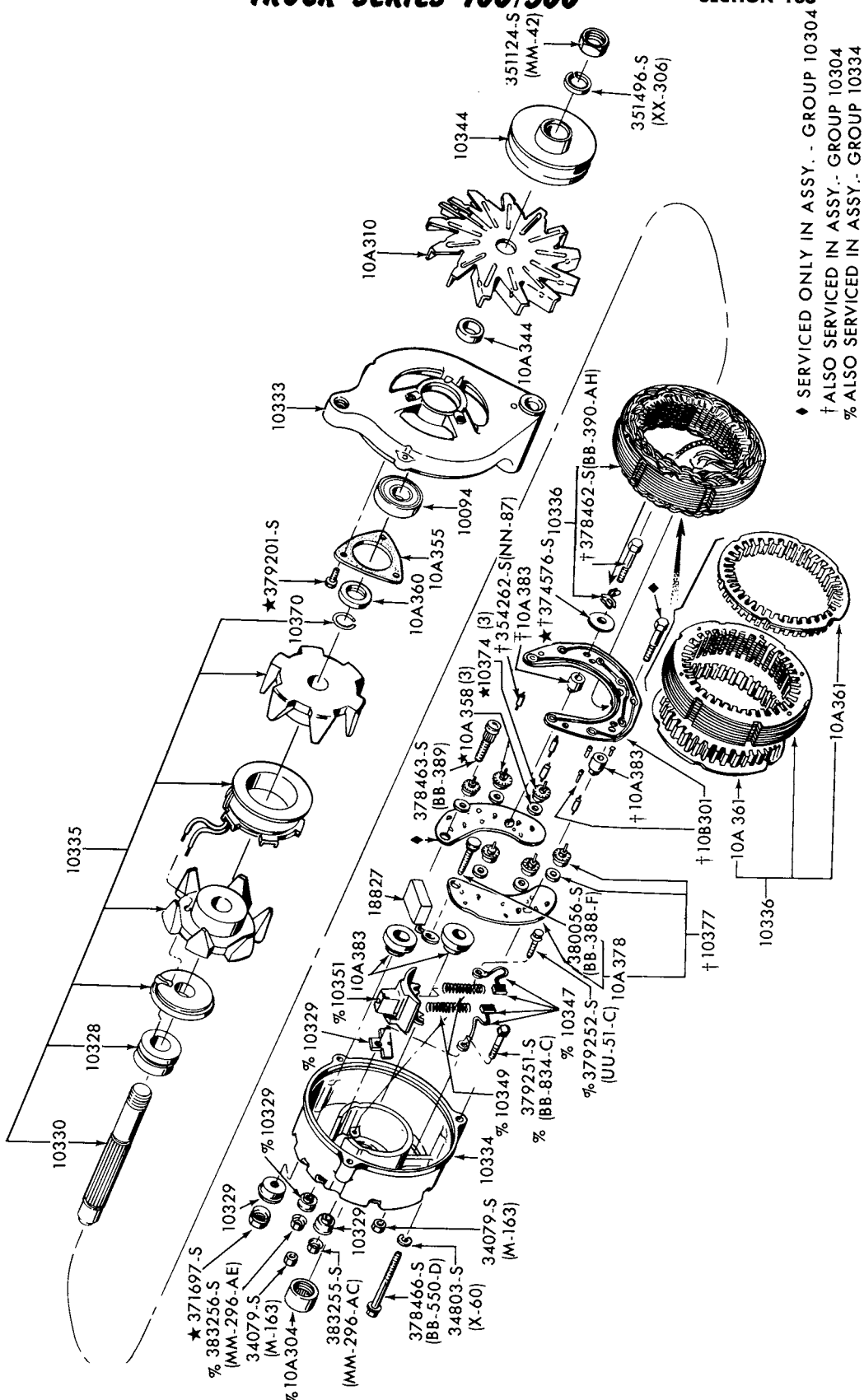

ALTERNATOR-FORD 38, 40, 42, 55, 60 and 61 AMP.
1973/

COPYRIGHT © 1979 -FORD MOTOR COMPANY DEARBORN, MICHIGAN

1973/79 TRUCK SERIES 100/500

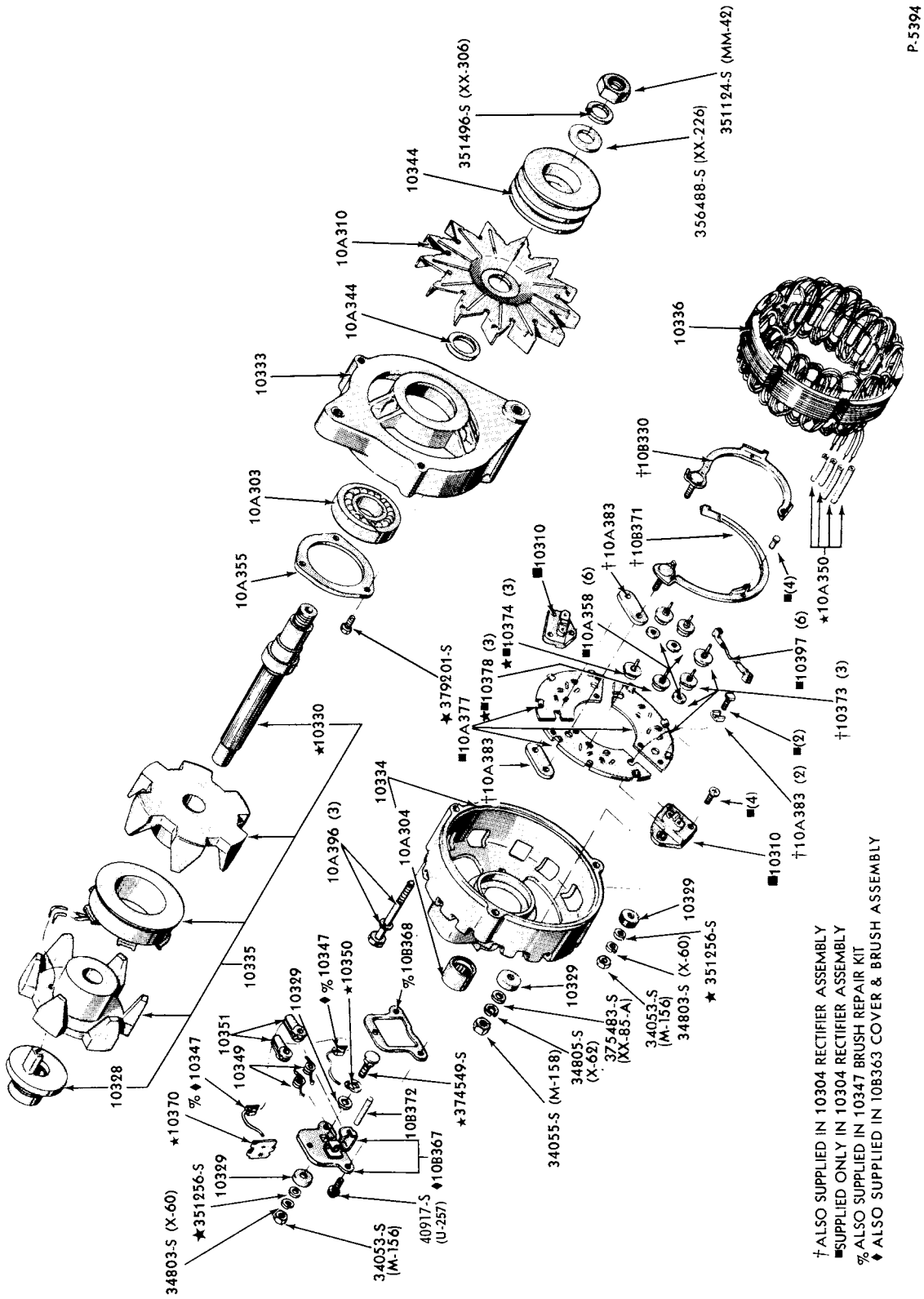

ALTERNATOR-FORD 70 AMP.
1973/

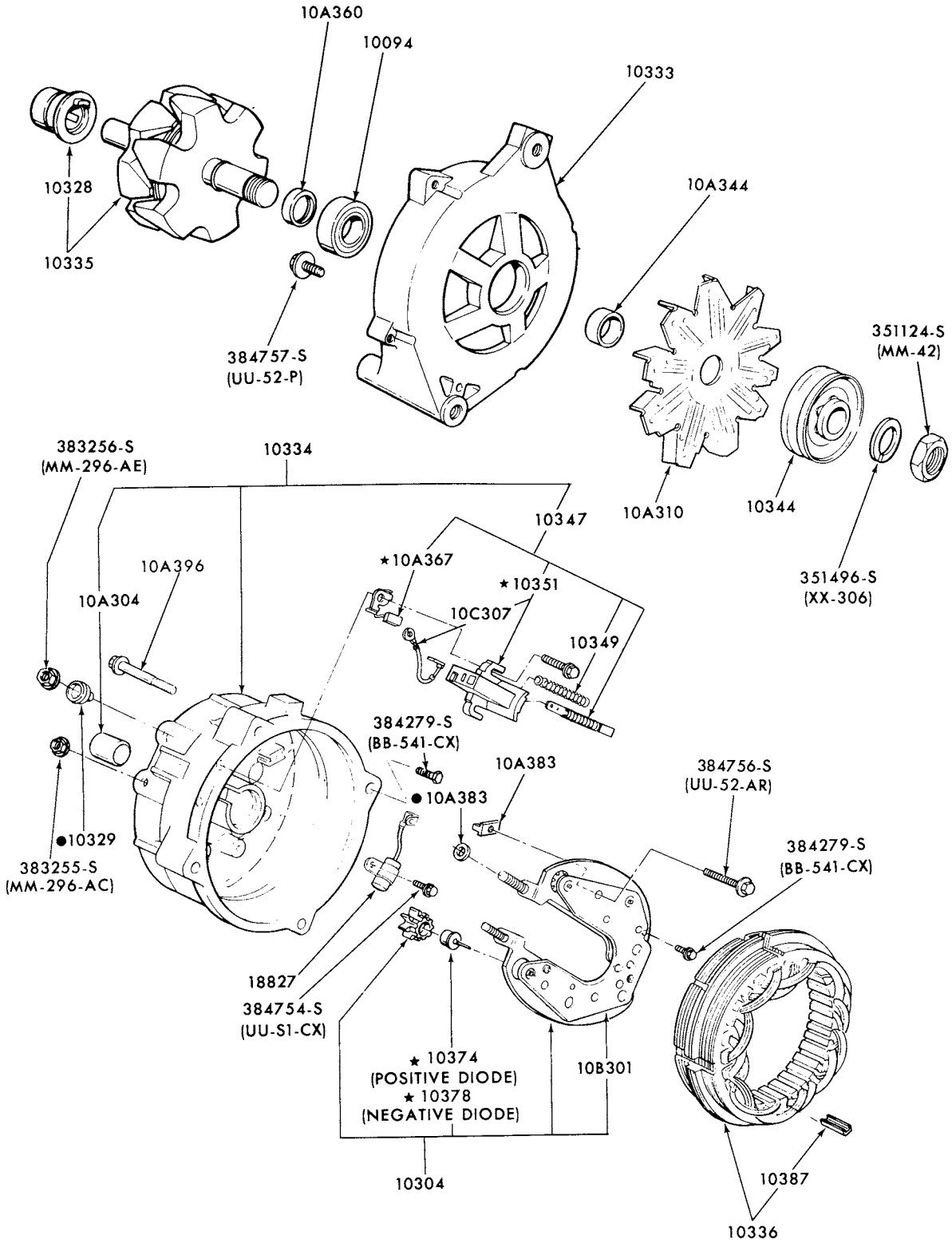

●ALSO PART OF 10A383 KIT

P-10328

ALTERNATOR - MOTORCRAFT 90 and 100 AMP.
1975/

COPYRIGHT © 1979 - FORD MOTOR - DEARBORN, MICHIGAN
COMPANY

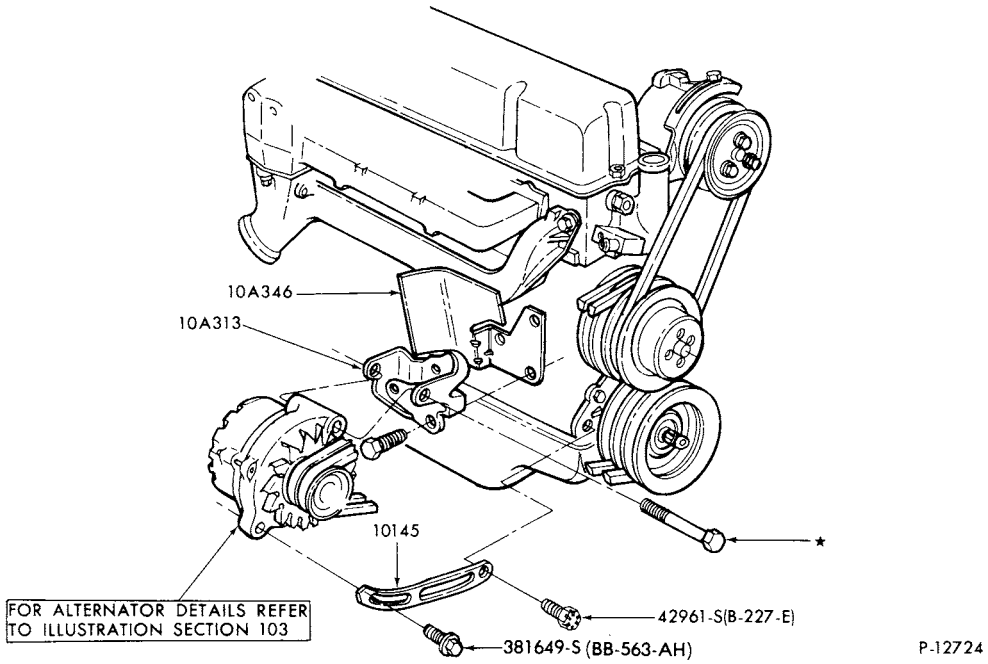

ALTERNATOR MOUNTING BRACKETS
1976/ F100 and E100--6 CYL. 300

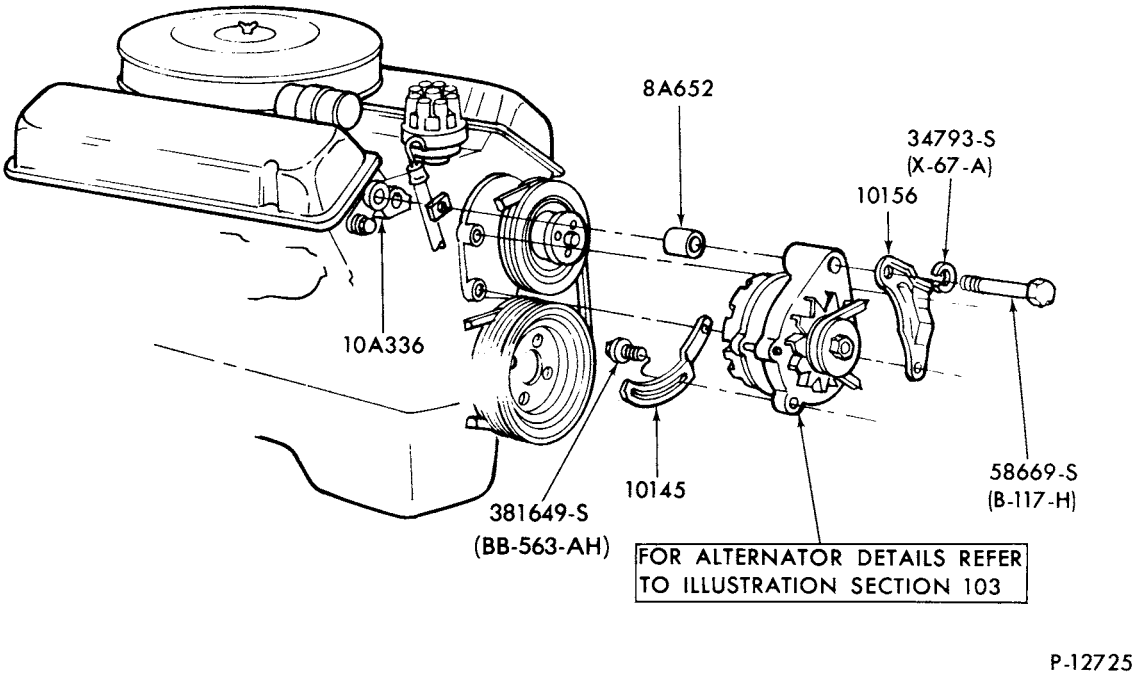

ALTERNATOR MOUNTING BRACKETS
1976/ F100--8 CYL. 302

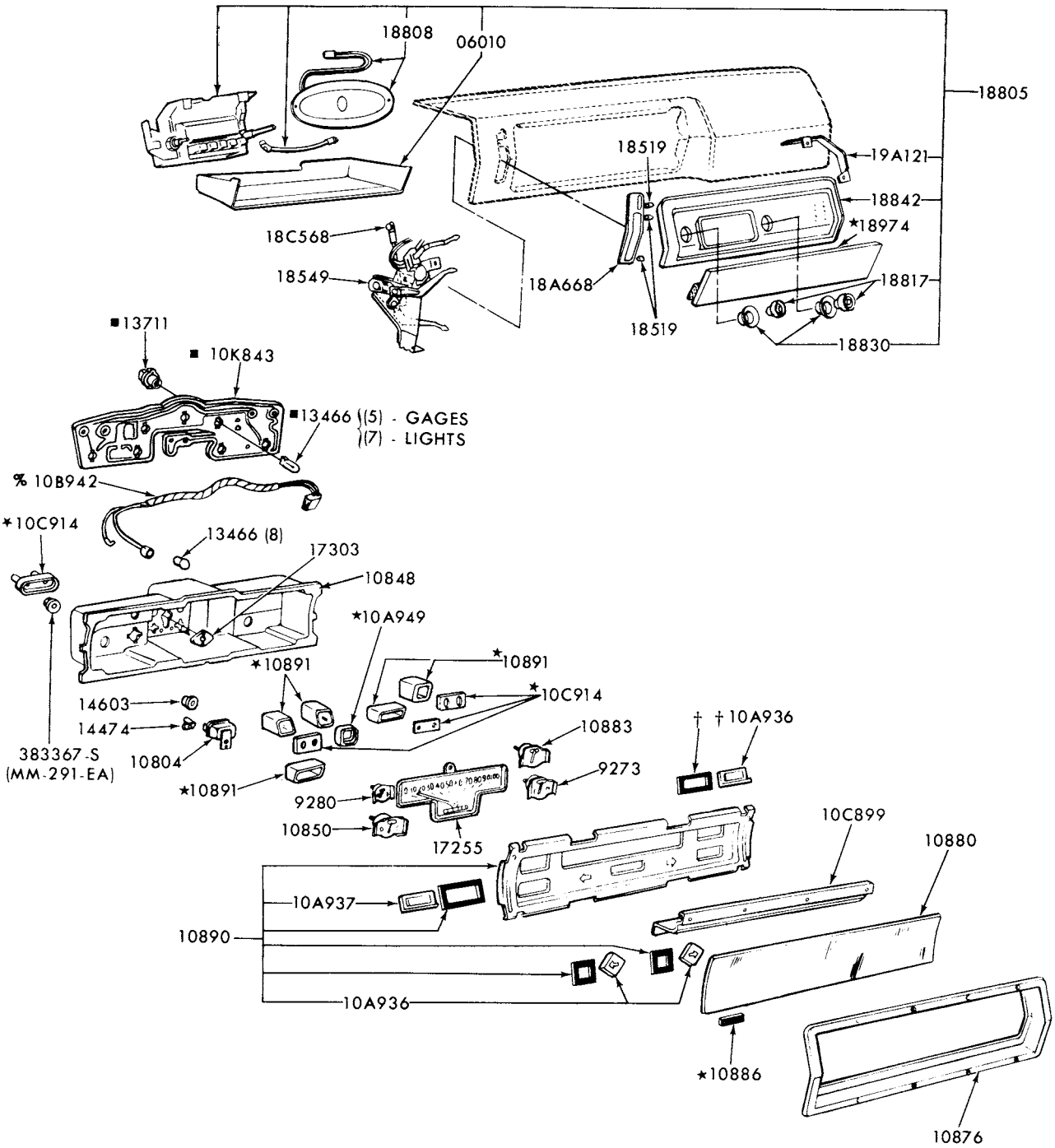

† ALSO SUPPLIED IN 10890 MASK ASSEMBLY
■ 1970/
% 1969

P-8999

INSTRUMENT CLUSTER and RELATED PARTS
1973/74 E100/300

COPYRIGHT © 1979 FORD MOTOR COMPANY, DEARBORN, MICHIGAN

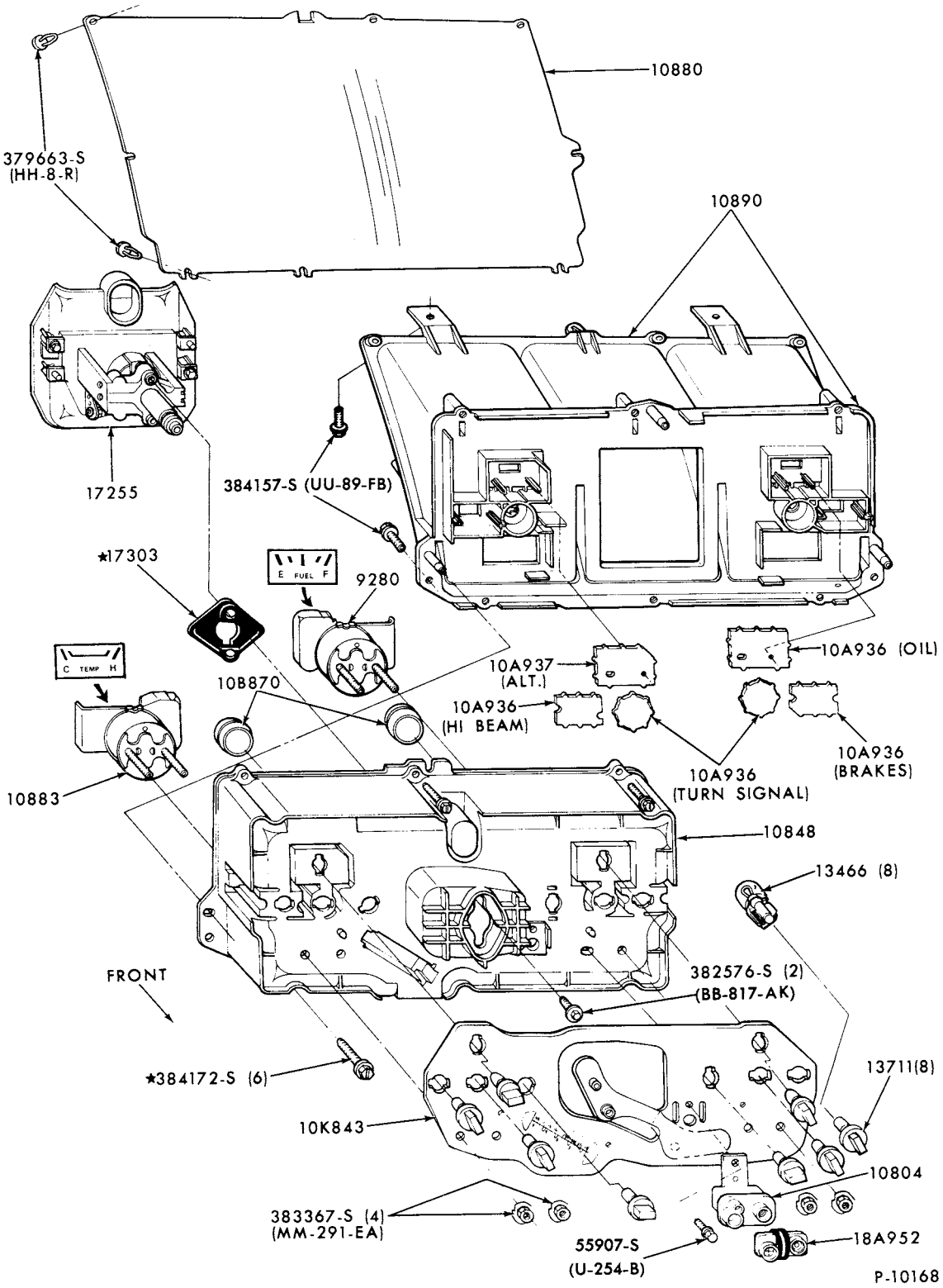

INSTRUMENT CLUSTER and RELATED PARTS
1973/ F100/350 (81)--w/WARNING LIGHTS

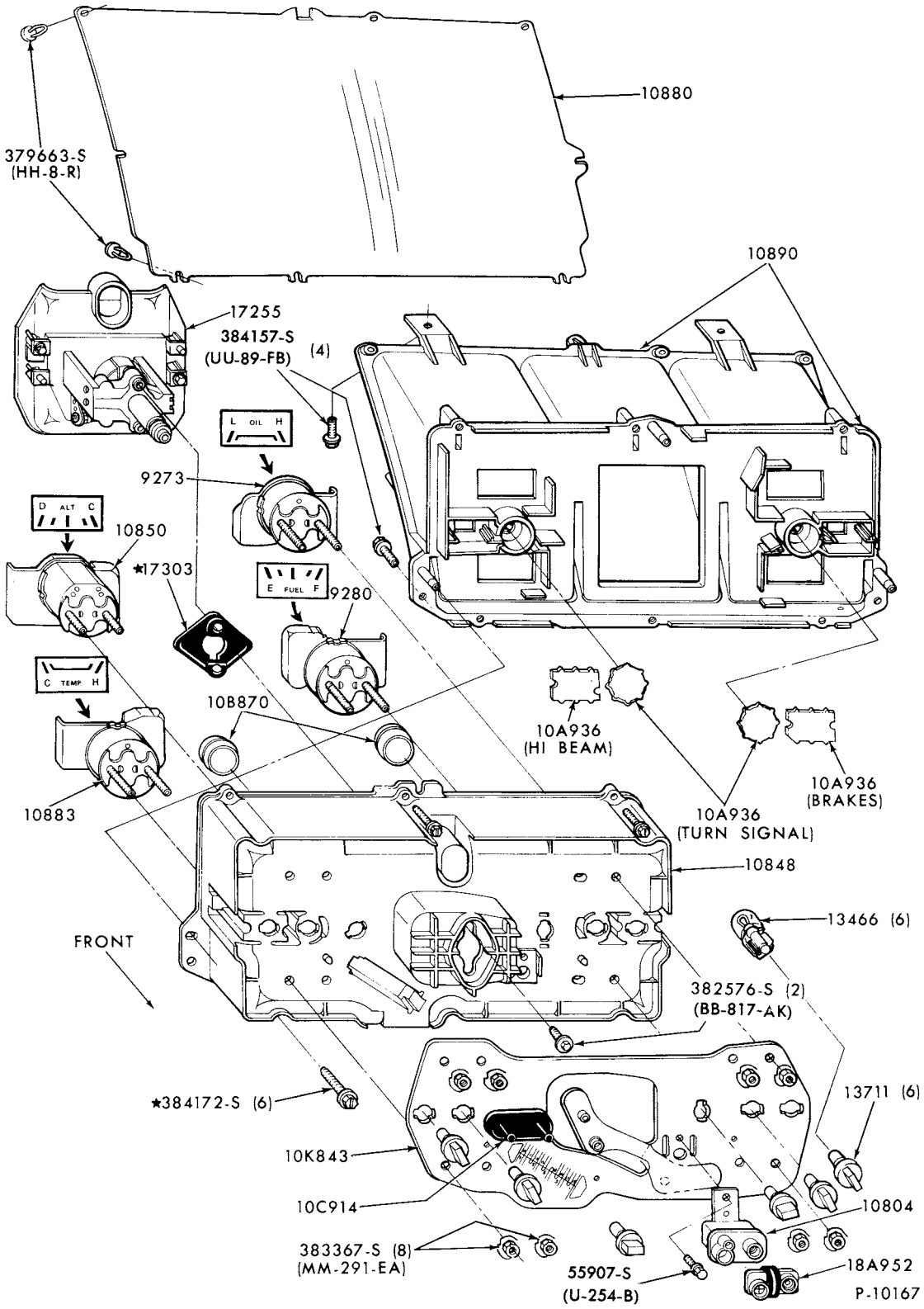

INSTRUMENT CLUSTER and RELATED PARTS
1973/ F100/350 (81)--w/GAUGES

COPYRIGHT © 1979 FORD MOTOR COMPANY - DEARBORN, MICHIGAN

1973/79 TRUCK SERIES 100/500

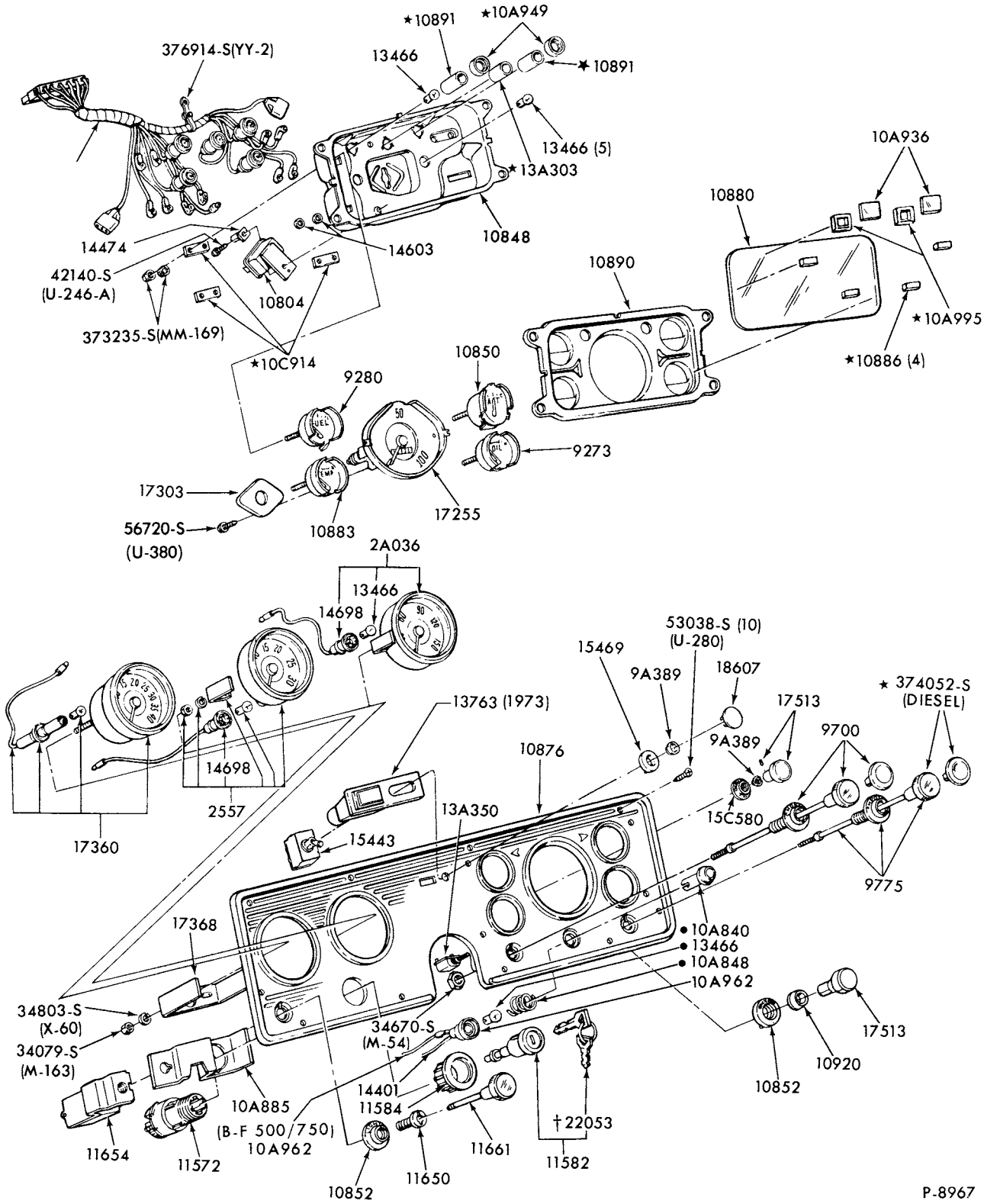

† REFER TO BODY SECTION
• ALSO INCLUDED IN 10A962 (B-F 500)

INSTRUMENT CLUSTER and RELATED PARTS
1973/ F350 and 1973/77 B-F500 (84)

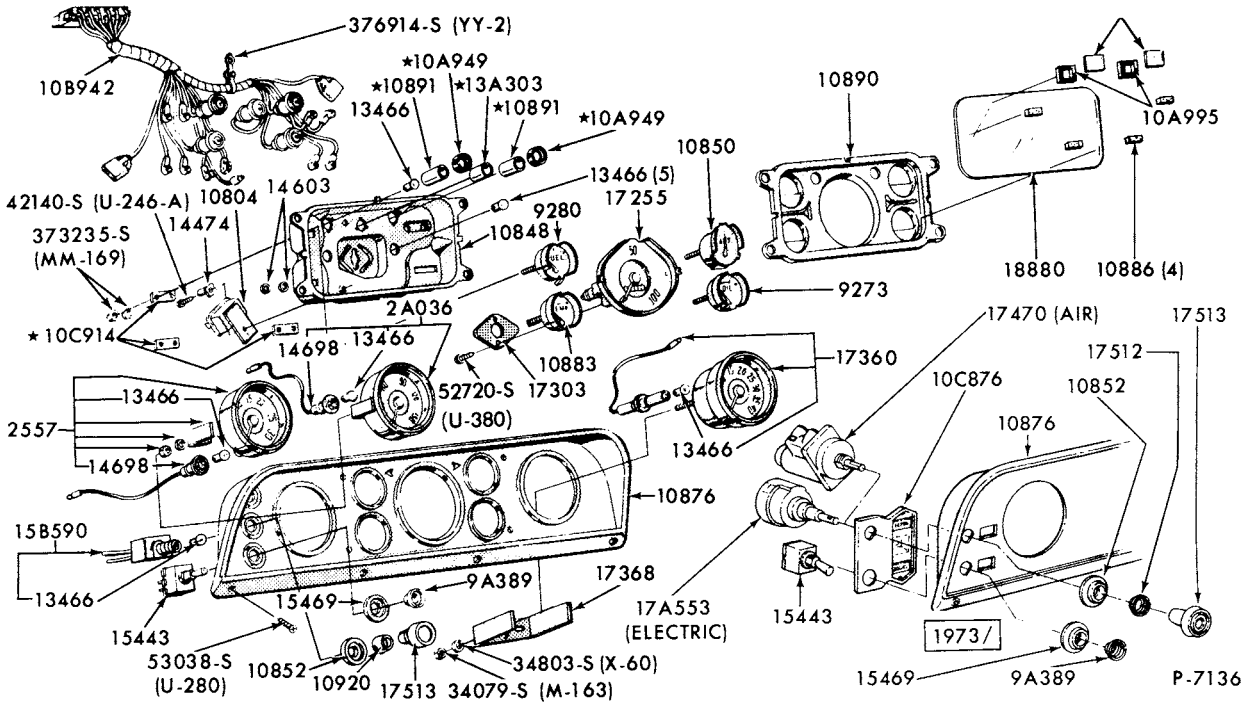

INSTRUMENT CLUSTER and RELATED PARTS-TYPICAL
1973/77 F500 (81)

COPYRIGHT © 1980— FORD MOTOR COMPANY —DEARBORN, MICHIGAN

1973/79 TRUCK SERIES 100/500

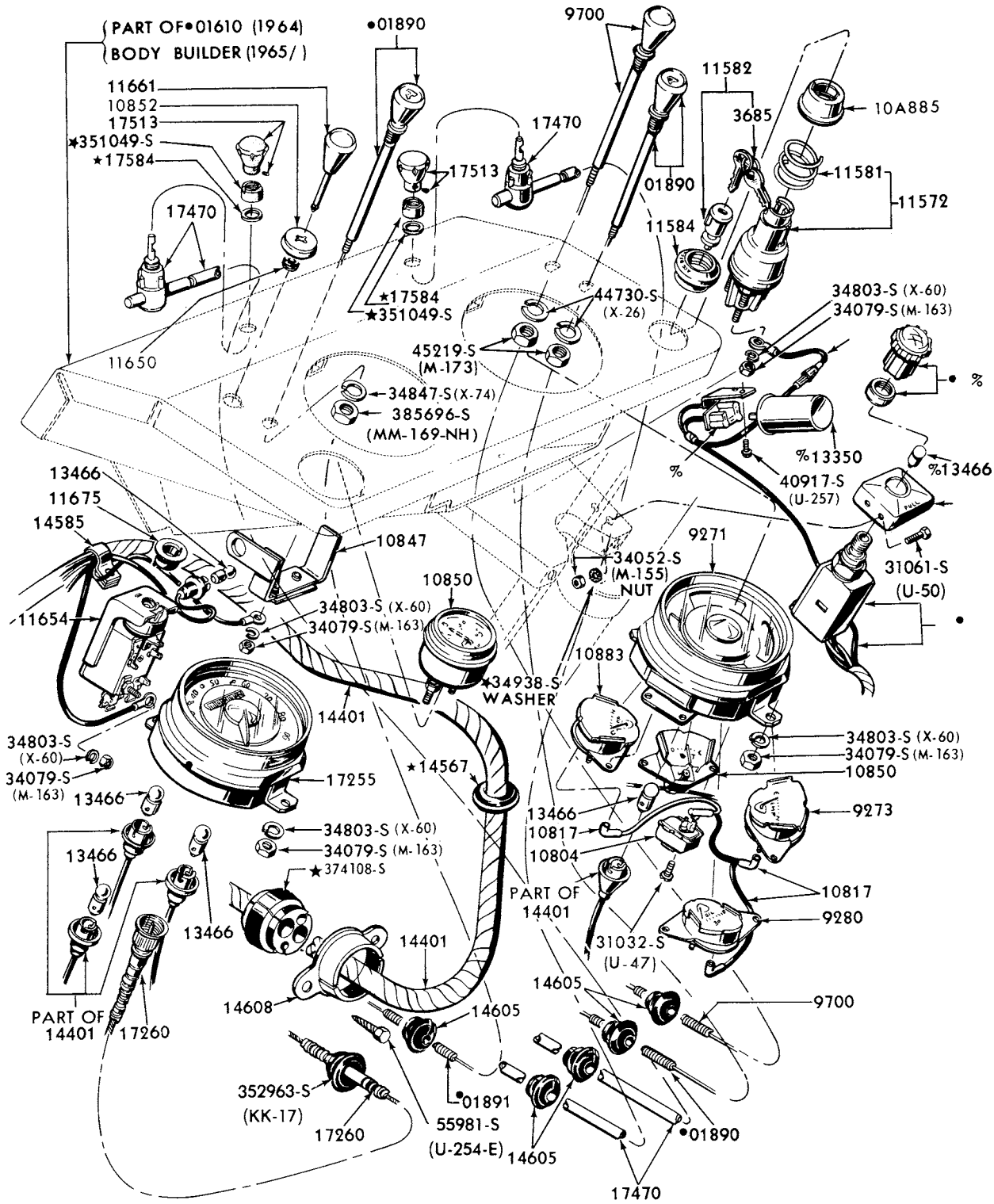

% SUPPLIED IN 15583 FLASHER ASSEMBLY
•-REFER TO BODY SECTION

P-3557

INSTRUMENT CLUSTER and RELATED PARTS
1973/77 P350/500

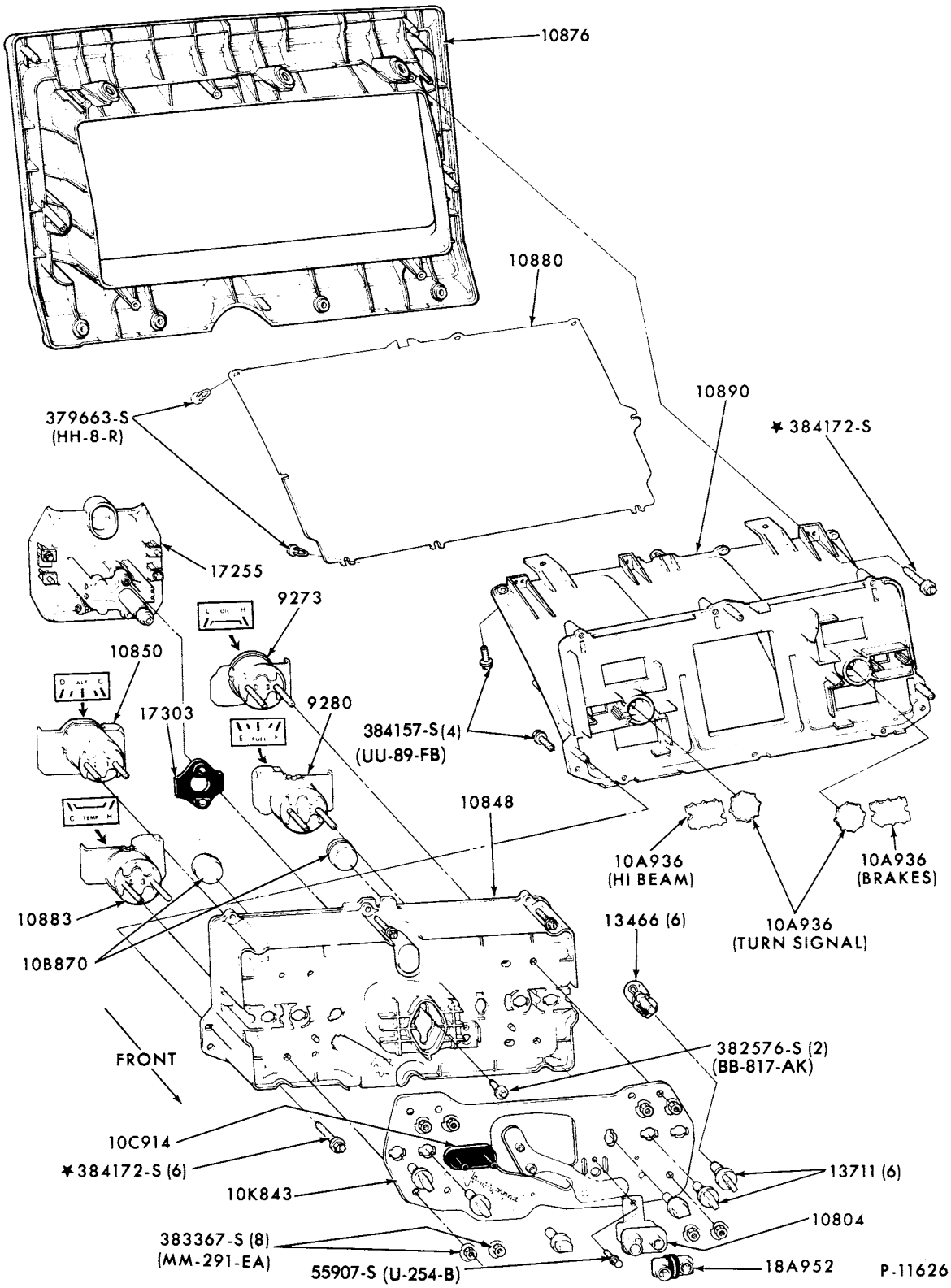

INSTRUMENT CLUSTER and RELATED PARTS
1975/ E100/350--w/GAUGES

COPYRIGHT © 1979 FORD MOTOR COMPANY, DEARBORN, MICHIGAN

1973/79 TRUCK SERIES 100/500

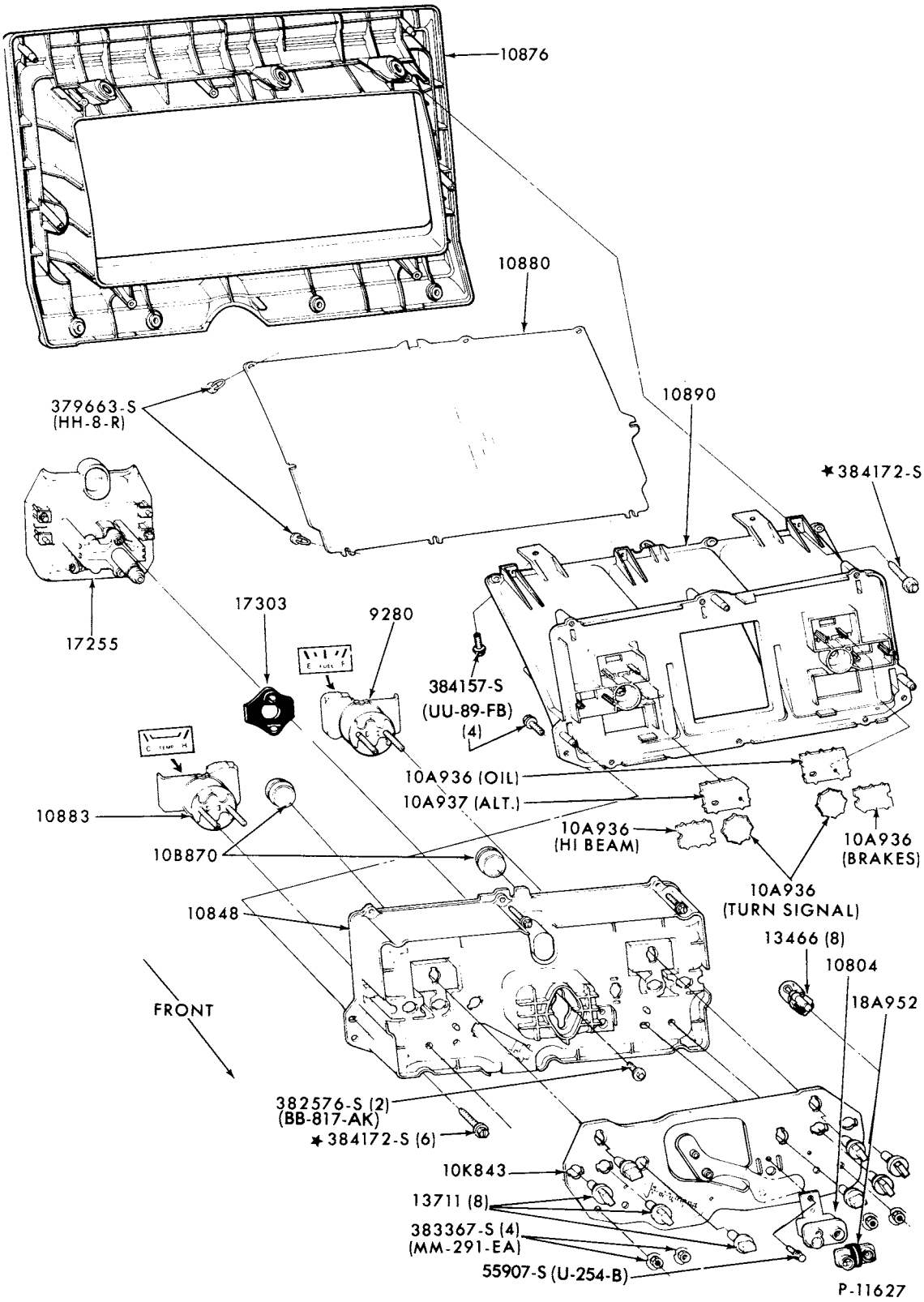

INSTRUMENT CLUSTER and RELATED PARTS
1975/ E100/350--w/WARNING LIGHTS

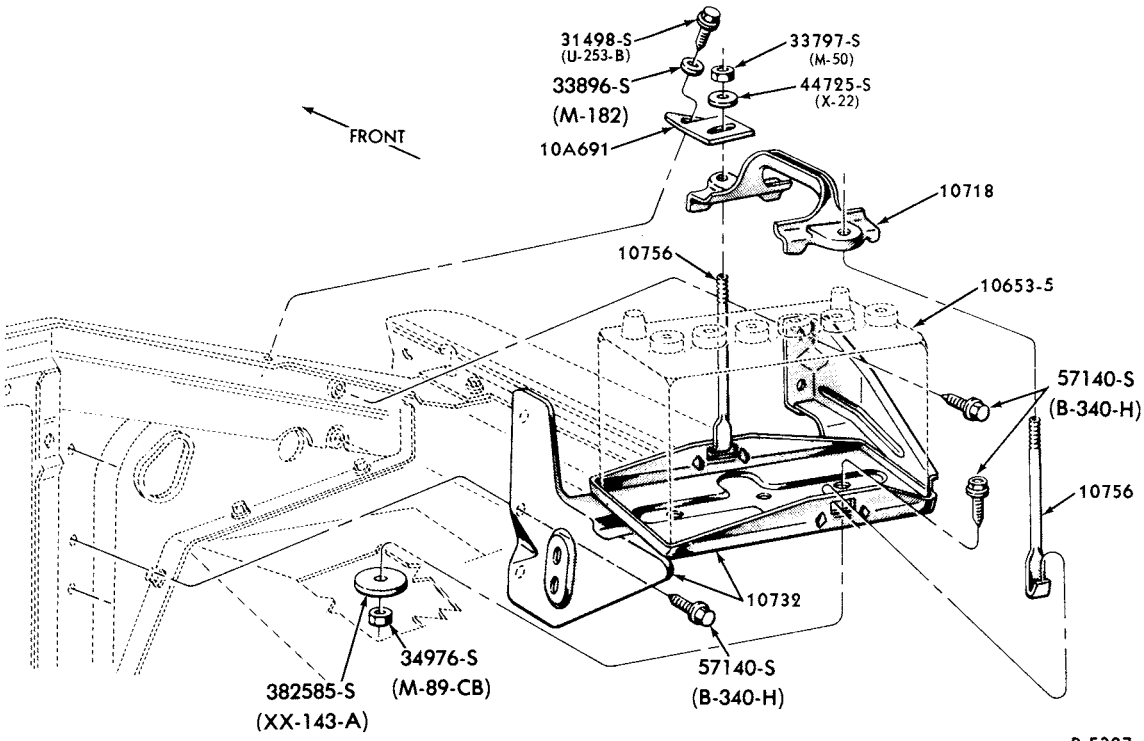

BATTERY CARRIER and RELATED PARTS
1973/ F100/350

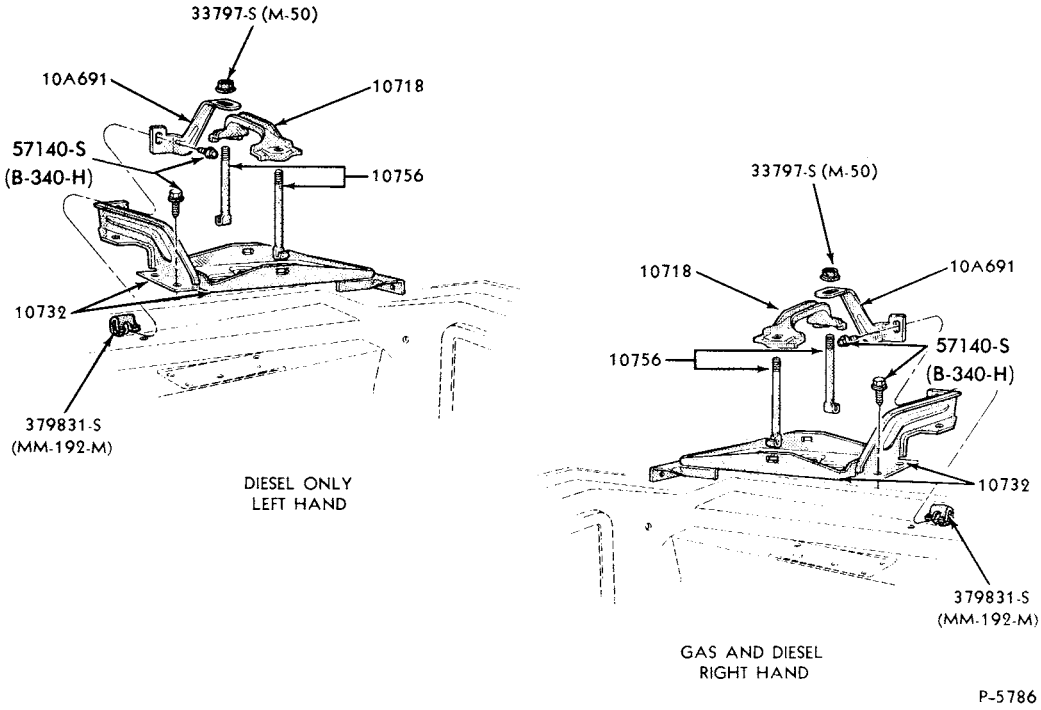

BATTERY CARRIER and RELATED PARTS-TYPICAL
1973/77 B-F500

COPYRIGHT © 1979 FORD MOTOR COMPANY - DEARBORN, MICHIGAN

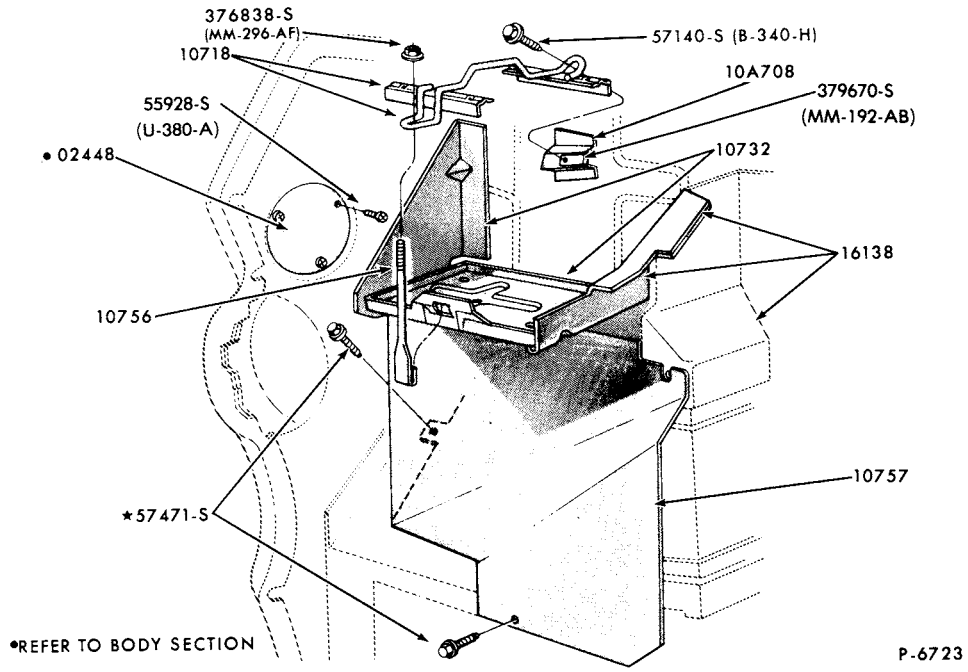

BATTERY CARRIER and RELATED PARTS
1973/74 E100/300

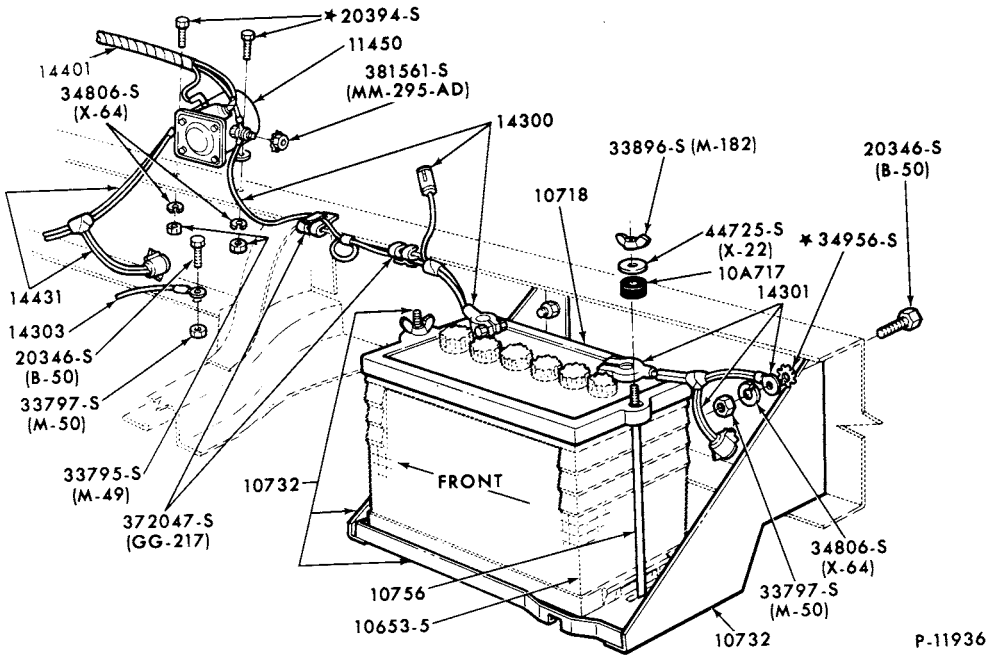

BATTERY CARRIER and RELATED PARTS-TYPICAL
1973/77 P350/500

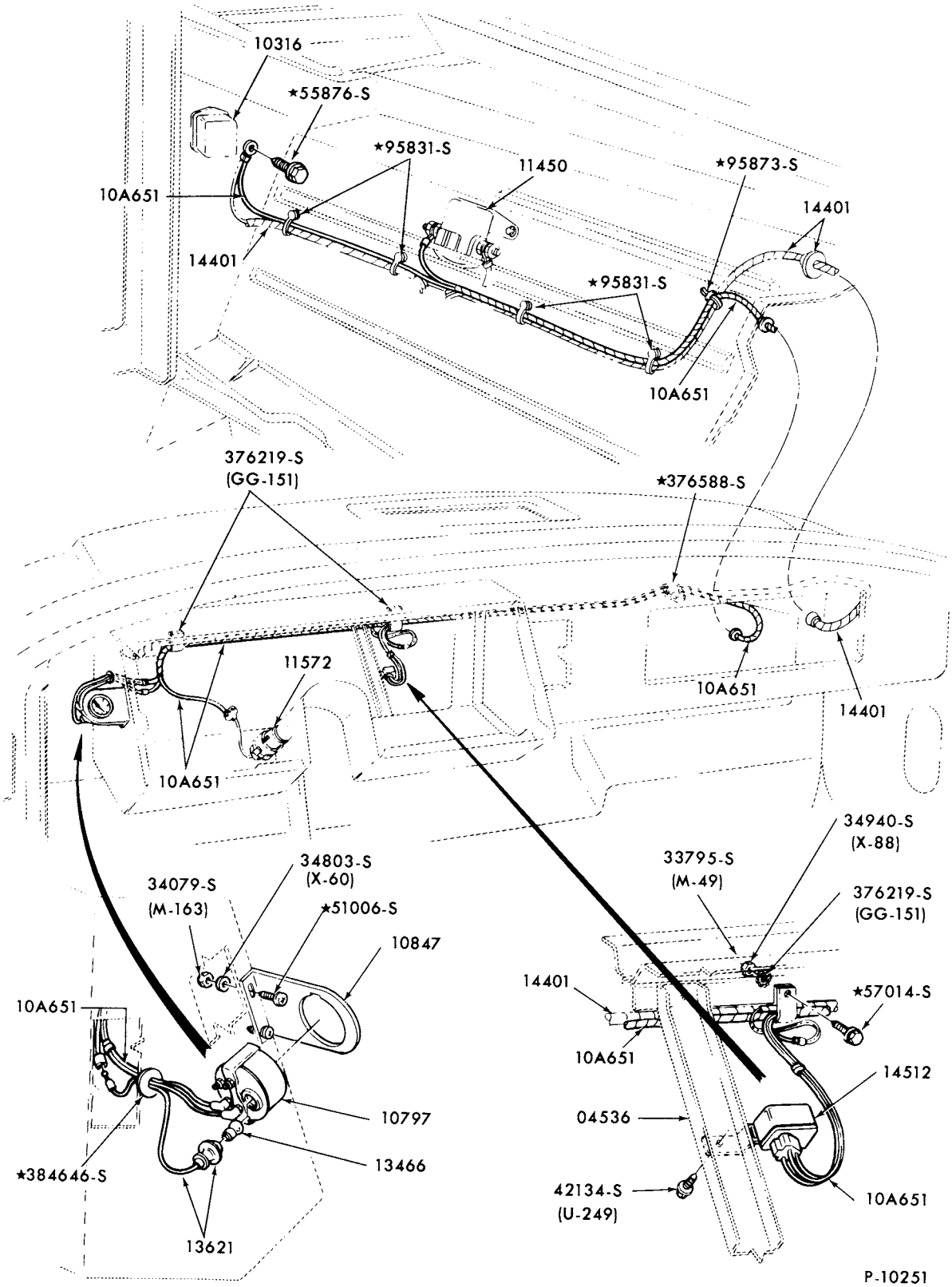

VOLTMETER and RELATED PARTS
1973/77 B500

COPYRIGHT © 1979 FORD MOTOR COMPANY - DEARBORN, MICHIGAN

1973/79 TRUCK SERIES 100/500

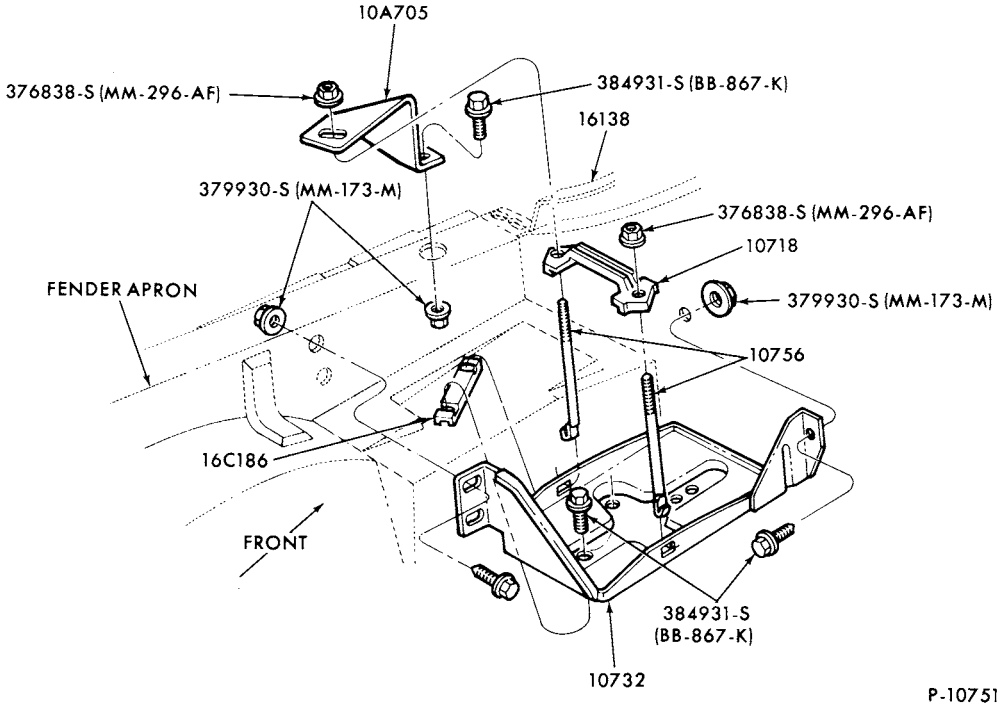

BATTERY CARRIER and RELATED PARTS
L.H. FENDER MOUNTED AUXILIARY BATTERY
1973/ F100/350--w/DUAL BATTERY

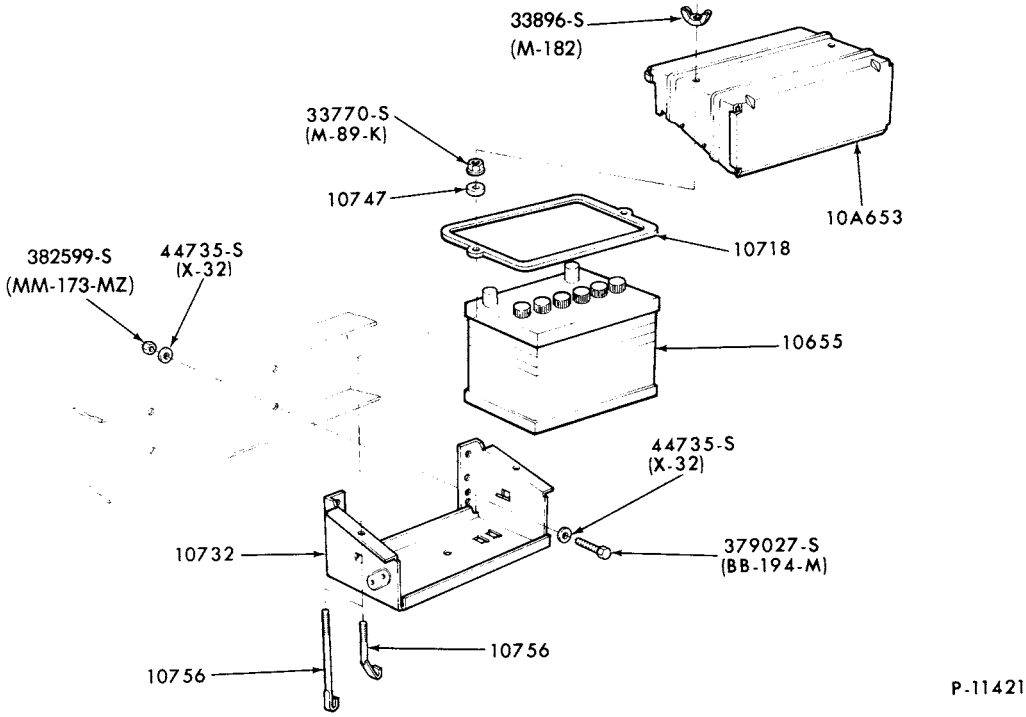

BATTERY CARRIER and RELATED PARTS-TYPICAL
1973/76 M450/500

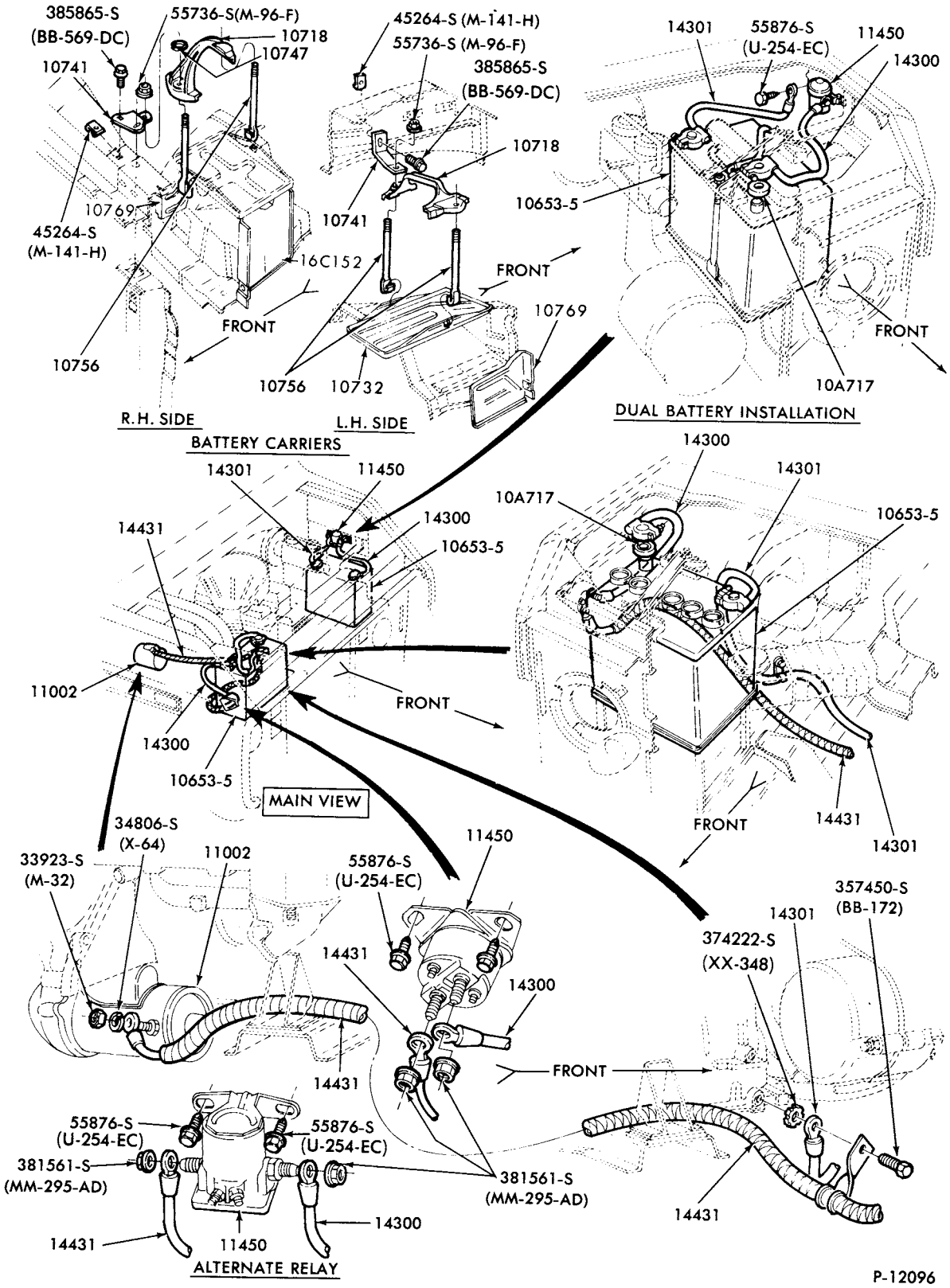

BATTERY CARRIER and RELATED PARTS
1975/ E100/350--6 CYL.

COPYRIGHT © 1979 FORD MOTOR COMPANY - DEARBORN, MICHIGAN

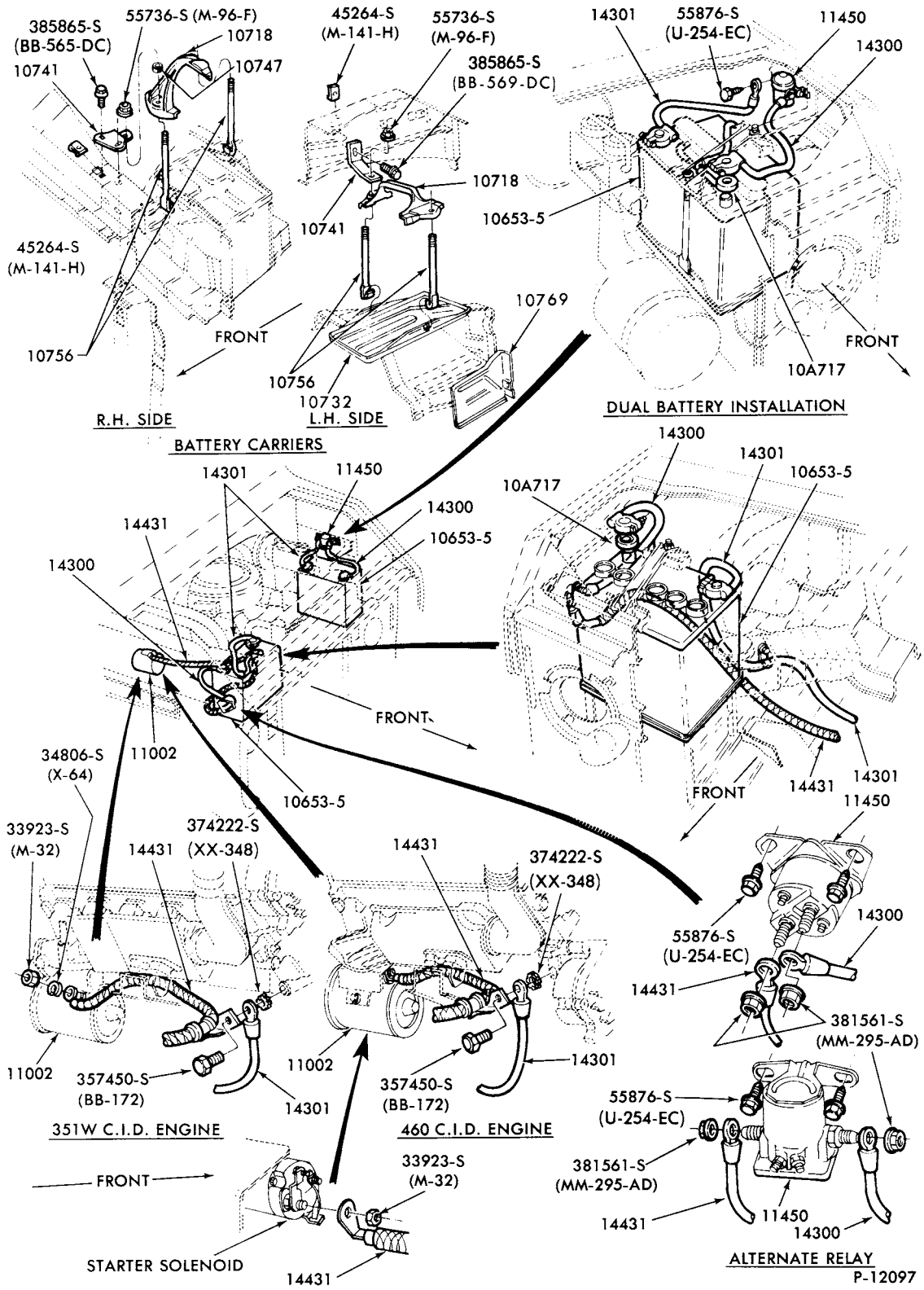

BATTERY CARRIER and RELATED PARTS
1975/ E100/350--8 CYL.

P-3191

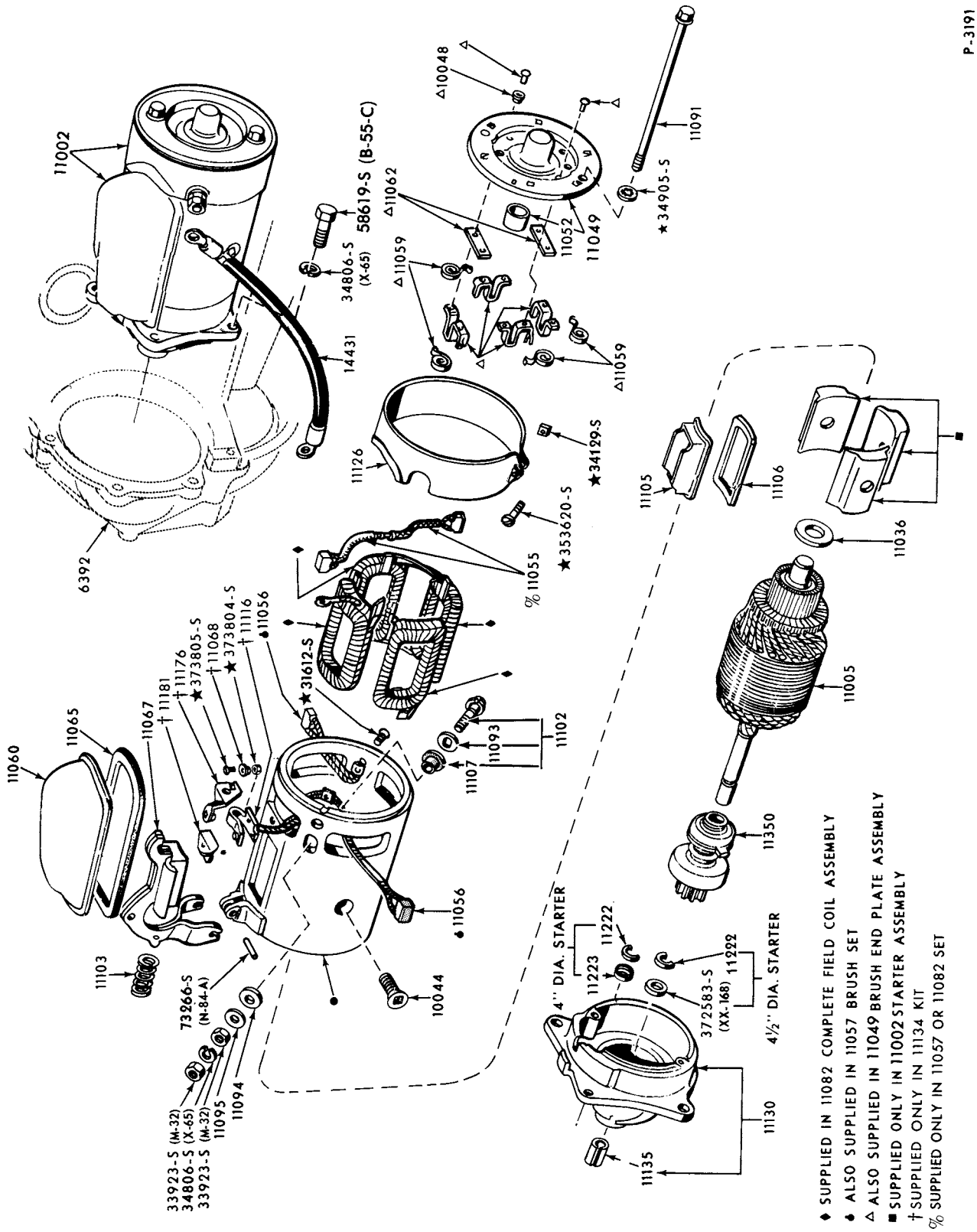

♦ SUPPLIED IN 11082 COMPLETE FIELD COIL ASSEMBLY
♦ ALSO SUPPLIED IN 11057 BRUSH SET
Δ ALSO SUPPLIED IN 11049 BRUSH END PLATE ASSEMBLY
■ SUPPLIED ONLY IN 11002 STARTER ASSEMBLY
† SUPPLIED ONLY IN 11134 KIT
% SUPPLIED ONLY IN 11057 OR 11082 SET

STARTER and DRIVE ASSY.- FORD POSITIVE ENGAGEMENT WITHOUT INTEGRAL SOLENOID
1973/77 A11-WITH SIDE CABLE ATTACHMENT

COPYRIGHT © 1979 – FORD MOTOR–DEARBORN, MICHIGAN COMPANY

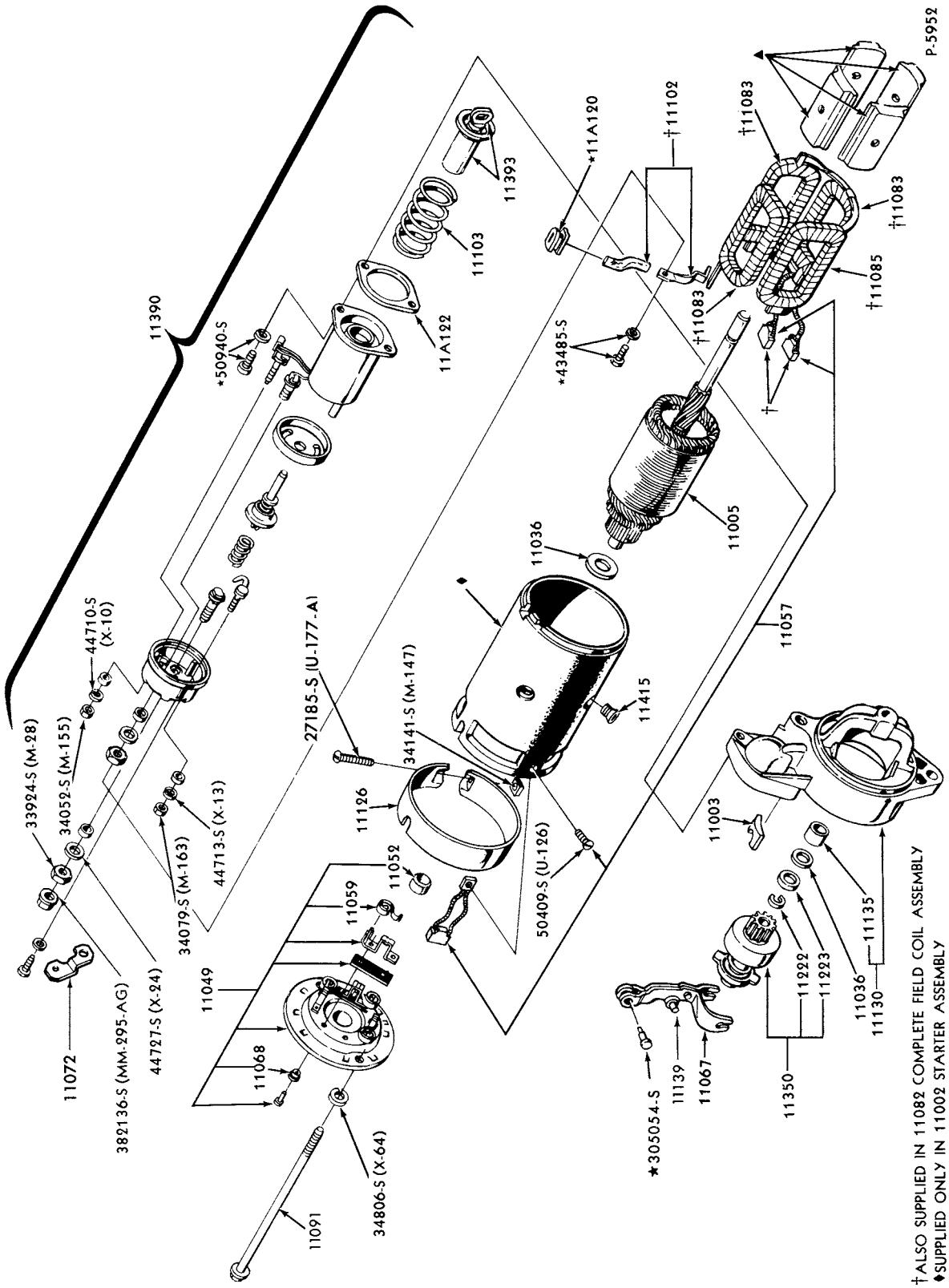

STARTER and DRIVE ASSY.-FORD POSITIVE ENGAGEMENT WITH INTEGRAL SOLENOID
1973/77 ALL-WITH SIDE CABLE ATTACHMENT

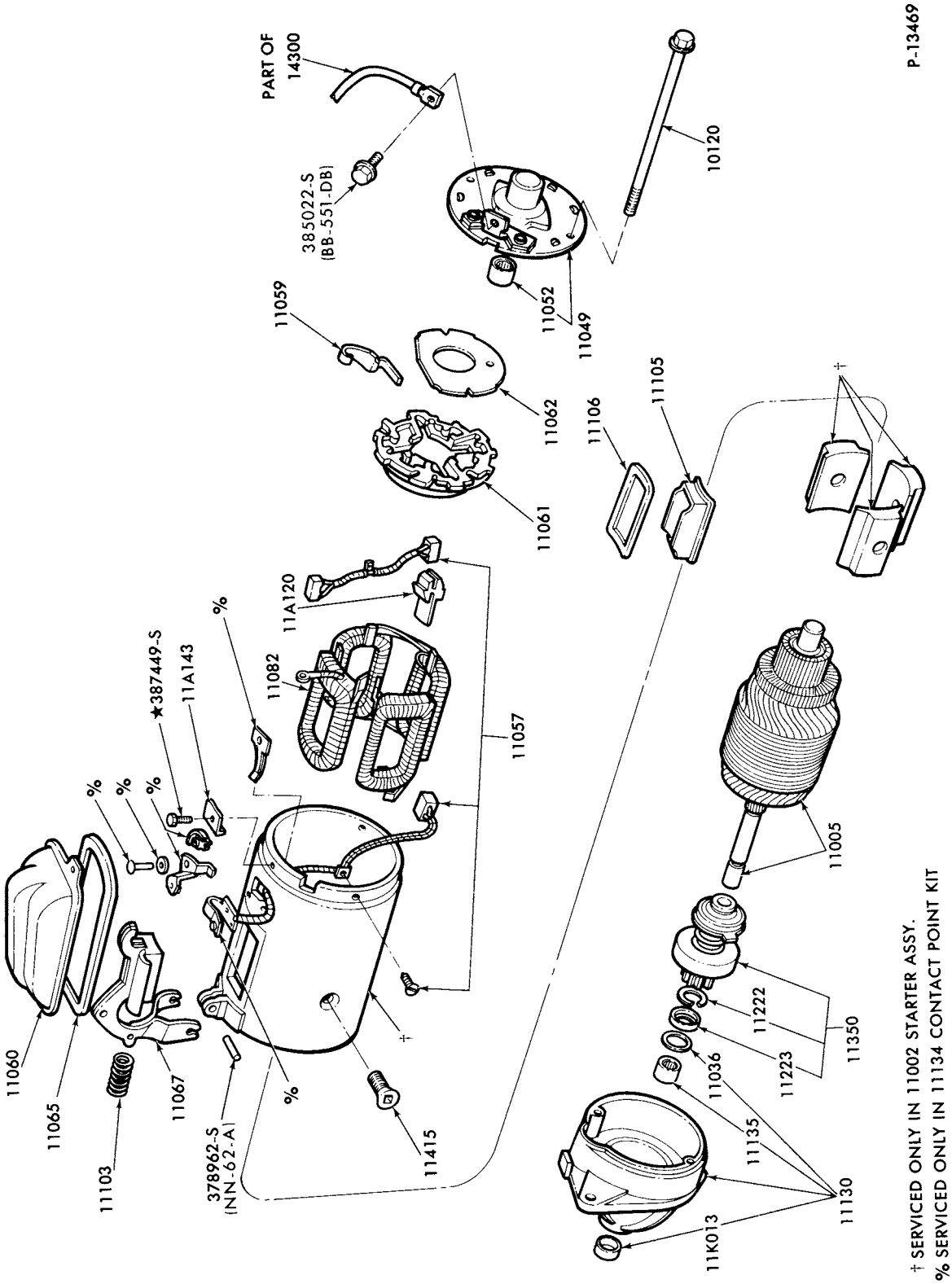

STARTER and DRIVE ASSY. - FORD POSITIVE ENGAGEMENT WITHOUT INTEGRAL SOLENOID
1977/ ALL - WITH REAR CABLE ATTACHMENT

COPYRIGHT © 1979 FORD MOTOR COMPANY DEARBORN, MICHIGAN

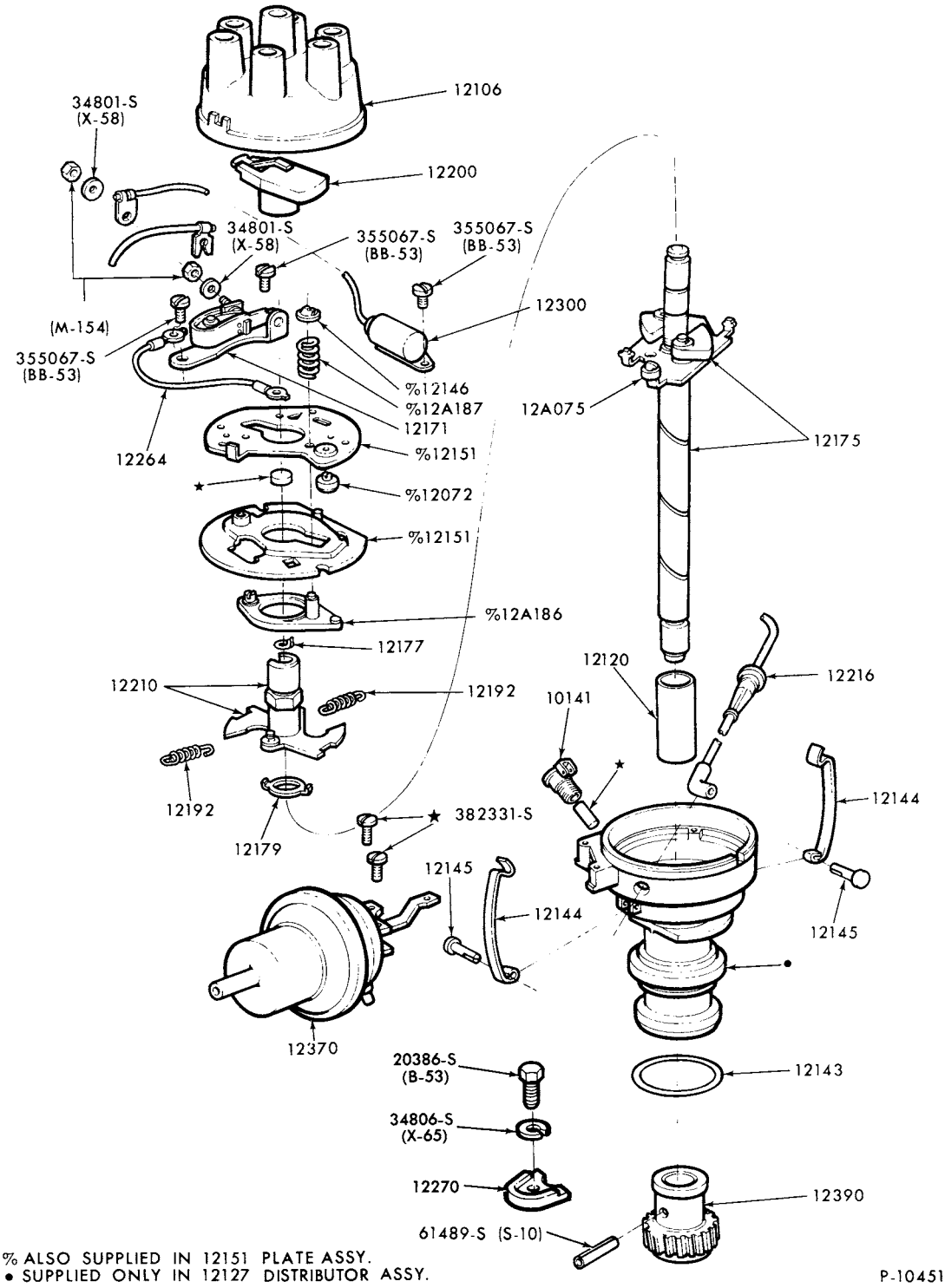

% ALSO SUPPLIED IN 12151 PLATE ASSY.
• SUPPLIED ONLY IN 12127 DISTRIBUTOR ASSY.

P-10451

DISTRIBUTOR (CONVENTIONAL)-TYPICAL
1973/ ALL--6 CYL.

COPYRIGHT © 1979 FORD MOTOR COMPANY - DEARBORN, MICHIGAN

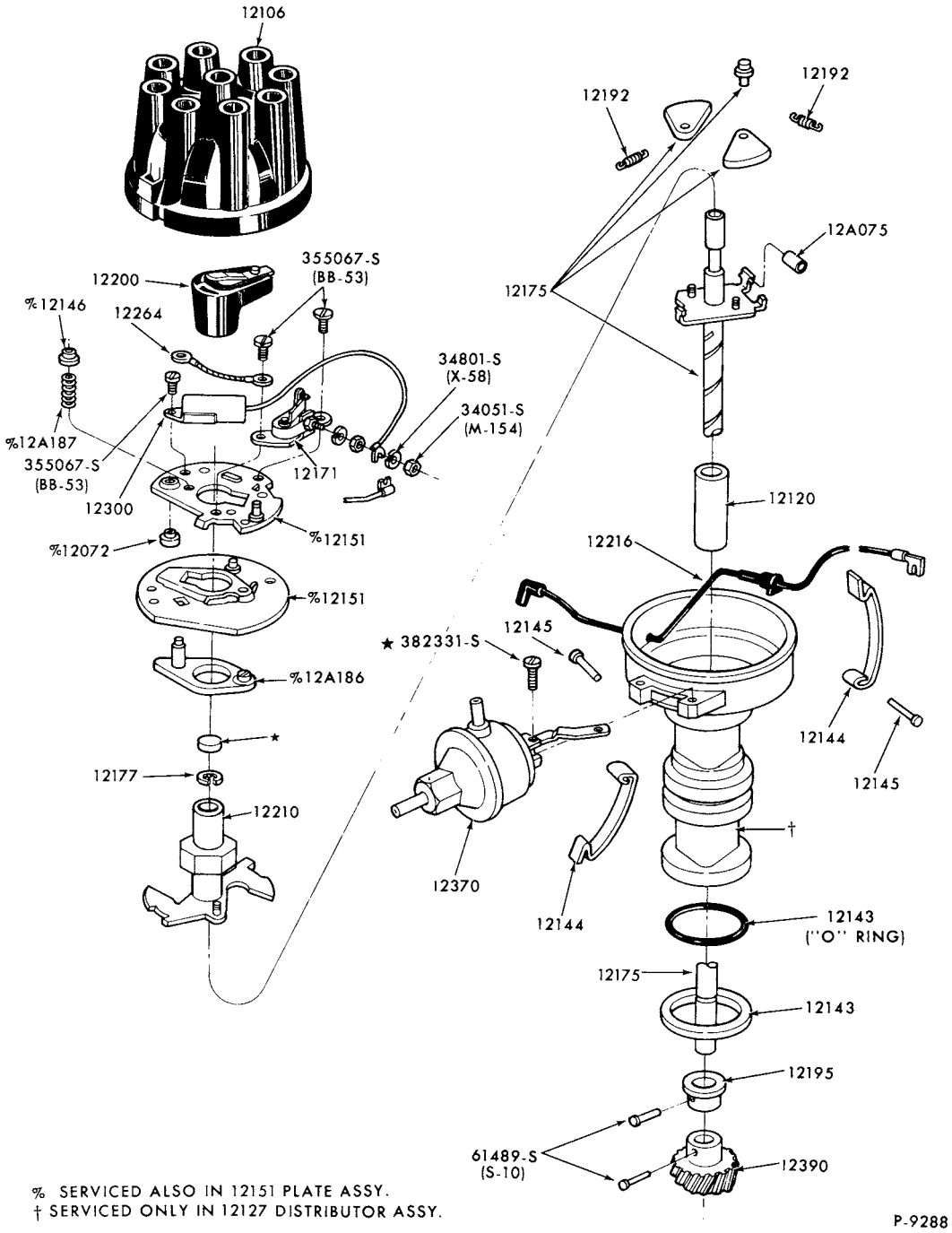

% SERVICED ALSO IN 12151 PLATE ASSY.
† SERVICED ONLY IN 12127 DISTRIBUTOR ASSY.

DISTRIBUTOR (CONVENTIONAL)-TYPICAL
1973/ ALL--8 CYL.

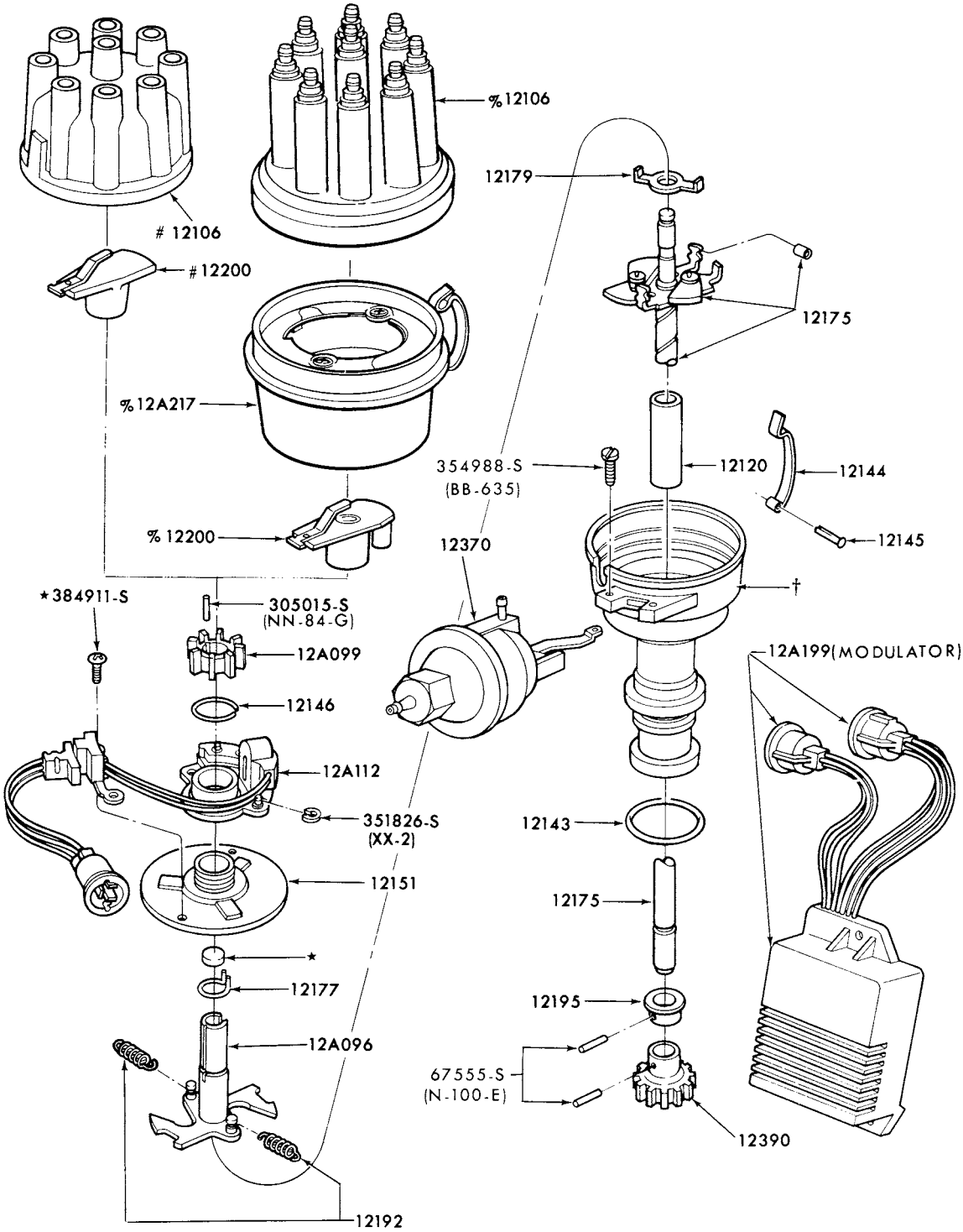

† SERVICED ONLY IN ASSY.-12127 DISTRIBUTOR
# 1975/76
% 1977

P-11057

DISTRIBUTOR (BREAKERLESS)-TYPICAL
1974 ALL--6 and 8 CYL.
1975/ ALL--8 CYL.

COPYRIGHT © 1979 FORD MOTOR COMPANY DEARBORN, MICHIGAN

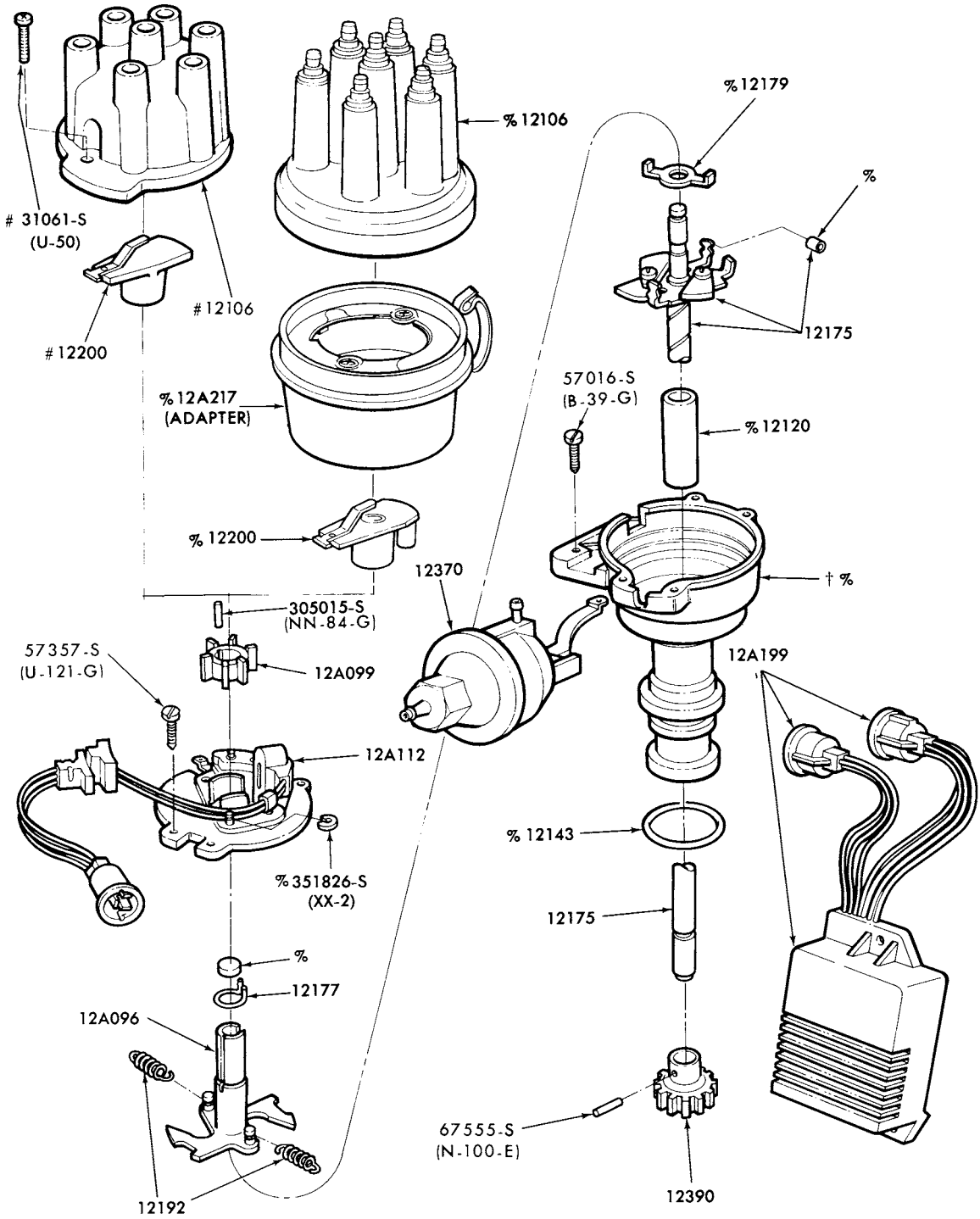

% SERVICED ONLY IN ASSY. -12127 --6 CYL. 171 (2800CC) ENG.
† SERVICED ONLY IN ASSY. — 12127 DISTRIBUTOR
# 1975/76 6 CYL. AND 1975/ 4 CYL.
% 1977 6 CYL. ONLY

P-12857

DISTRIBUTOR (BREAKERLESS)
1975/ ALL--6 CYL.

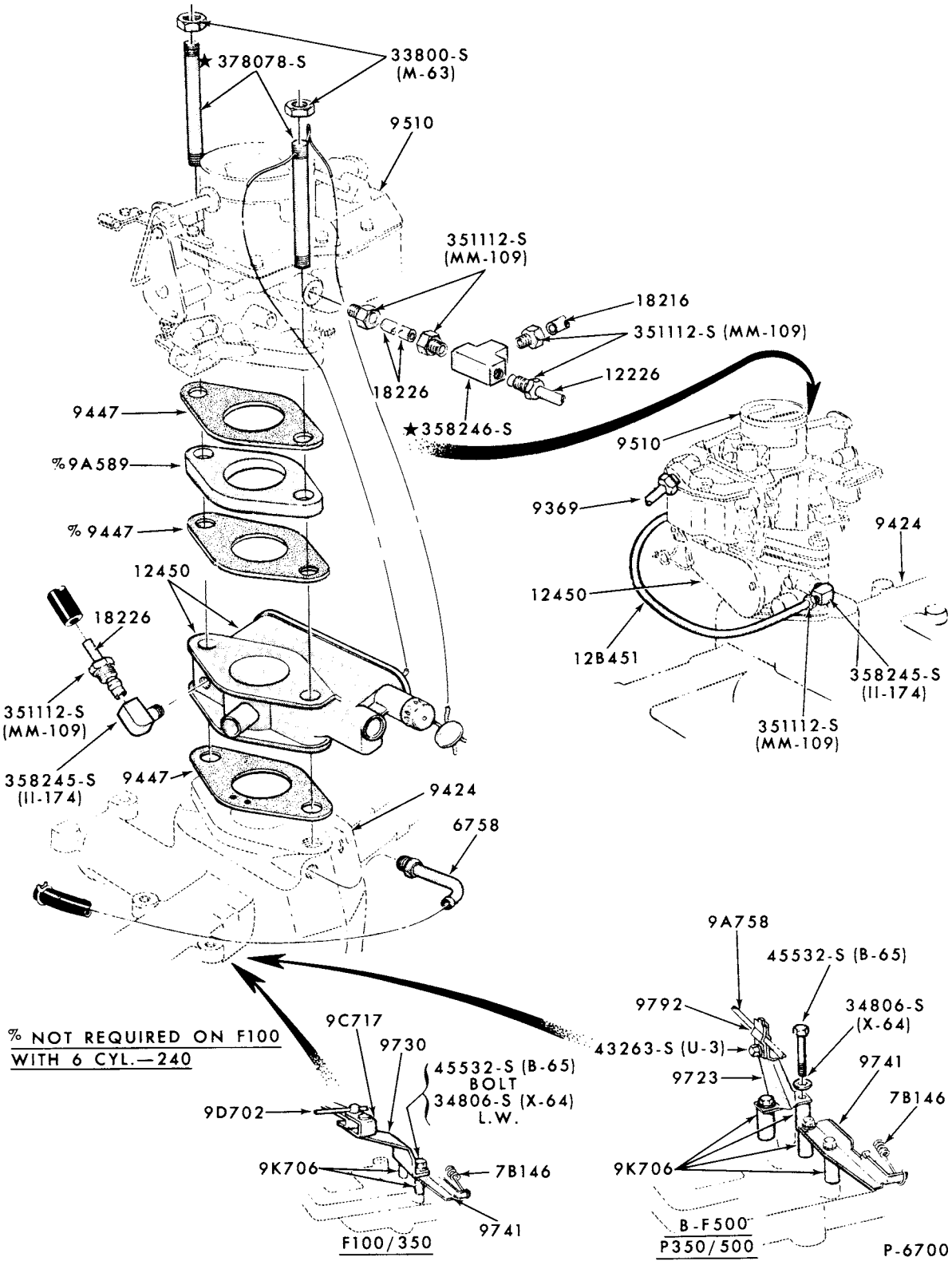

GOVERNOR-VELOCITY TYPE-TYPICAL
1973/ 6 CYLINDER 300 ENGINES

COPYRIGHT © 1979 FORD MOTOR COMPANY, DEARBORN, MICHIGAN

1973/79
TRUCK SERIES 100/500

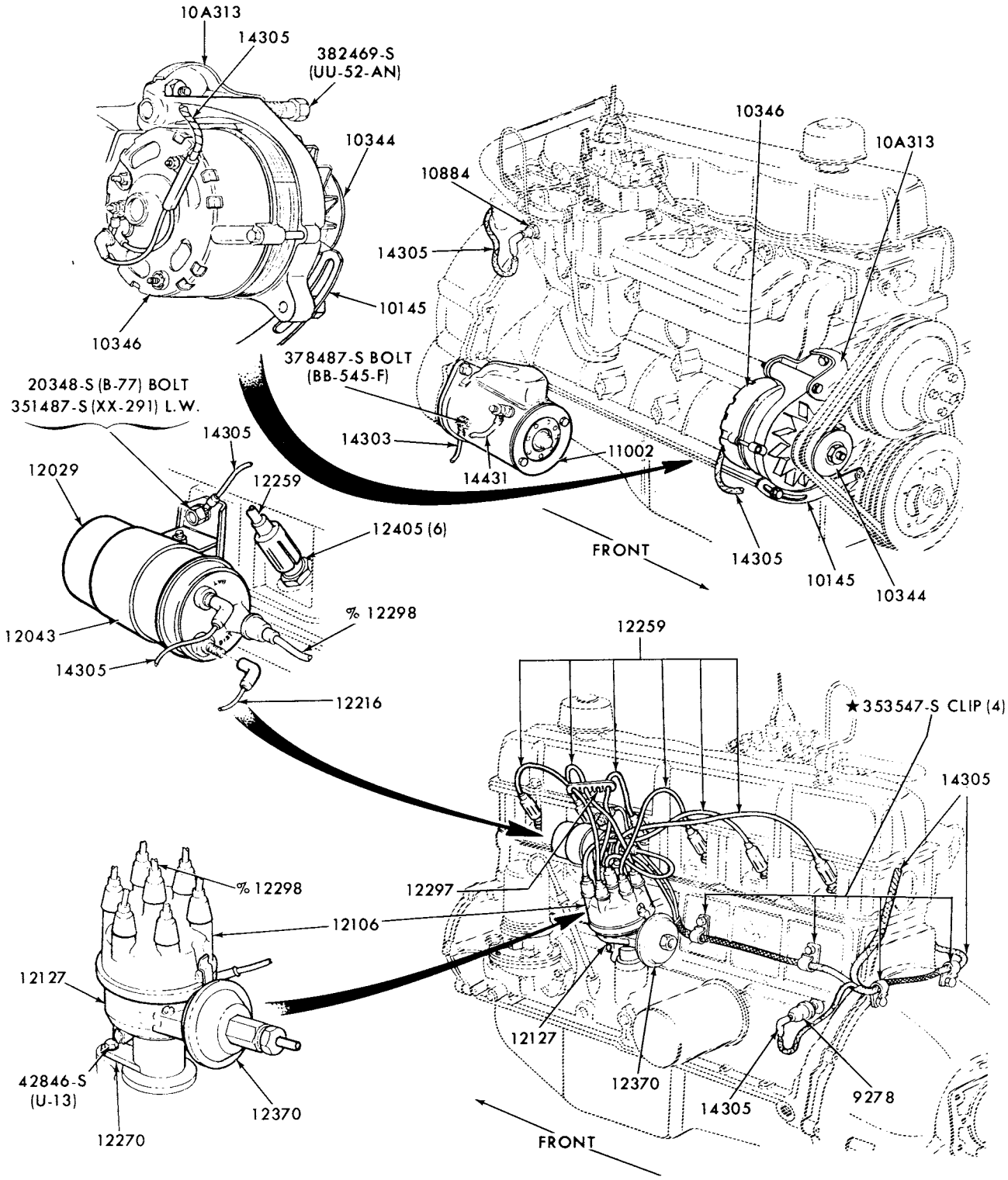

% ALSO SUPPLIED IN 12259 SPARK PLUG WIRE SET

P-8239

IGNITION WIRING (CONVENTIONAL DISTRIBUTOR) SYSTEM-TYPICAL
1973/ E-F100/350--6 CYL. 240 and 300
1973/77 B-F500--6 CYL. 240 and 300

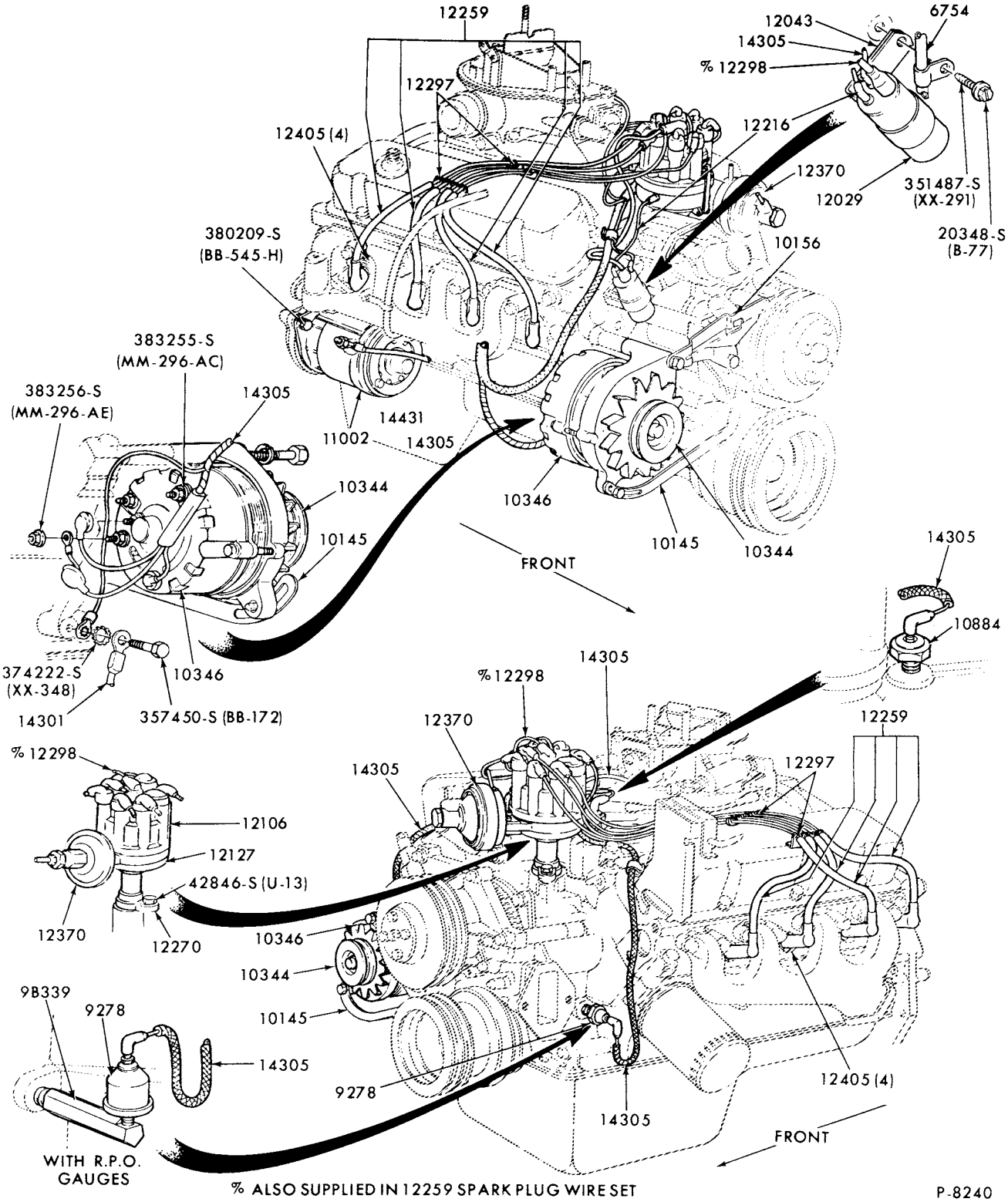

IGNITION WIRING (CONVENTIONAL DISTRIBUTOR) SYSTEM-TYPICAL
1973/74 E100/300 and F100--8 CYL. 302

COPYRIGHT © 1979 FORD MARKETING CORPORATION —DEARBORN, MICHIGAN

1973/79 TRUCK SERIES 100/500

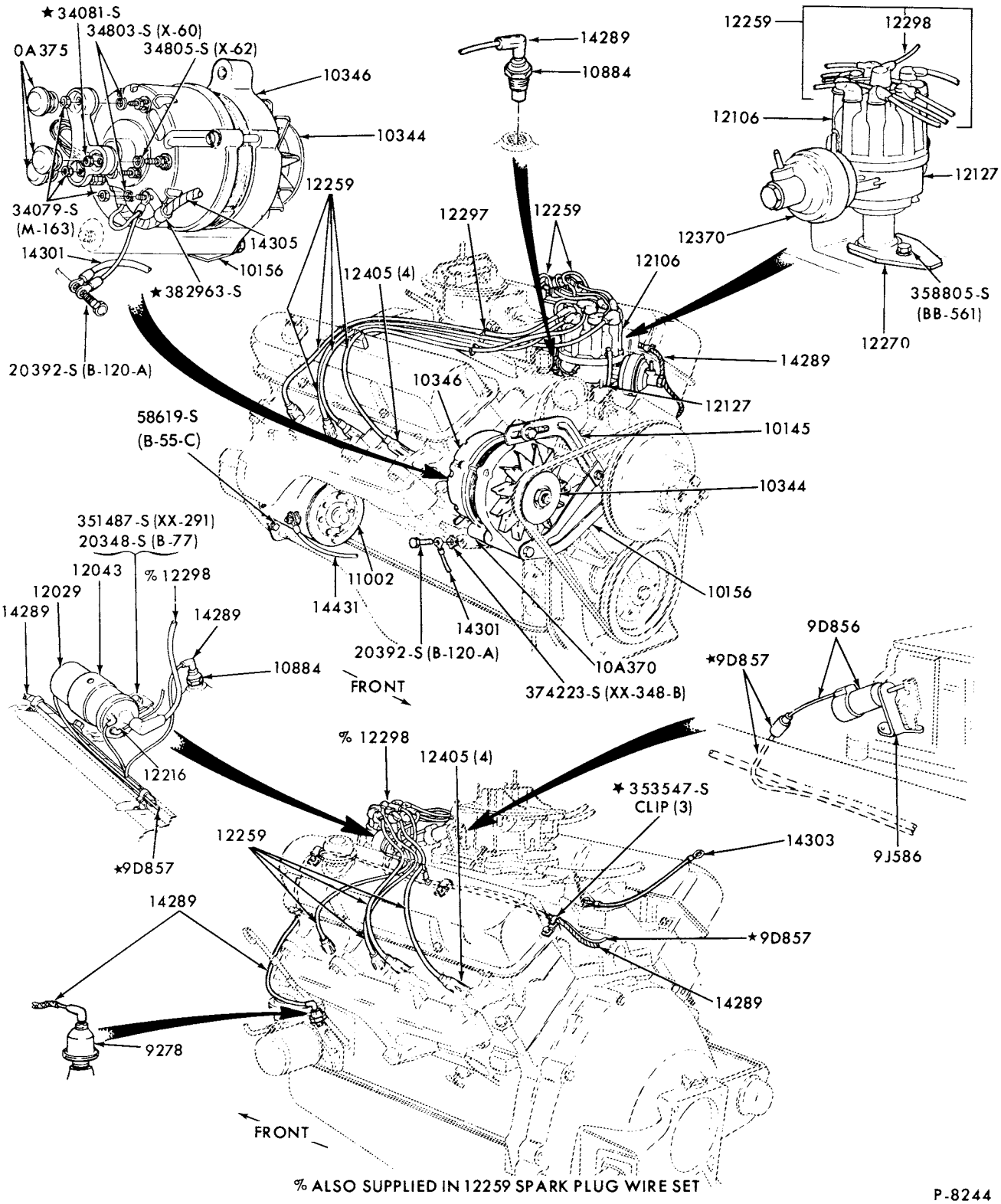

% ALSO SUPPLIED IN 12259 SPARK PLUG WIRE SET

P-8244

IGNITION WIRING (CONVENTIONAL DISTRIBUTOR) SYSTEM-TYPICAL
1973/74 F100/350--8 CYL. 360 and 390

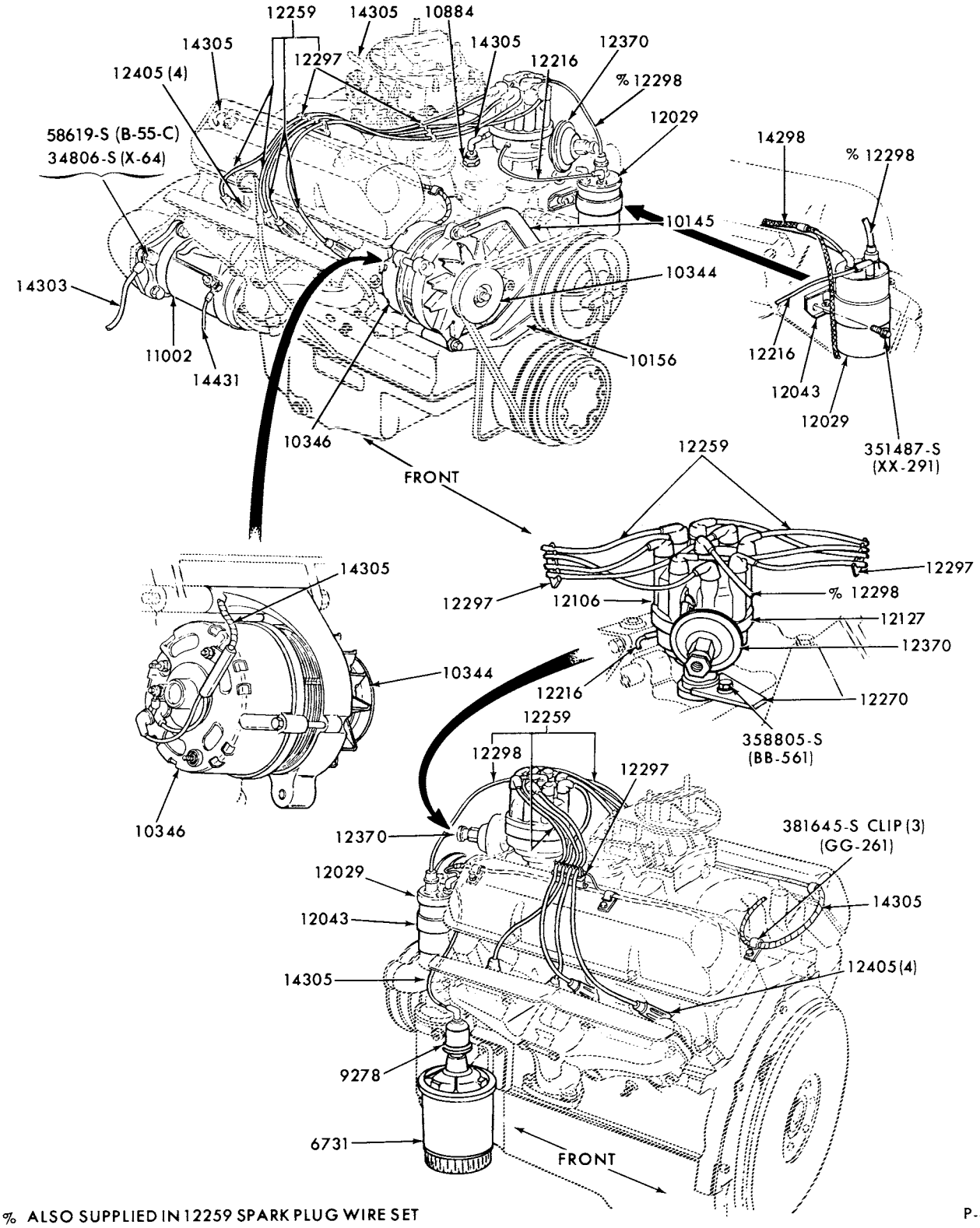

% ALSO SUPPLIED IN 12259 SPARK PLUG WIRE SET

P-8241

IGNITION WIRING (CONVENTIONAL DISTRIBUTOR) SYSTEM-TYPICAL
1973/74 B-F500--8 CYL. 330 M/D

COPYRIGHT © 1979 FORD MOTOR COMPANY DEARBORN, MICHIGAN

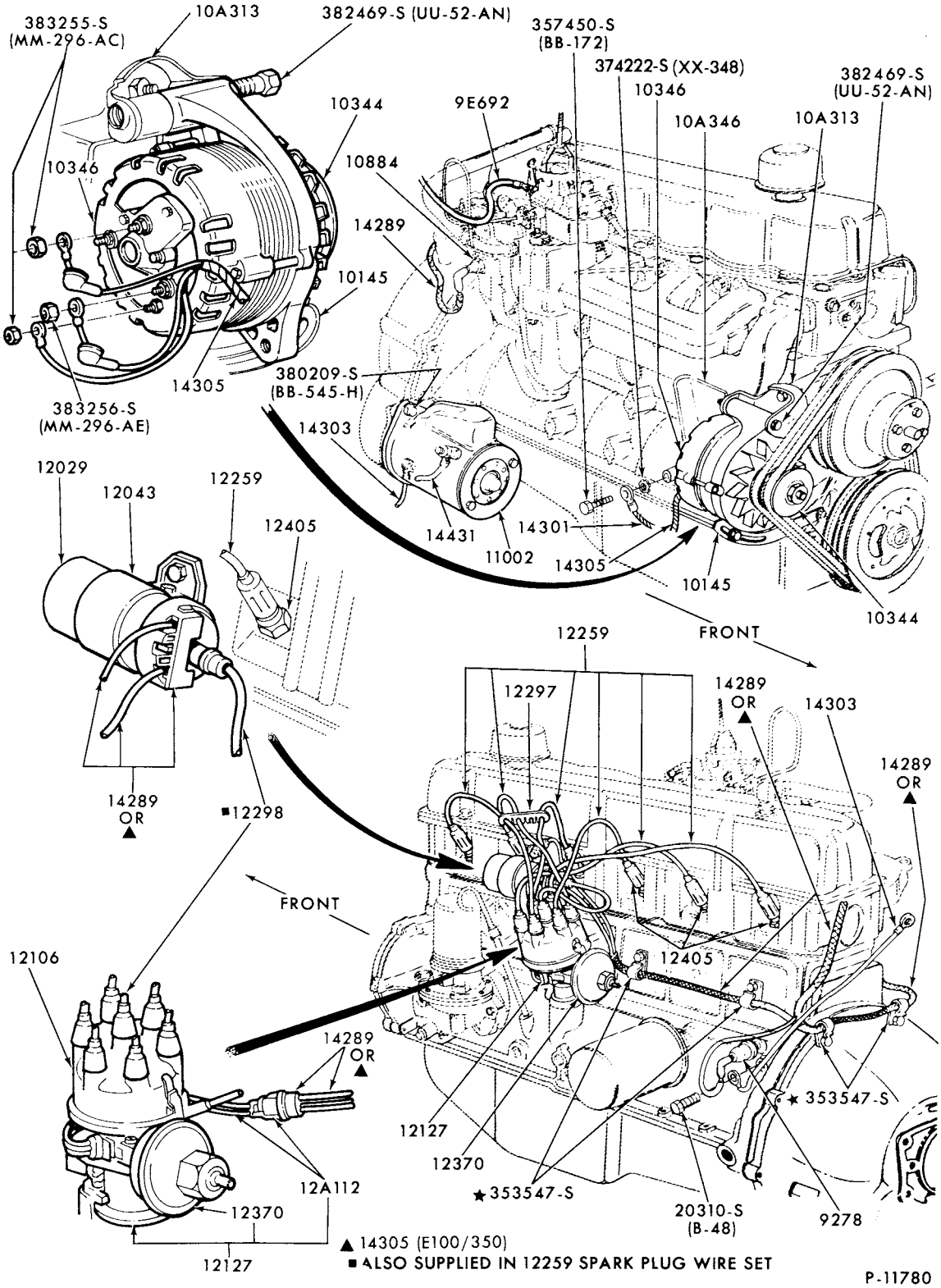

IGNITION WIRING (BREAKERLESS DISTRIBUTOR) SYSTEM-TYPICAL
1974/77 B-F500--6 CYL. 300 and 1974/77 P350/500--6 CYL. 300

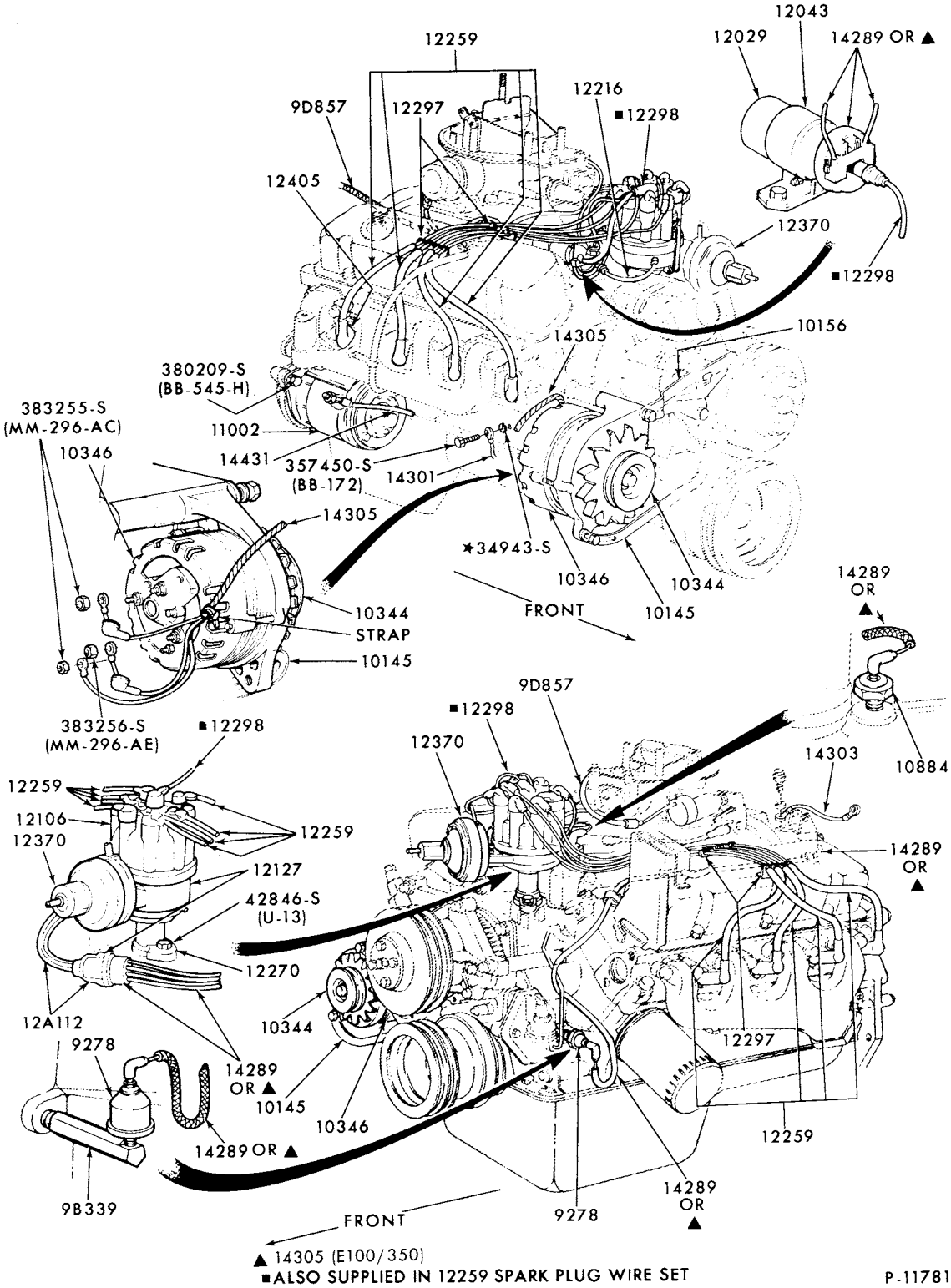

▲ 14305 (E100/350)
■ALSO SUPPLIED IN 12259 SPARK PLUG WIRE SET

P-11781

IGNITION WIRING (BREAKERLESS DISTRIBUTOR) SYSTEM-TYPICAL
1974/ F100--8 CYL. 302

COPYRIGHT © 1979 FORD MOTOR COMPANY DEARBORN, MICHIGAN

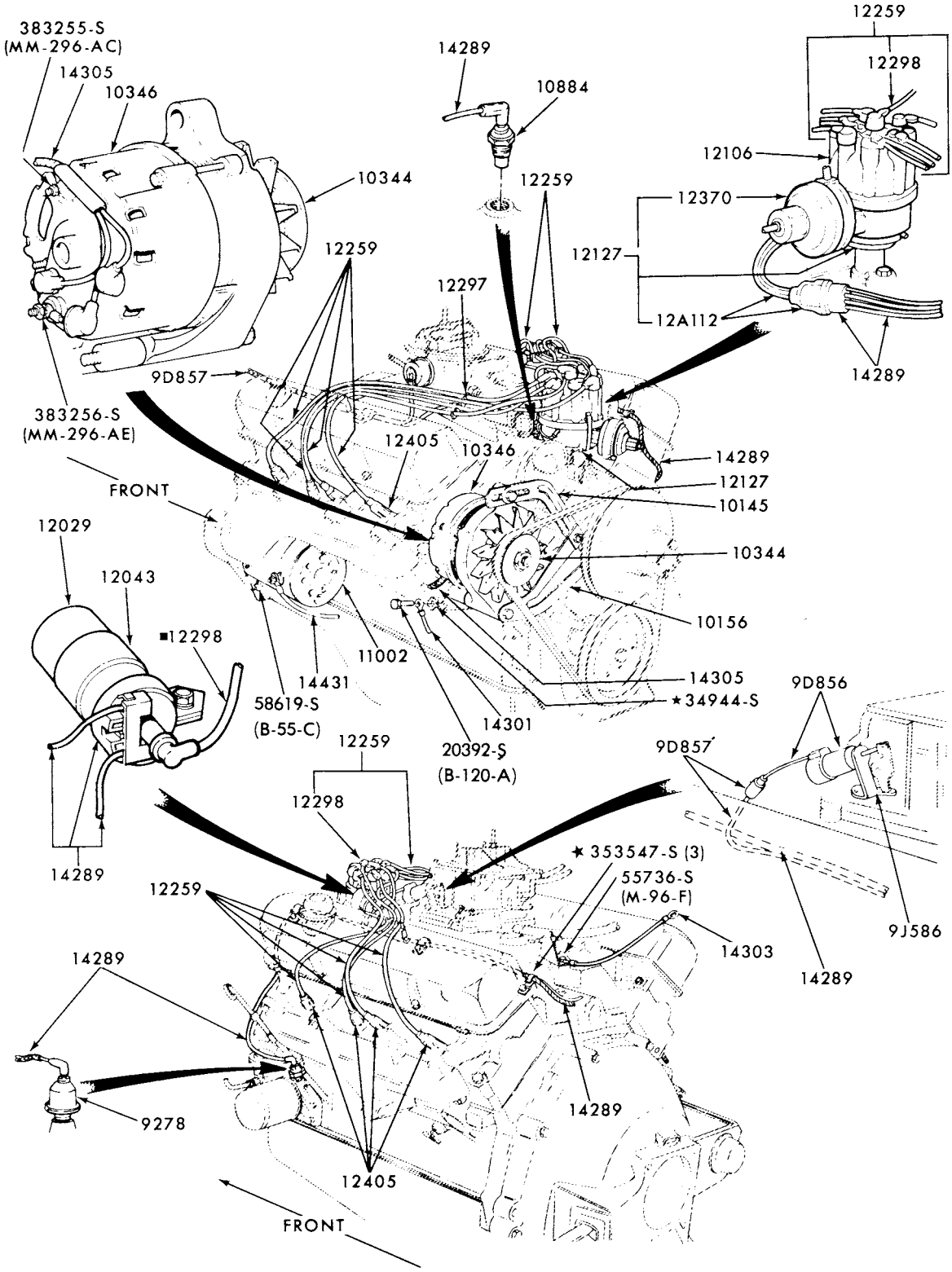

■ALSO SUPPLIED IN 12259 SPARK PLUG WIRE SET

P-11782

IGNITION WIRING (BREAKERLESS DISTRIBUTOR) SYSTEM-TYPICAL
1974/76 F100/350--8 CYL. 360 and 390

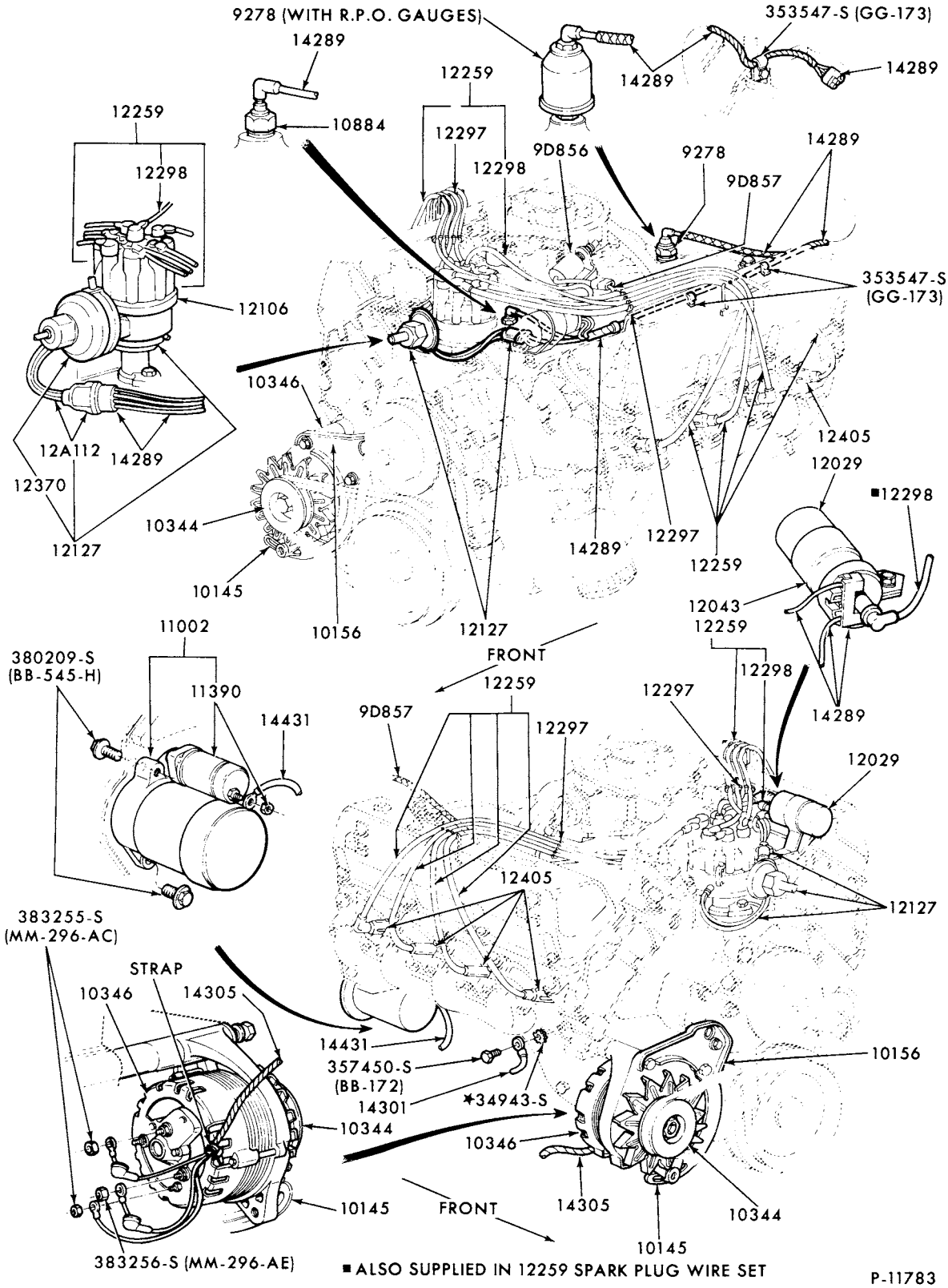

IGNITION WIRING (BREAKERLESS DISTRIBUTOR) SYSTEM-TYPICAL
1974/ F100/350--8 CYL. 460

COPYRIGHT © 1979 FORD MOTOR COMPANY, DEARBORN, MICHIGAN

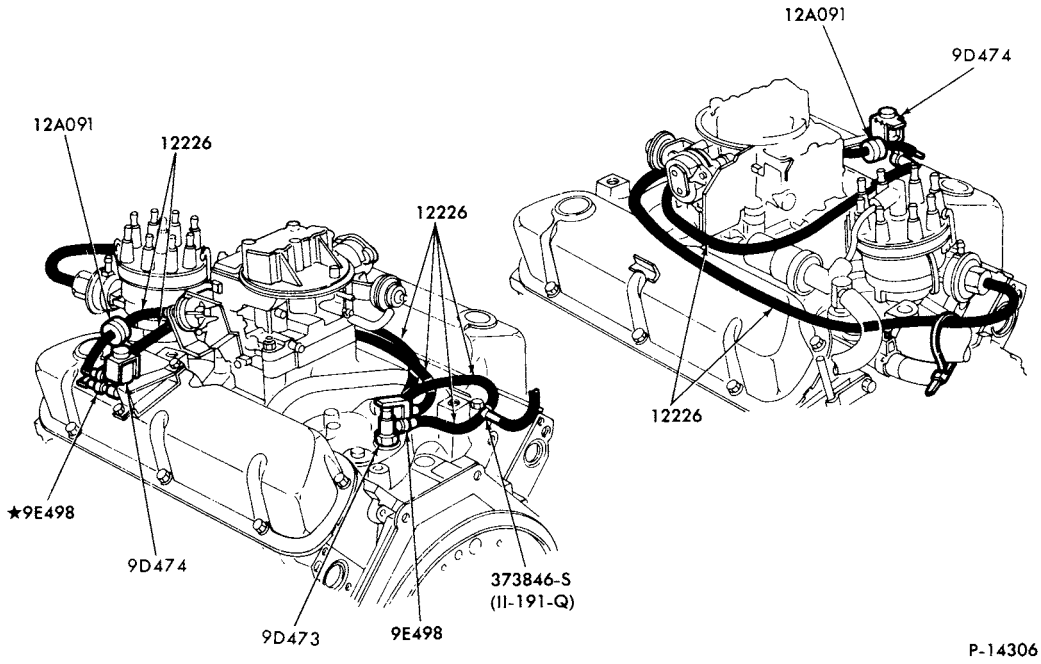

DISTRIBUTOR VACUUM HOSES and RELATED PARTS
1978/ F150--8 CYL. 302 EXC. CALIF.

COPYRIGHT © 1979 FORD MOTOR COMPANY - DEARBORN, MICHIGAN

INDEX

INCLUDED IN THIS INDEX ARE THE FOLLOWING MAJOR GROUPS IN THE ORDER SHOWN BELOW

HEADLAMPS	PARKING LAMPS	WIRING (INSTRUMENT PANEL)
HORN BUTTON or RING	REAR LAMPS	WIRING (MISCELLANEOUS)
LICENSE PLATE LAMPS	DOME LAMPS	WIRING SYSTEMS
BACKUP LAMPS	MARKER LAMPS	TURN INDICATOR and EMERGENCY FLASHER

YEAR 19__	TITLE	MODEL	SECTION	PAGE	ILLUS. NO.
	B SERIES				
	ELECTRICAL SYSTEMS				
73/77	Dash panel wiring and related parts	B500	145.1	5	P-10250
73/77	Emergency warning flasher system	All	145.1	6	P-5803
73/77	Fuse junction panel	All	145.1	6	P-3563
73/77	Turn indicator and emergency warning flasher system	All	145.1	6	P-5803
73/77	Wire connection sleeve kit and crimping tool	All	145	2	P-5344
73/77	Wire terminals	All	145	1	P-3194
73/77	Wiring system--8 cyl.	All	145	5	P-3931
73/77	Wiring system-instrument panel	All	145	8	P-10172
	LAMPS				
73/77	Headlamp, parking lamp, turn signal lamp and related parts	B500	130	1	P-10205
73/77	Marker lamps(roof mounted, fender and bed mounted clearance)-typical	B500	137	6	P-6323
73/77	Rear lamp (incl. license plate lamp and backup lamp)-square type	B500	134	4	P-5961
76/77	Rear lamps (incl.license plate lamp and backup lamp)-square type	B500	134	7	P-12730
	HORN BUTTON or RING				
73/77	Air horn installation	All	137	9	P-12925
73/77	Steering wheel and horn button	All	35	8	P-5802
	E SERIES				
	ELECTRICAL SYSTEMS				
73/74	Backup lamp switch	E100/300	145	8	P-7346
75/	Backup lamp switch	E100/350	145	13	P-13323
73/74	Dash panel wiring	All	145.1	1	P-6325
75	Dash panel wiring	E100/350	145.1	10	P-11992
76/	Dash panel wiring	E100/350	145.1	11	P-13020
73/	Relay feed wiring-w/dual batteries	E100/350	145	19	P-16245
73/	Relay feed wiring-w/o dual batteries	E100/350	145	19	P-16246
73/74	Turn indicator wiring	E100/350	35	2	P-6451
73/	Turn indicator and emergency flasher warning system	E100/350	145.1	7	P-8895
73/	Wire connection sleeve kit and crimping tool	All	145	2	P-5344
73/	Wire terminals	All	145	1	P-3194
73/	Wiring system	E100/350	145	3	P-6469
73/74	Wiring system (instrument panel)-printed circuit	E100/350	145	6	P-8894
75/	Wiring system (instrument panel)-printed circuit	E100/350	145	14	P-11631
73/	Wiring system-interior and exterior lamps	E100/350	137	4	P-6468
75/	Wiring system-fender apron and related parts	E100/350	145	15	P-12291
78/	Wiring system - power door locks - Page A	All	145.1	13	P-16086
	- Page B	All	145.1	14	P-16087
	LAMPS				
73/	Courtesy lamp wiring, switches and related parts	E100/350	137	3	P-6473
73/74	Dome and cargo lamp	E100/300	137	1	P-8435
75/	Dome and cargo lamp	E100/350	137	8	P-12210
78/	Fog lamps and related parts - Page A	E100/350	130	8	P-14551
	- Page B	E100/350	130	9	P-14552
73/74	Headlamp, parking lamp, reflectors or front side marker lamps and related parts	E100/300	130	1	P-6324
75/78	Headlamp, parking lamp, marker lamps and related parts	E100/350	130	5	P-11519
79	Headlamp, parking lamp, marker lamps and related parts	E100/350	130	12	P-14729

COPYRIGHT © 1980 FORD MOTOR COMPANY —DEARBORN, MICHIGAN

INDEX

YEAR 19__	TITLE	MODEL	SECTION	PAGE	ILLUS. NO.
	E SERIES				
	LAMPS - cont'd.				
75/	Rear lamp, backup lamp, license plate lamp and related parts	E100/350	134	5	P-11523
73/74	Rear lamp, backup lamp, license plate lamp, reflectors or marker lamps and related parts	E100/300	134	1	P-6328
73/76	Warning lamps, wiring and related parts (School Bus-roof mounted)	E150/300(82, 89E and F)	137	5	P-6934
75/	Rear mounted marker lamps and related parts	E100/350	134	6	P-11524
	HORN BUTTON or RING				
73/	Air horn installation	All	137	9	P-12925
73/74	Steering wheel and horn ring	E100/350	35	2	P-6451
	F SERIES				
	ELECTRICAL SYSTEMS				
73/	Back-up lamp switch and wiring-typical-Page A	All	145	11	P-10569-A
73/	Back-up lamp switch and wiring-typical-Page B	All	145	12	P-10569-B
73/	Camper wiring	F100/350	145	10	P-10697
74/	Courtesy lamps and wiring	F100/350	137	7	P-11785
73/75	Dash panel wiring and related parts	F100/350(81)	145.1	2	P-10247
76/	Dash panel wiring and related parts	F100/350(81)	145.1	12	P-13022
73/	Dash panel wiring and related parts	F350(84)	145.1	3	P-10249
73/77	Dash panel wiring and related parts	F500(81)	145.1	4	P-10248
73/77	Dash panel wiring and related parts	F500(84)	145.1	5	P-10250
73/	Dual battery wiring and relay installation	F100/350	145	10	P-10697
73/77	Emergency warning flasher system	F500	145.1	6	P-5803
73/	Engine compartment lamp	F100/350	145	13	P-11905
73/	Fuse-junction panel	All	145.1	6	P-3563
73/	Turn indicator and emergency flasher warning system	F100/350	145.1	8	P-8898
73	Turn indicator wiring	F100/350--2/W/D	35	3	P-10638
74/77	Turn indicator wiring	F100/350--2/W/D	35	15	P-11049
73/77	Turn indicator wiring and emergency warning flasher system	F500	145.1	6	P-5803
73/	Wire connection sleeve kit and crimping tool	All	145	2	P-5344
73/	Wire terminals	All	145	1	P-3194
73/	Wiring assy. -trailer towing installation	F100/350	145	9	P-10363
73/77	Wiring system--8 cyl.	F100/350	145	4	P-3930
73/77	Wiring system--8 cyl.	F500	145	5	P-3931
78/	Wiring system - Page A	F100/350	145	16	P-16088
	- Page B	F100/350	145	17	P-16089
	- Page C	F100/350	145	18	P-16090
73/	Wiring system (instrument panel)-printed circuit	F100/350	145	6	P-10169
73/76	Wiring system-instrument panel	F350(84)	145	7	P-10170
73/77	Wiring system-instrument panel	F500(81)	145	7	P-10171
73/77	Wiring system-instrument panel	F500(84)	145	8	P-10172
	LAMPS				
73/77	Cargo lamp and related parts	F100/350	137	2	P-10209
73/	Dome lamp and related parts	F100/350	137	1	P-10208
73/77	Dome lamp and related parts	F500	137	1	P-10208
78/	Fog lamps and related parts - Page A	F100/350	130	10	P-14556
	- Page B	F100/350	130	11	P-14557
73/77	Headlamp, parking lamp, front fender marker lamp and related parts	F100/350	130	2	P-10158
78/	Headlamp, parking lamp and marker lamp - round	F100/350	130	7	P-14090
	- rectangular	F100/350	130	6	P-14086
73/77	Headlamp, parking lamp, turn signal lamp and related parts	F500	130	1	P-10205

INDEX

YEAR 19__	TITLE	MODEL	SECTION	PAGE	ILLUS. NO.
	F SERIES				
	LAMPS - cont'd.				
73/	Marker lamps (roof mounted, fender and bed mounted clearance) -typical	F100/350	137	6	P-6323
73/77	Marker lamps (roof mounted, fender and bed mounted clearance) -typical	F500	137	6	P-6323
73/	Mirror marker lamp, wiring and related parts	F350	145.1	9	P-8557
73/77	Mirror marker lamp, wiring and related parts	F500	145.1	9	P-8557
76/	Rear lamp and side marker lamp	F100/350	134	9	P-12734
76/77	Rear lamp and side marker lamp	F500	134	9	P-12734
73/75	Rear lamp (incl. license plate and backup lamp)-square type	F100/350-exc. 99	134	4	P-5961
76/	Rear lamp (incl. license plate and backup lamp)-square type	F350	134	7	P-12730
76/77	Rear lamp (incl. license plate and backup lamp)-square type	F500(80,84)	134	7	P-12730
73/75	Rear lamps, body side marker lamps and related parts	F100/350(83)	134	3	P-7348
73/74	Rear lamp, marker lamp and license plate lamp	F100/350(99)	134	2	P-10163
73/75	Rear lamp (incl. license plate and backup lamp)-square type	F500	134	4	P-5961
76/77	Rear lamp, body side marker lamp and related parts- "Before Ser. 20,000"	F100/250(83)	134	7	P-12732
77/	Rear lamp, license lamp and related parts- "From Ser. 20,000"	F100/250(83)	134	9	P-13271
75/	Rear lamp, marker lamp and license plate lamp	F100/350(99)	134	4	P-12733
76/	Rear, side and roof lamps	F350(80,86)	134	8	P-12731
	HORN BUTTON or RING				
73/	Air horn installation	All	137	9	P-12925
73/	Steering wheel and horn bar	F100/350	35	10	P-11669
73/77	Steering wheel and horn button	F500	35	8	P-5802
	M SERIES				
	Refer to "P" Series for illustrations				
	P SERIES				
	ELECTRICAL SYSTEMS				
73/77	Fuse-junction panel	P350/500	145.1	6	P-3563
73/77	Wire connection sleeve kit and crimping tool	All	145	2	P-5344
73/77	Wire terminals	All	145	1	P-3194
	LAMPS				
73/77	Headlamp parts-typical	All	130	3	P-2844
73	Parking lamp-typical	All	130	3	P-2046
74/77	Parking lamp-typical	All	130	4	P-11612
73/75	Rear lamp (incl. license plate and backup lamp)-square type	All	134	4	P-5961
76/77	Rear lamp (incl. license plate and backup lamp)-square type	P350/500	134	7	P-12730
	HORN BUTTON or RING				
73/77	Air horn installation	All	137	9	P-12925
73/77	Steering wheel and horn button	All	35	5	P-9966

COPYRIGHT © 1979 — FORD MOTOR COMPANY —DEARBORN, MICHIGAN

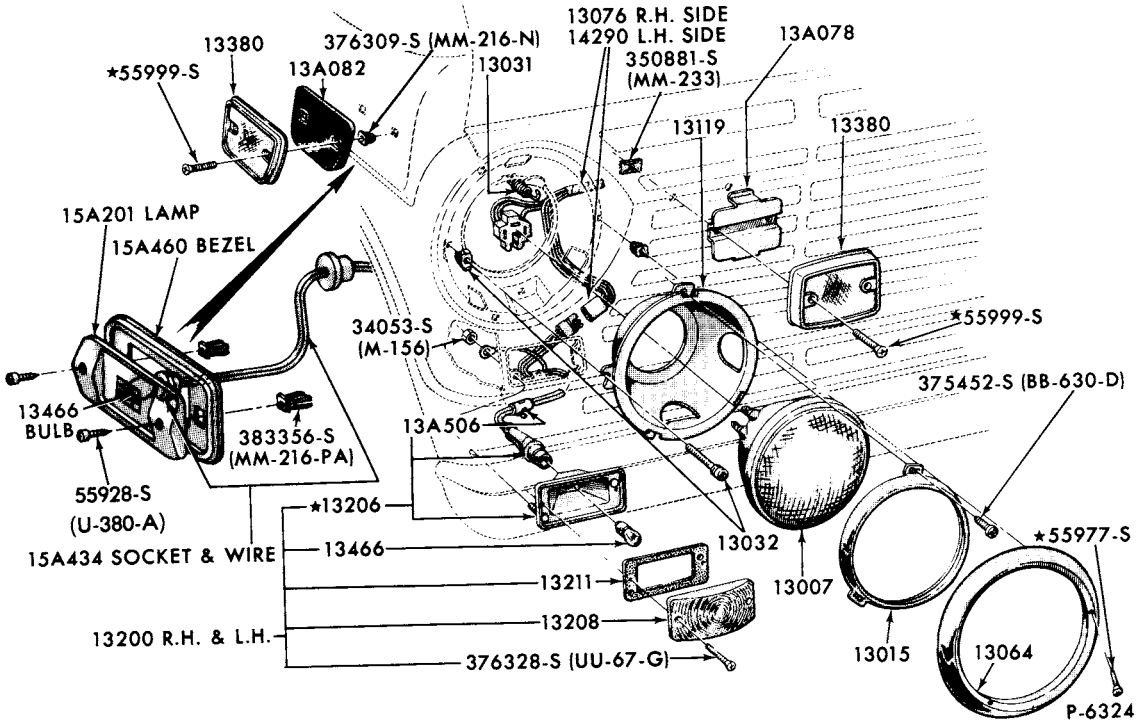

HEADLAMP, PARKING LAMP, REFLECTORS or FRONT SIDE MARKER LAMPS and RELATED PARTS
1973/74 E100/300

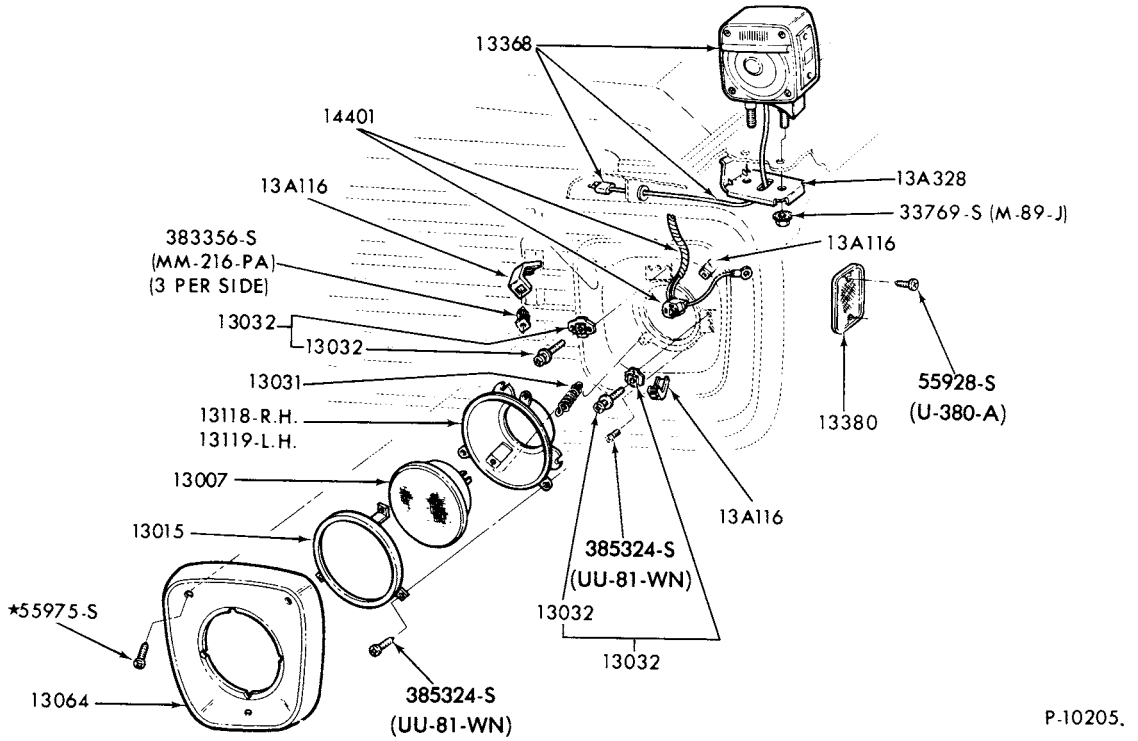

HEADLAMP, PARKING LAMP, TURN SIGNAL LAMP and RELATED PARTS
1973/77 B-F500

COPYRIGHT © 1979 FORD MOTOR COMPANY, DEARBORN, MICHIGAN

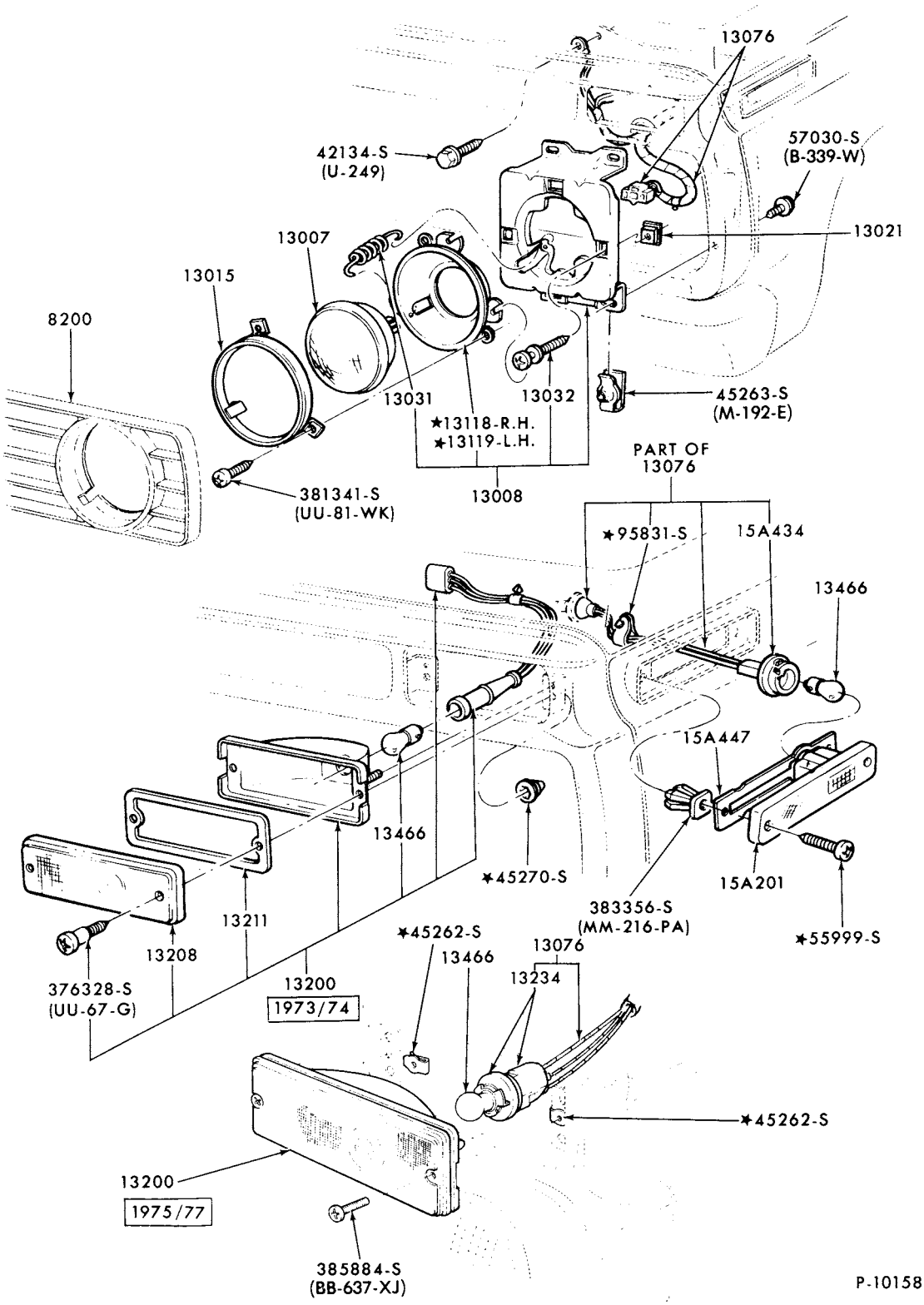

HEADLAMP, PARKING LAMP, FRONT FENDER MARKER LAMP and RELATED PARTS
1973/77 F100/350

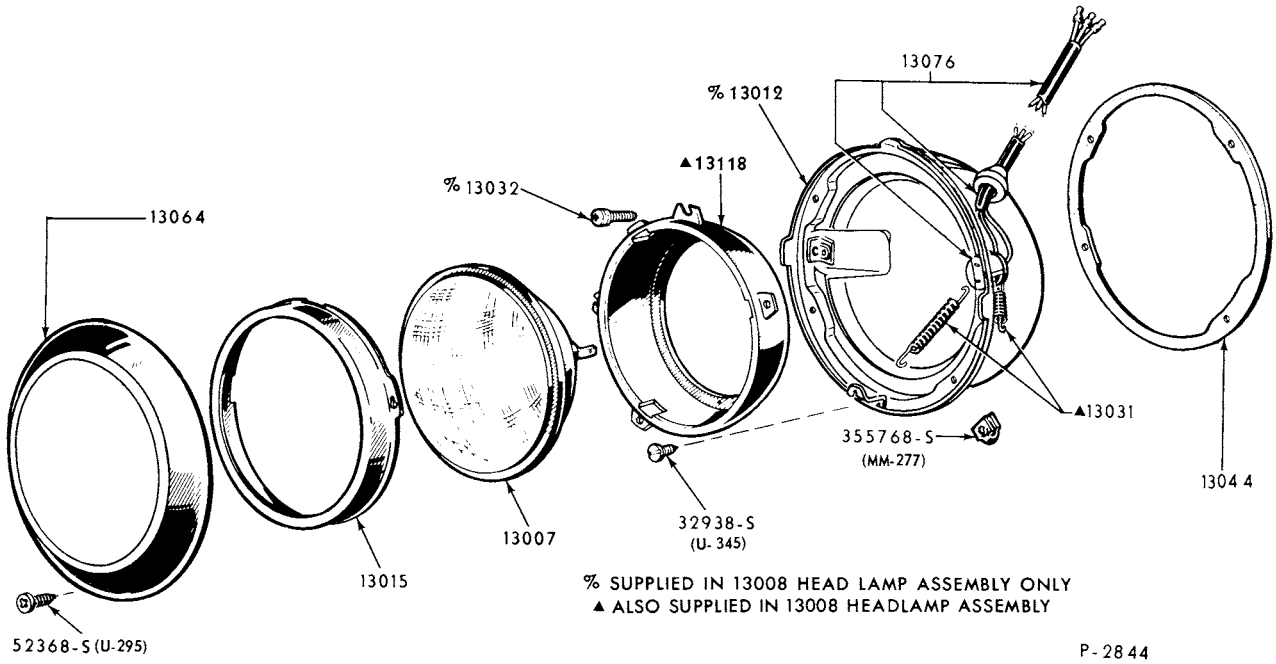

HEADLAMP PARTS-TYPICAL
1973/77 P350/500

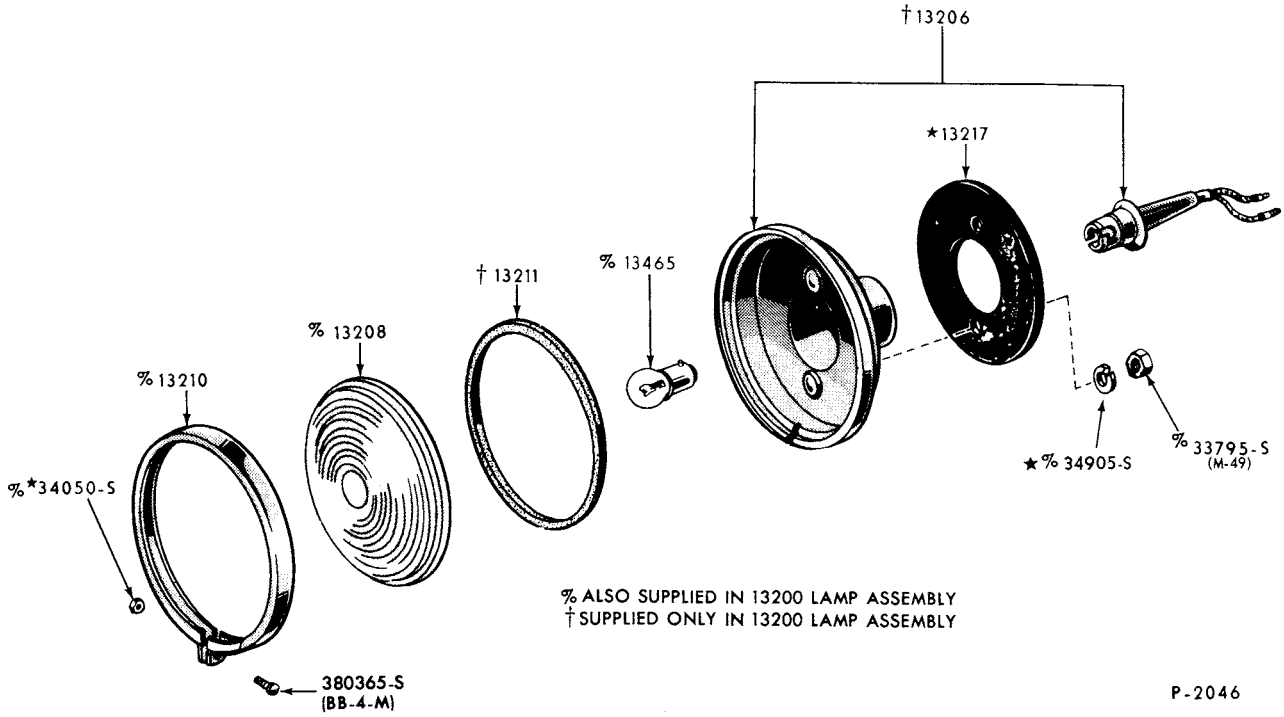

PARKING LAMP-TYPICAL
1973 P350/500

COPYRIGHT © 1979 FORD MOTOR COMPANY — DEARBORN, MICHIGAN

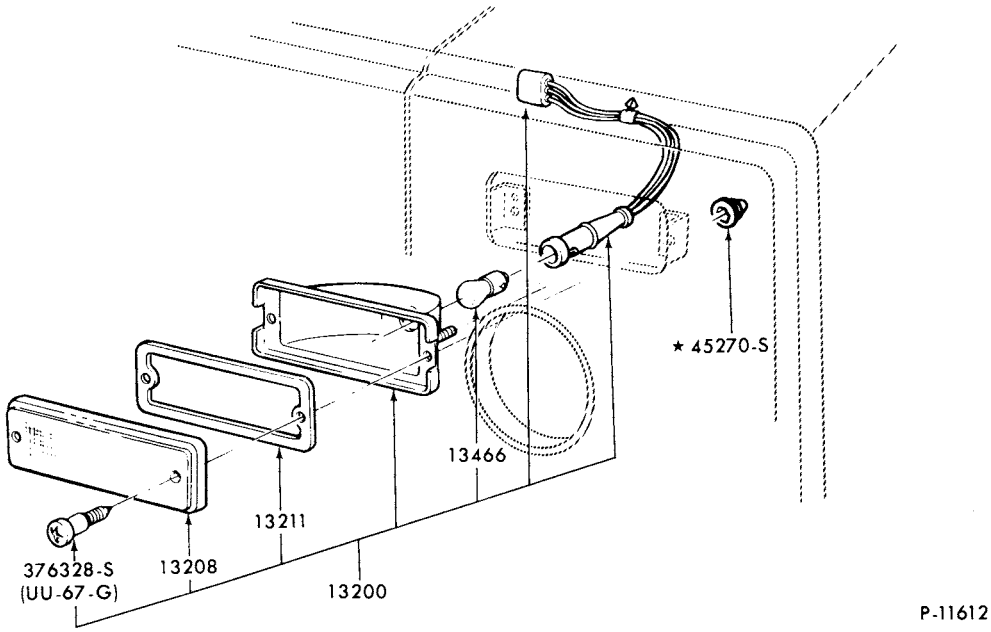

PARKING LAMP-TYPICAL
1974/77 P350/500

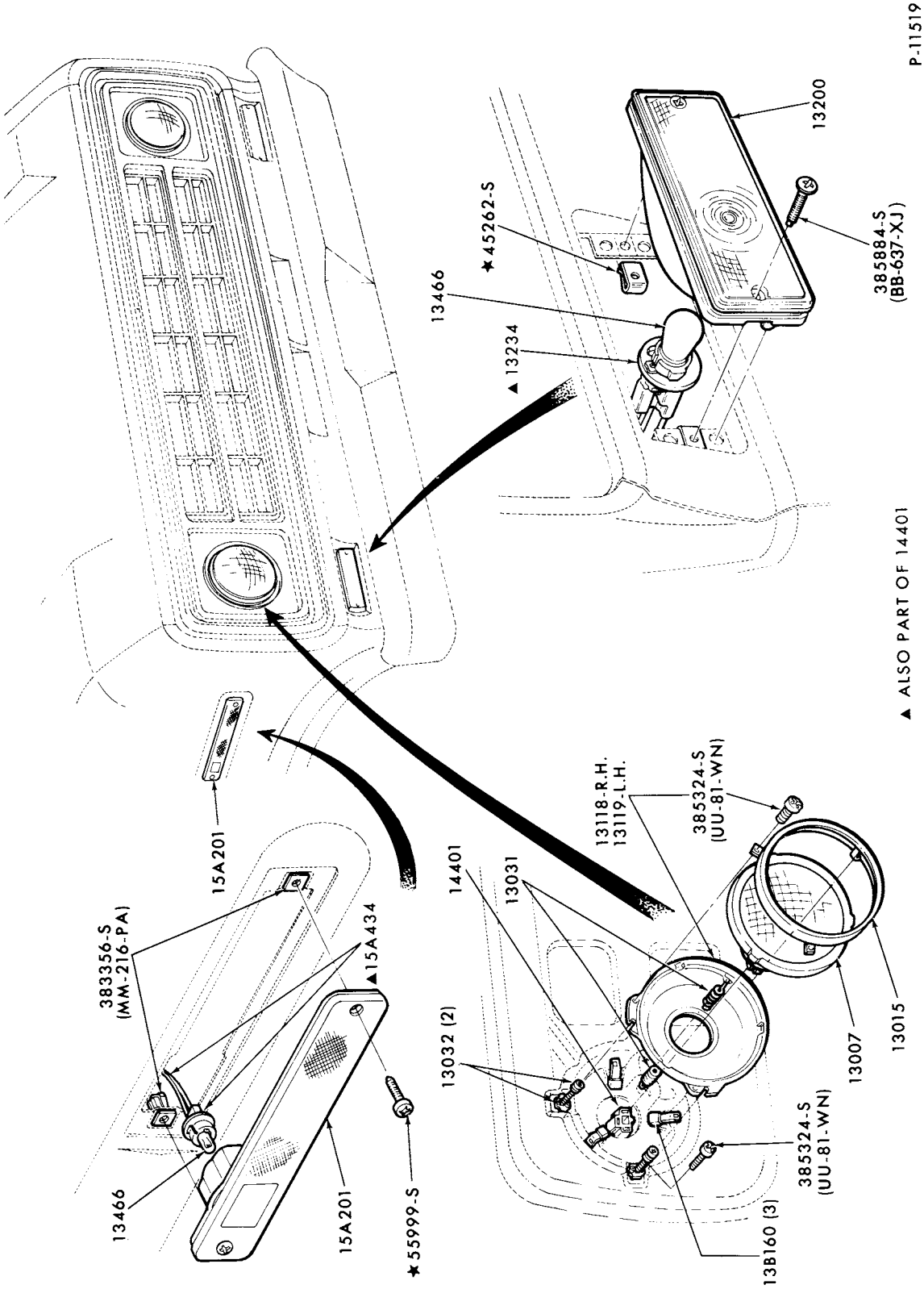

HEADLAMP, PARKING LAMP, MARKER LAMPS and RELATED PARTS
1975/78 E100/350

COPYRIGHT © 1979 FORD MOTOR COMPANY DEARBORN, MICHIGAN

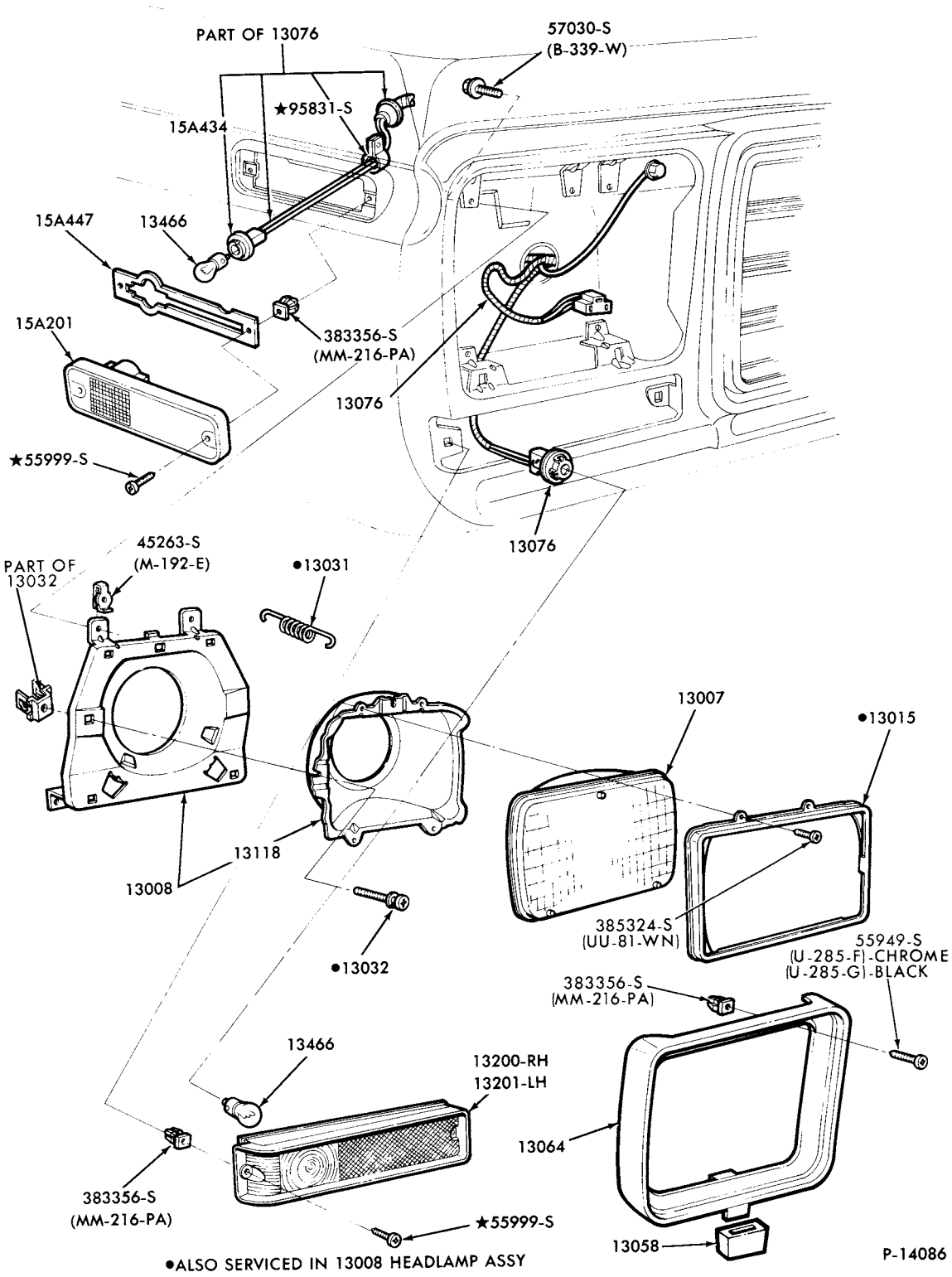

HEADLAMP, PARKING LAMP, FRONT FENDER MARKER LAMP and RELATED PARTS-
RECTANGULAR HEADLAMPS
1978/ F100/350

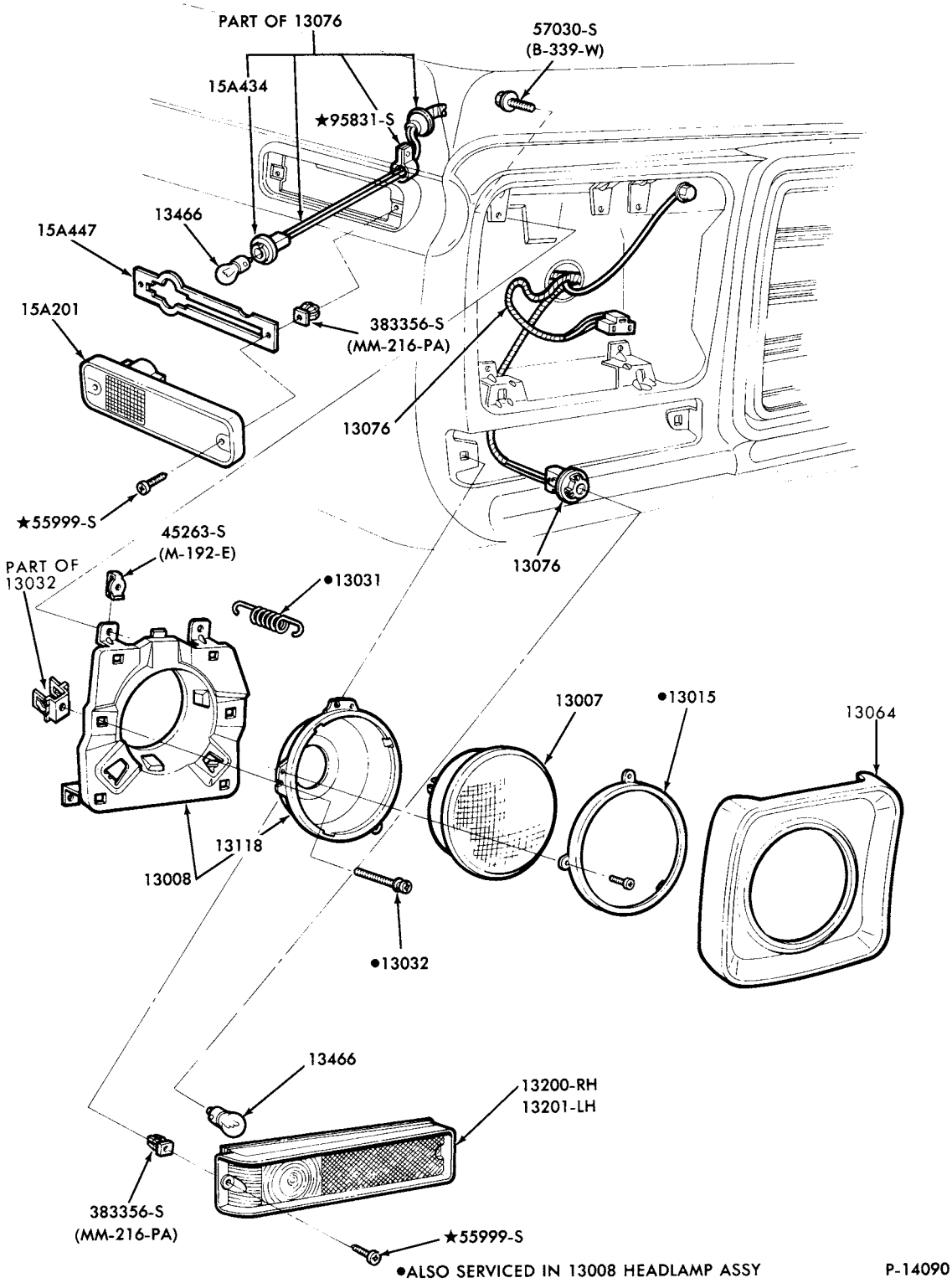

HEADLAMP, PARKING LAMP, FRONT FENDER MARKER LAMP and RELATED PARTS-
ROUND HEADLAMPS
1978/ F100/350

COPYRIGHT © 1979 FORD MOTOR COMPANY—DEARBORN, MICHIGAN

1973/79 TRUCK SERIES 100/500

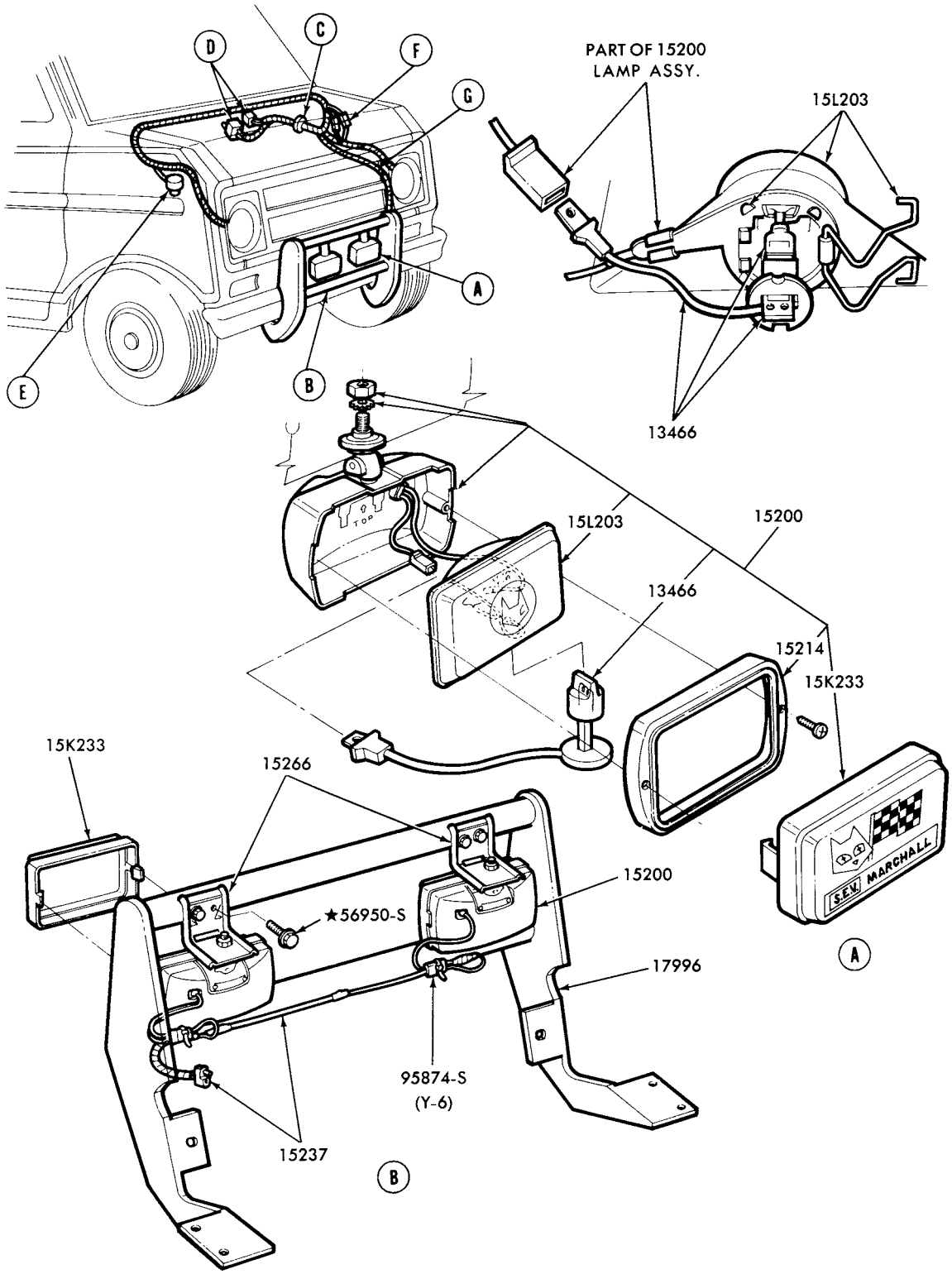

PAGE-A CONTINUED ON PAGE B

P-14551

FOG LAMPS and RELATED PARTS
1978/ E100/350 - PAGE A

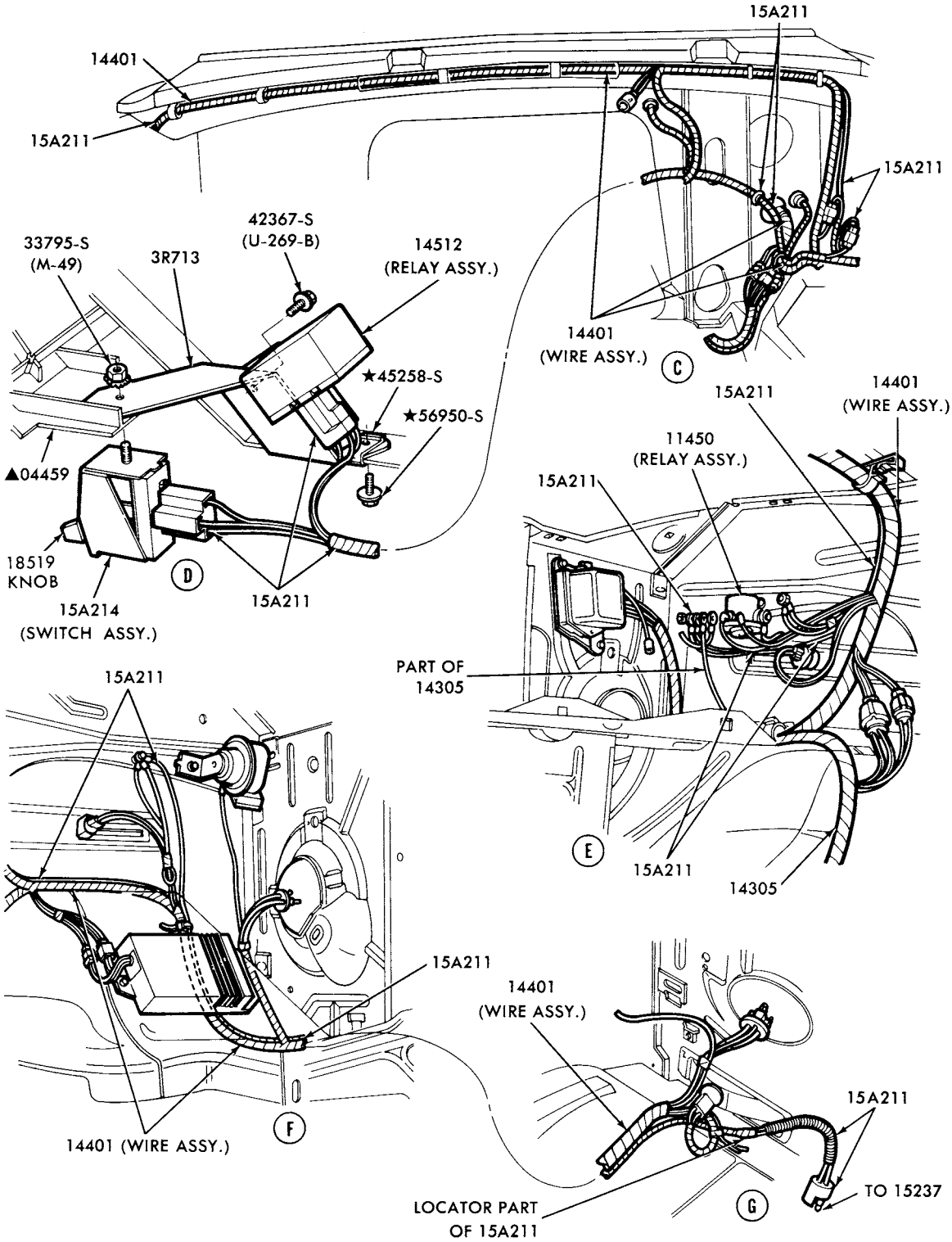

▲REFER TO GROUP IN BODY SECTION

PAGE B CONTINUED

P-14552

FOG LAMPS and RELATED PARTS
1978/ E100/350 - PAGE B

COPYRIGHT © 1979 FORD MOTOR COMPANY, DEARBORN, MICHIGAN

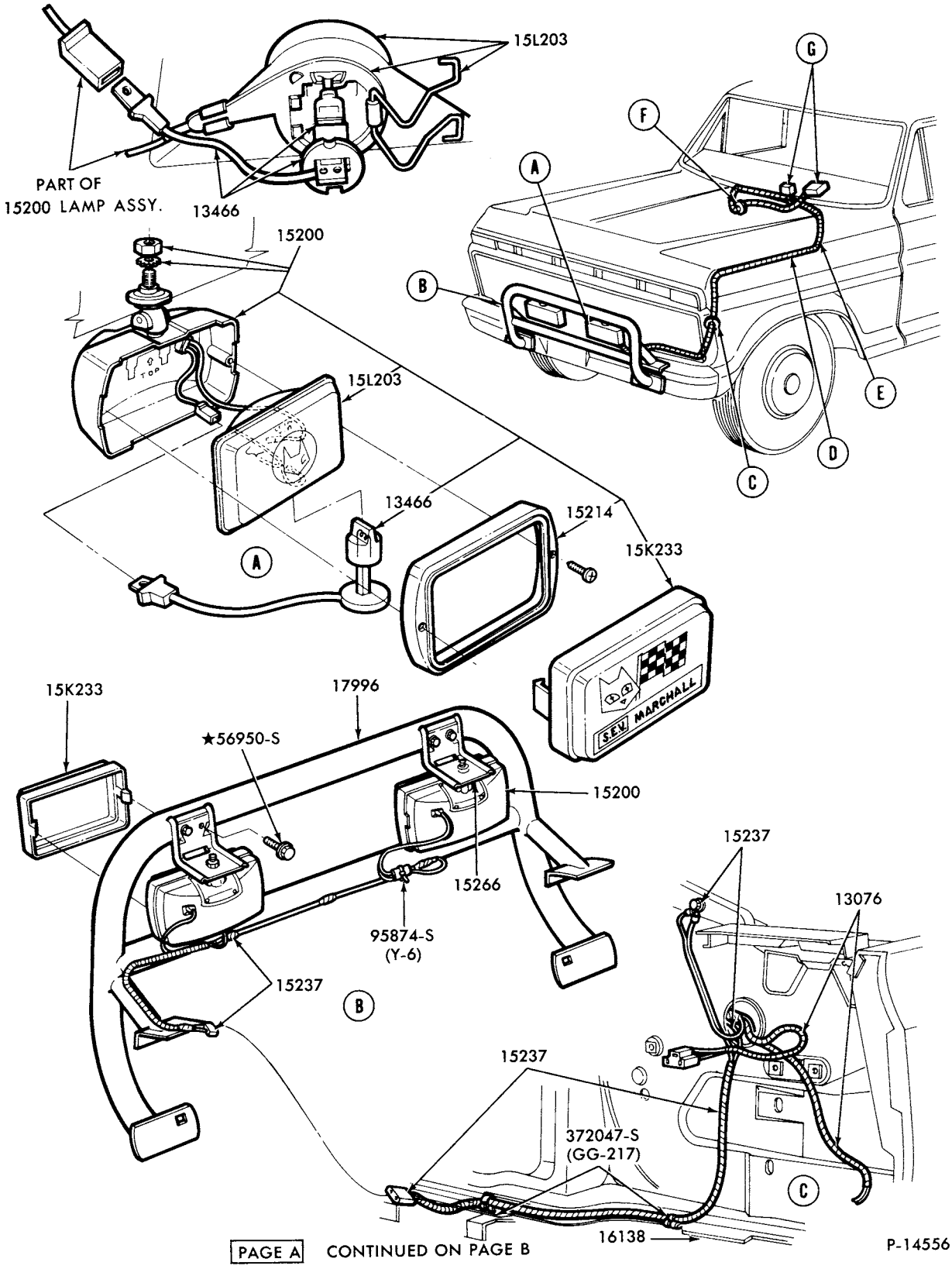

PAGE A CONTINUED ON PAGE B

FOG LAMPS and RELATED PARTS
1978/ F100/350 - PAGE A

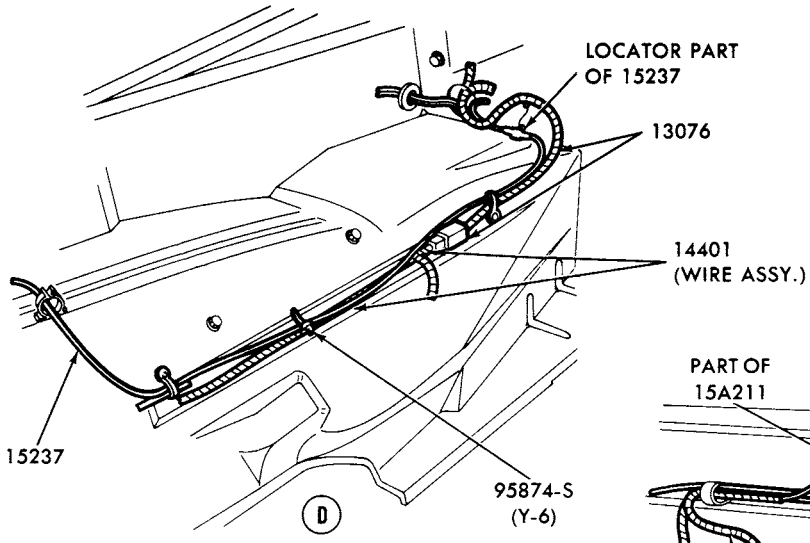

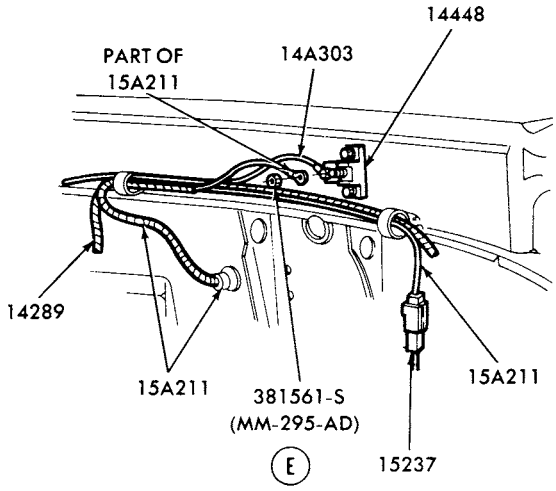

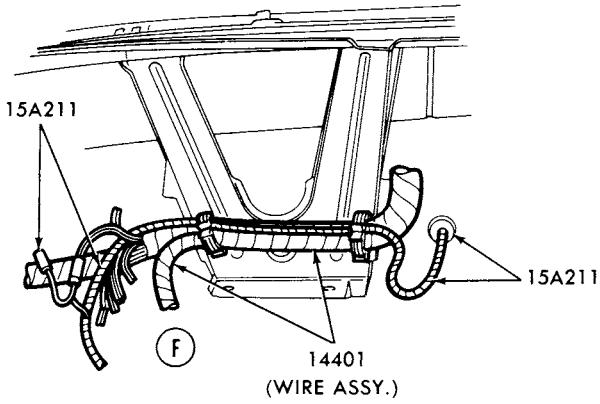

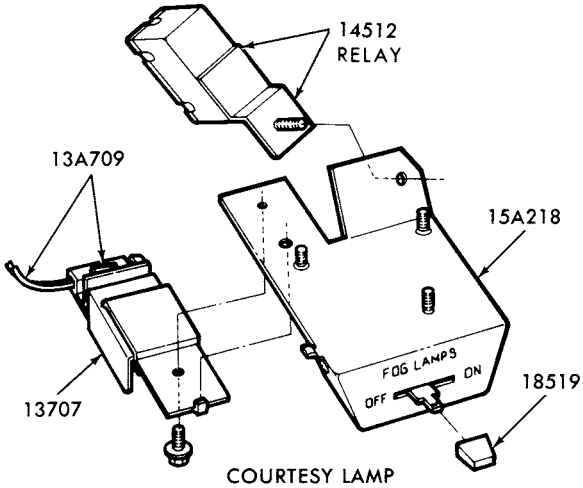

COURTESY LAMP AND FOG LAMP SWITCH ASSY.

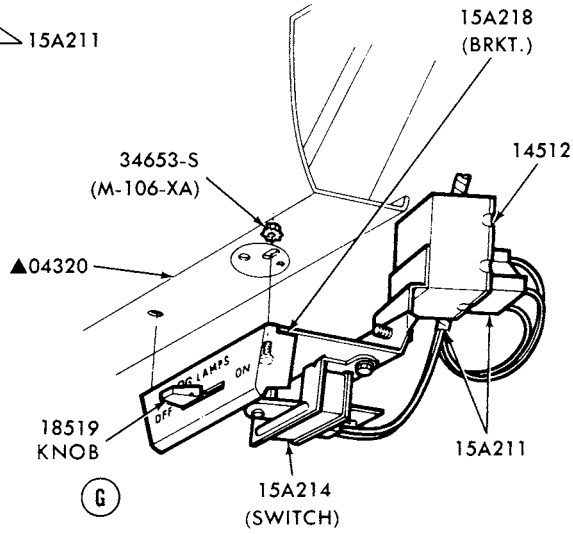

FOG LAMP SWITCH ASSY.

▲ REFER TO GROUP IN BODY SECTION

PAGE B CONTINUED

P-14557

FOG LAMPS and RELATED PARTS
1978/ F100/350 - PAGE B

COPYRIGHT © 1979 FORD MOTOR COMPANY, DEARBORN, MICHIGAN

1973/79 TRUCK SERIES 100/500

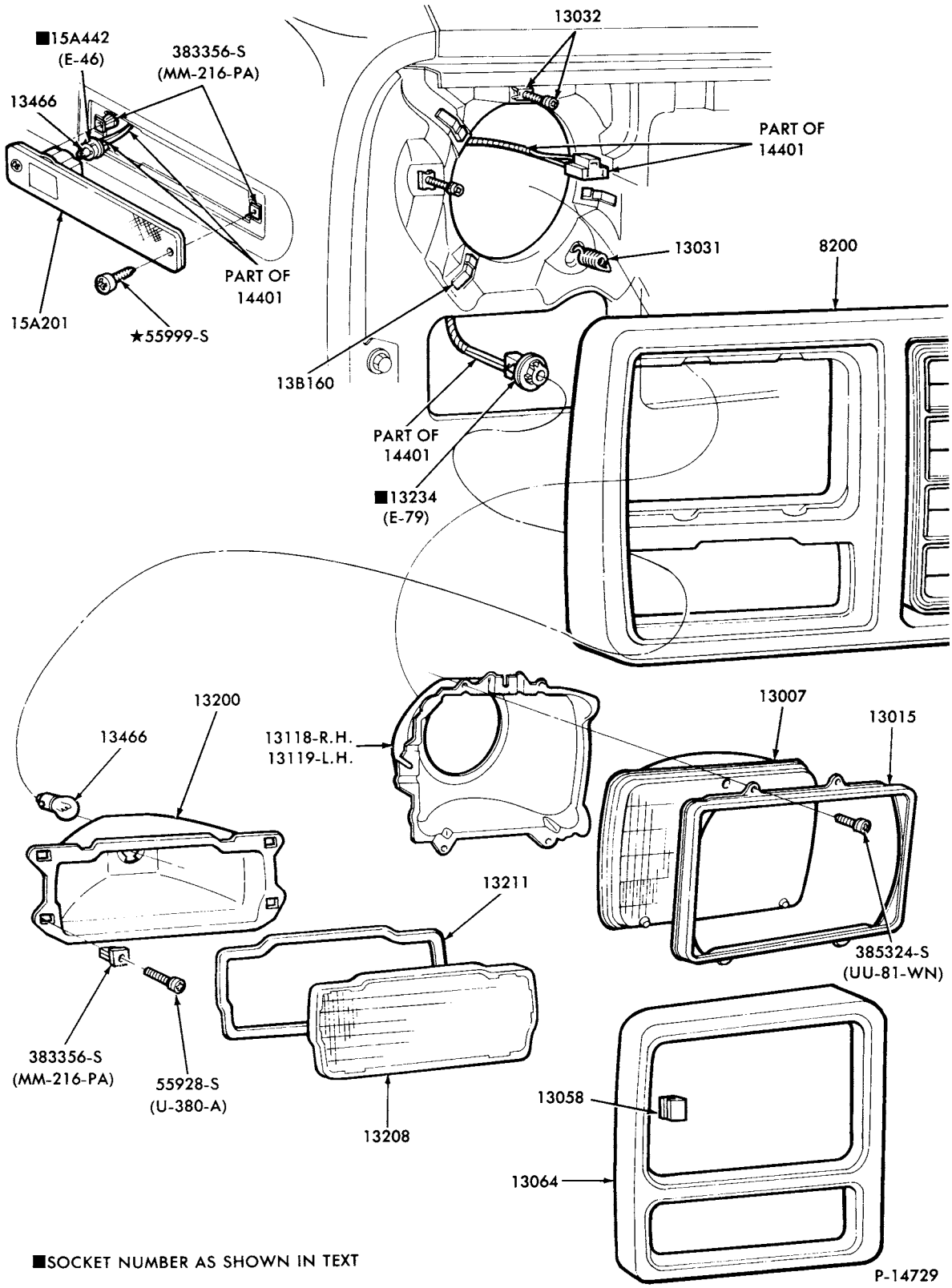

HEADLAMP, PARKING LAMP and MARKER LAMPS
1979 E100/350

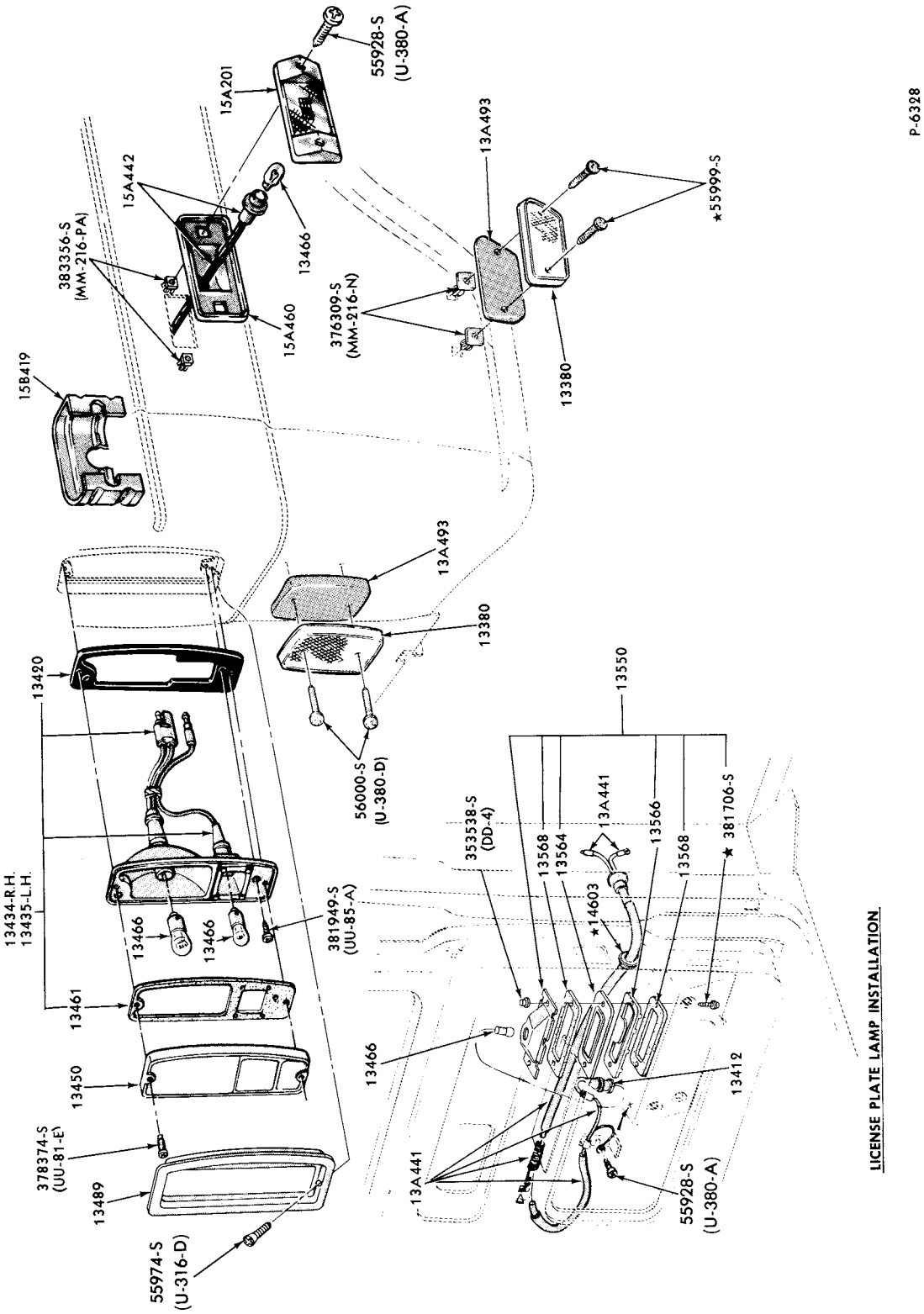

REAR LAMP, BACKUP LAMP, LICENSE PLATE LAMP, REFLECTORS or MARKER LAMPS and RELATED PARTS
1973/74 E100/300

COPYRIGHT © 1979 FORD MOTOR COMPANY, DEARBORN, MICHIGAN

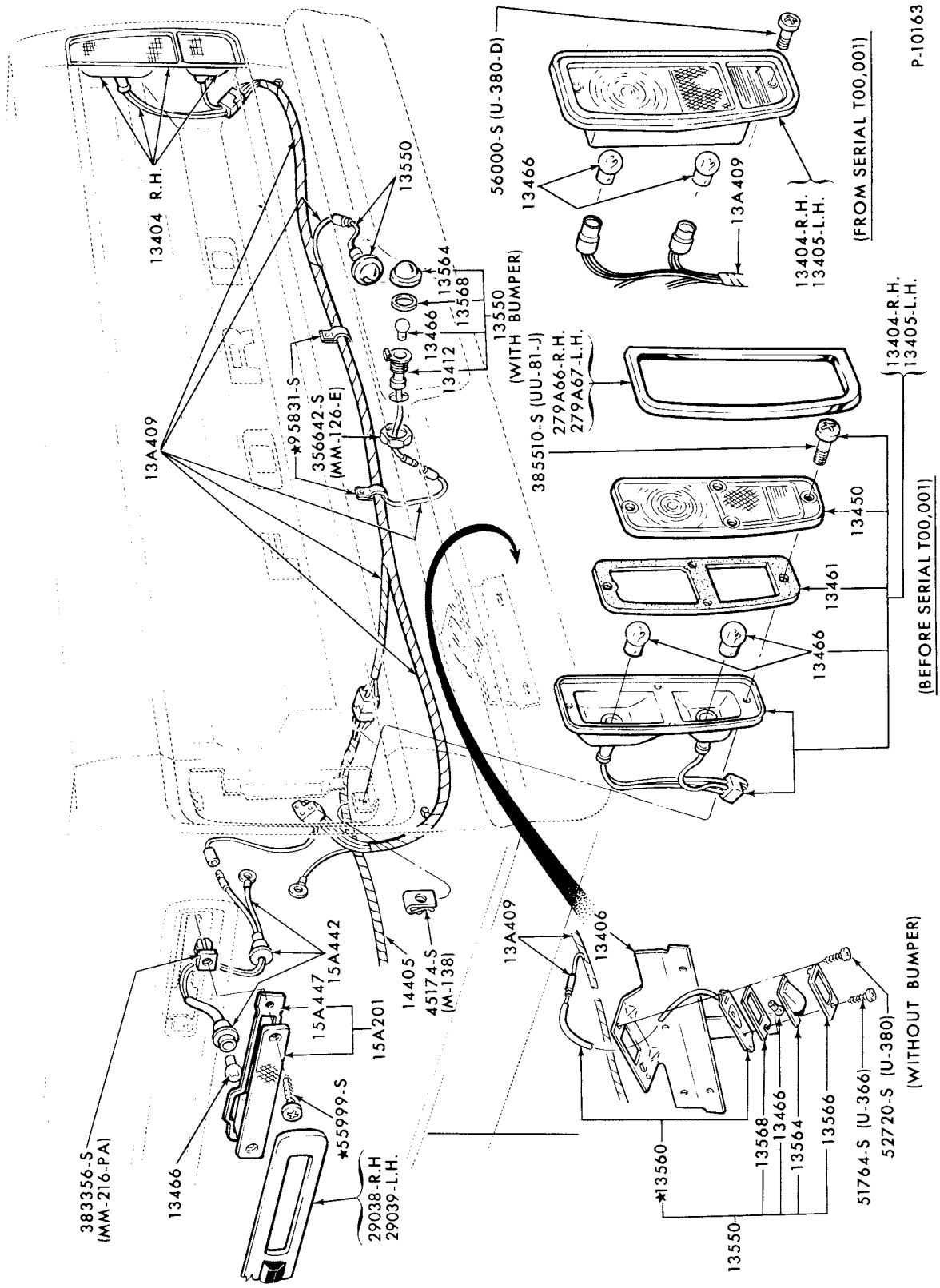

REAR LAMP, MARKER LAMP and LICENSE PLATE LAMP
1973/74 F100/350-BODY TYPE 99

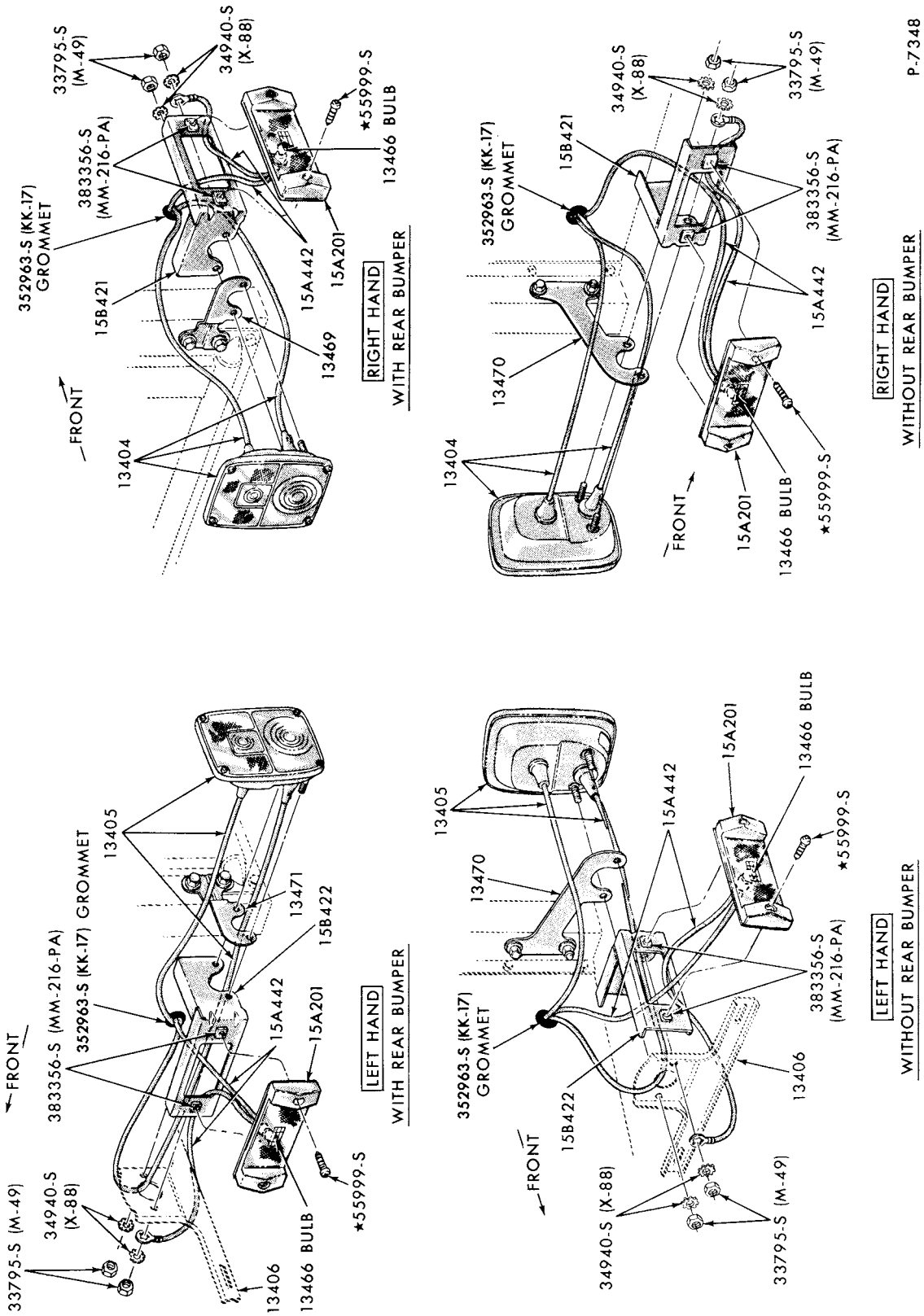

REAR LAMPS, BODY SIDE MARKER LAMPS and RELATED PARTS
1973/75 F100/350-BODY TYPE 83

COPYRIGHT © 1979 — FORD MOTOR COMPANY, DEARBORN, MICHIGAN

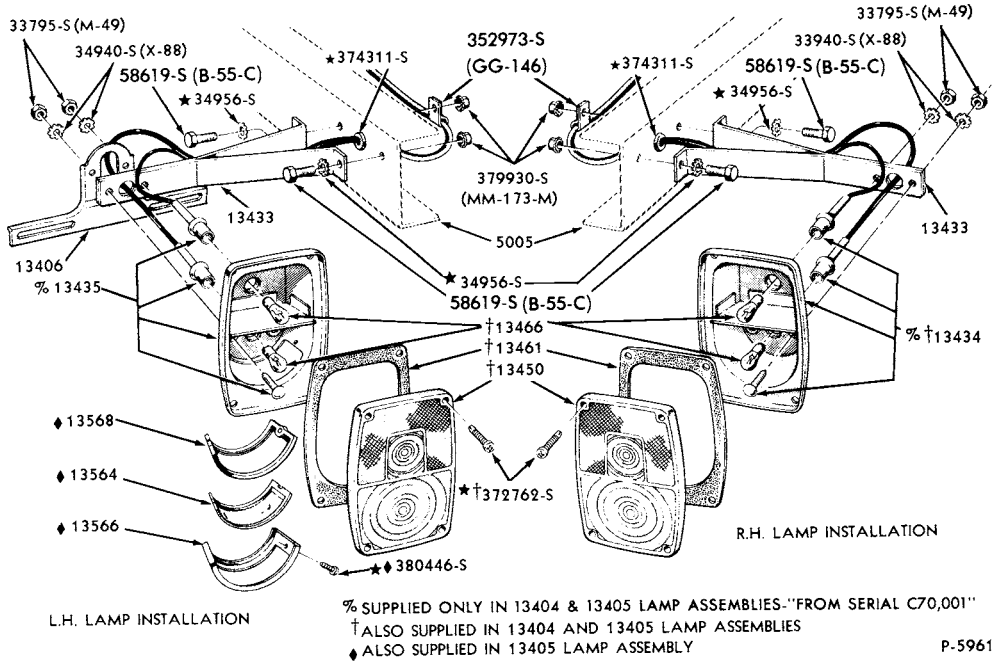

REARLAMP (INCL. LICENSE PLATE LAMP and BACKUP LAMP)-SQUARE TYPE
1973/75 F100/350-EXC. BODY TYPE 99, B-F500 and P350/500

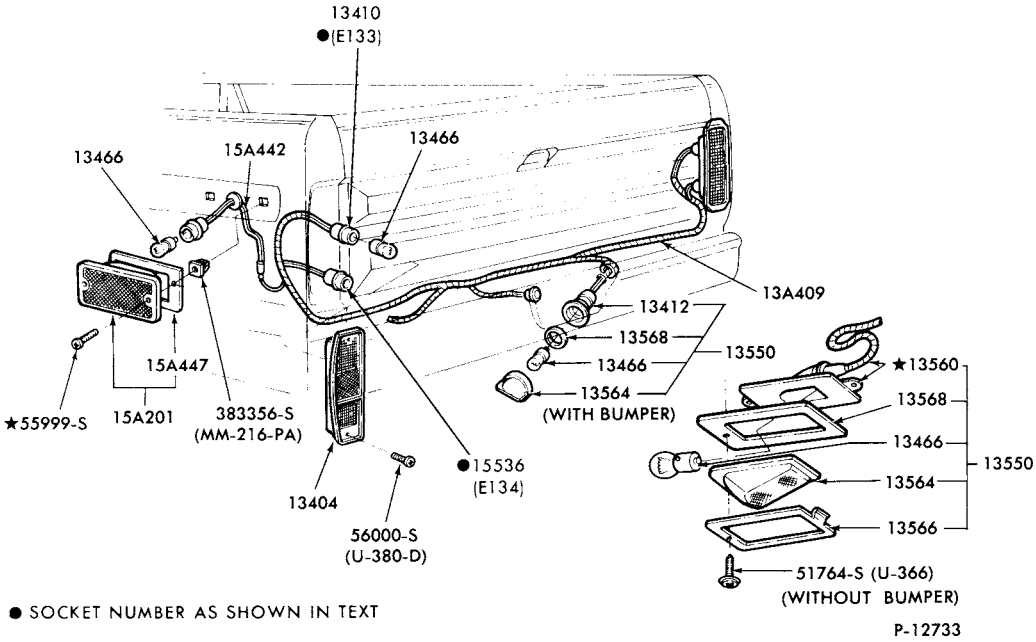

REAR LAMP, SIDE MARKER LAMP and LICENSE PLATE LAMP
1975/ F100/350-BODY TYPE 99

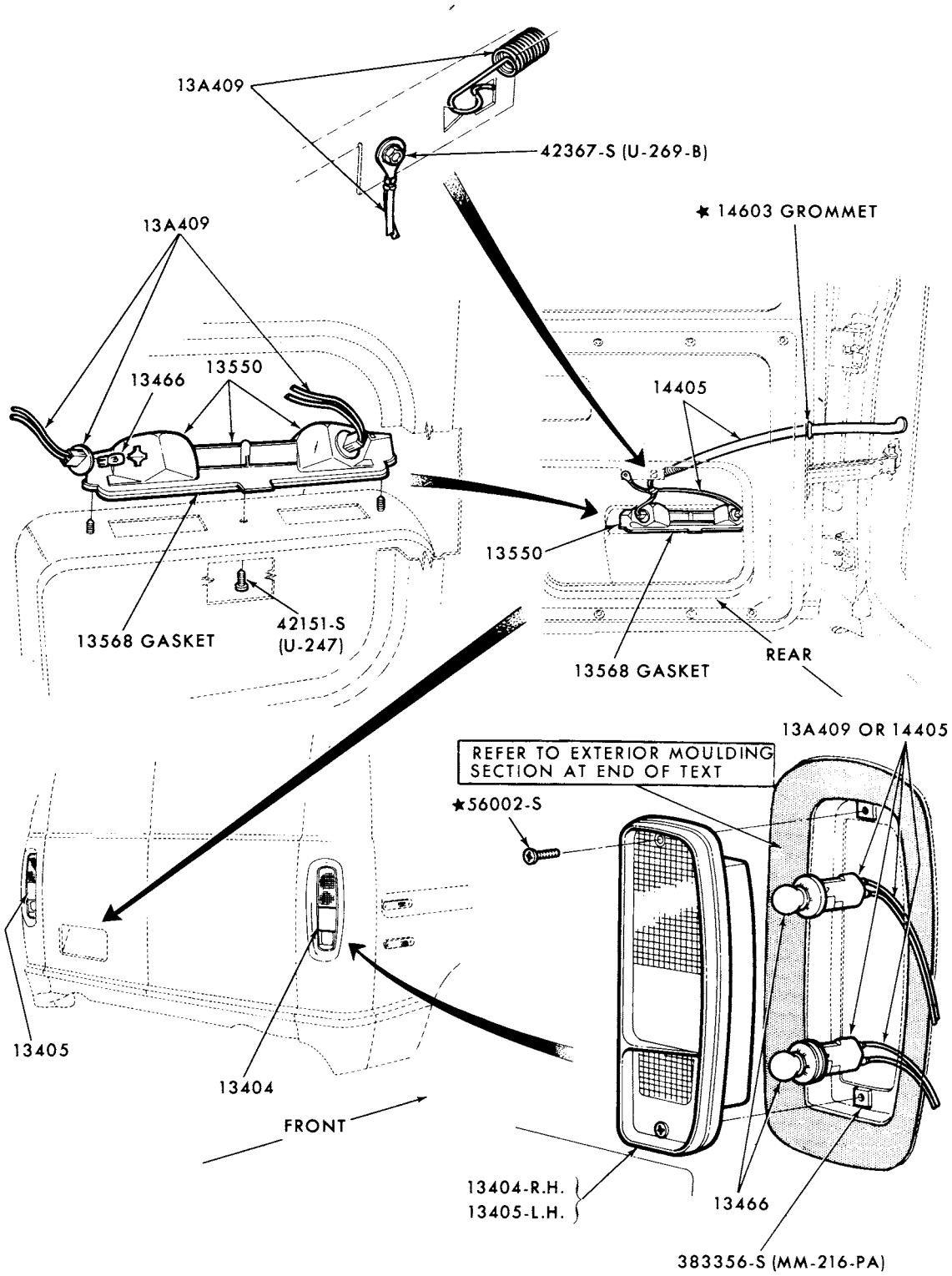

P-11523

REAR LAMP, BACKUP LAMP, LICENSE PLATE LAMP and RELATED PARTS
1975/ E100/350

COPYRIGHT © 1979 FORD MOTOR COMPANY, DEARBORN, MICHIGAN

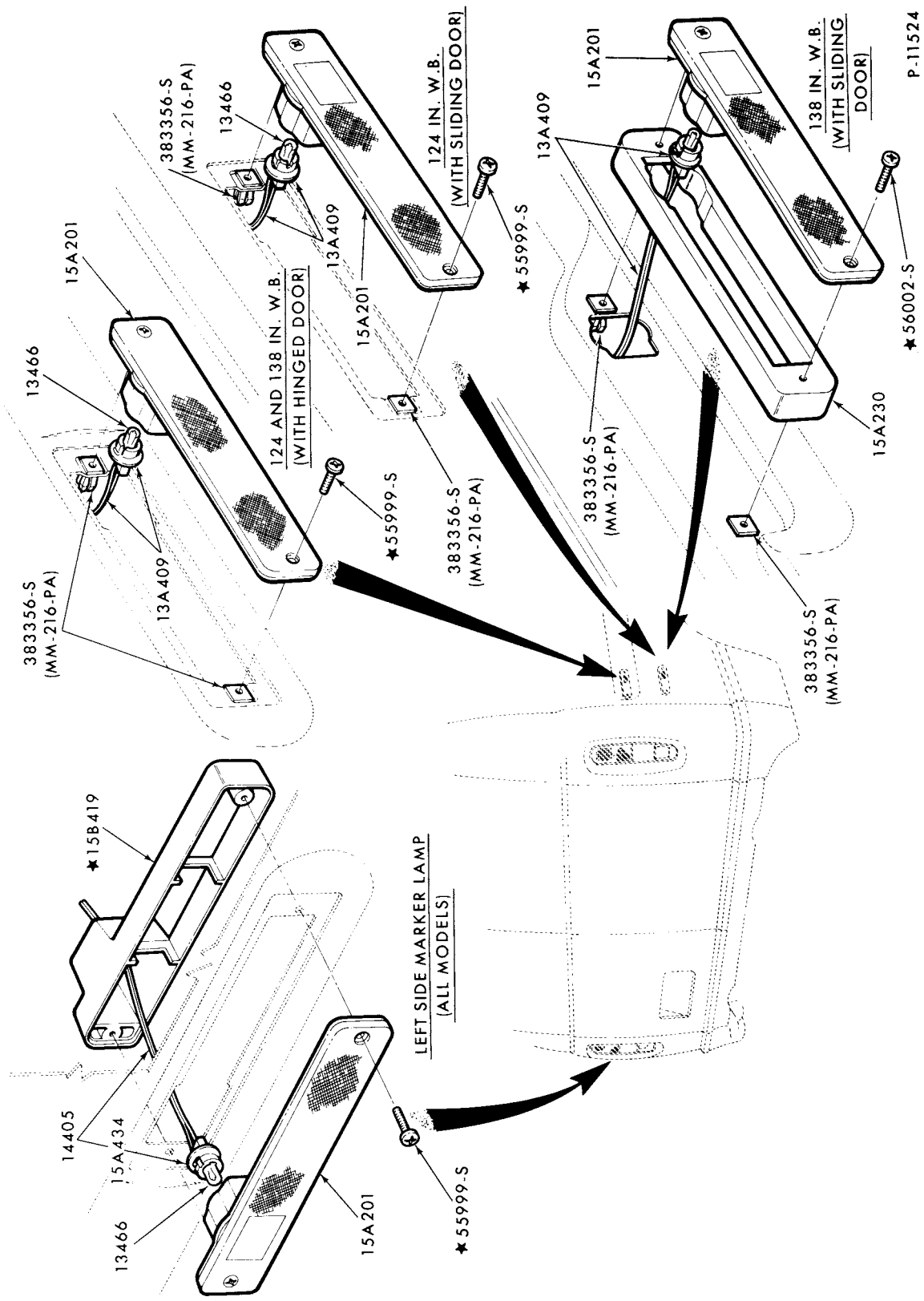

REAR MOUNTED MARKER LAMPS and RELATED PARTS
1975/ E100/350

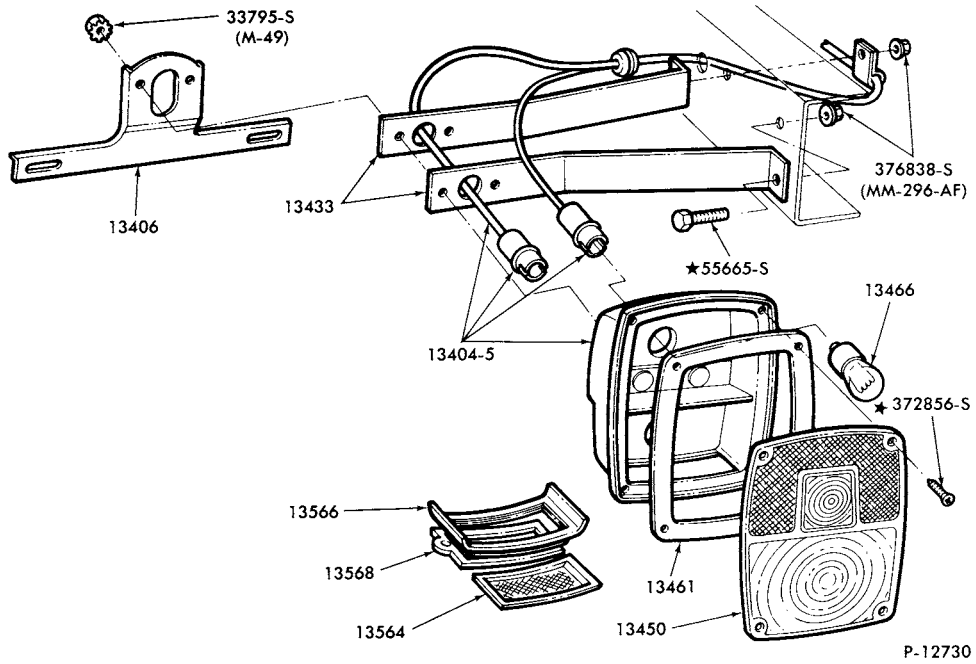

REAR LAMP and SIDE MARKER LAMP (INCL. LICENSE PLATE and BACKUP LAMP)-SQUARE TYPE
1976/ F350 and 1976/77 B-F500-BODY TYPE 80 and 84
1976/77 P350/500

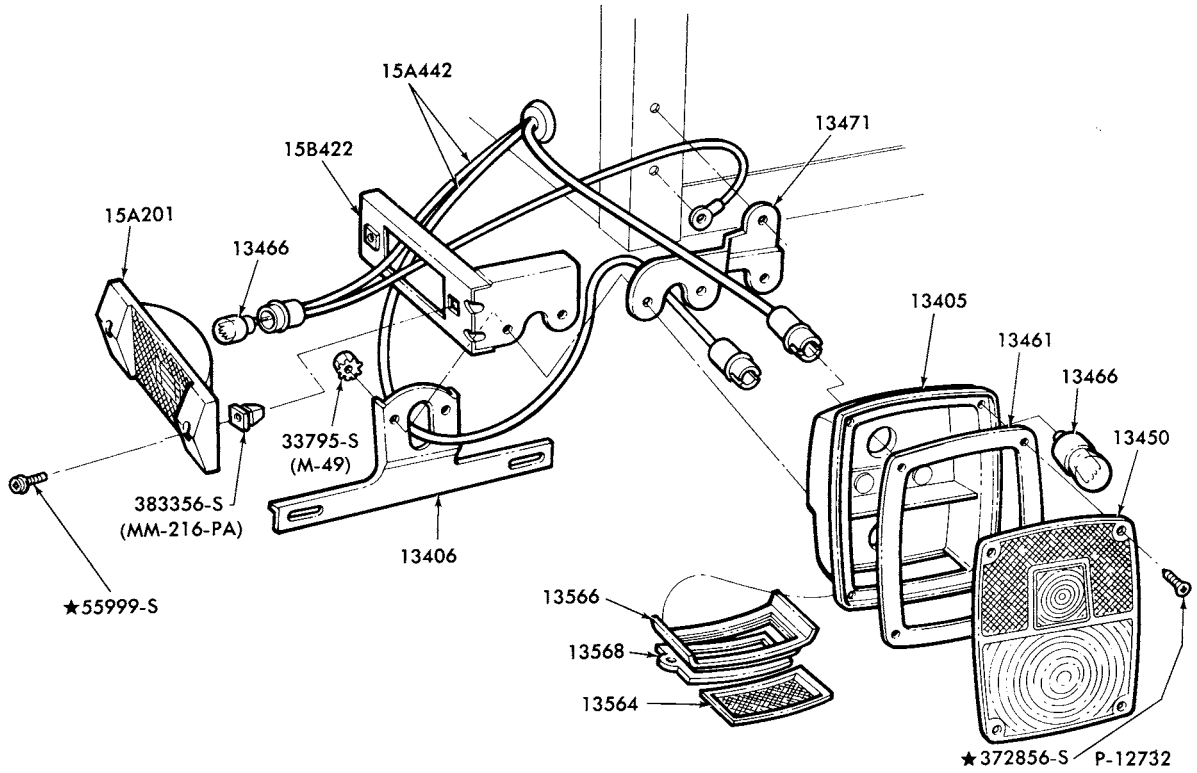

REAR LAMP,BODY SIDE MARKER LAMP and RELATED PARTS
1976/77 F100/250-BODY TYPE 83 - "BEFORE SER. 20,000"

COPYRIGHT © 1979 FORD MOTOR COMPANY DEARBORN, MICHIGAN

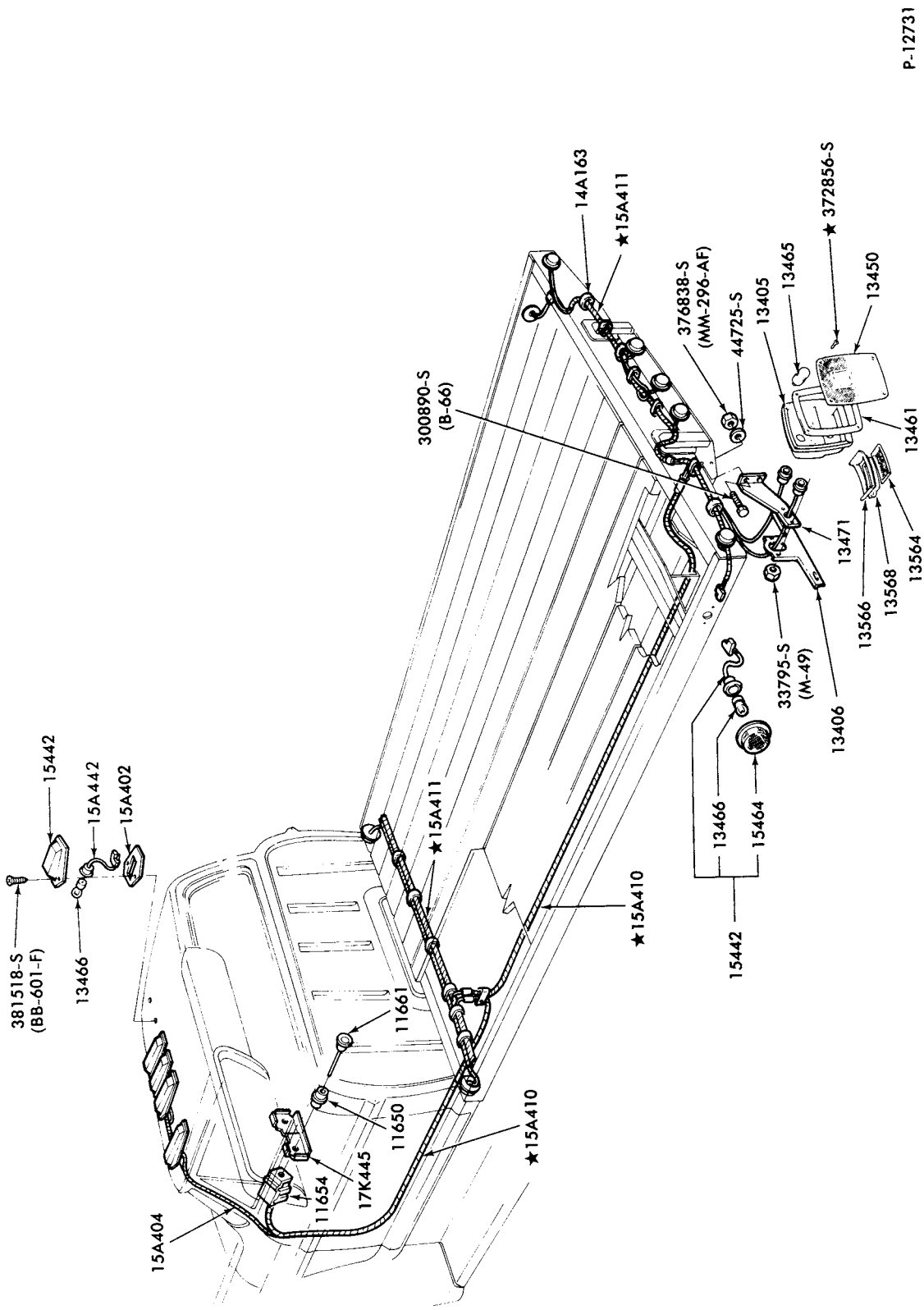

REAR, SIDE and ROOF MARKER LAMPS
1976/ F350-BODY TYPES 80 and 86

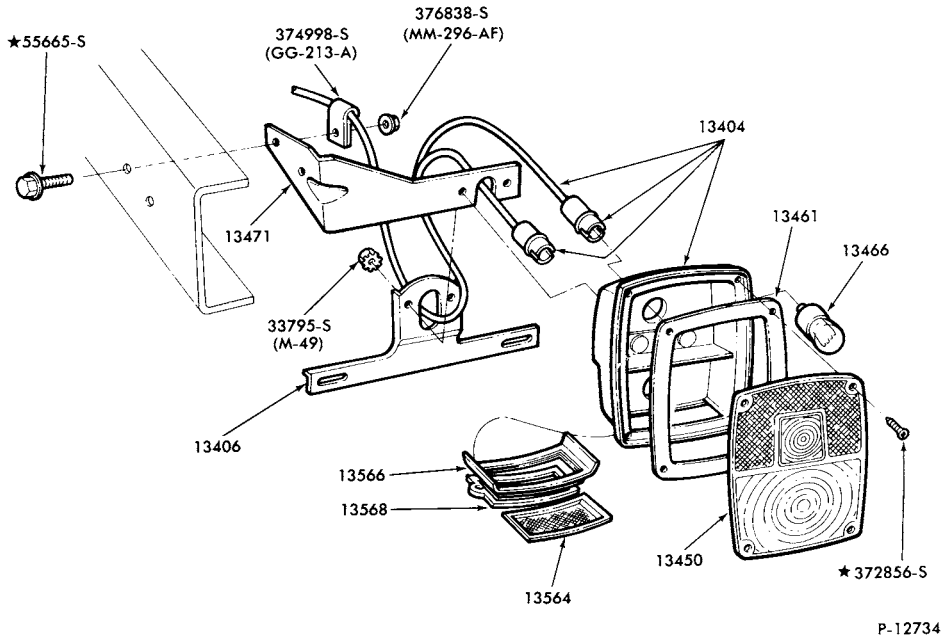

REAR LAMP and SIDE MARKER LAMP
1976/ F100/350-BODY TYPE 81 and 1976/77 F500

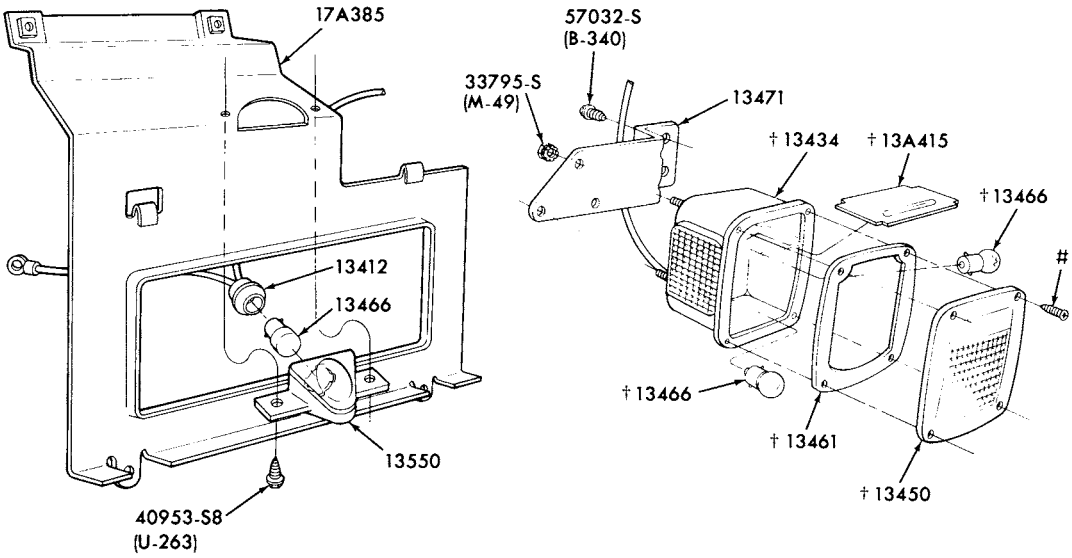

† ALSO SERVICED IN ASSEMBLY - 13404 LAMP
# SERVICED ONLY IN ASSEMBLY - 13404 LAMP

P-13271

REAR LAMP, LICENSE LAMP and RELATED PARTS
1977/ F100/250-BODY TYPE 83 - "FROM SER. 20,000"

COPYRIGHT © 1979 FORD MOTOR COMPANY—DEARBORN, MICHIGAN

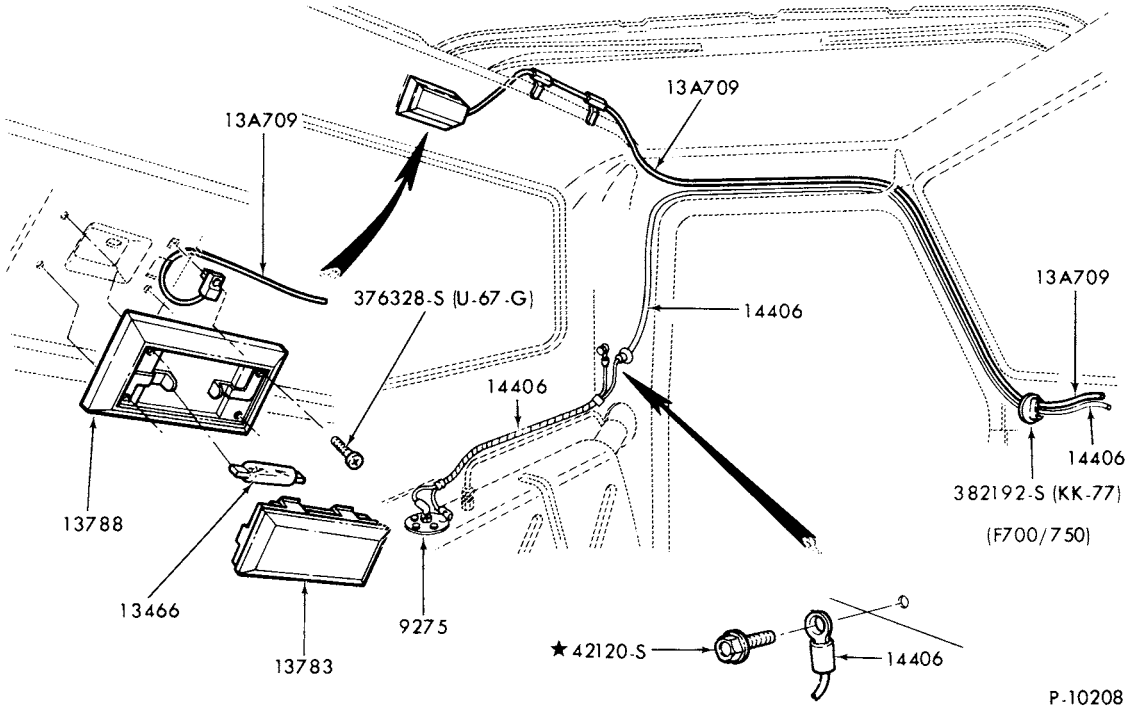

DOME LAMP and RELATED PARTS
1973/ F100/350 and 1973/77 F500

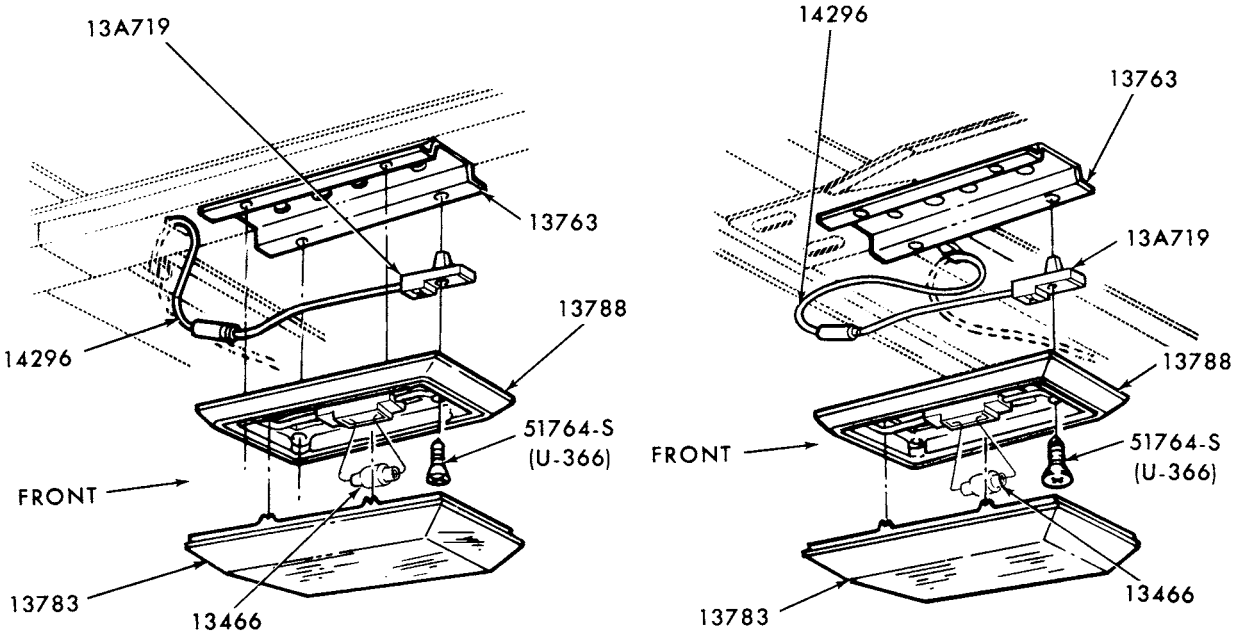

DOME and CARGO LAMP
1973/74 E100/300

COPYRIGHT © 1979 -- FORD MOTOR COMPANY - DEARBORN, MICHIGAN

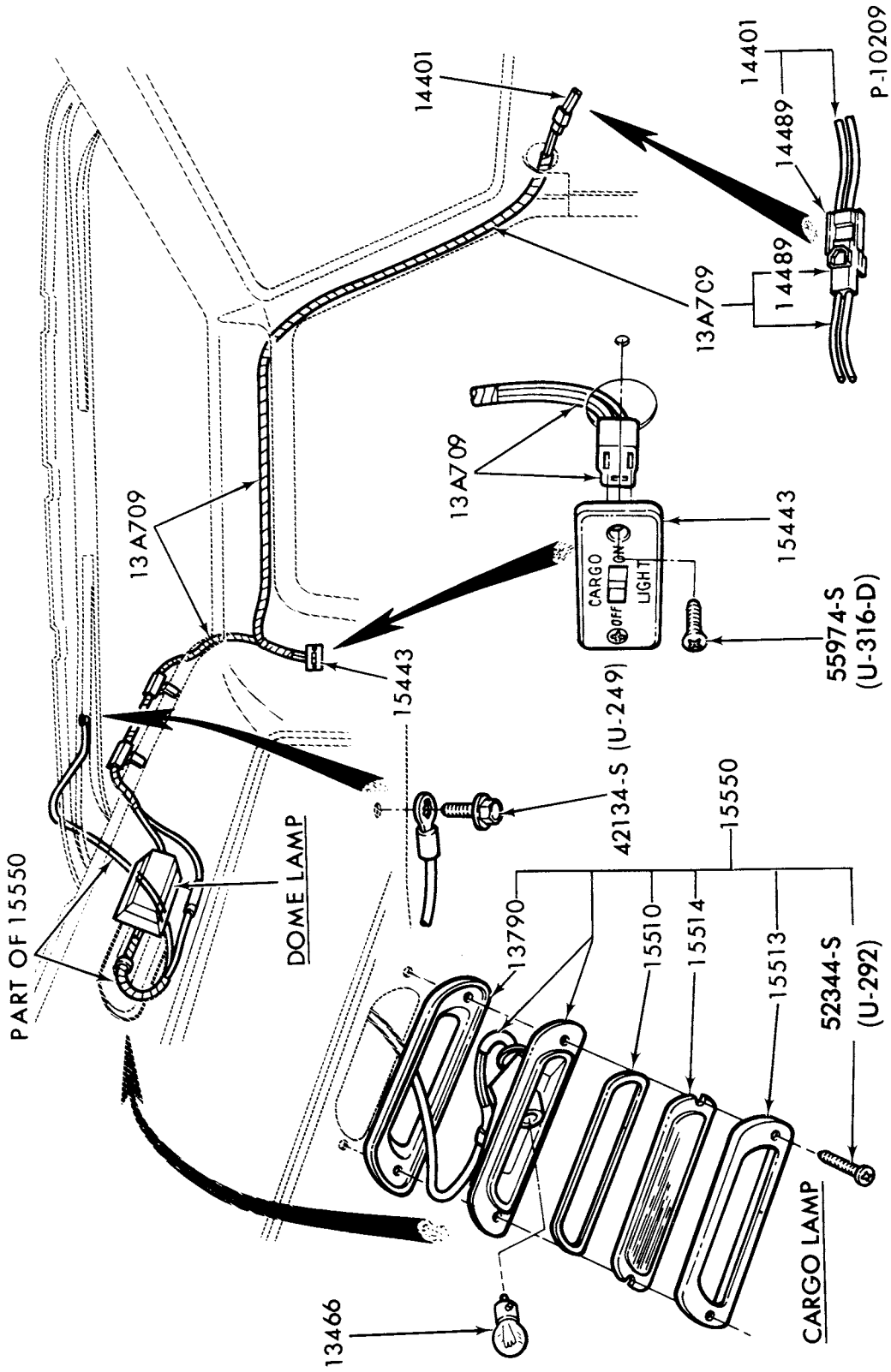

CARGO LAMP and RELATED PARTS
1973/77 F100/350

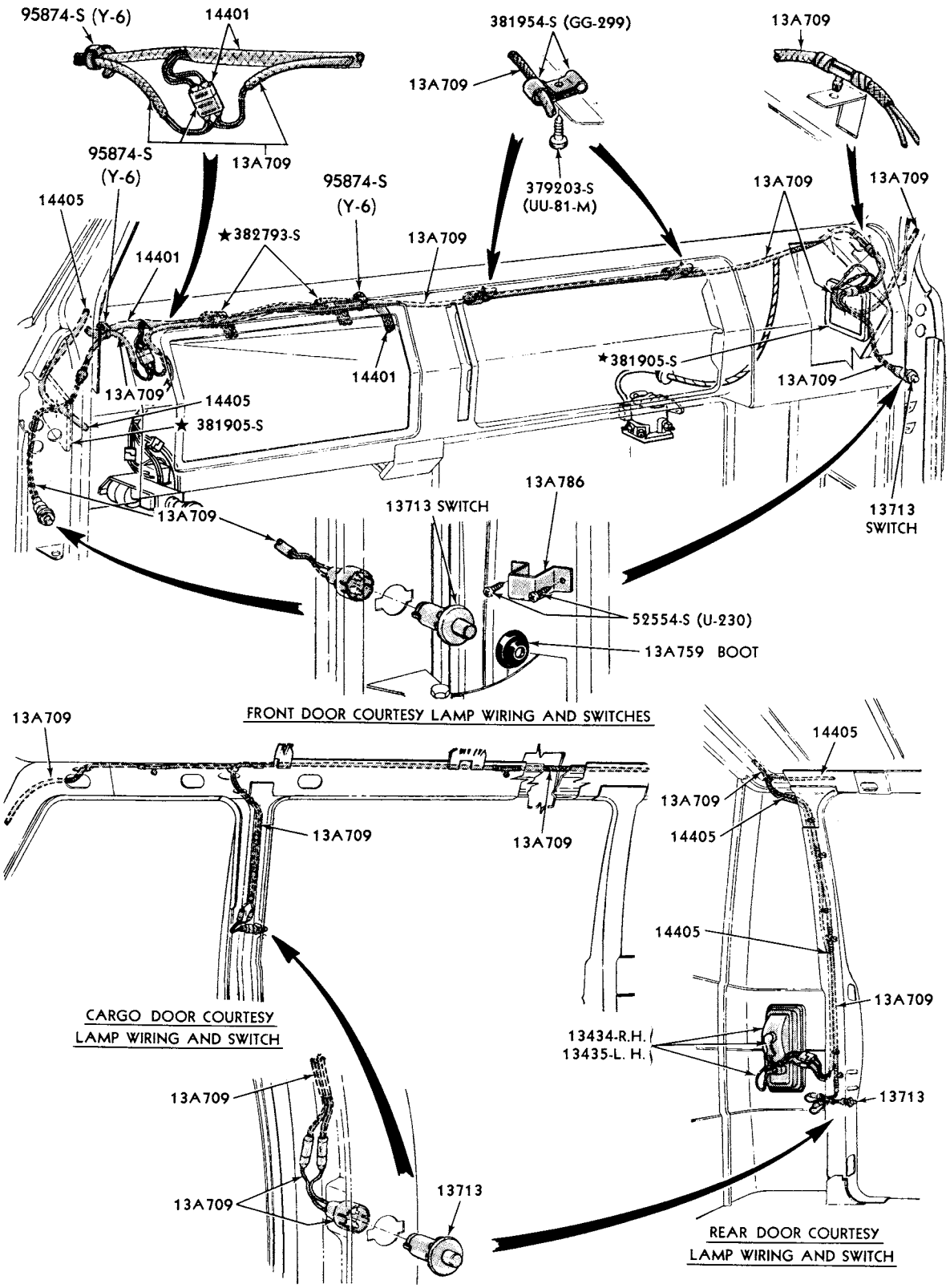

COURTESY LAMP WIRING, SWITCHES and RELATED PARTS-TYPICAL
1973/ E100/350

COPYRIGHT © 1979 -- FORD MOTOR COMPANY, DEARBORN, MICHIGAN

P-6468

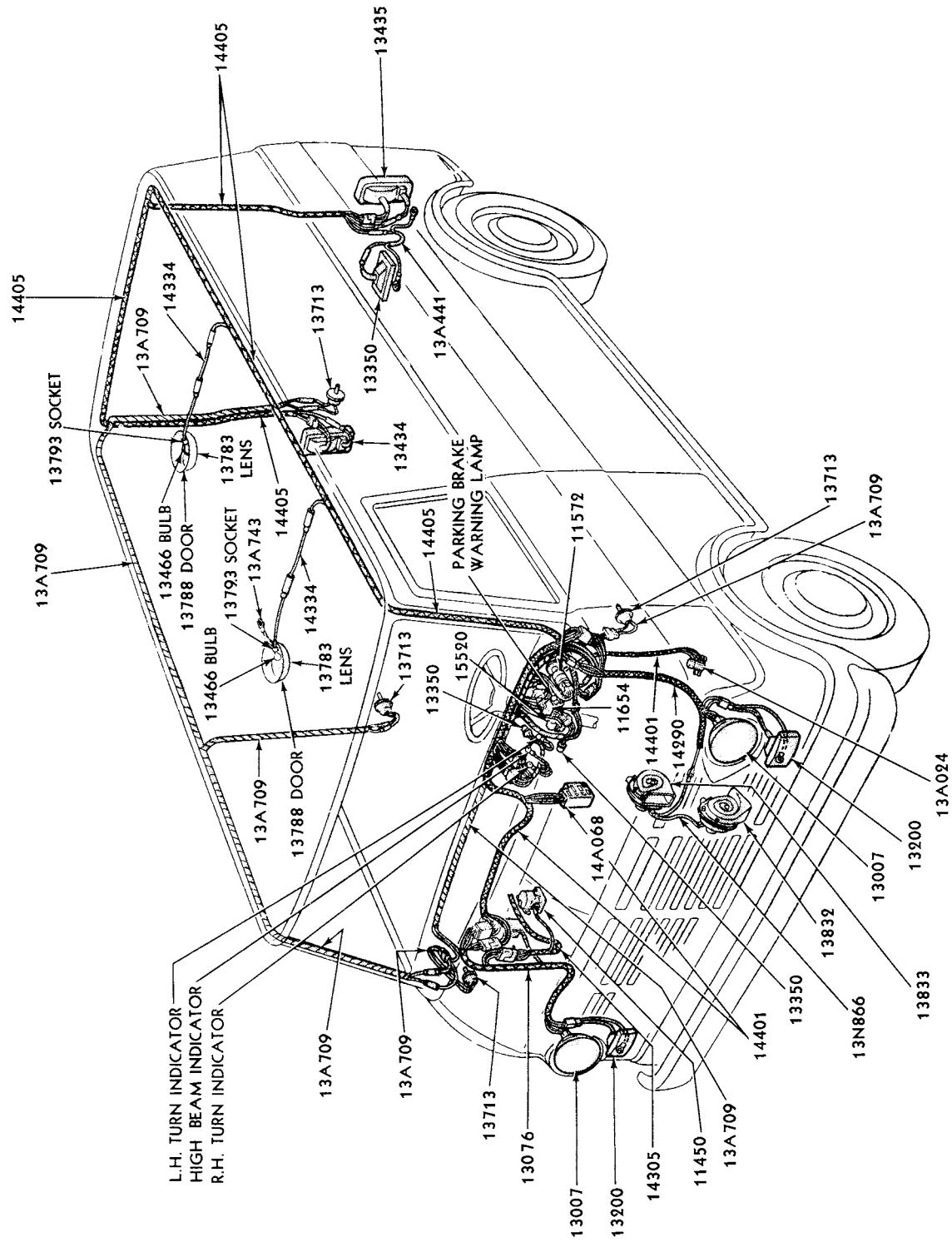

WIRING SYSTEM-INTERIOR and EXTERIOR LAMPS-TYPICAL
1973/ E100/350

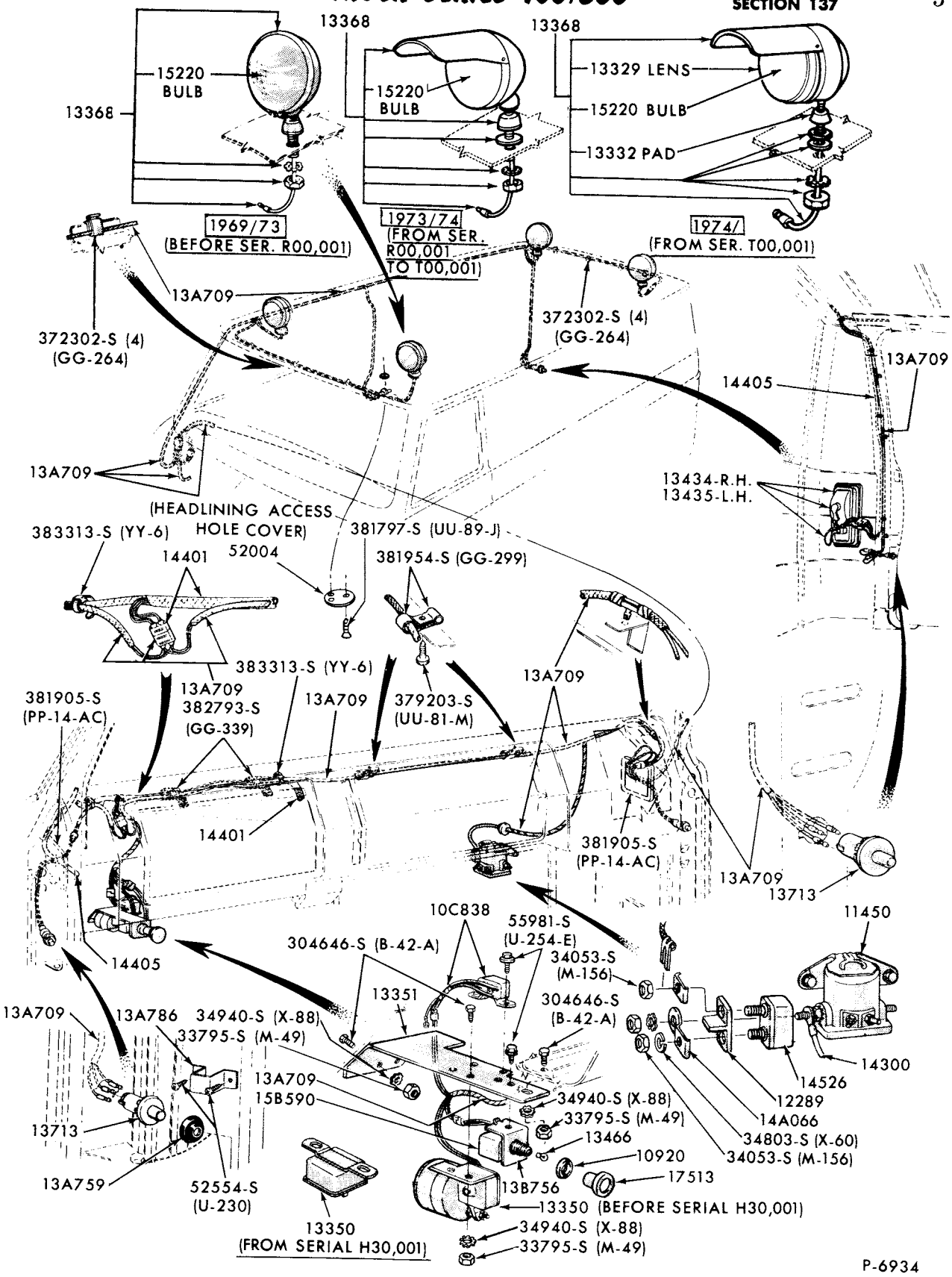

WARNING LAMPS, WIRING and RELATED PARTS (SCHOOL BUS-ROOF MOUNTED)-TYPICAL
1973/76 E150/350 (82, 89E and F)

COPYRIGHT © 1979— FORD MOTOR COMPANY DEARBORN, MICHIGAN

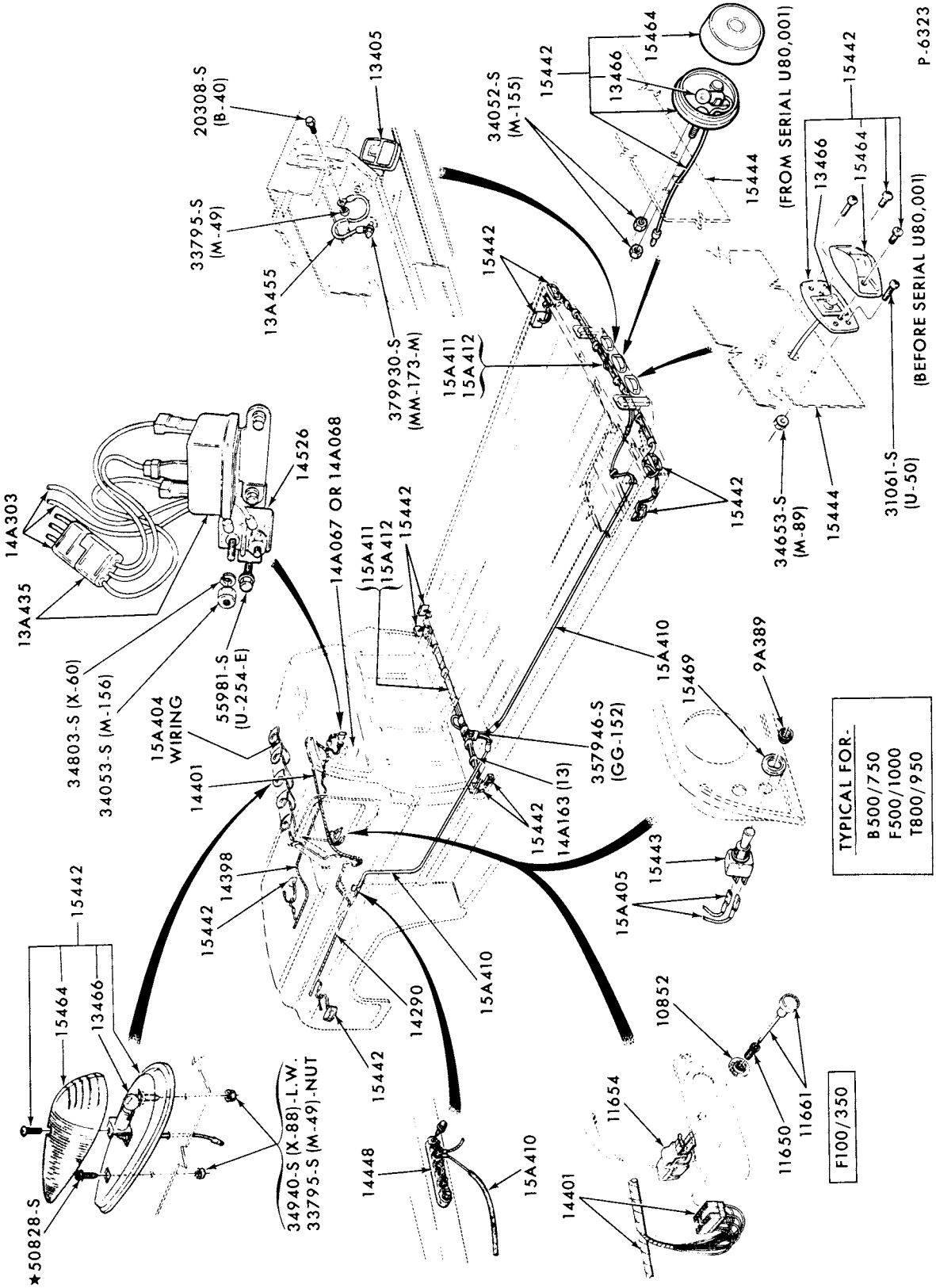

MARKER LAMPS (ROOF MOUNTED, FENDER and BED MOUNTED CLEARANCE)-TYPICAL
1973/ F100/350 and 1973/77 B-F500

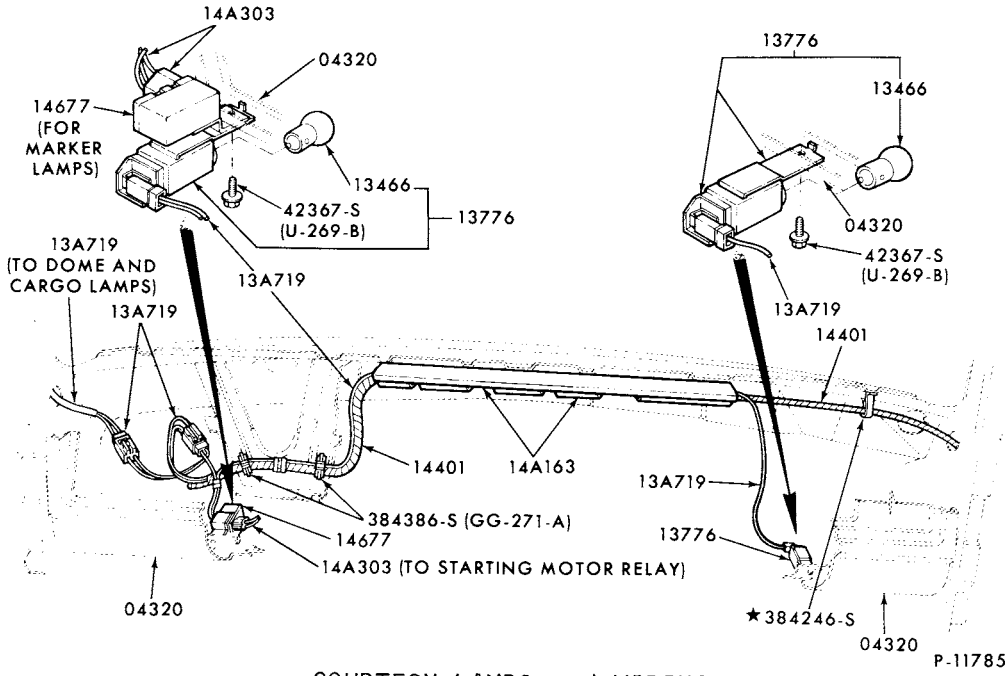

COURTESY LAMPS and WIRING
1974/ F100/350

COPYRIGHT © 1979 FORD MOTOR COMPANY—DEARBORN, MICHIGAN

1973/79
TRUCK SERIES 100/500

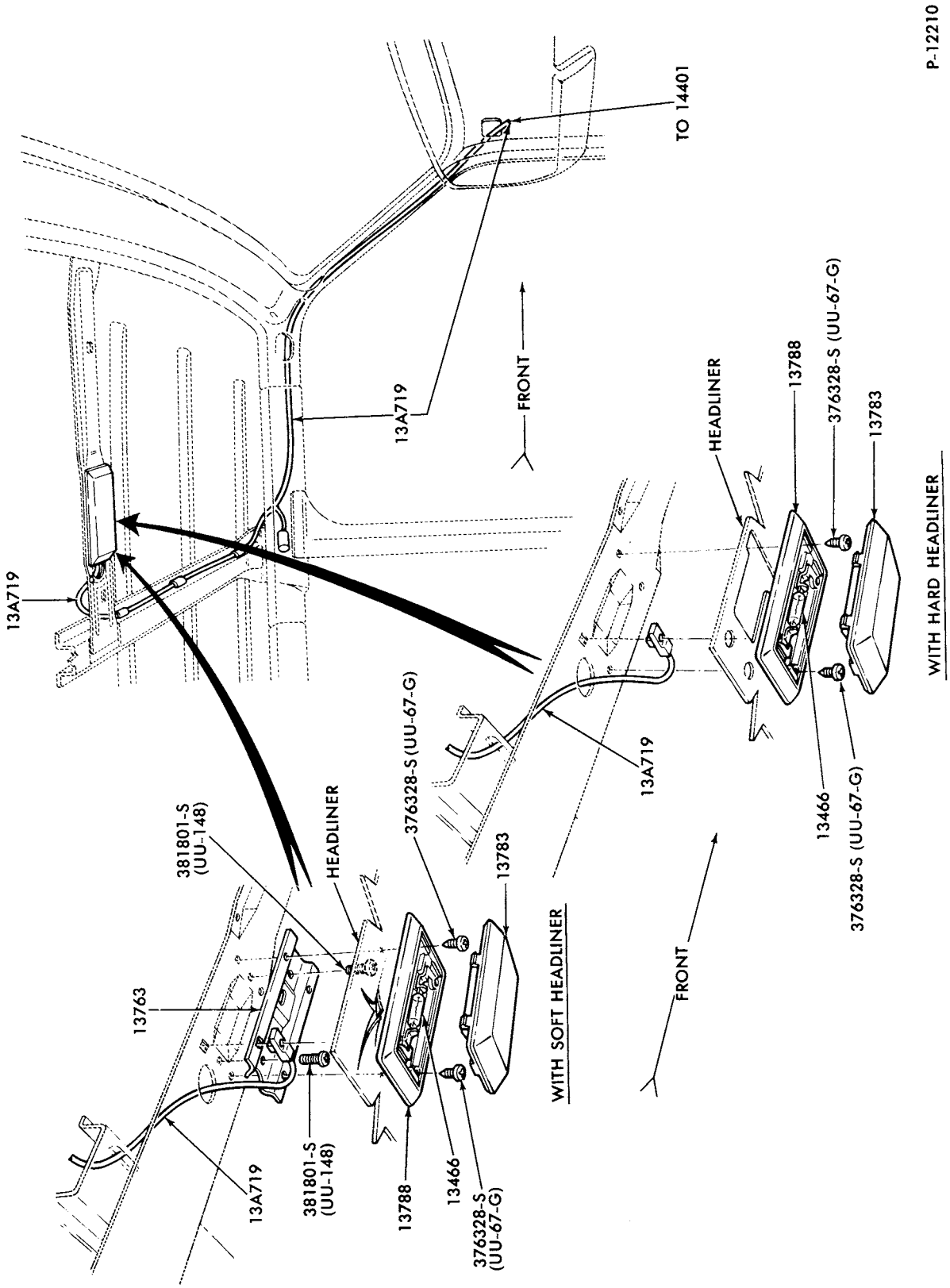

DOME and CARGO LAMPS
1975/ E100/350

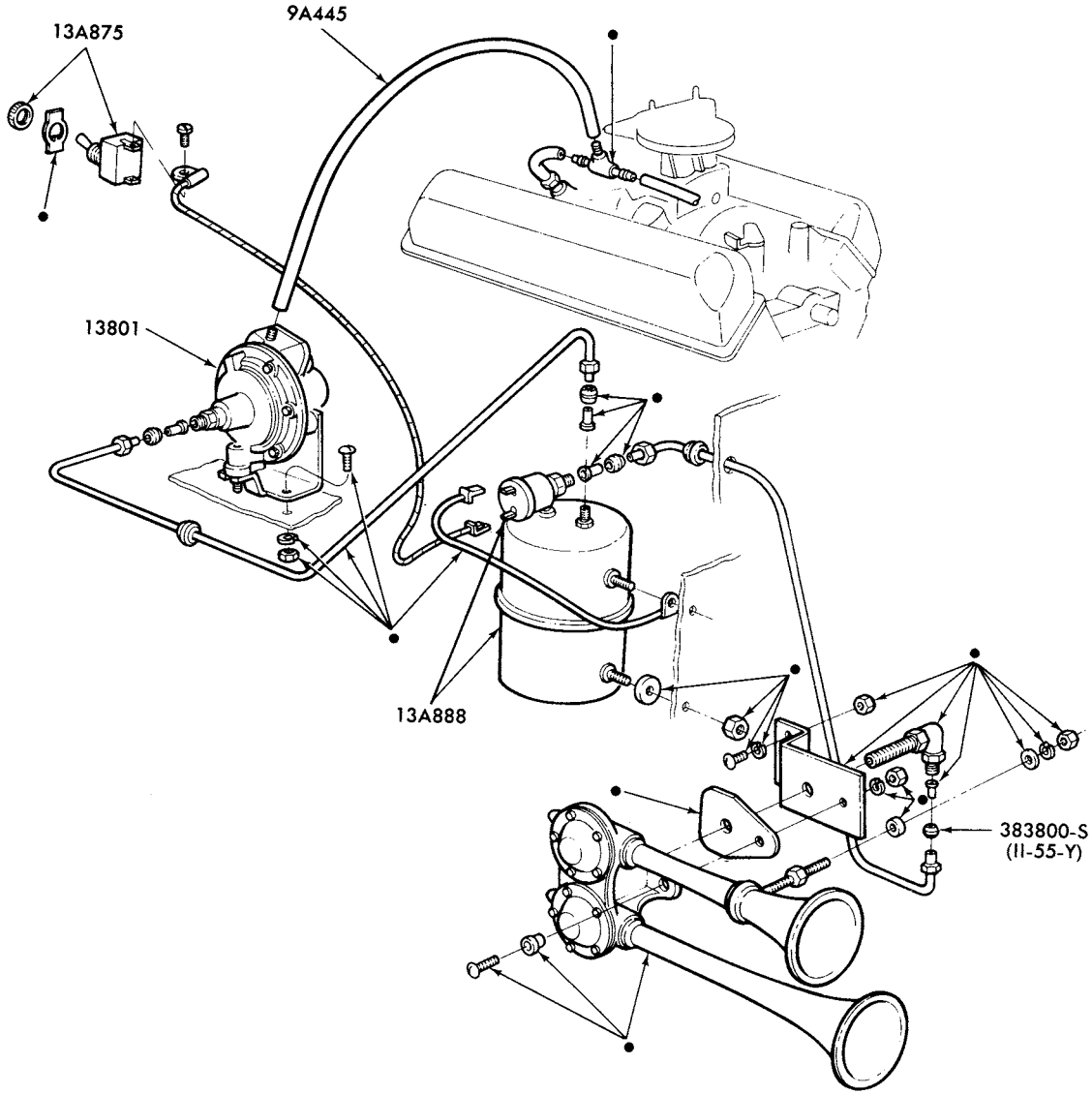

•SERVICED ONLY IN KIT-GROUP 13800

P-12925

AIR HORN INSTALLATION
1973/ ALL MODELS

COPYRIGHT © 1980 FORD MOTOR COMPANY, DEARBORN, MICHIGAN

WIRE TERMINALS

SHEARS BOLTS
CRIMPS TERMINALS
STRIPS AND
CUTS WIRE

Illustrated here are high quality terminals and connectors containing these special features:

Color coded for easy identification

Expanded insulated sleeves for easy application

Wire stops to eliminate error

Tin plated electrolytic copper for corrosion resistance

Plastic insulation eliminates taping

Serrated metal inside terminals

Bell mouth terminals and connectors for easy wire insertion

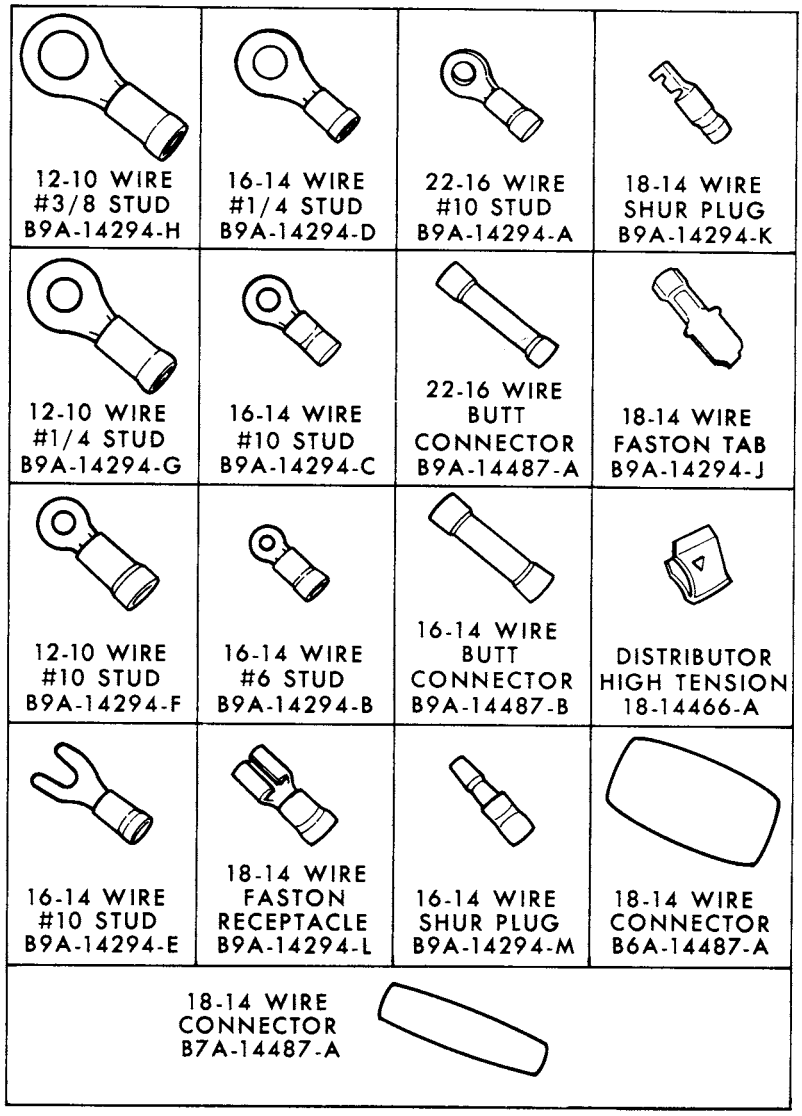

CRIMPING TOOL
B9A-17018-A

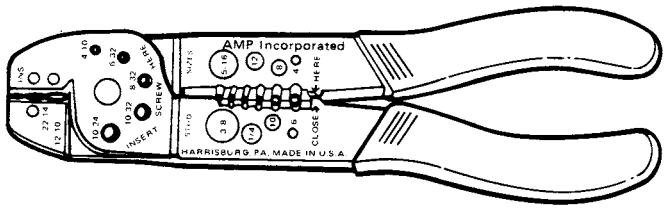

COLOR CODE

22-16 WIRE SIZE
RED

16-14 WIRE SIZE
BLUE

12-10 WIRE SIZE
YELLOW

P-3194

ELECTRICAL WIRE TERMINALS
1973/ ALL MODELS

COPYRIGHT © 1979—FORD MOTOR—DEARBORN, MICHIGAN
COMPANY

1973/79 TRUCK SERIES 100/500

WIRE CONNECTOR SLEEVE KIT C4AZ 14294-A

10 CIRCUIT PIN TERMINAL SLEEVE 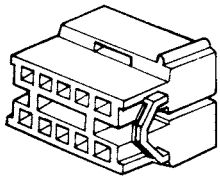 C5SZ 14489-B	10 CIRCUIT SOCKET TERMINAL SLEEVE 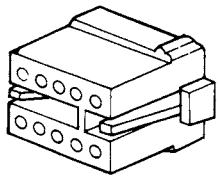 C5SZ 14489-A	8 CIRCUIT PIN TERMINAL SLEEVE 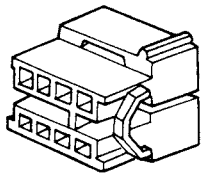 C4AZ 14489-F	8 CIRCUIT SOCKET TERMINAL SLEEVE 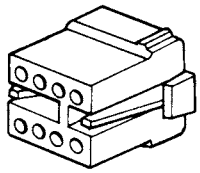 C4AZ 14489-E
6 & 4 CIRCUIT PIN TERMINAL SLEEVE 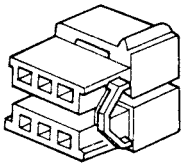 C5AZ 14489-H	6 & 4 CIRCUIT SOCKET TERMINAL SLEEVE 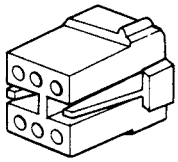 C5AZ 14489-G	2 CIRCUIT PIN TERMINAL SLEEVE 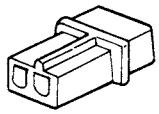 C5AZ 14489-E	2 CIRCUIT SOCKET TERMINAL SLEEVE 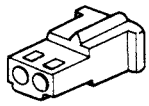 C5AZ14489-F
SINGLE CIRCUIT PIN TERMINAL SLEEVE 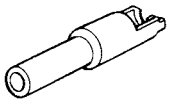 C6AZ 14A309-B	SINGLE CIRCUIT SOCKET TERMINAL SLEEVE 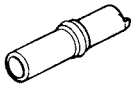 C6AZ 14A309-A	SOCKET TERMINAL C4AZ 14488-A	SOCKET TERMINAL 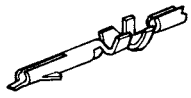 C4AZ 14488-B
PIN TERMINAL 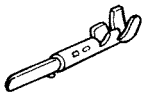 C4AZ 14461-A	TERMINAL EXTRACTION TOOL 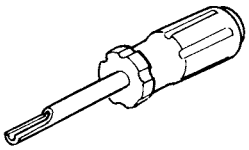 C4AZ 17018-B		

CRIMPING TOOL
% C4AZ 17018-A

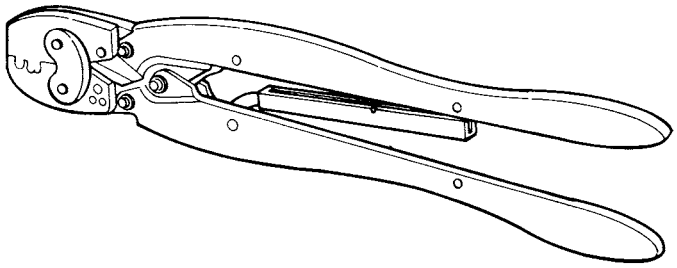

% NOT SUPPLIED IN C4AZ 14294-A KIT ORDER SEPARATELY

P-5344

WIRE CONNECTION SLEEVE KIT and CRIMPING TOOL
1973/ ALL MODELS

P-6469

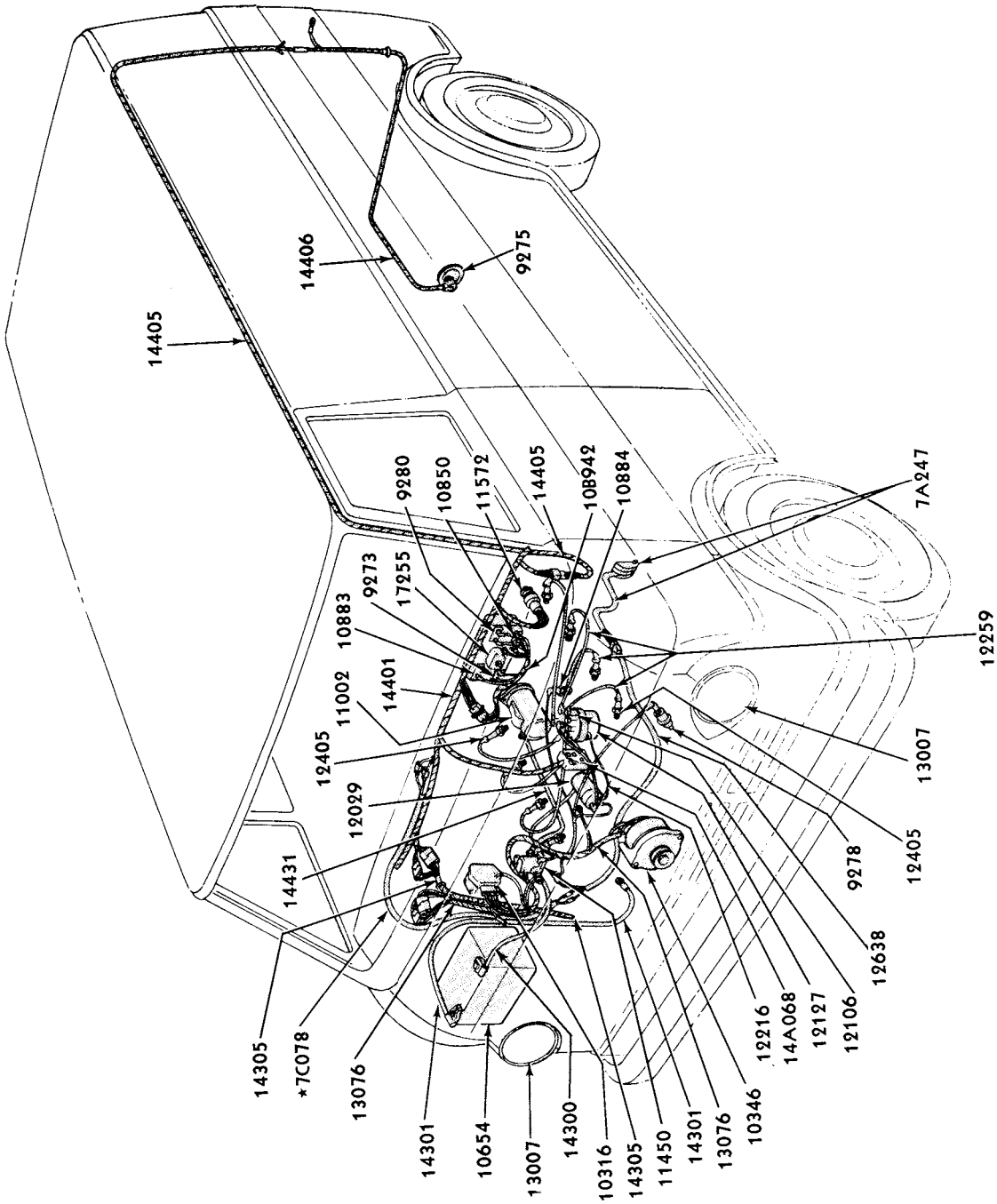

WIRING SYSTEM-TYPICAL
1973/ E100/350

COPYRIGHT © 1979 — FORD MOTOR COMPANY, DEARBORN, MICHIGAN

1973/79 TRUCK SERIES 100/500

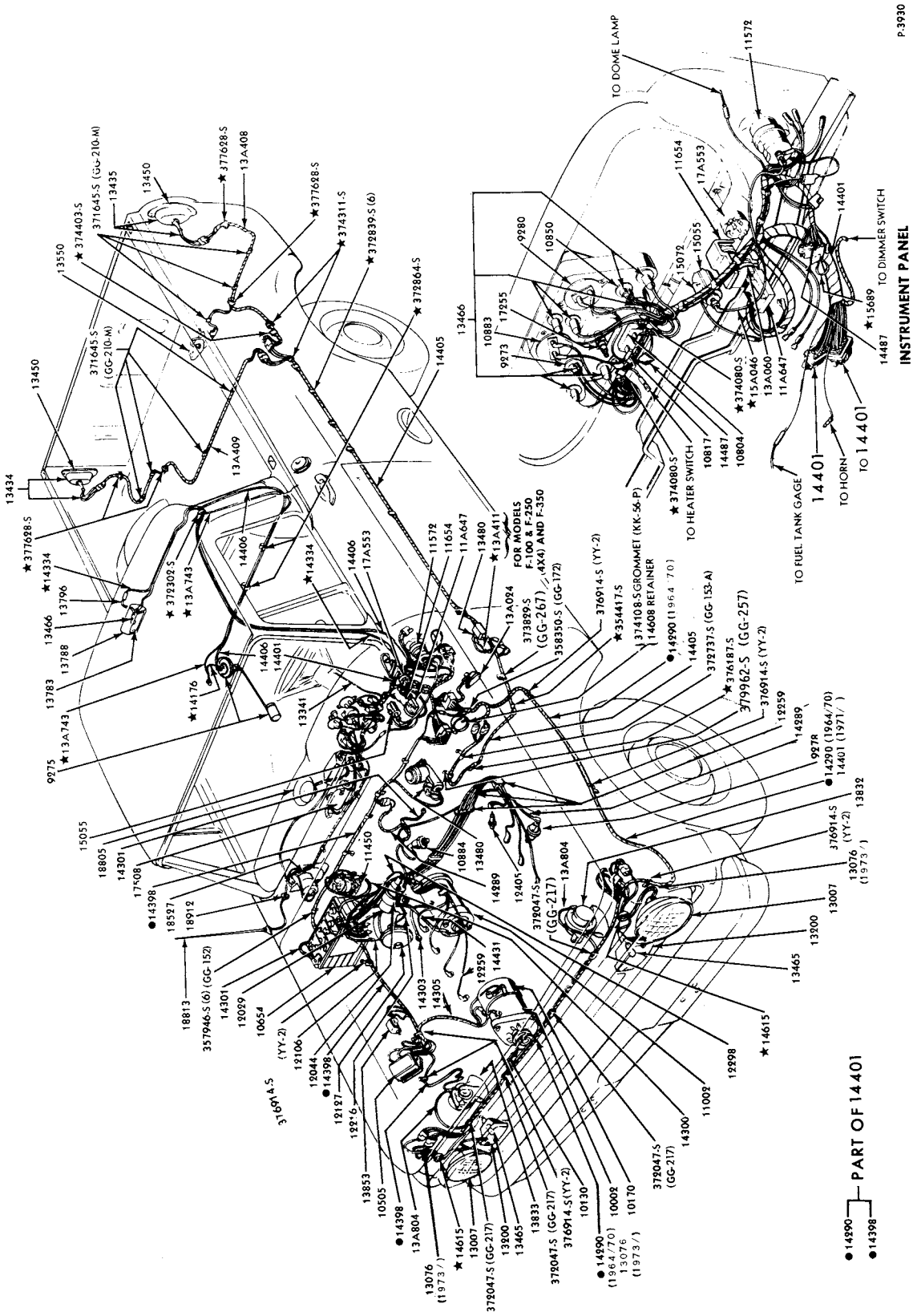

WIRING SYSTEM-TYPICAL
1973/77 F100/350--8 CYL.

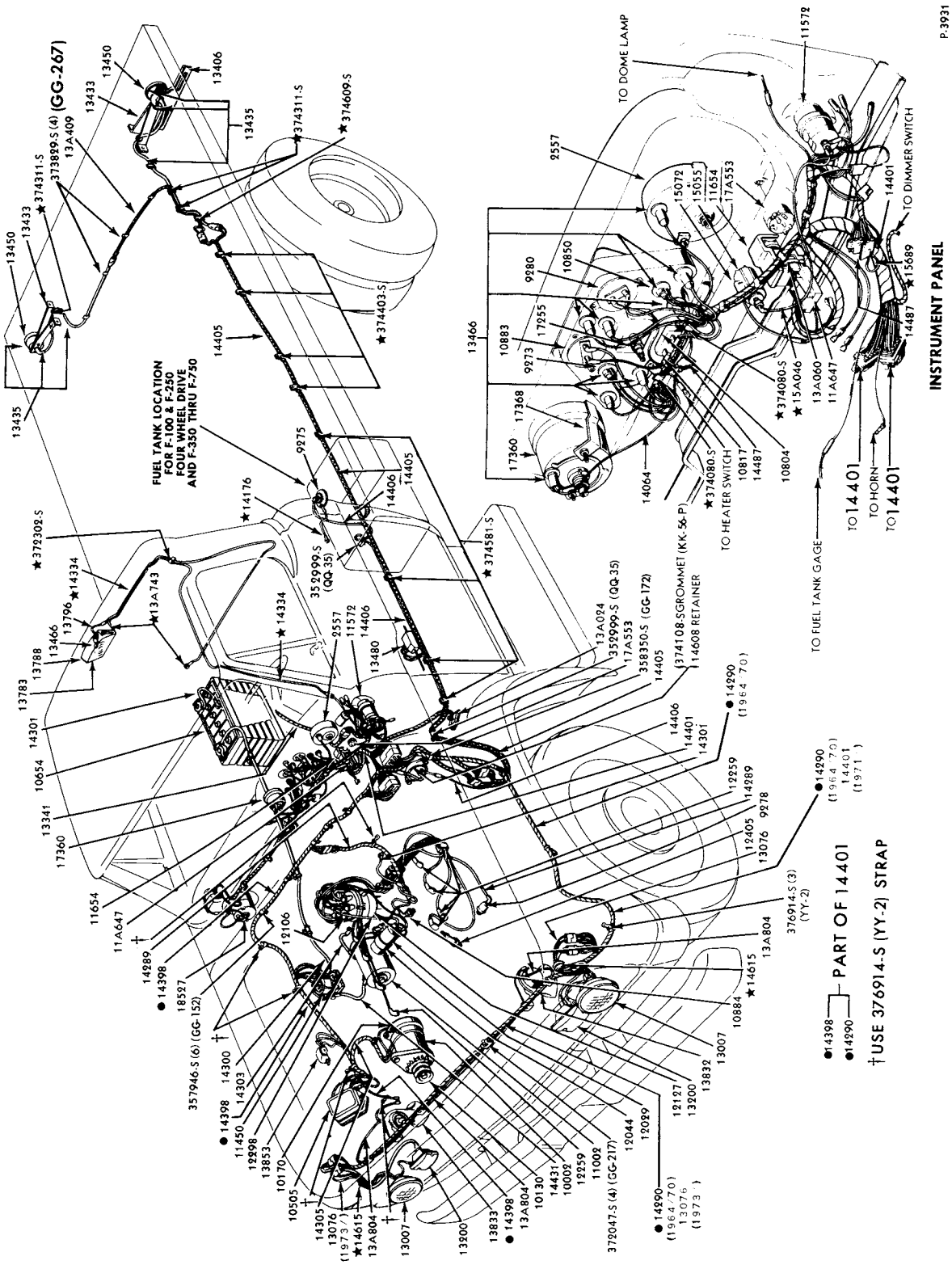

WIRING SYSTEM-TYPICAL
1973/77 B-F500--8 CYL.

COPYRIGHT © 1979 — FORD MOTOR-DEARBORN, MICHIGAN
COMPANY

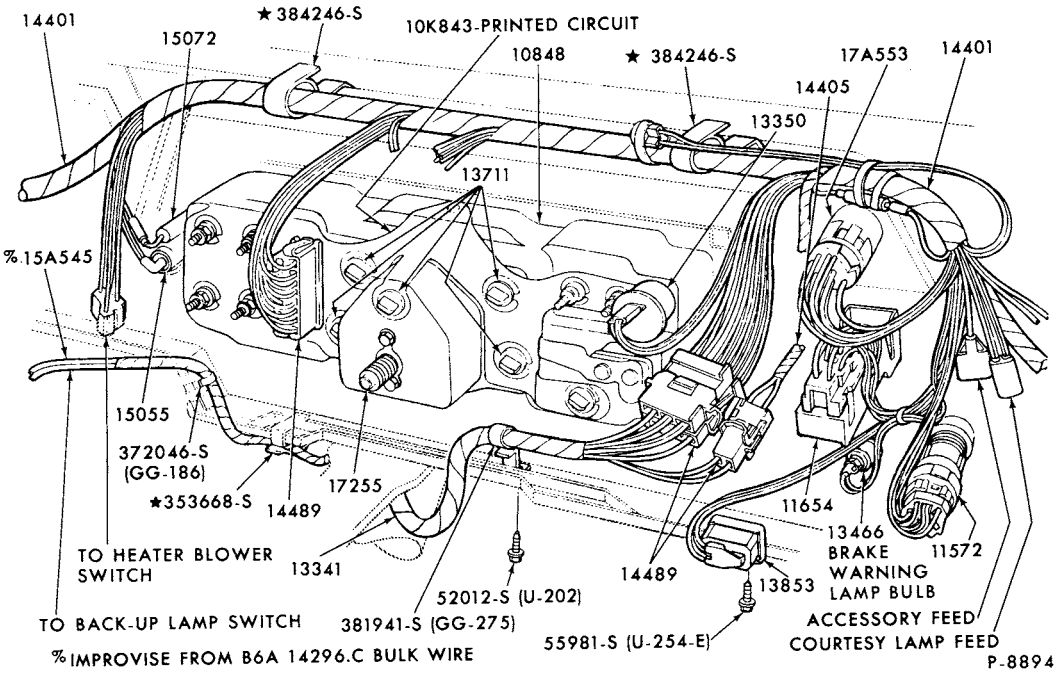

WIRING SYSTEM-INSTRUMENT PANEL (PRINTED CIRCUIT)
1973/74 E100/300

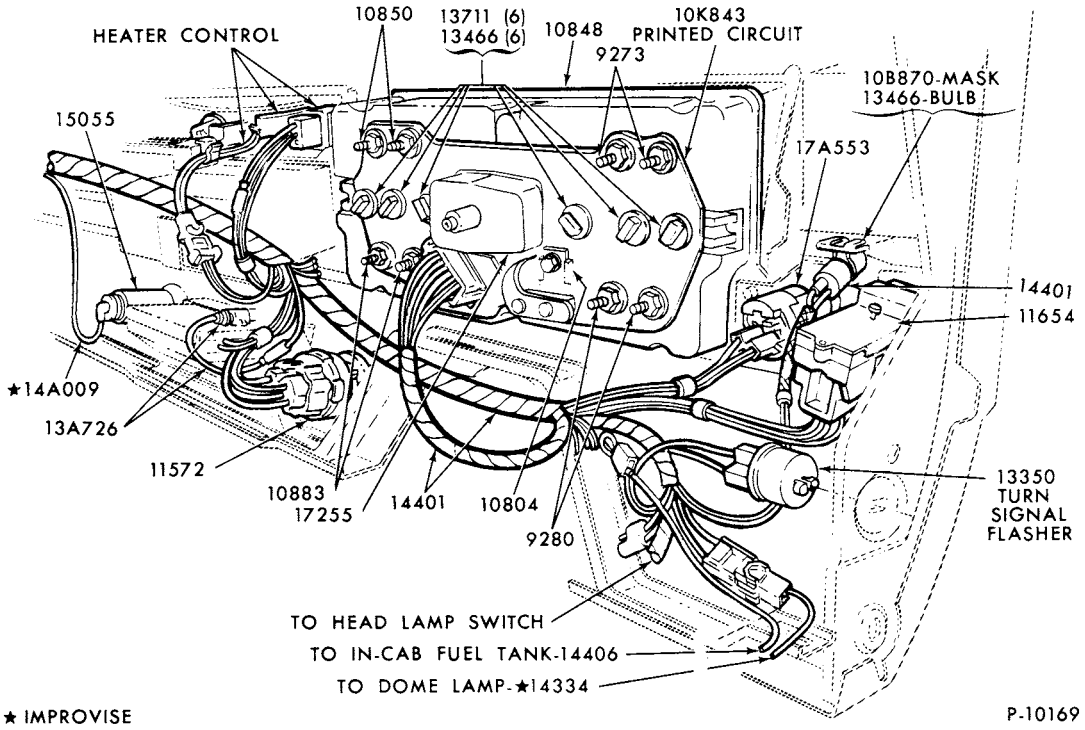

WIRING SYSTEM-INSTRUMENT PANEL (PRINTED CIRCUIT)
1973/ F100/350-BODY TYPE 81

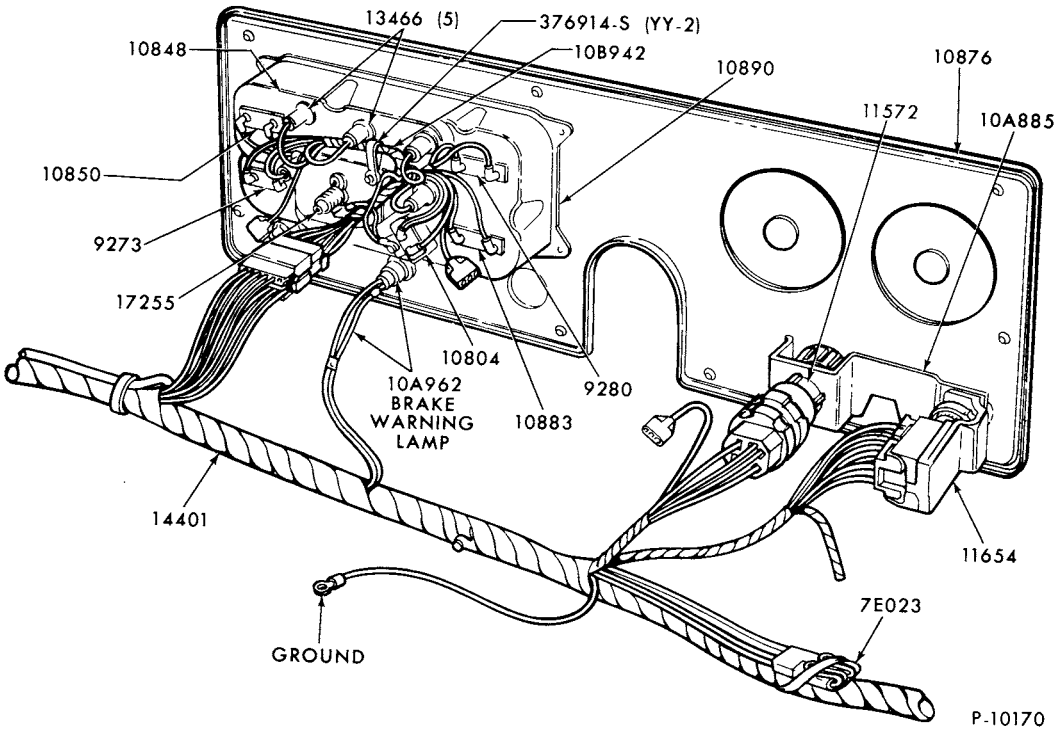

WIRING SYSTEM-INSTRUMENT PANEL
1973/76 F350-BODY TYPE 84

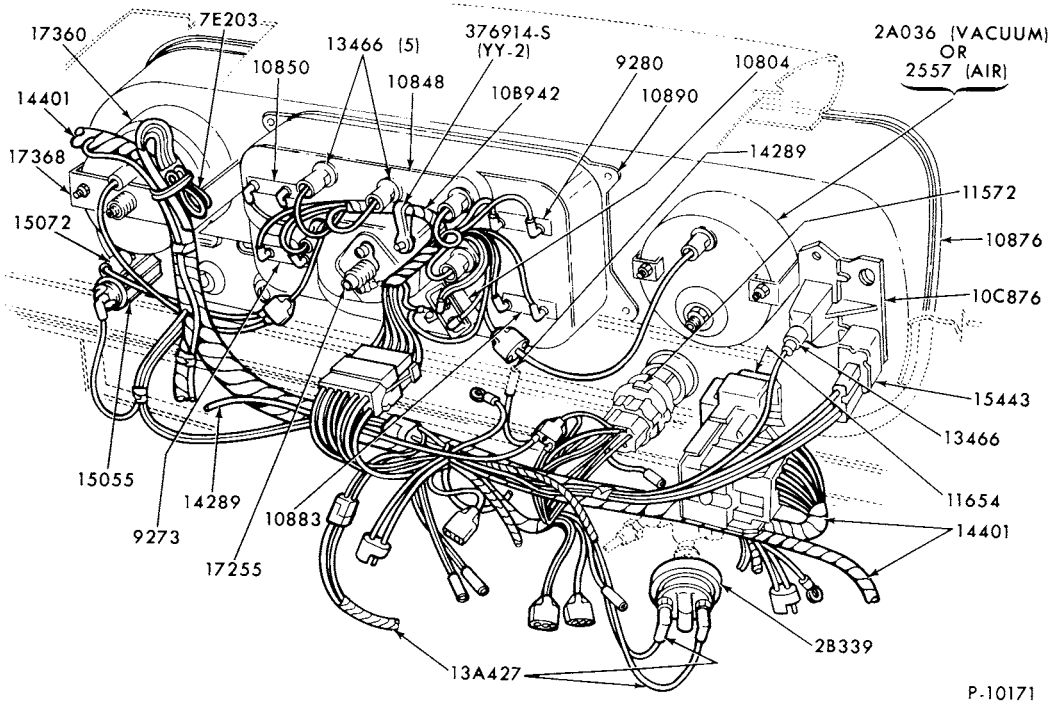

WIRING SYSTEM-INSTRUMENT PANEL
1973/77 F500-BODY TYPE 81

COPYRIGHT © 1979 FORD MOTOR COMPANY DEARBORN, MICHIGAN

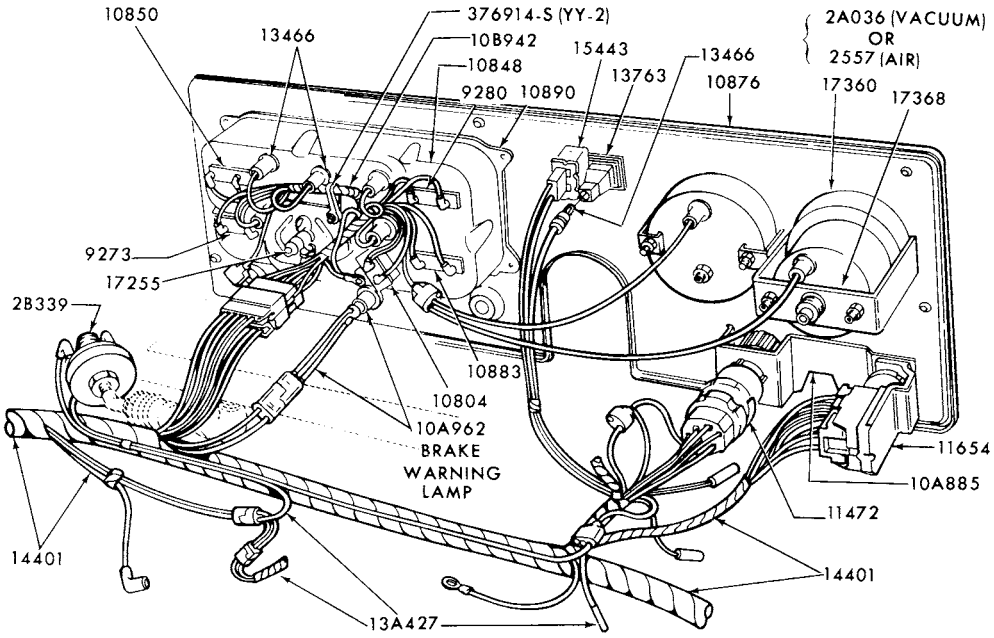

WIRING SYSTEM-INSTRUMENT PANEL
1973/77 B-F500-BODY TYPE 84

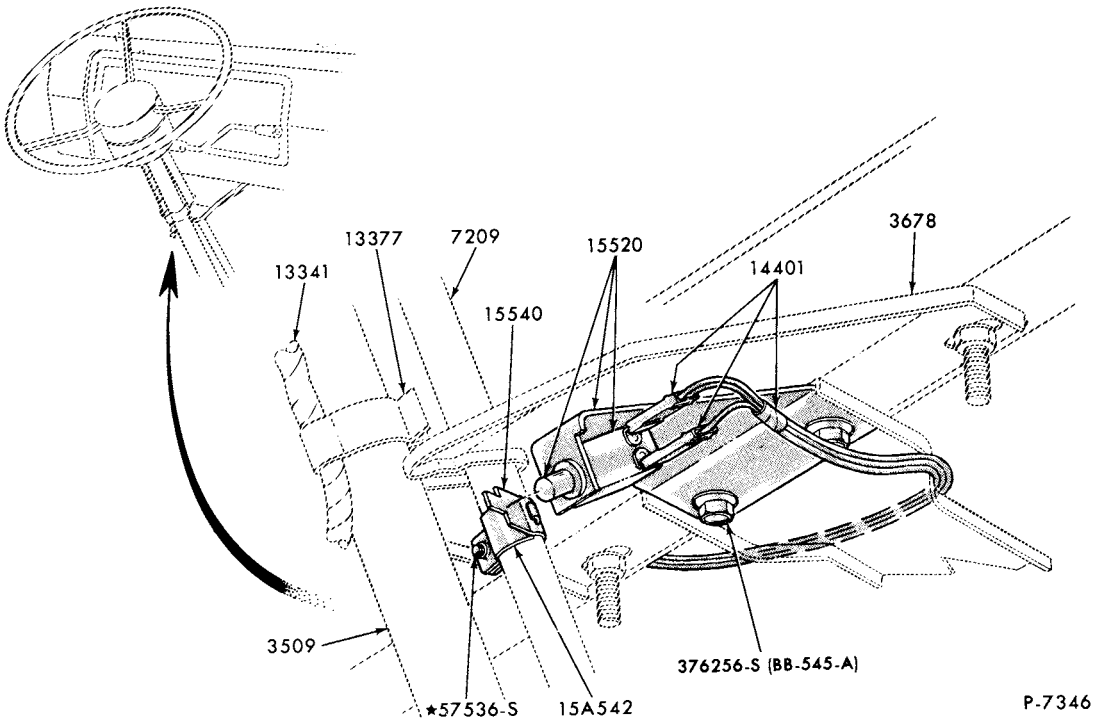

BACKUP LAMP SWITCH and RELATED PARTS
1973/74 E100/300

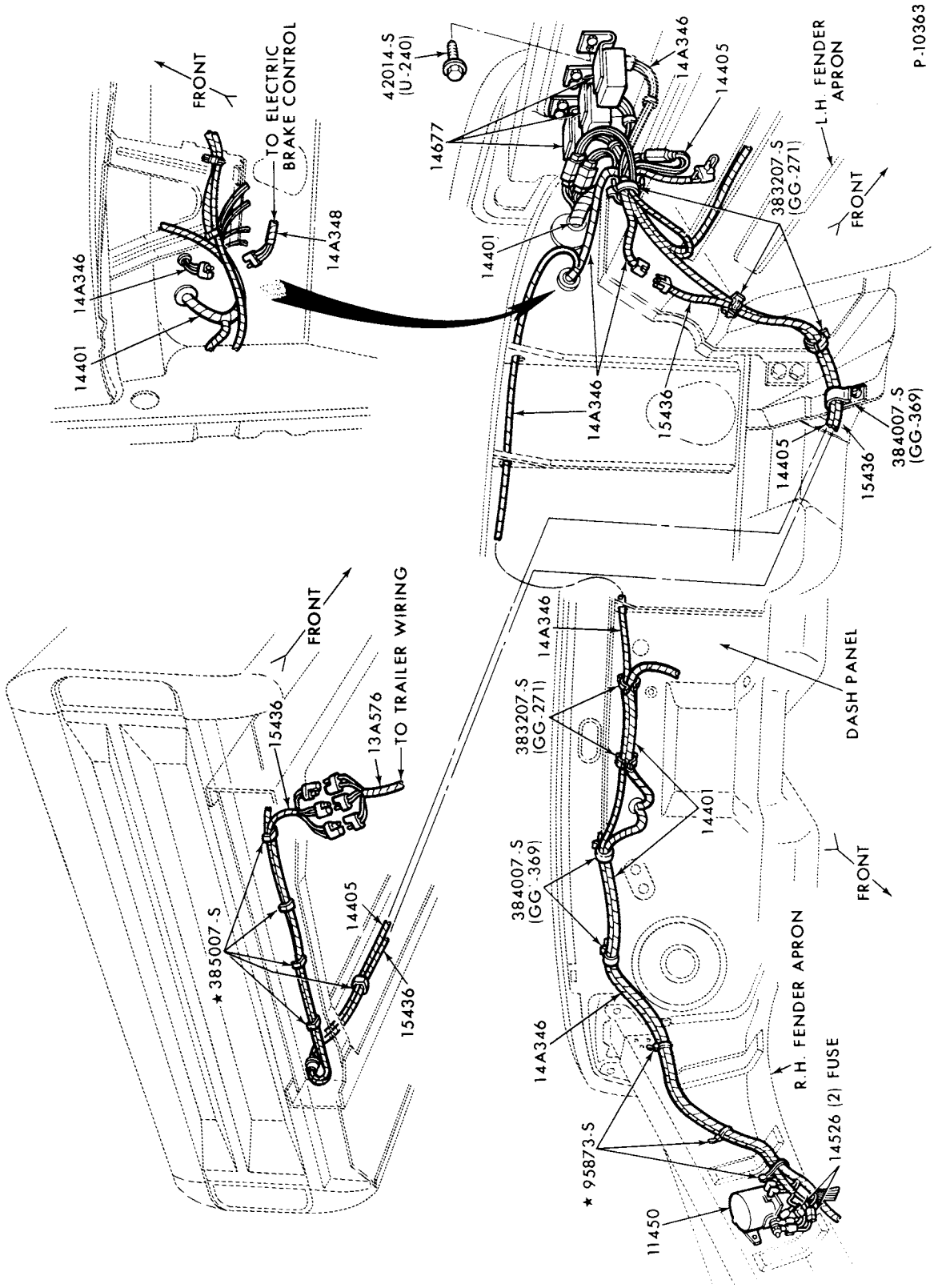

WIRING ASSY. - TRAILER TOWING INSTALLATION
1973/ F100/350

COPYRIGHT © 1979--FORD MOTOR-DEARBORN, MICHIGAN COMPANY

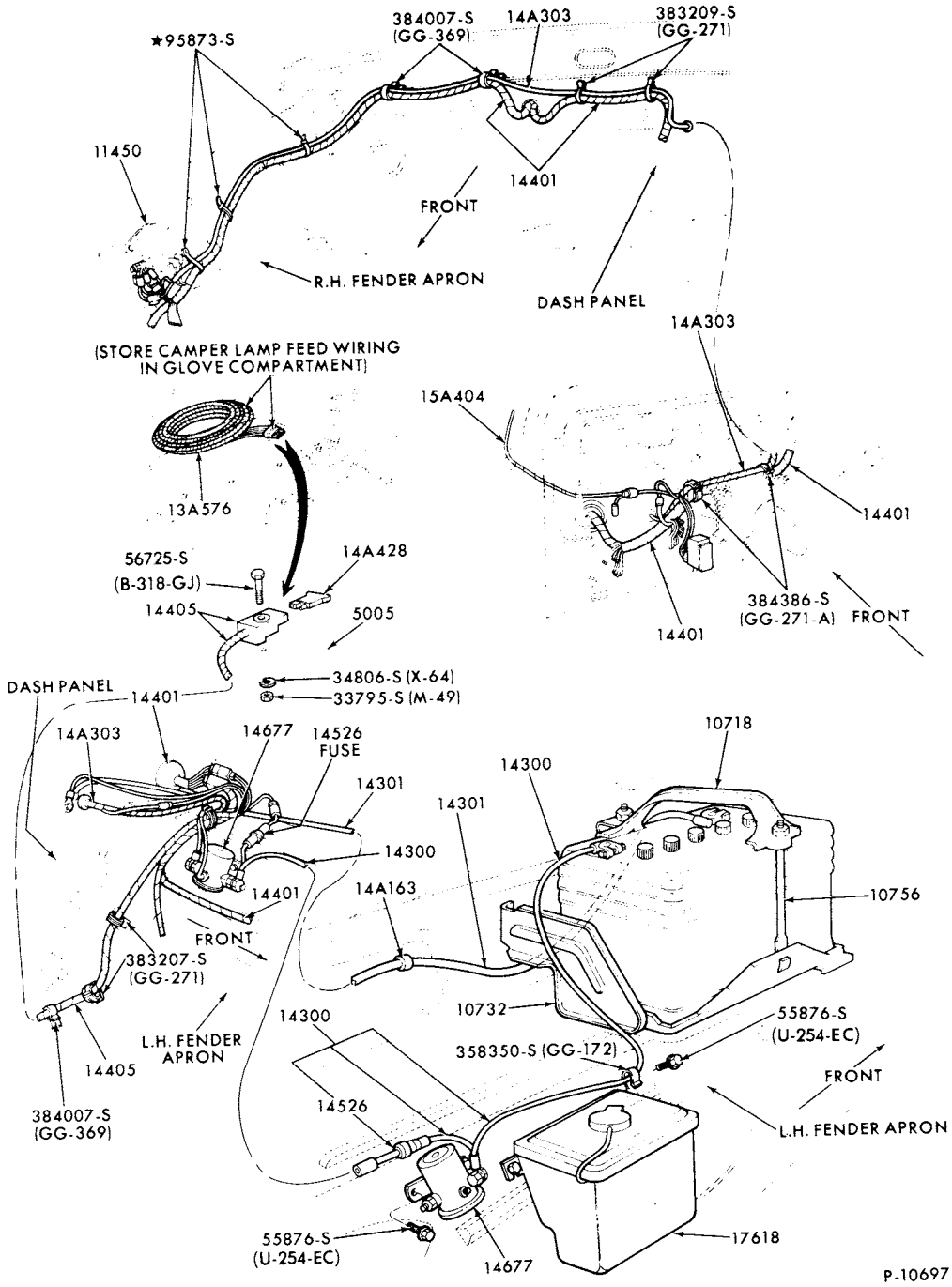

DUAL BATTERY WIRING and RELAY INSTALLATION
1973/ F100/350

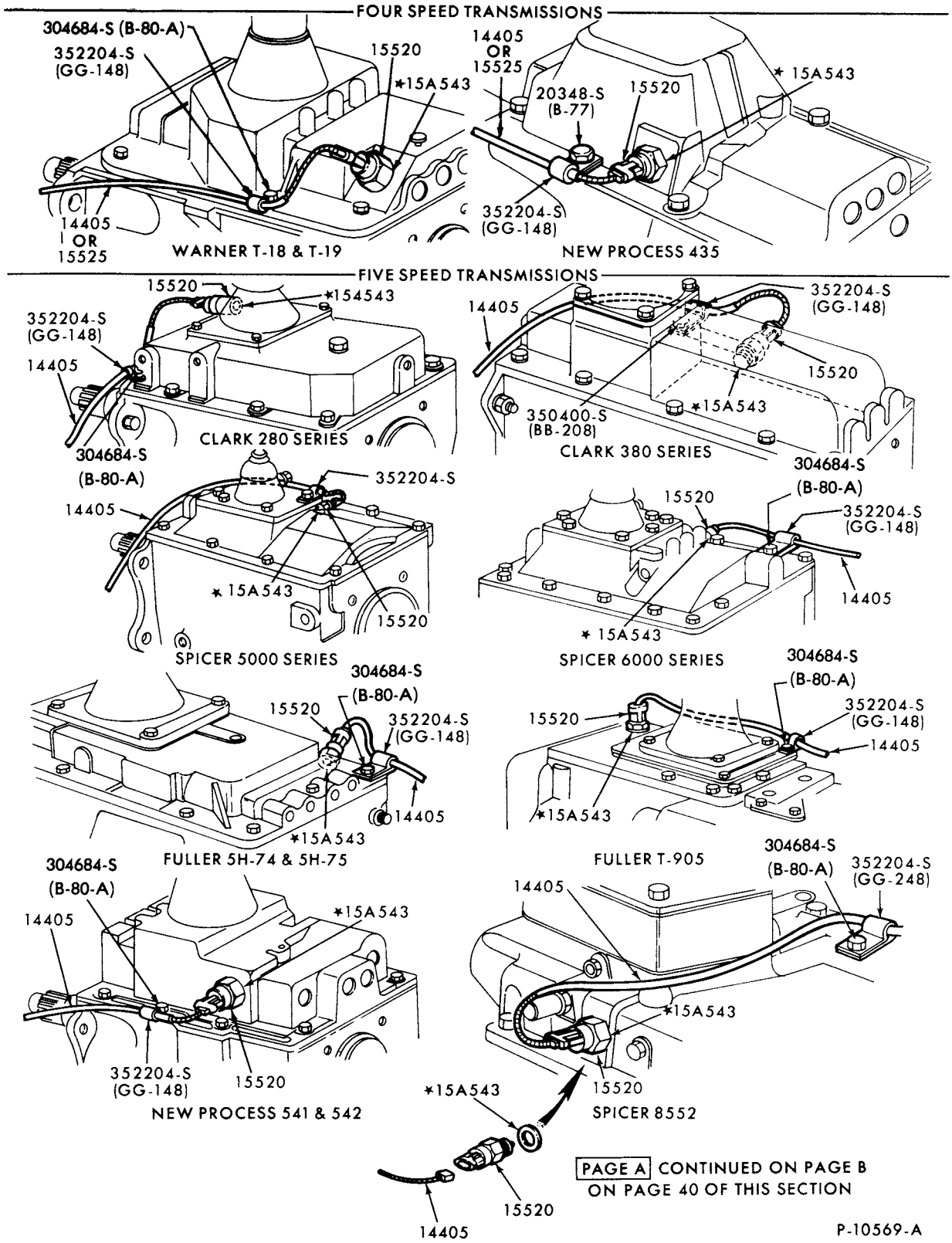

BACK-UP LAMP SWITCH and WIRING-TYPICAL--PAGE A
1973/ MANUAL TRANSMISSION

COPYRIGHT © 1979 FORD MOTOR COMPANY, DEARBORN, MICHIGAN

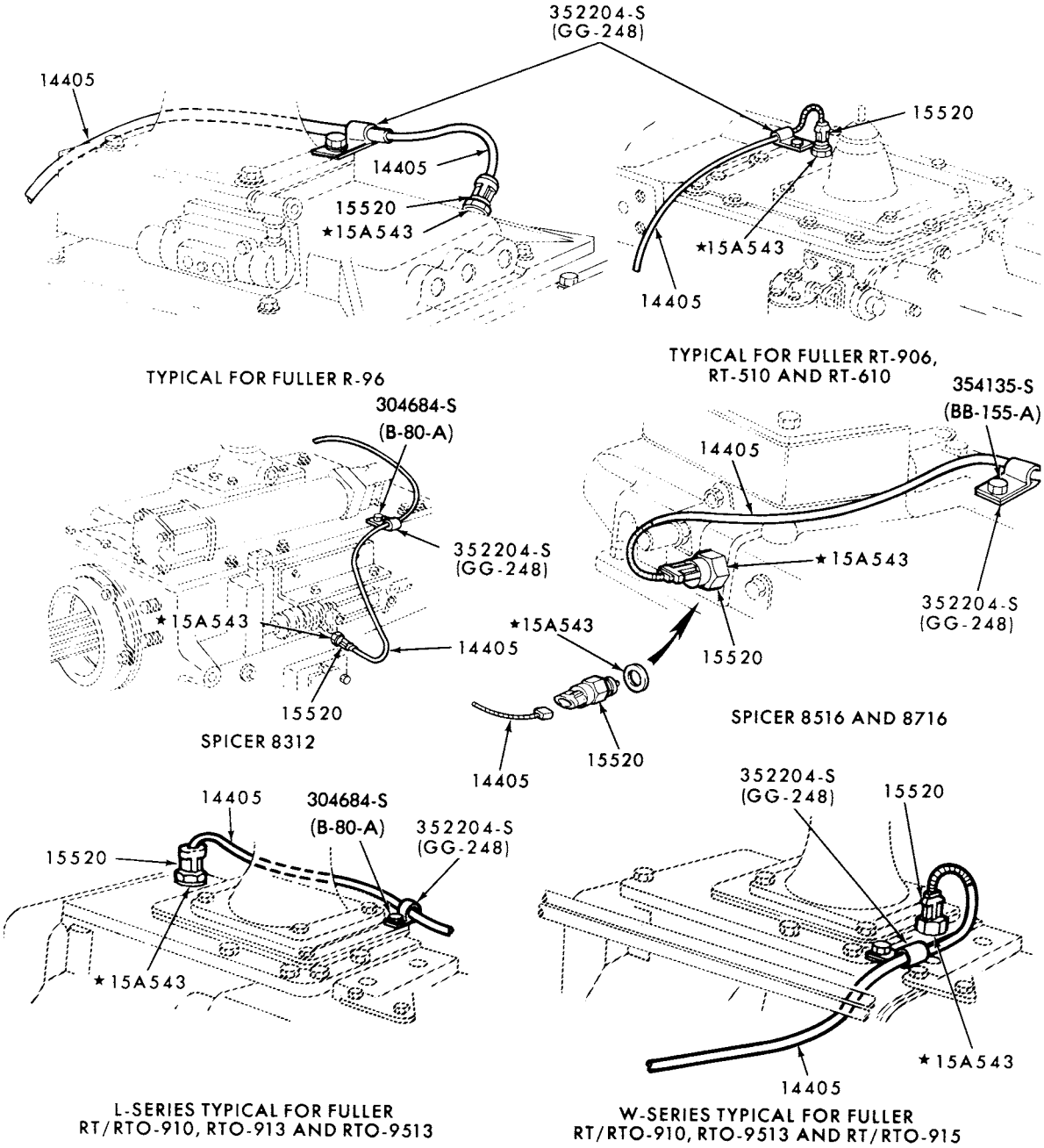

PAGE B

P-10569-B

BACK-UP LAMP SWITCH and WIRING-TYPICAL--PAGE B
1973/ MANUAL TRANSMISSION

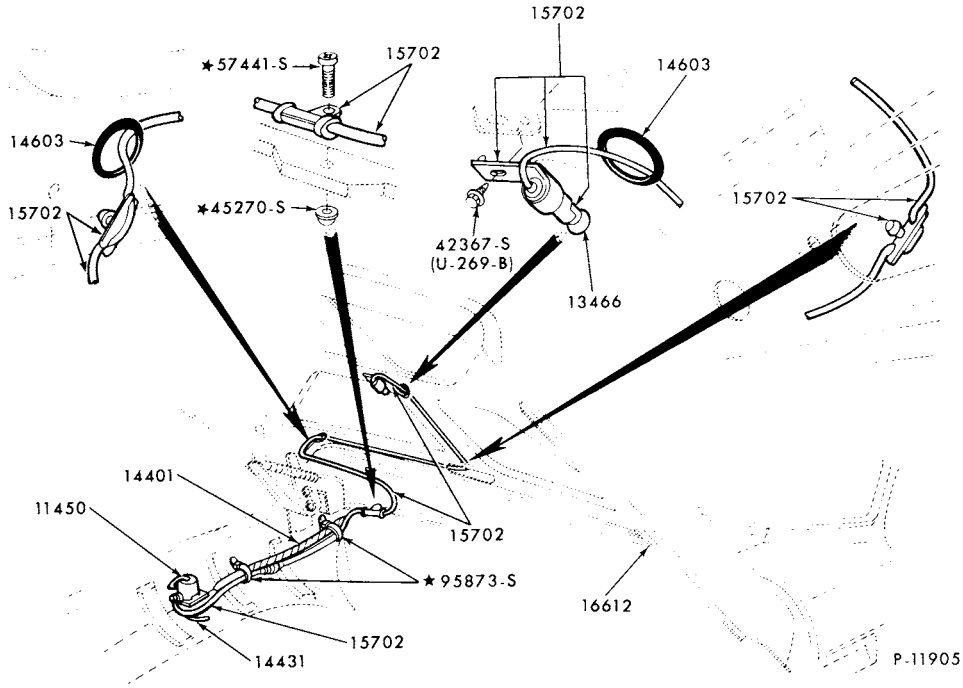

ENGINE COMPARTMENT LAMP
1973/ F100/350

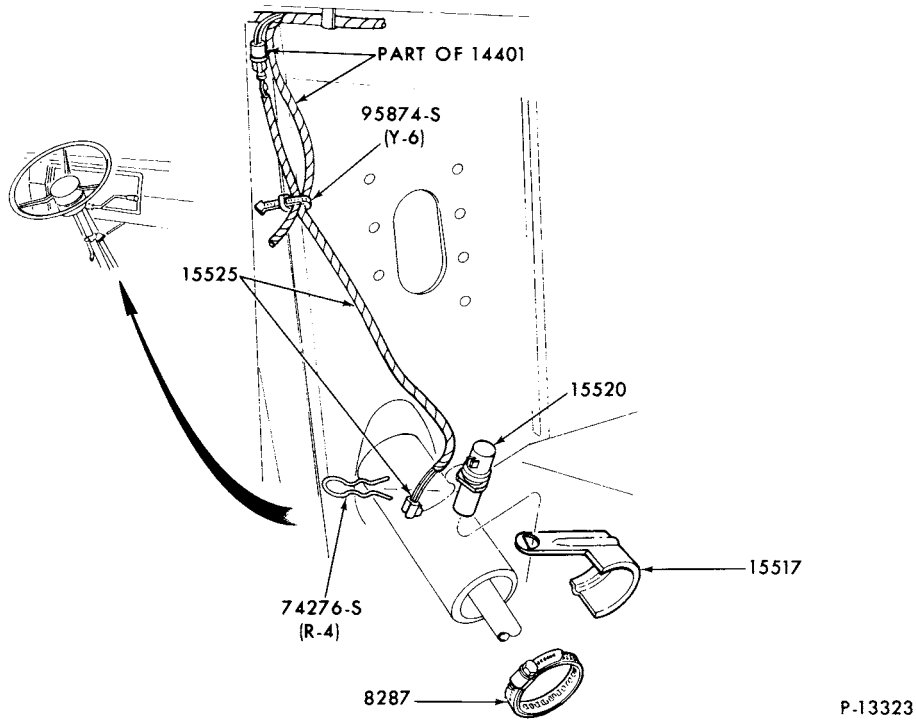

BACKUP LAMP SWITCH and RELATED PARTS
1975/ E100/350

COPYRIGHT © 1979 FORD MOTOR COMPANY, DEARBORN, MICHIGAN

1973/79 TRUCK SERIES 100/500

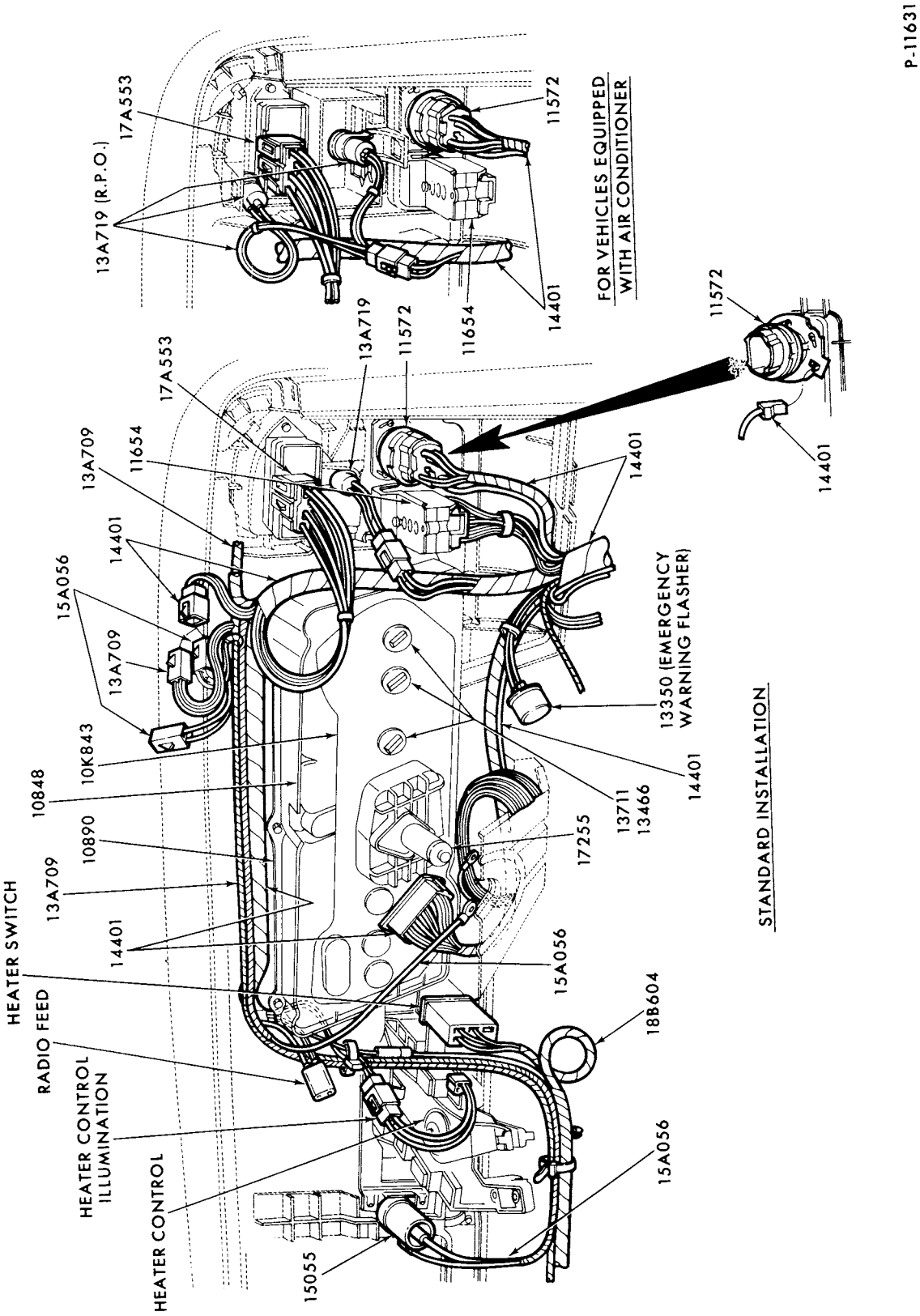

WIRING SYSTEM - INSTRUMENT PANEL (PRINTED CIRCUIT)
1975/ E100/350

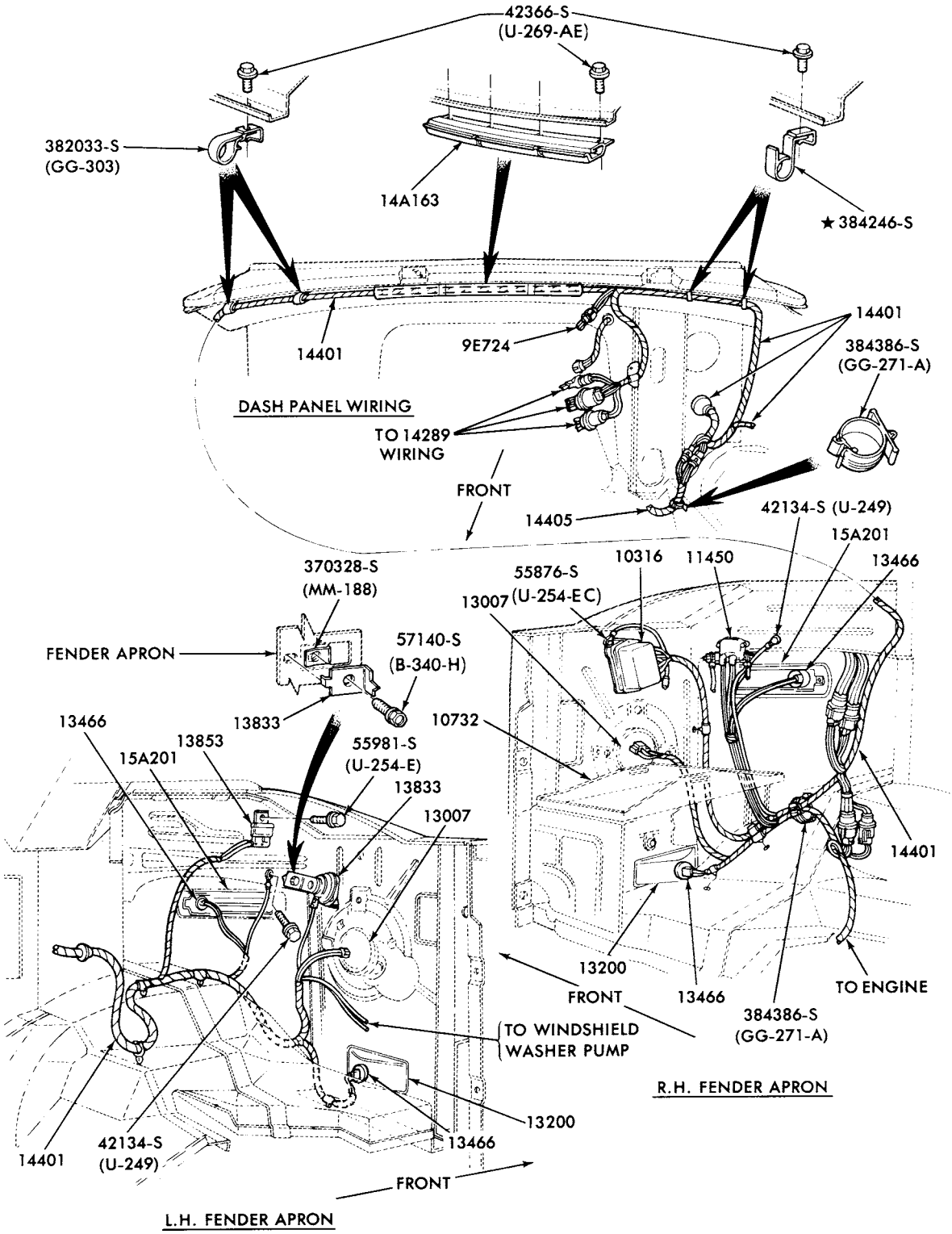

P-12291

WIRING SYSTEM-FENDER APRON and RELATED PARTS
1975/ E100/350

COPYRIGHT © 1979 FORD MOTOR-DEARBORN, MICHIGAN
COMPANY

1973/79 TRUCK SERIES 100/500

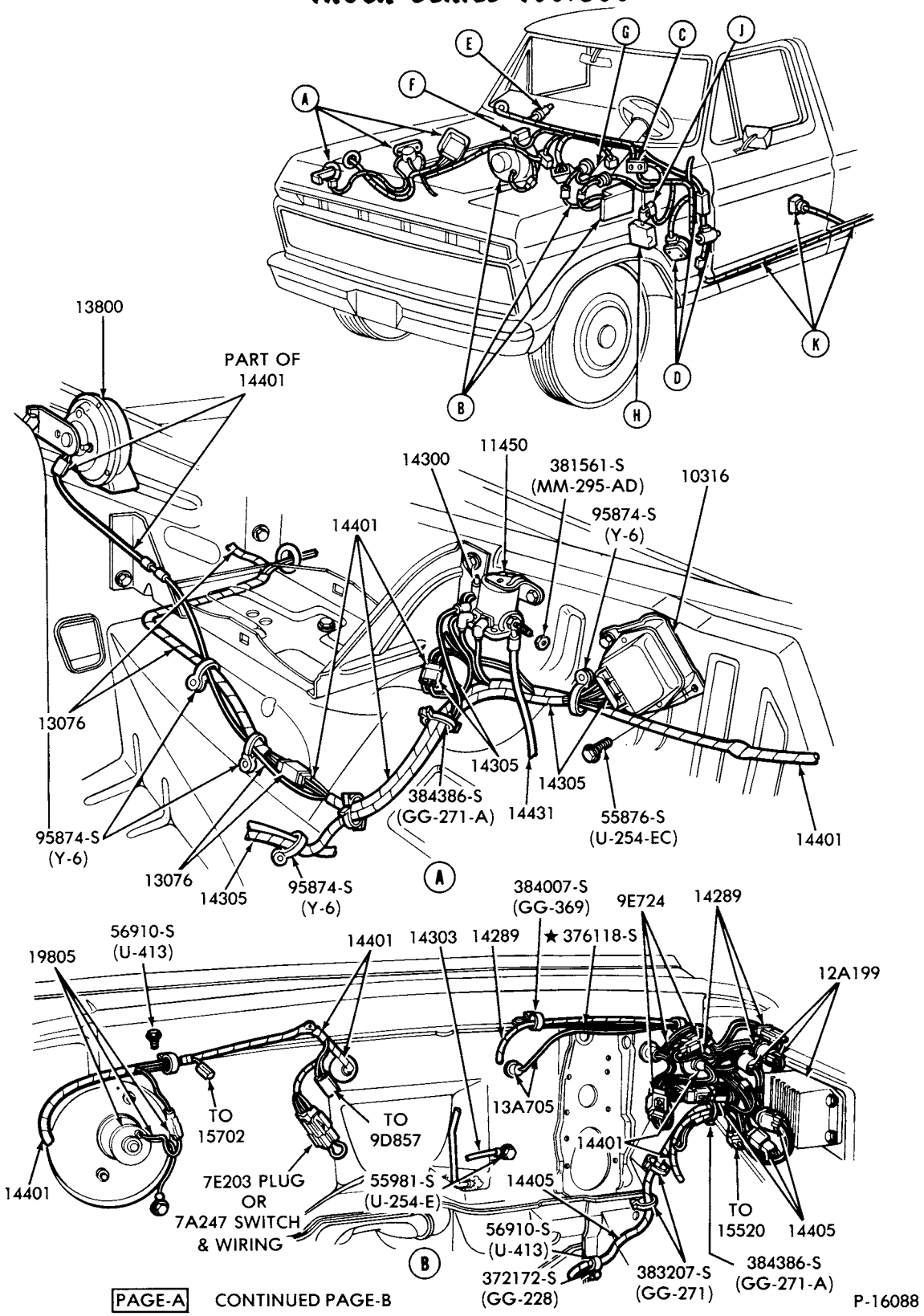

WIRING SYSTEM - TYPICAL (PAGE A)
1978/ F100/350

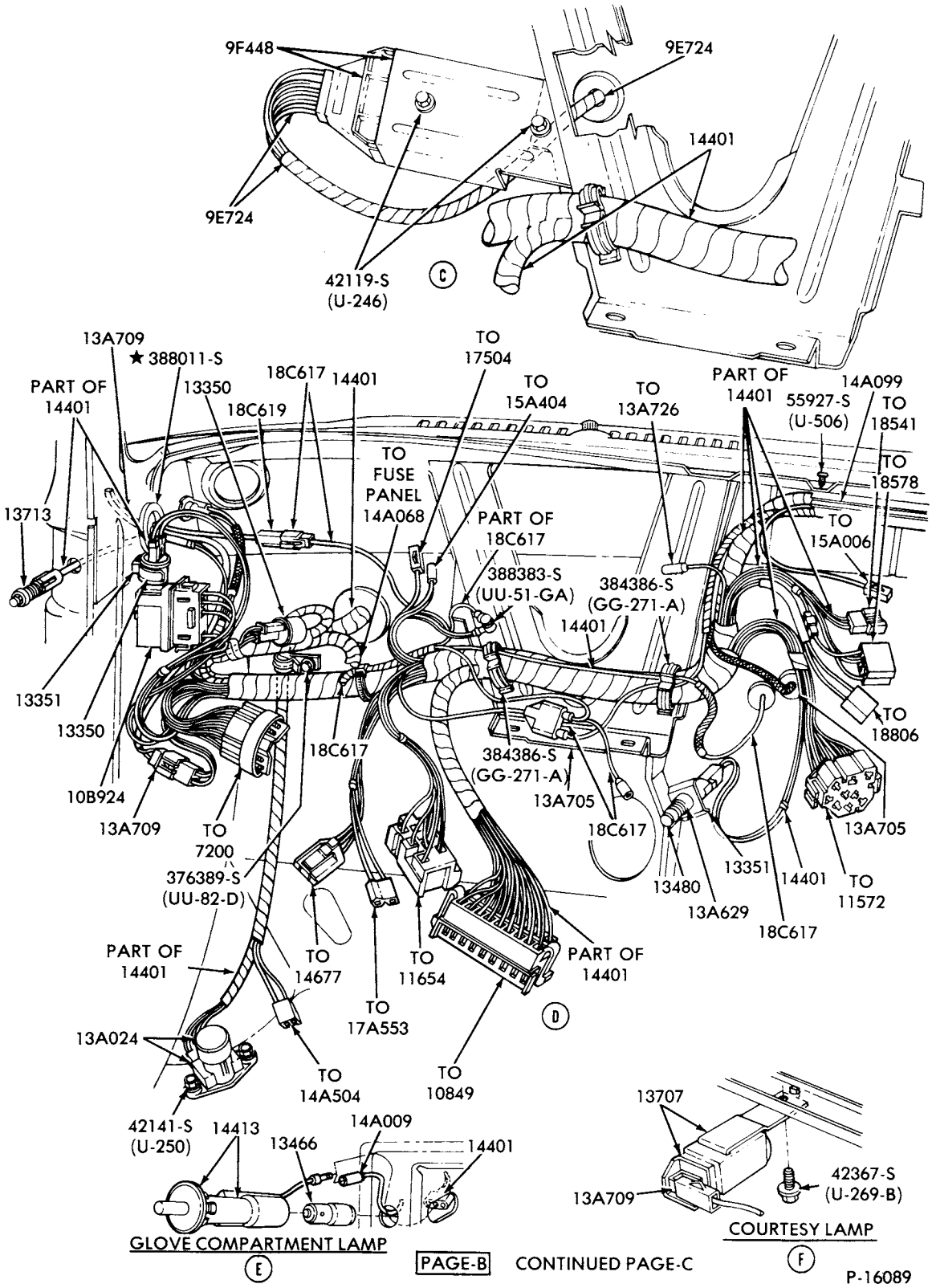

WIRING SYSTEM - TYPICAL (PAGE B)
1978/ F100/350

COPYRIGHT © 1979 FORD MOTOR COMPANY, DEARBORN, MICHIGAN

1973/79 TRUCK SERIES 100/500

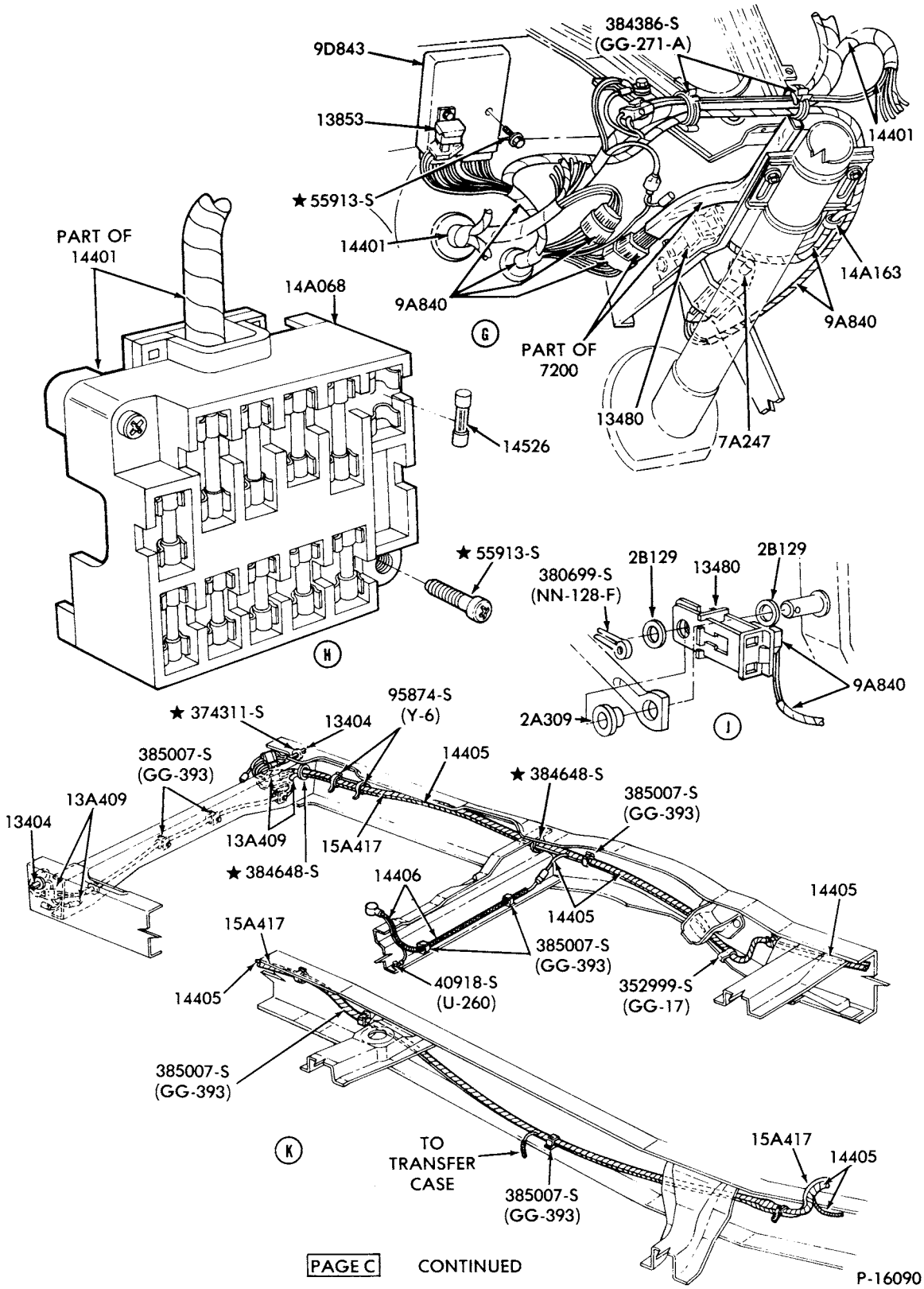

WIRING SYSTEM - TYPICAL (PAGE C)
1978/ F100/350

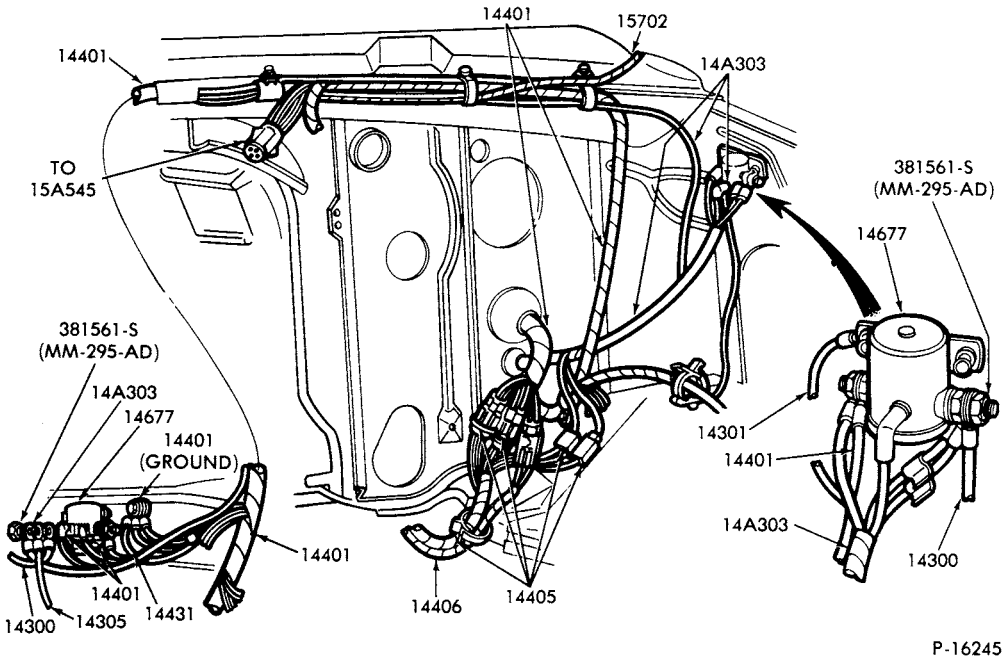

RELAY FEED WIRING
TRAILER TOW - with DUAL BATTERIES
1973/ E100/350

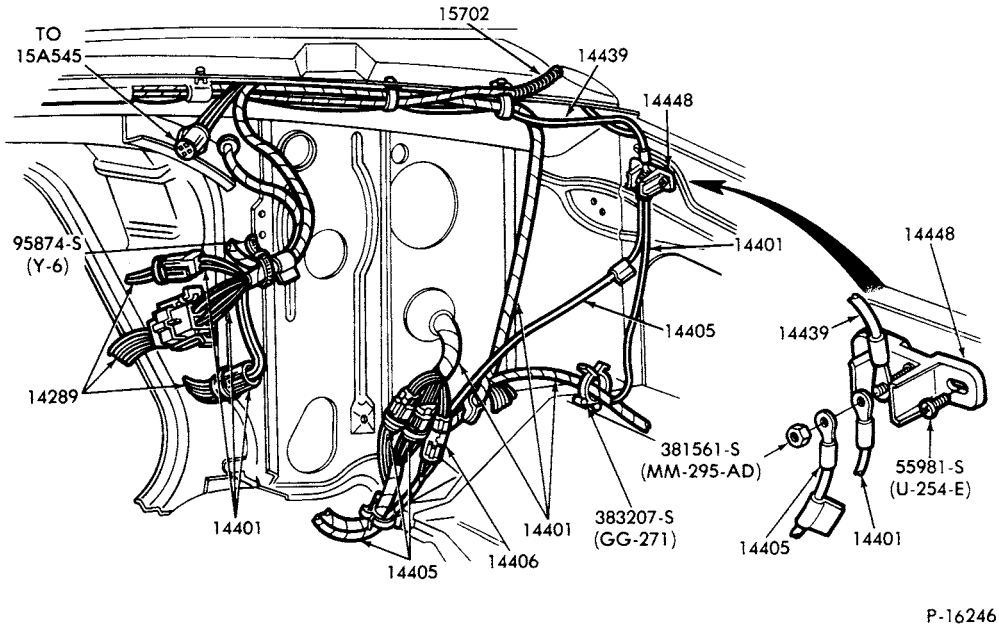

RELAY FEED WIRING
STANDARD and CAMPER WIRING - without DUAL BATTERIES
1973/ E100/350

COPYRIGHT © 1980 FORD MOTOR COMPANY, DEARBORN, MICHIGAN

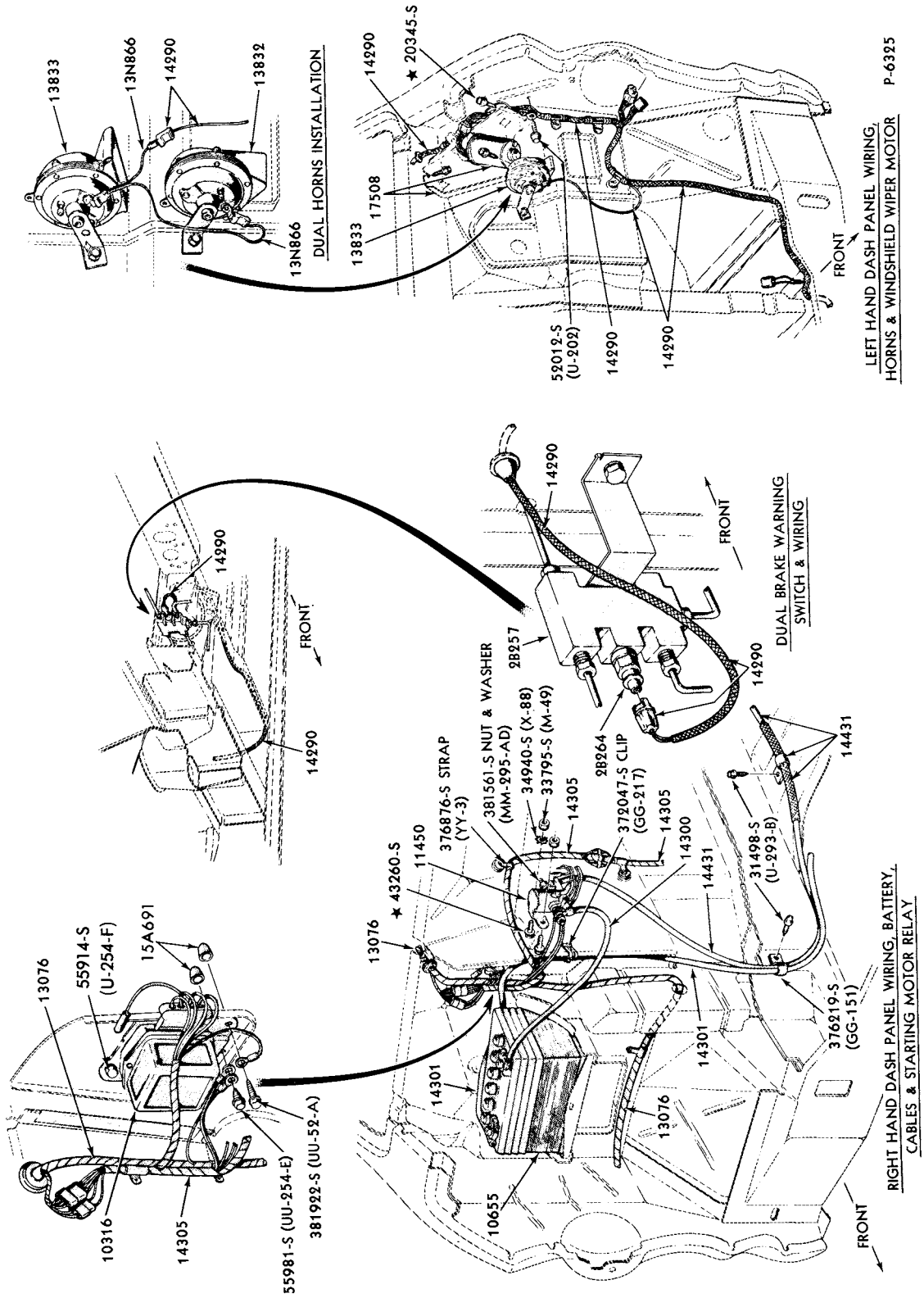

DASH PANEL WIRING and RELATED PARTS
1973/74 E100/300

COPYRIGHT © 1979—FORD MOTOR—DEARBORN, MICHIGAN
COMPANY

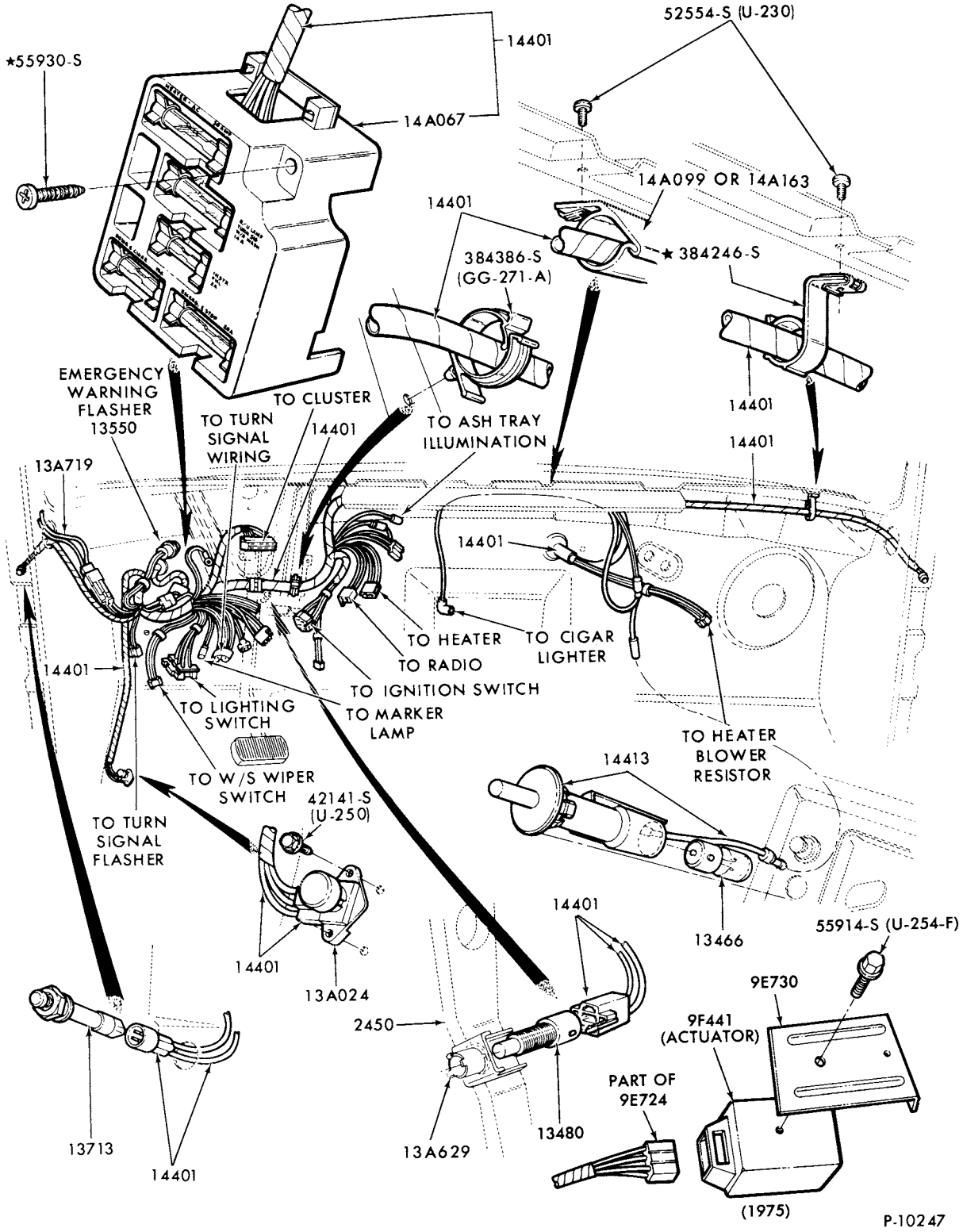

DASH PANEL WIRING and RELATED PARTS
1973/75 F100/350-BODY TYPE 81

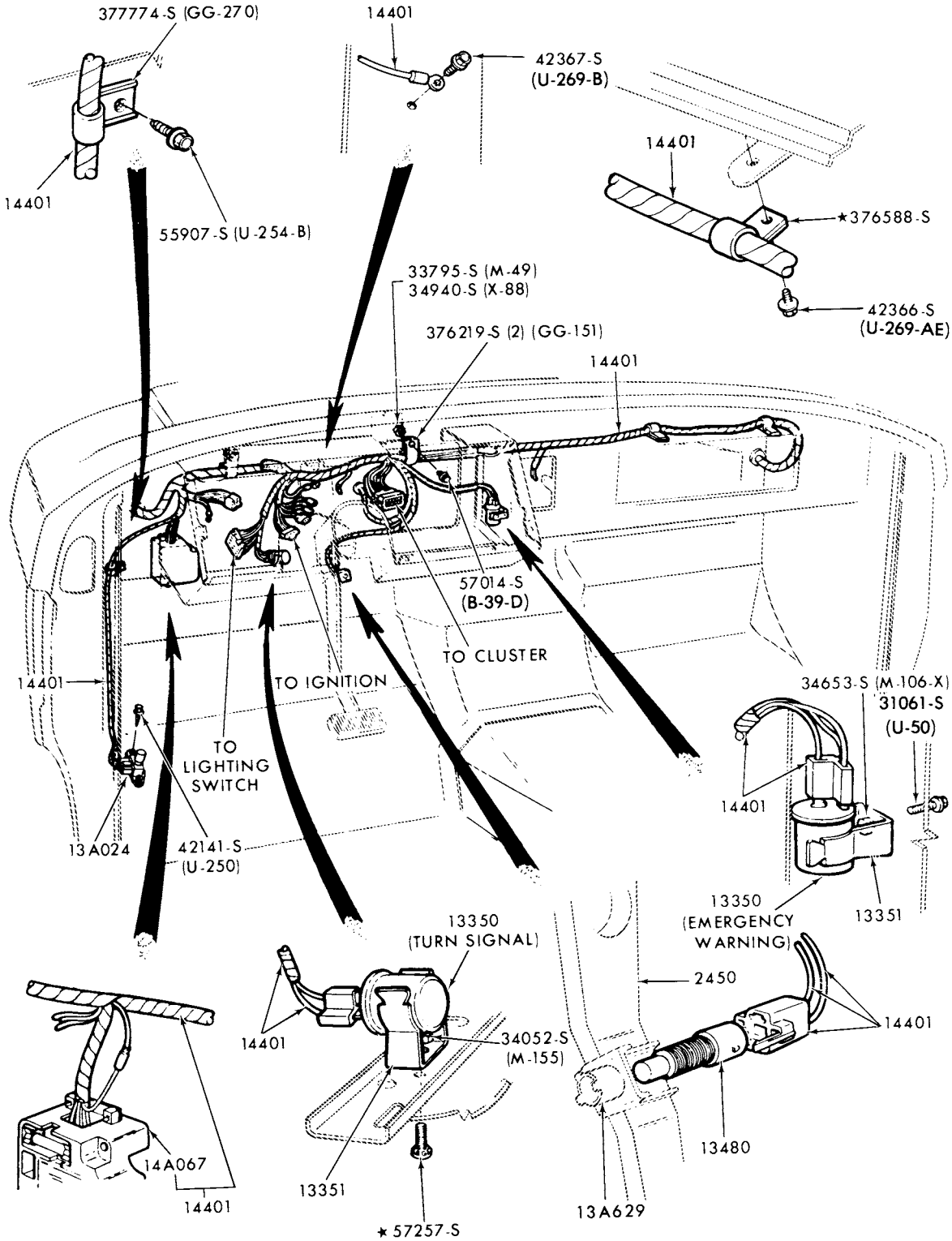

P-10249

DASH PANEL WIRING and RELATED PARTS
1973/ F350-BODY TYPE 84

COPYRIGHT © 1979 - FORD MOTOR - DEARBORN, MICHIGAN
COMPANY

1973/79 TRUCK SERIES 100/500

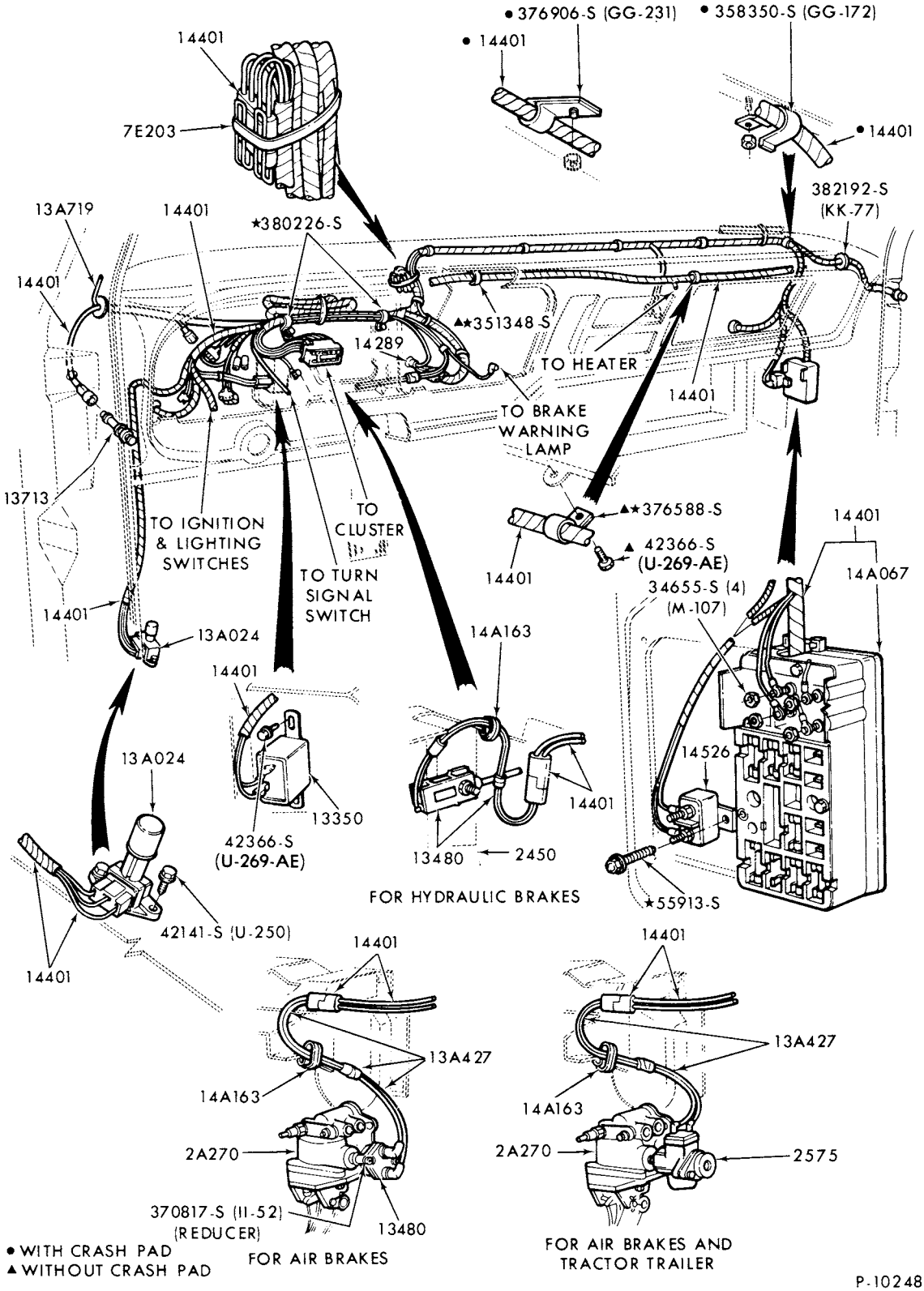

DASH PANEL WIRING and RELATED PARTS
1973/77 F500-BODY TYPE 81

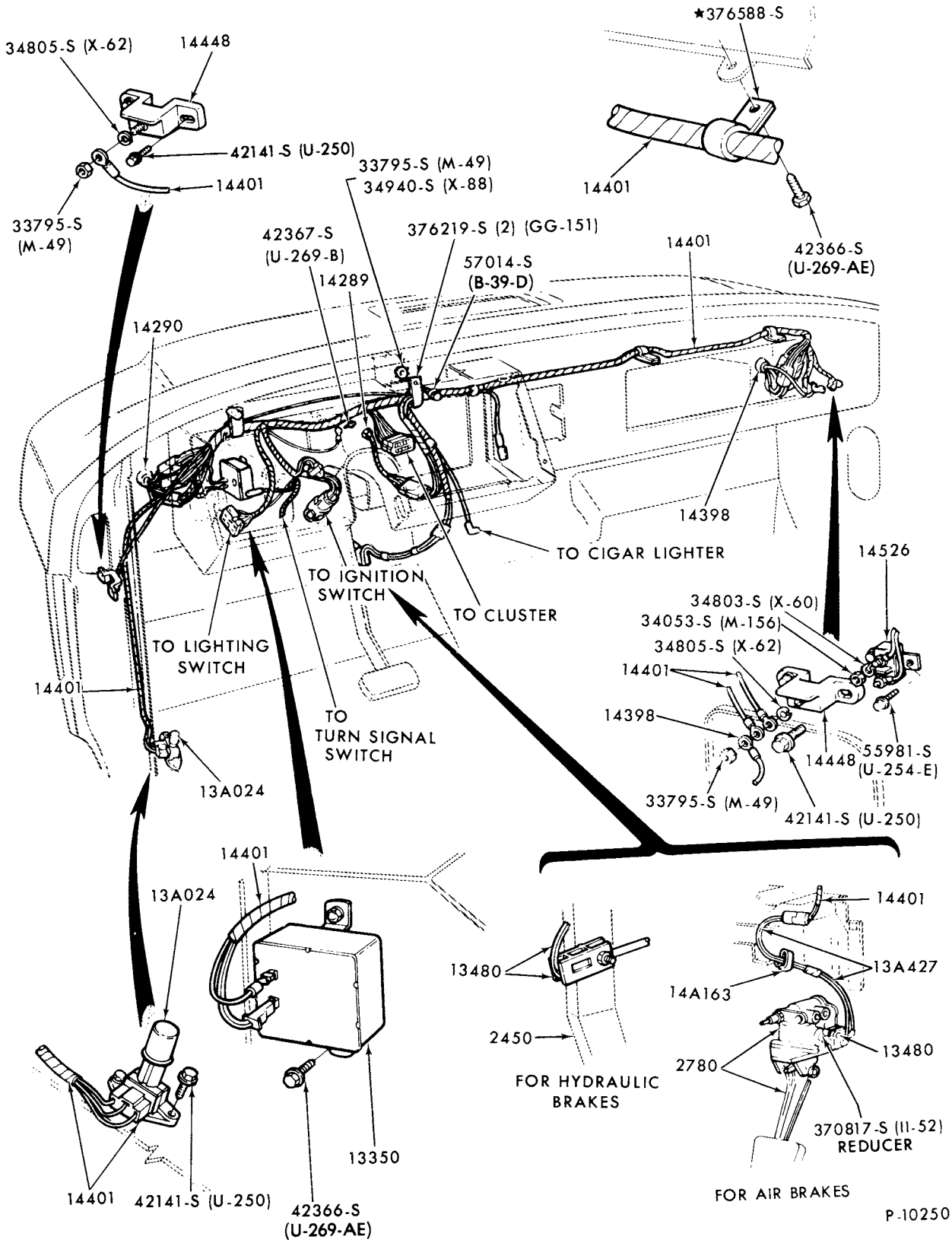

DASH PANEL WIRING and RELATED PARTS
1973/ B-F500-BODY TYPE 84

COPYRIGHT © 1979 - FORD MOTOR COMPANY - DEARBORN, MICHIGAN

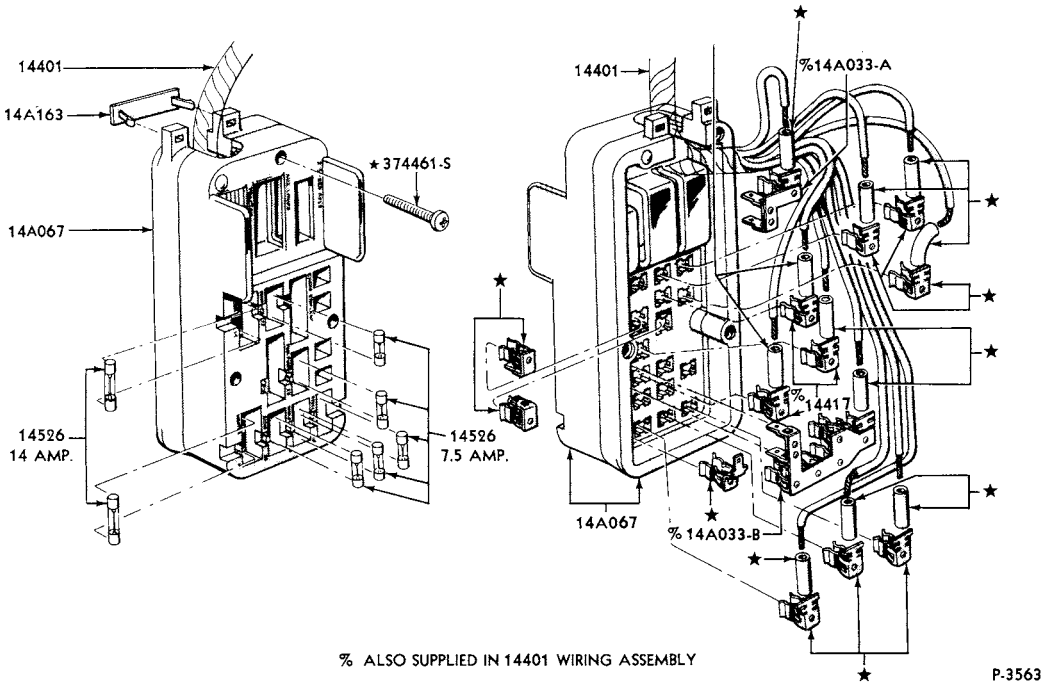

FUSE JUNCTION PANEL-TYPICAL
1973/ F100/350, 1973/77 B-F-P500 and 1973/76 P350/400

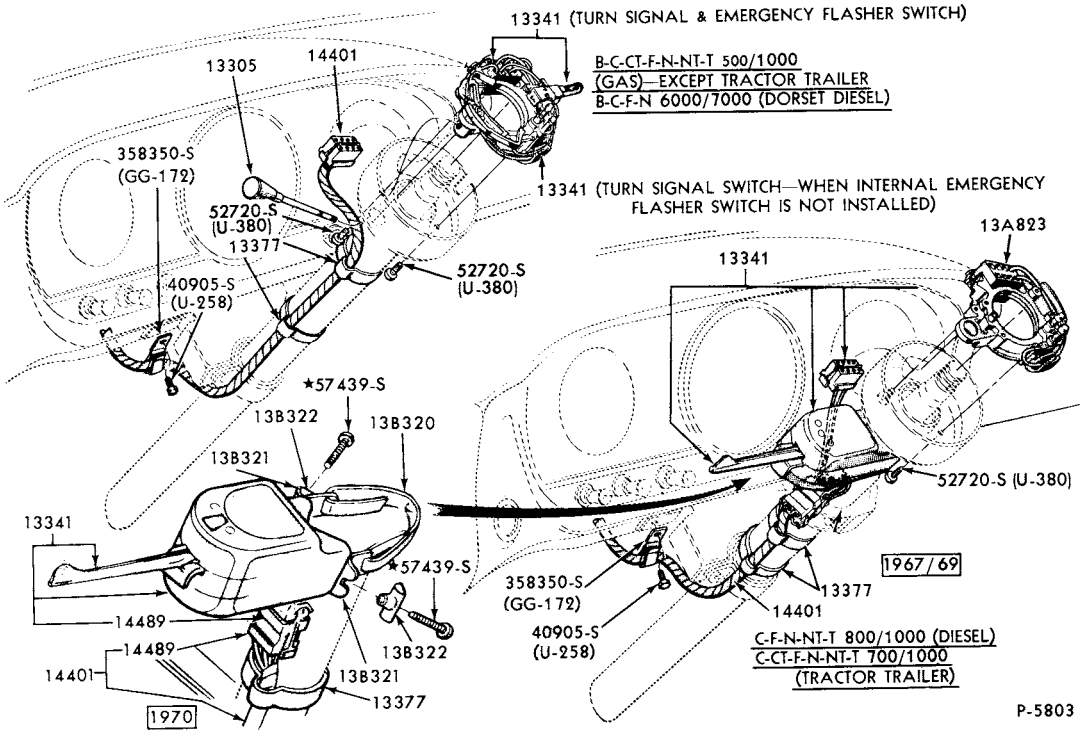

TURN INDICATOR and EMERGENCY WARNING FLASHER SYSTEM-TYPICAL
1973/77 B-F500

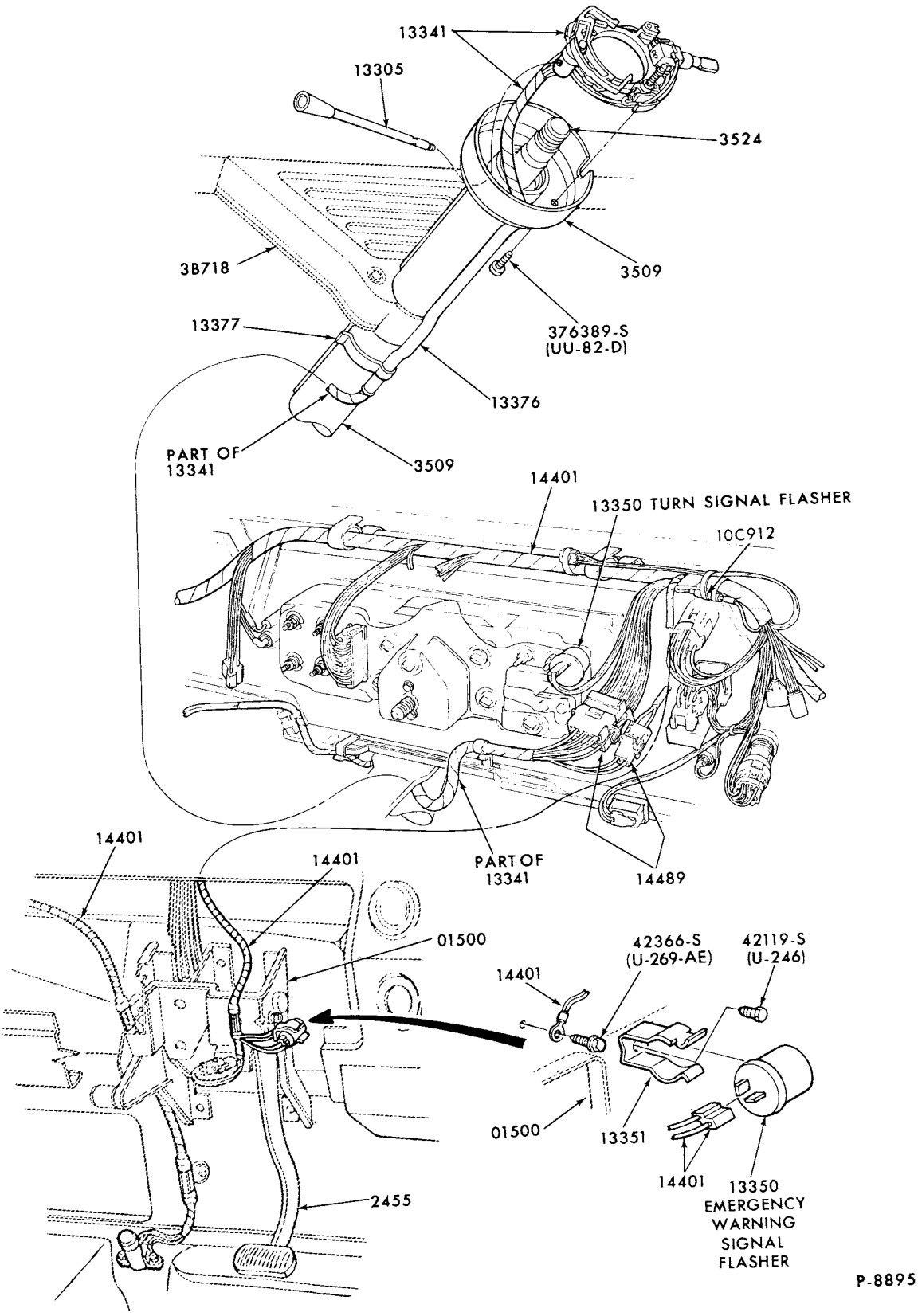

TURN INDICATOR and EMERGENCY FLASHER WARNING SYSTEM
1973/ E100/350

COPYRIGHT © 1979-FORD MOTOR-DEARBORN, MICHIGAN
COMPANY

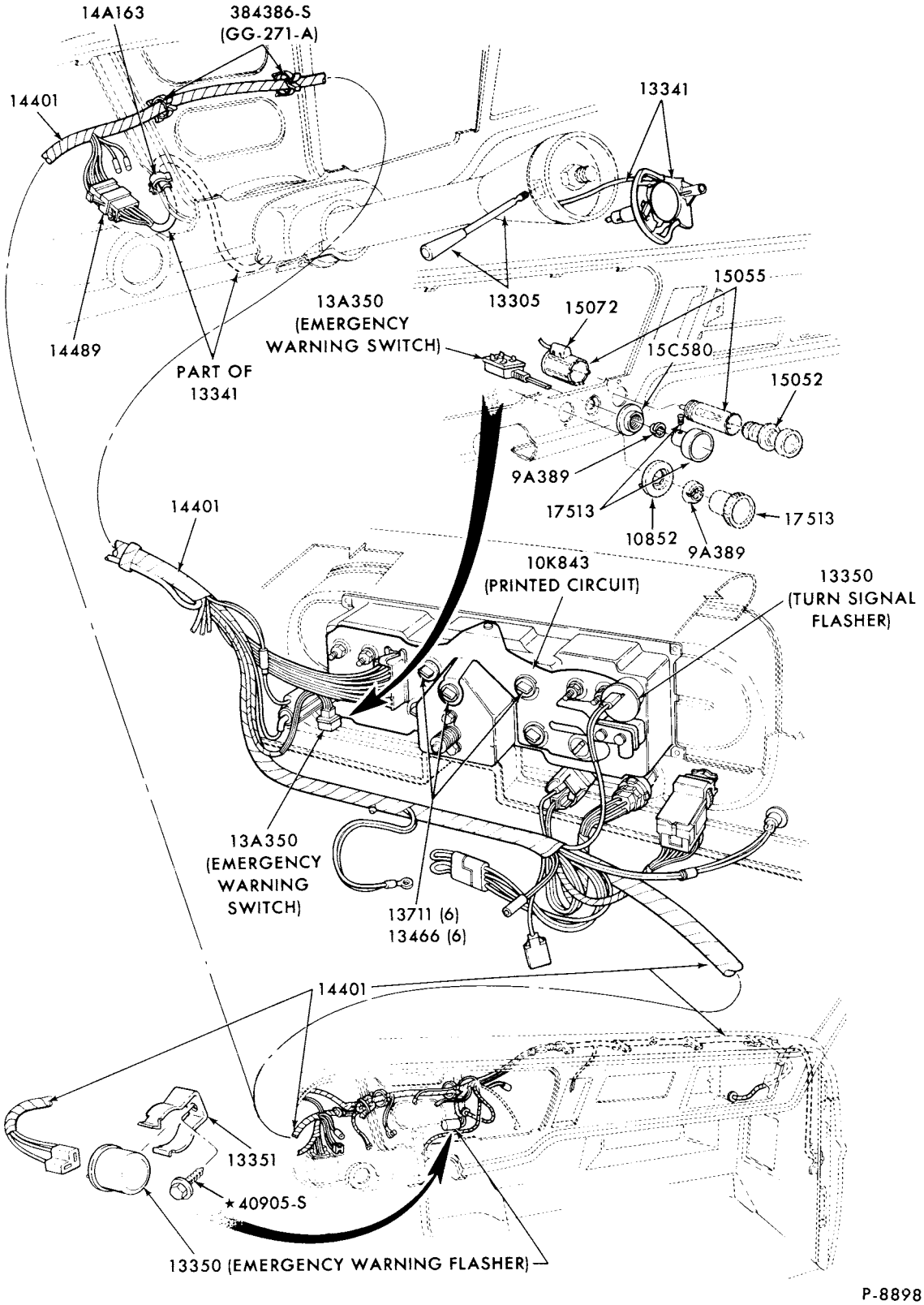

TURN INDICATOR and EMERGENCY FLASHER WARNING SYSTEM
1973/ F100/350

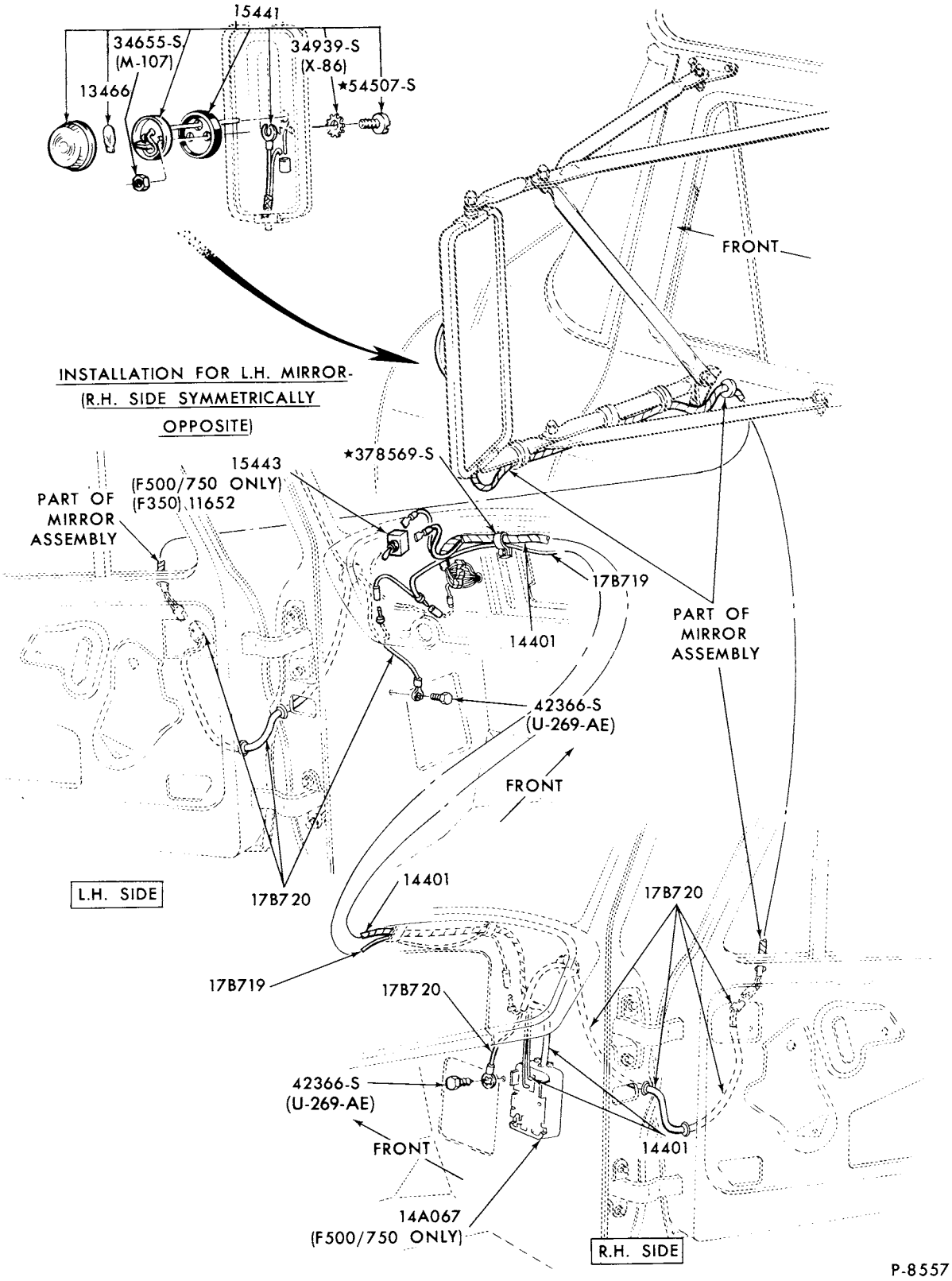

MIRROR MARKER LAMP, WIRING and RELATED PARTS
1973/ F350 and 1973/77 F500

COPYRIGHT © 1979 — FORD MOTOR COMPANY — DEARBORN, MICHIGAN

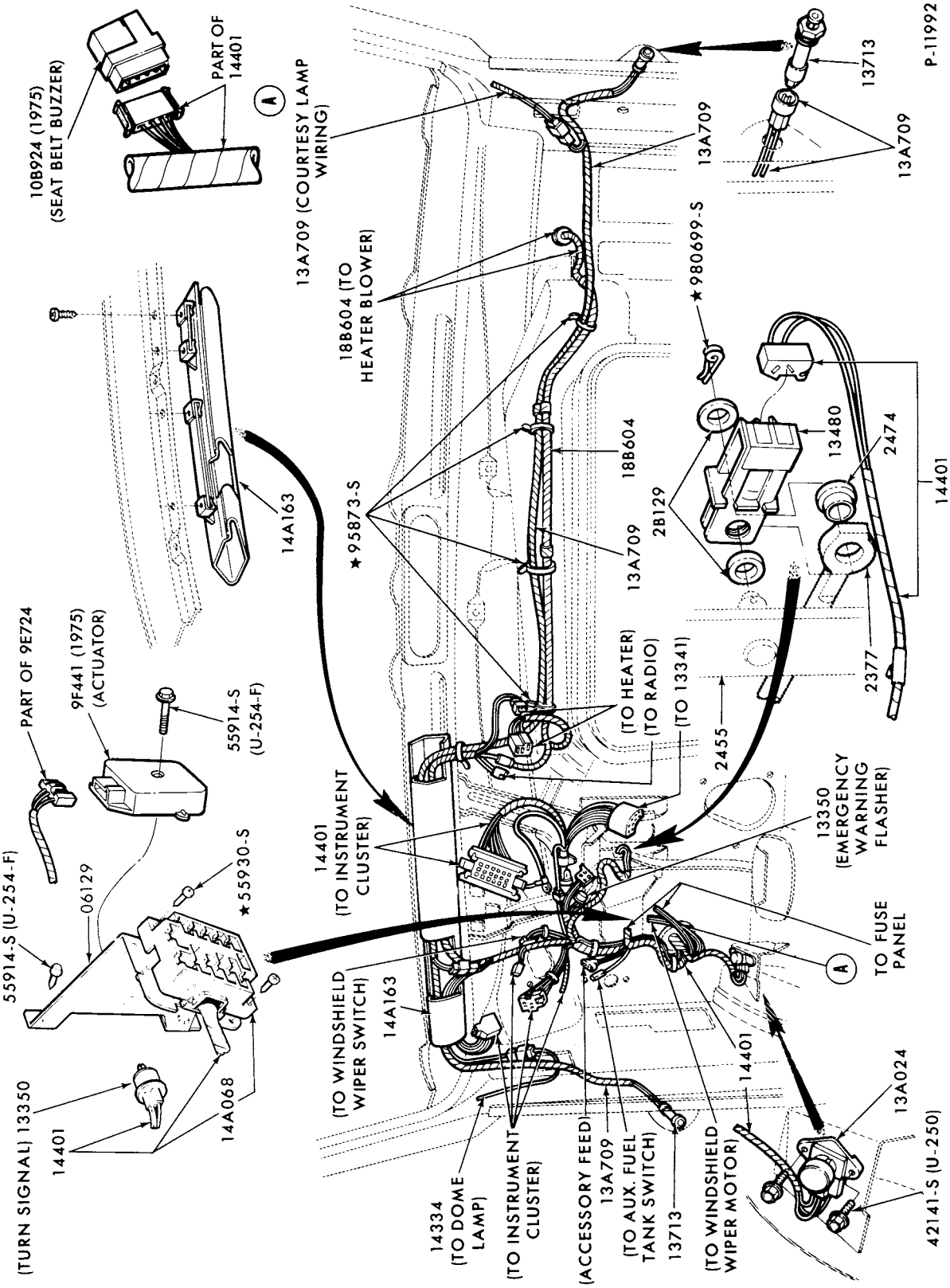

DASH PANEL WIRING and RELATED PARTS
1975 E100/350

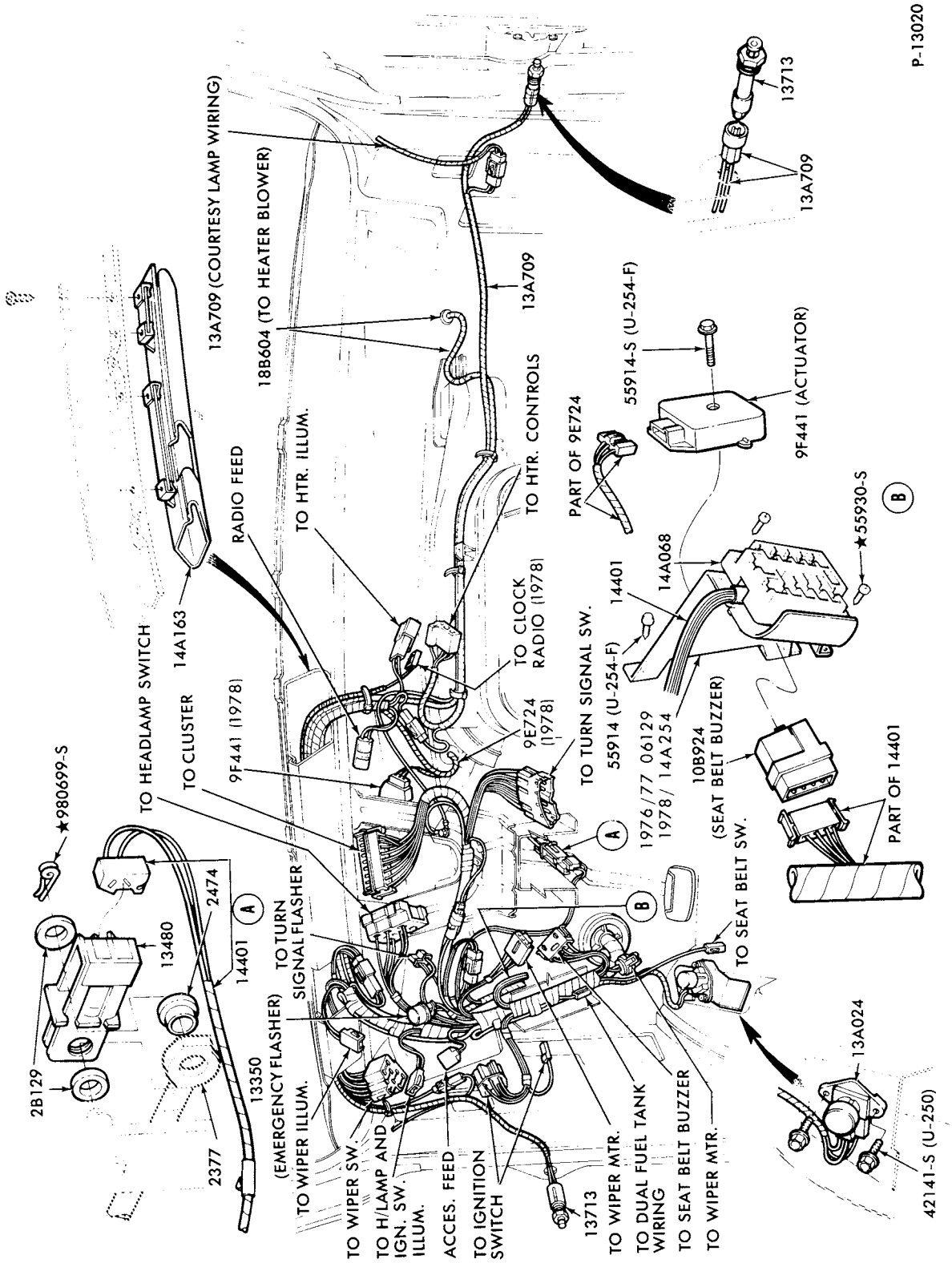

DASH PANEL WIRING and RELATED PARTS (TYPICAL)
1976/ E100/350

COPYRIGHT © 1979-FORD MOTOR-DEARBORN, MICHIGAN
COMPANY

1973/79 TRUCK SERIES 100/500

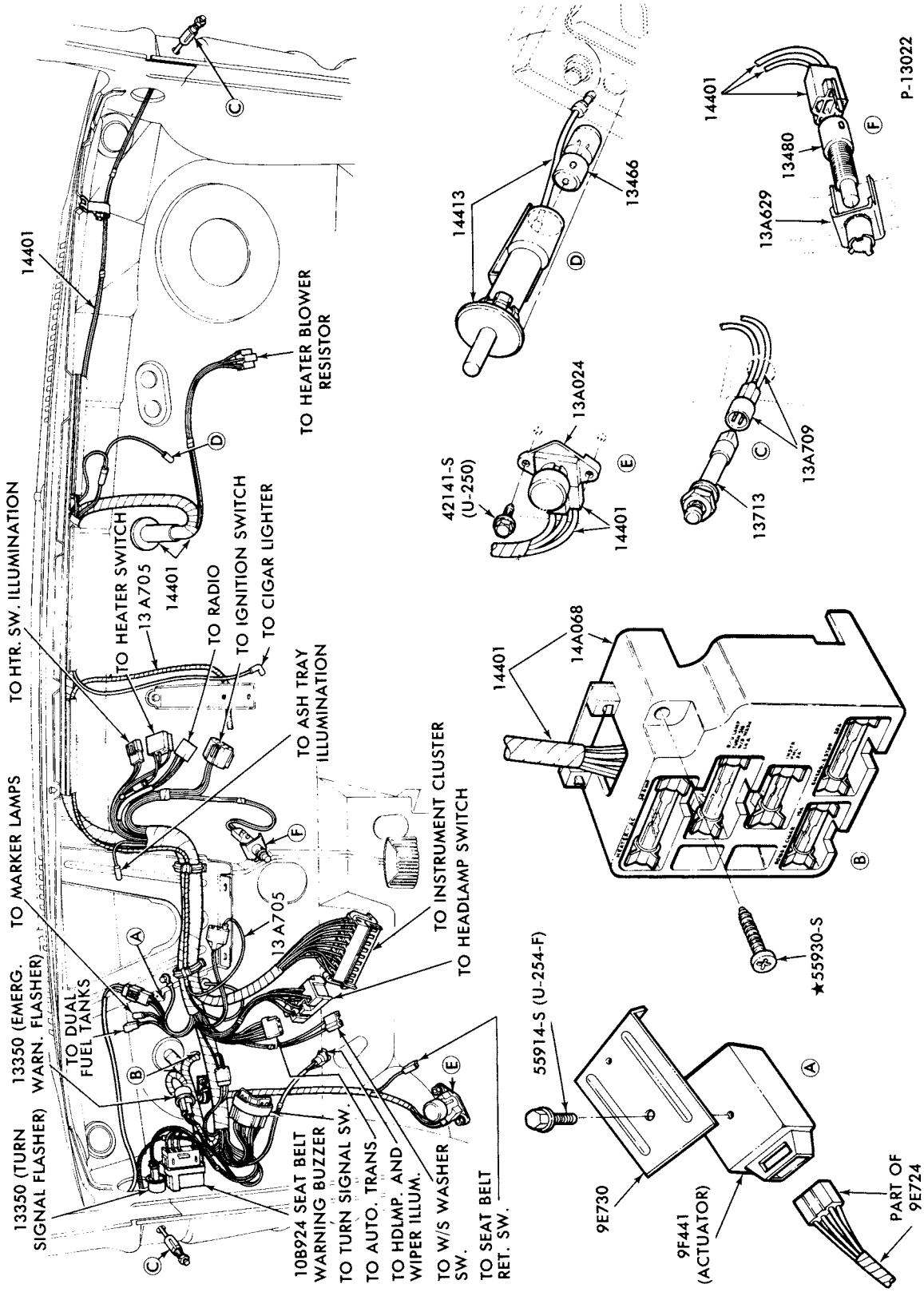

DASH PANEL WIRING and RELATED PARTS
1976/ F100/350-BODY TYPE 81

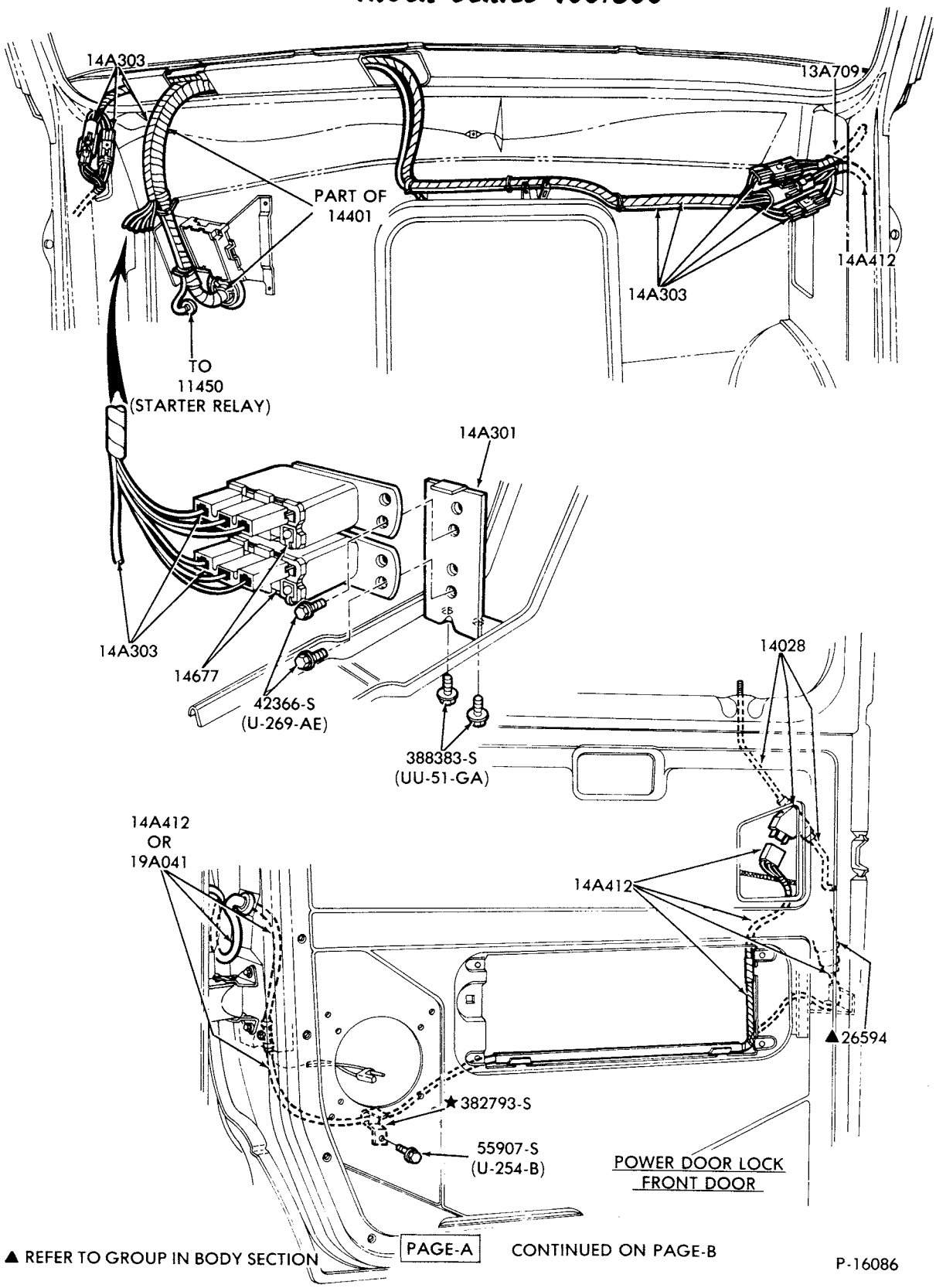

▲ REFER TO GROUP IN BODY SECTION

POWER DOOR LOCK SYSTEM - PAGE A
1979 E100/350

COPYRIGHT © 1980 FORD MOTOR COMPANY, DEARBORN, MICHIGAN

1973/79 TRUCK SERIES 100/500

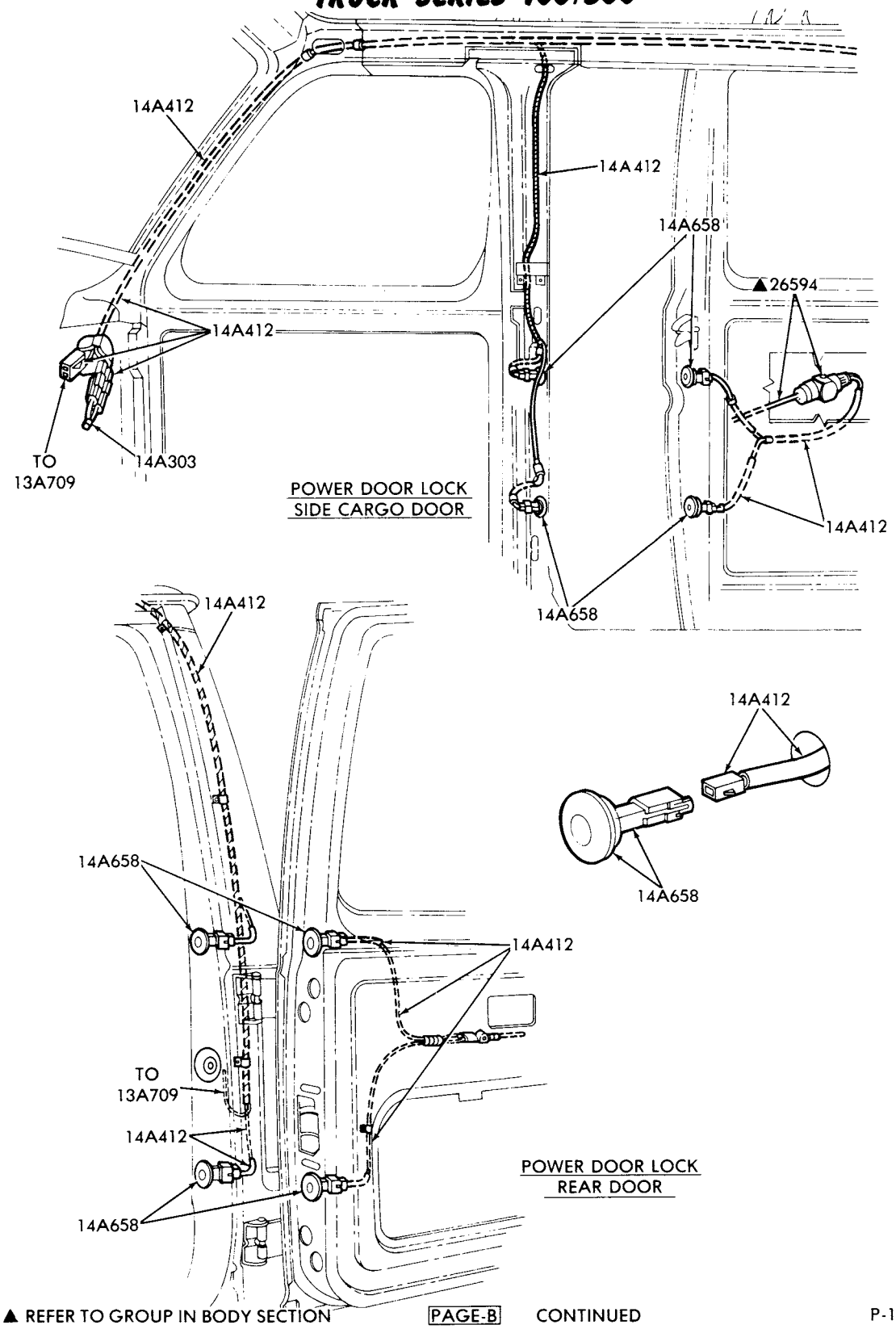

▲ REFER TO GROUP IN BODY SECTION

PAGE-B CONTINUED

P-16087

POWER DOOR LOCK SYSTEM - PAGE B
1979 E100/350

INDEX

INCLUDED IN THIS INDEX ARE THE FOLLOWING MAJOR GROUPS

EXTERIOR MOULDINGS, etc.
FENDERS and RUNNING BOARDS
HOODS
SPLASH SHIELDS

YEAR 19__	TITLE	MODEL	SECTION	PAGE	ILLUS. NO.
	B SERIES				
	FENDERS				
73/77	Fenders and apron sheet metal	All	160	3	P-10218
	HOODS				
73/77	Hood parts	All	160	5	P-10216
	E SERIES				
	FENDERS				
75/	Fenders and apron sheet metal	All	160	6	P-12025
73/	Fender ornamentation	All	•E/M		
75/	Fender ornamentation	All	82	6	P-12024
	HOODS				
73/74	Hood and hood mouldings	All	160	4	P-6329
75/	Hood and related parts - steel	All	160	8	P-14696
79	Hood and related parts - fiberglass	All	160	8	P-14697
75/	Hood latch and related parts - remote control	All	160	5	P-14698
79	Running boards	All	160	10	P-16099
	F SERIES				
	FENDERS and RUNNING BOARDS				
73/76	Fenders and apron sheet metal	F100/350	160	2	P-10215
77/	Fenders and apron sheet metal	F100/350	160	7	P-13121
73/77	Fenders and apron sheet metal	F500	160	3	P-10218
73/	Fender ornamentation	F100/350	•E/M		
73/	Running boards-rear	F100/250(83)	160	1	P-10745
79	Running boards -side	F100/350 (Super Cab)	160	1	P-16098
73/	Hood parts	F100/350	160	9	P-14559
73/77	Hood parts	F500	160	5	P-10216

• Refer to Exterior Moulding Section at the end of text Catalog

COPYRIGHT © 1980 FORD MOTOR COMPANY —DEARBORN, MICHIGAN

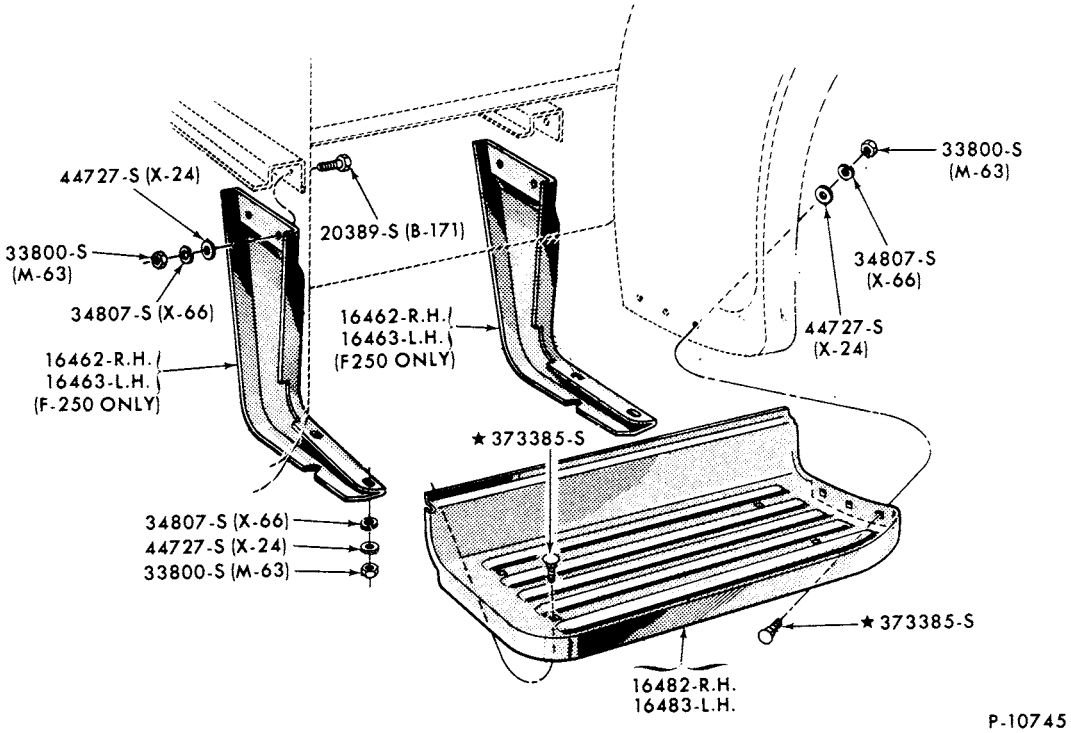

RUNNING BOARDS (REAR)
1973/ F100/250 (83)

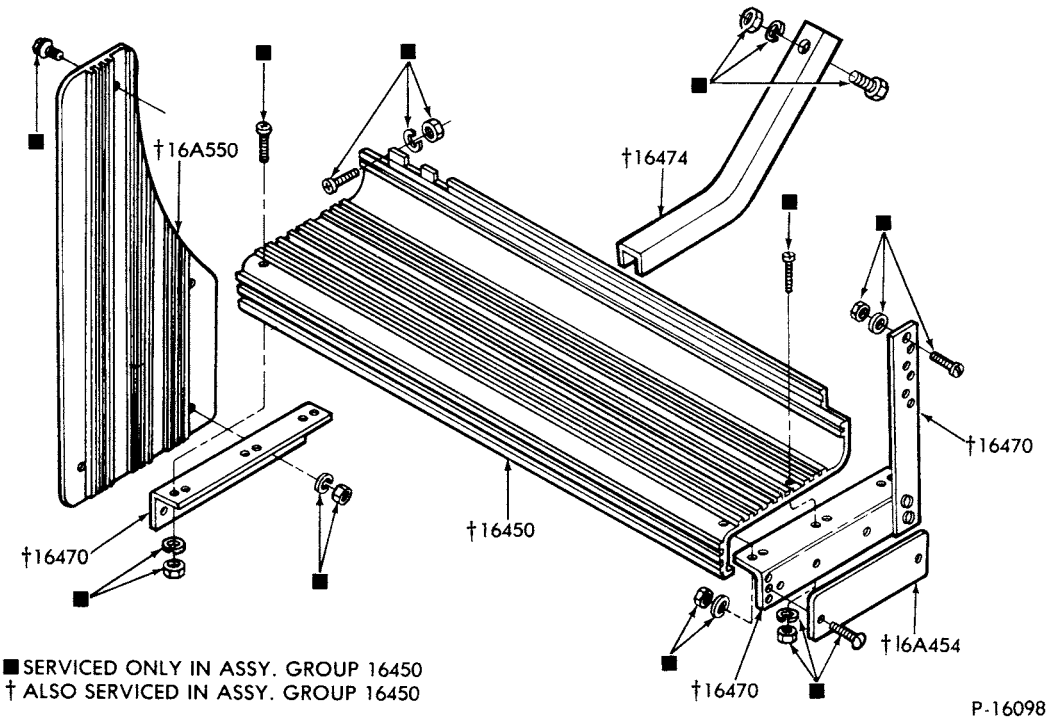

RUNNING BOARDS - (SIDE)
1979 F100/350--SUPER CAB

COPYRIGHT © 1980 FORD MOTOR COMPANY - DEARBORN, MICHIGAN

1973/79 TRUCK SERIES 100/500

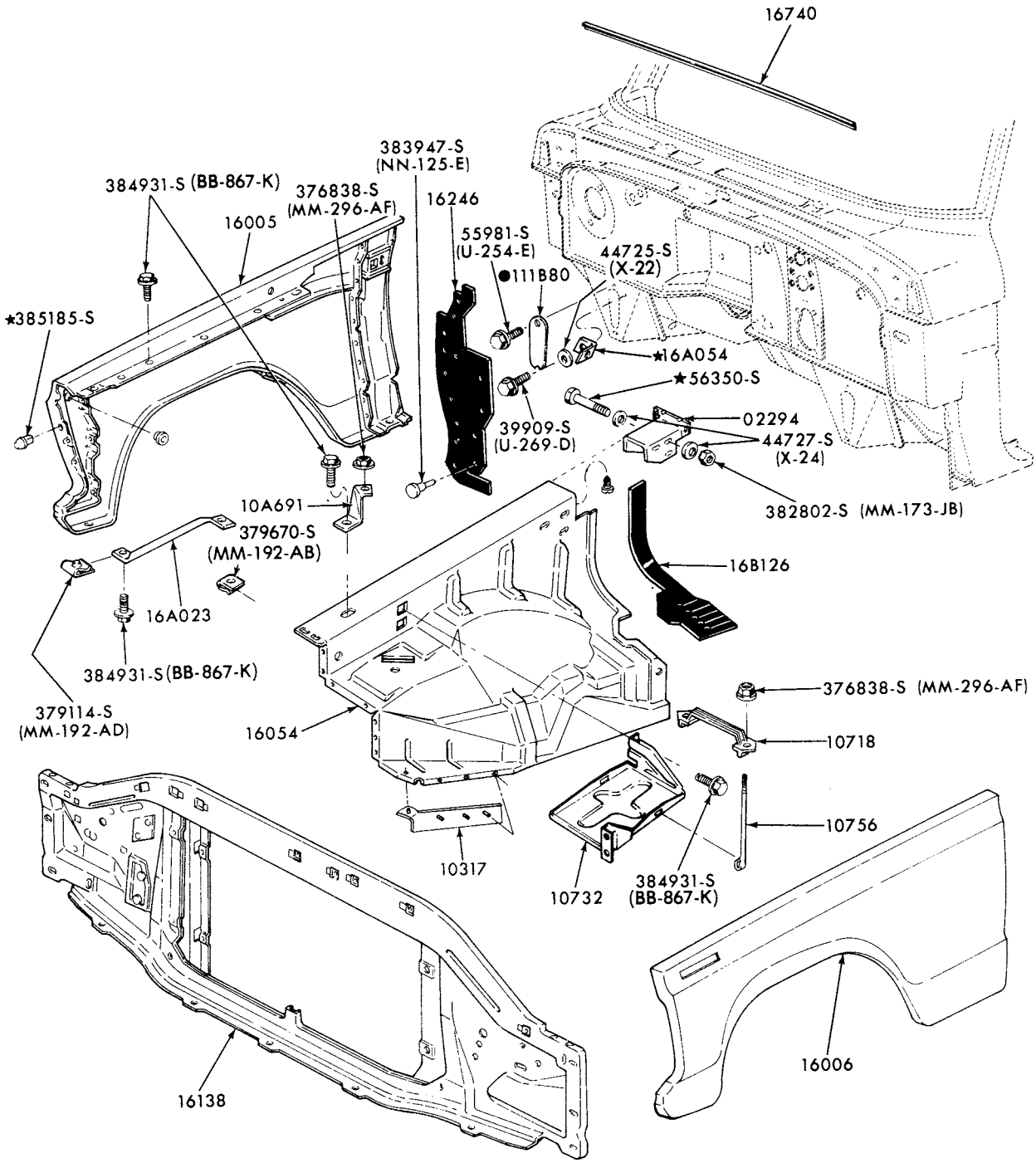

●REFER TO BODY SECTION

P-10215

FENDERS, APRONS and RELATED PARTS
1973/76 F100/350

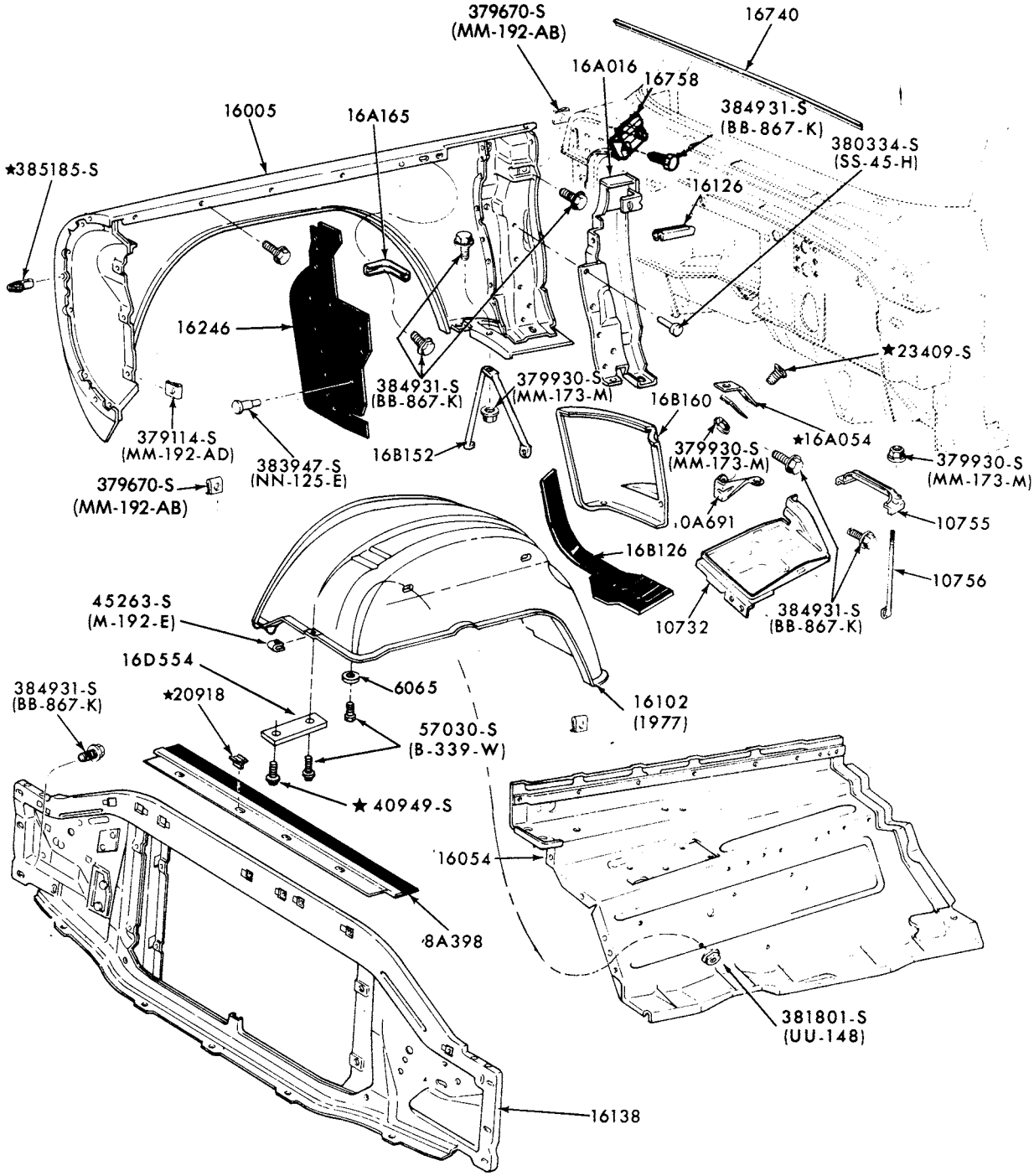

P-10218

FENDERS, APRONS and RELATED PARTS
1973/77 B-F500

COPYRIGHT © 1980 -FORD MOTOR-DEARBORN, MICHIGAN COMPANY

P-6329

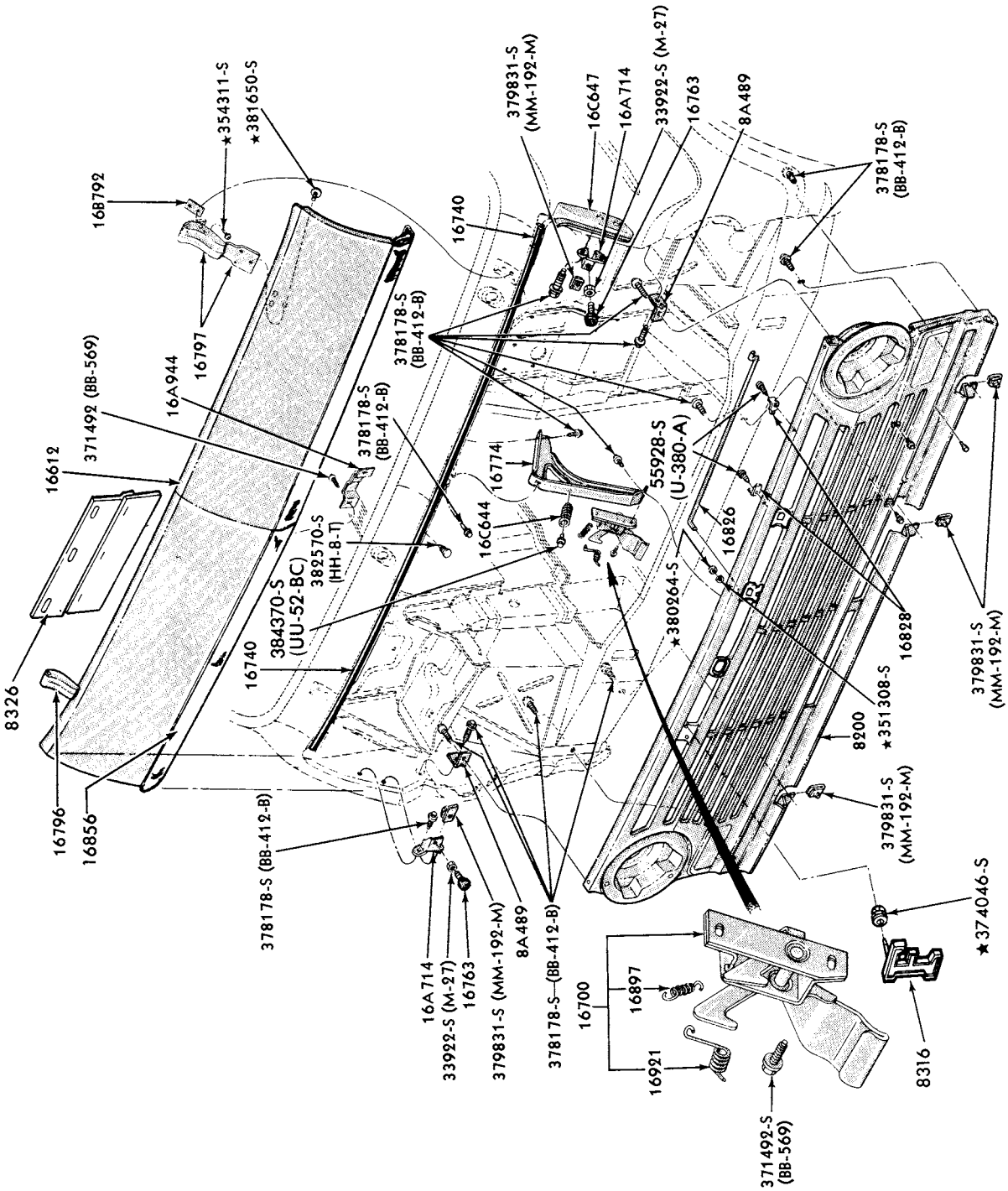

HOOD and GRILLE PARTS
1973/74 E100/300

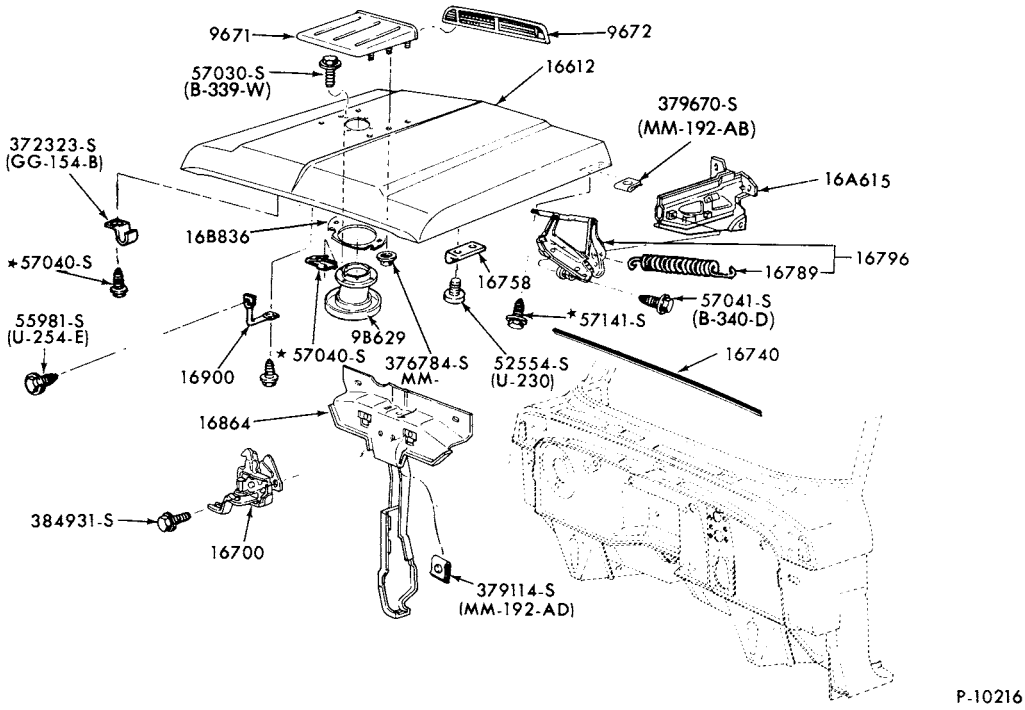

HOOD and RELATED PARTS
1973/77 B-F500

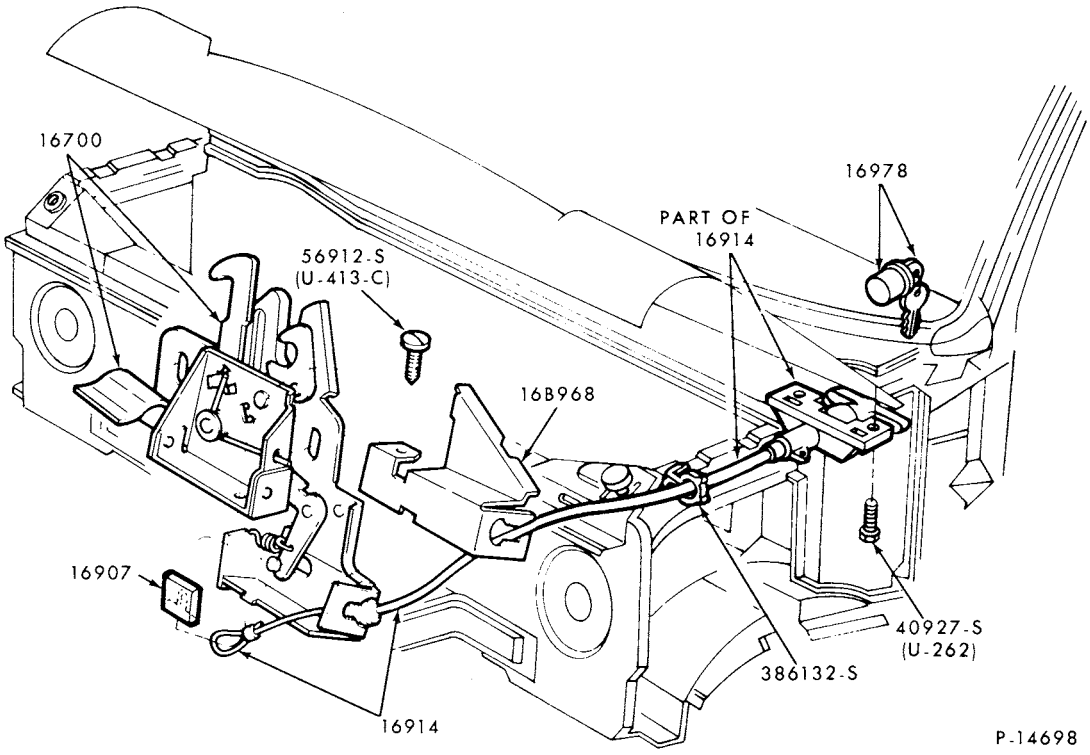

HOOD LATCH and RELATED PARTS (REMOTE CONTROL)
1975/79 E100/350

COPYRIGHT © 197. FORD MOTOR COMPANY - DEARBORN, MICHIGAN

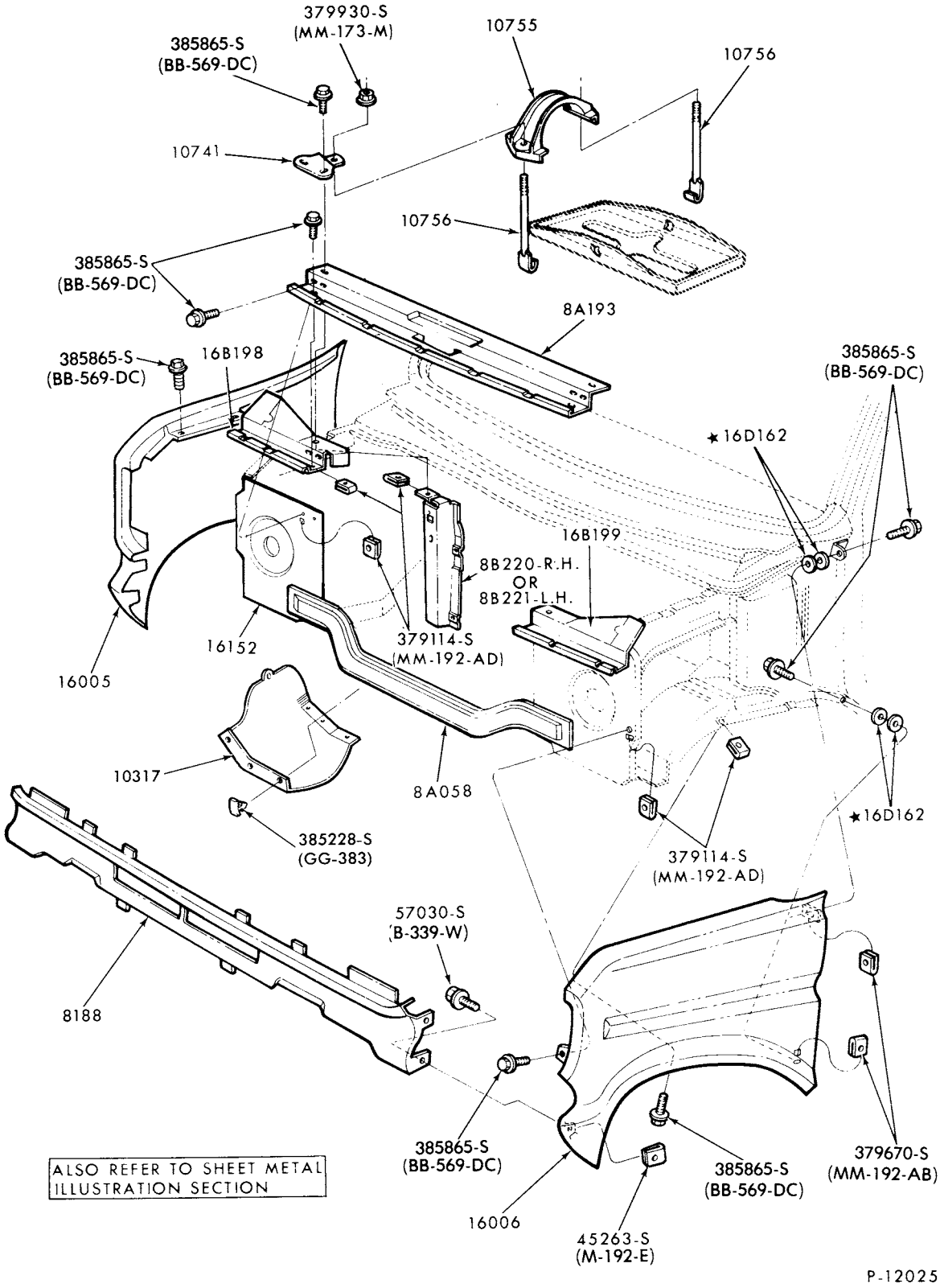

FENDERS, APRONS and RELATED PARTS
1975/79 E100/350

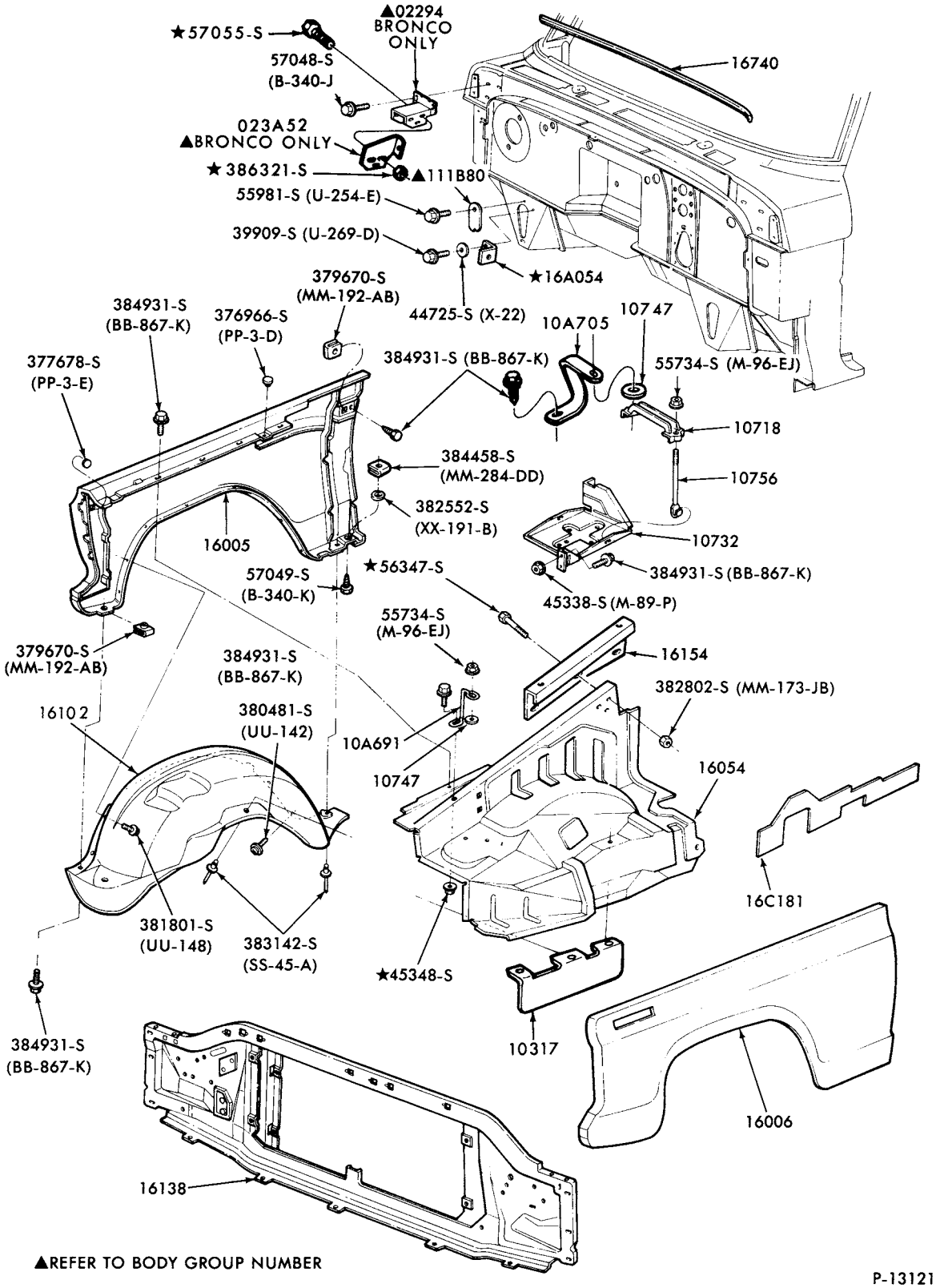

FENDERS, APRONS and RELATED PARTS
1977/79 F100/350

COPYRIGHT © 1979 FORD MOTOR COMPANY, DEARBORN, MICHIGAN

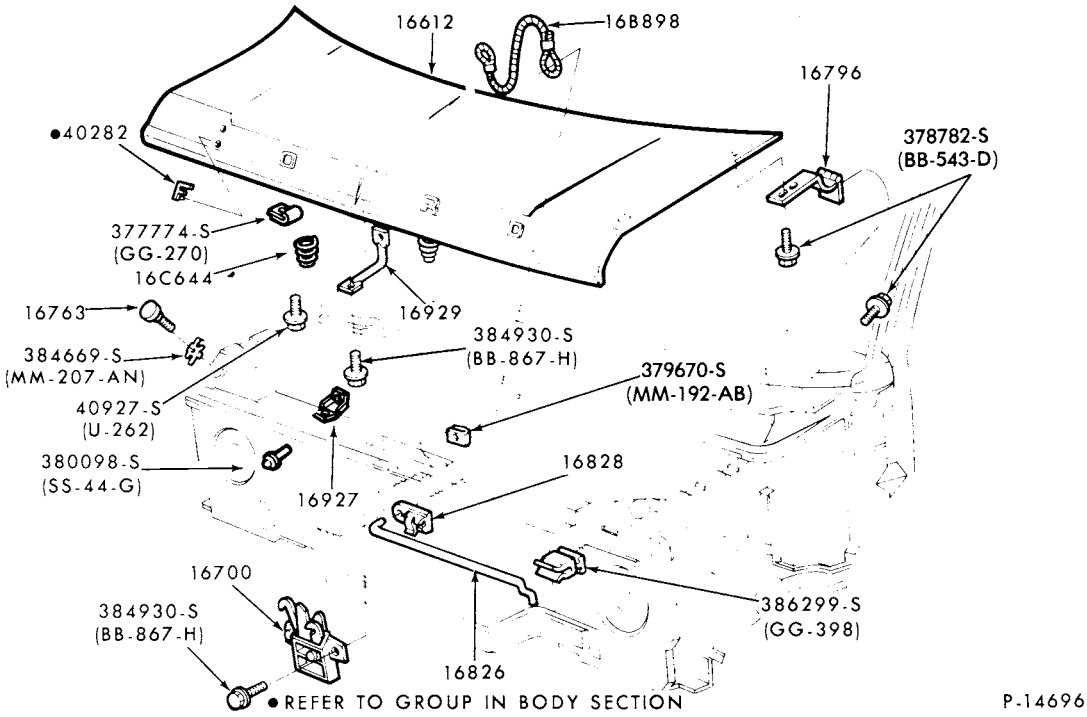

HOOD and RELATED PARTS (STEEL)
1975/79 E100/350

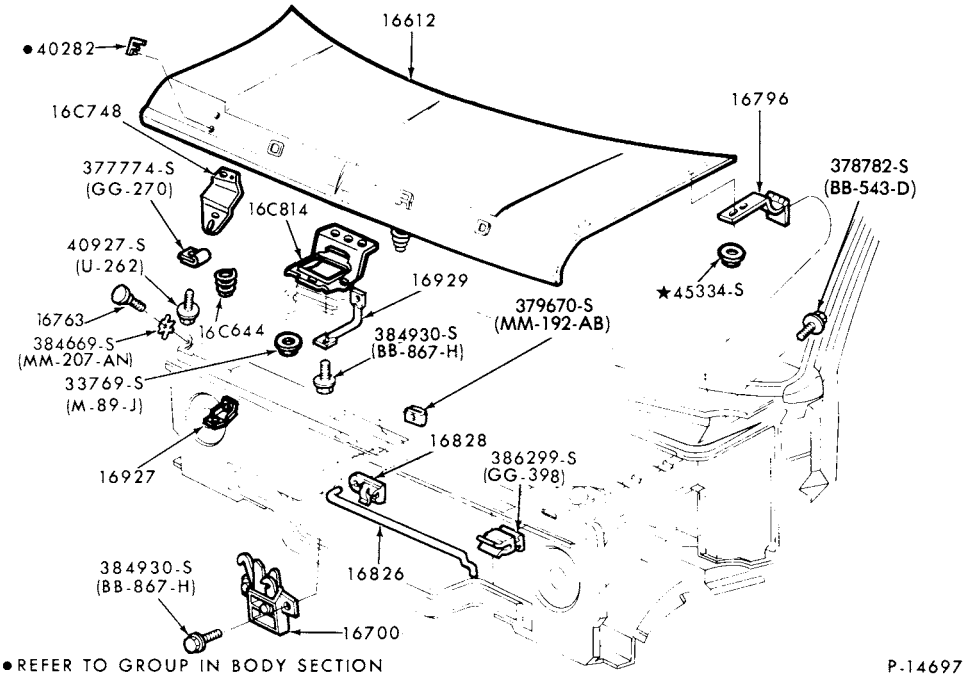

HOOD and RELATED PARTS (FIBERGLASS)
1979 E100/350

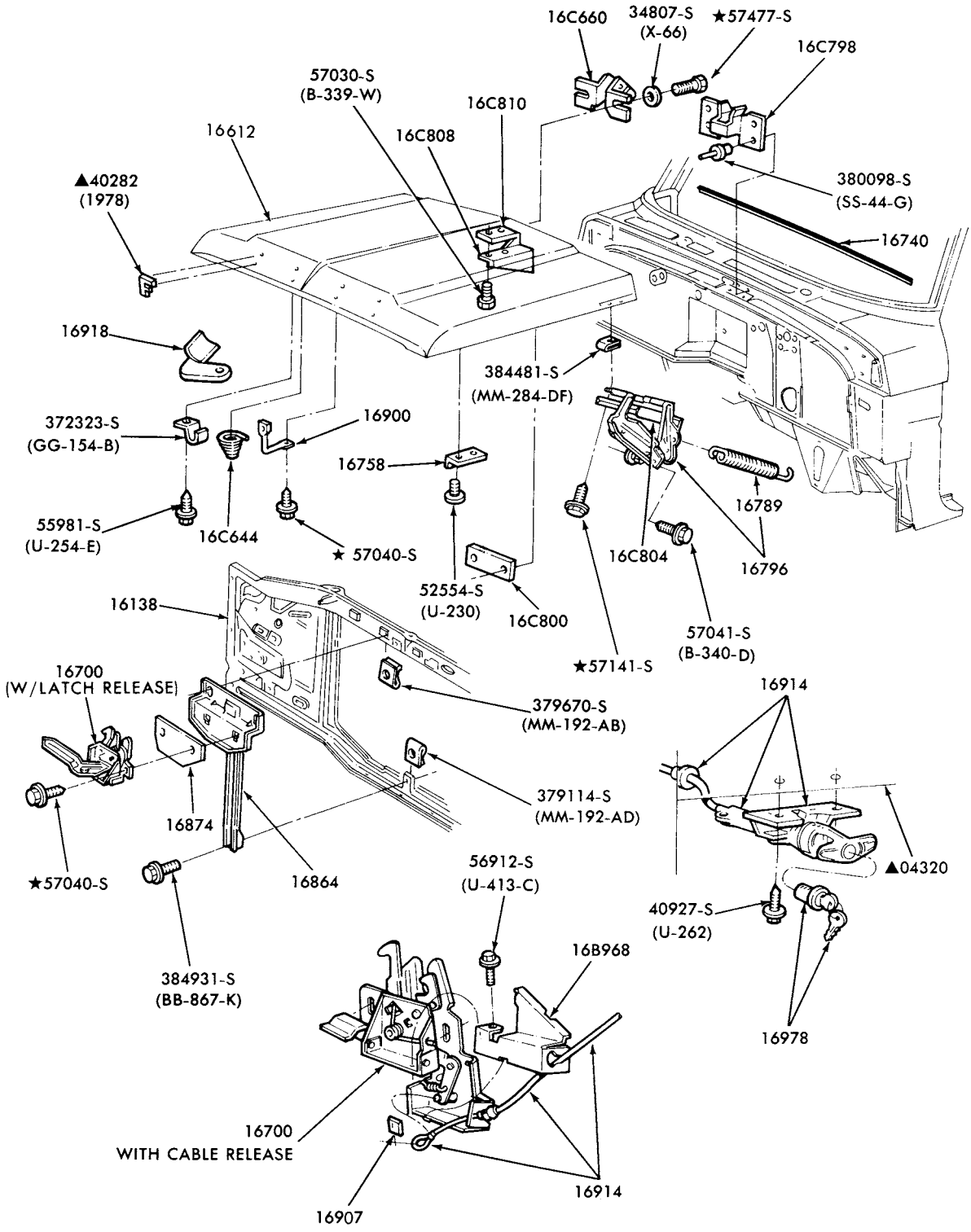

▲REFER TO GROUP IN BODY SECTION

P-14559

HOOD and RELATED PARTS
1973/ F100/350

COPYRIGHT © 1980— FORD MOTOR COMPANY —DEARBORN, MICHIGAN

1973/79 TRUCK SERIES 100/500

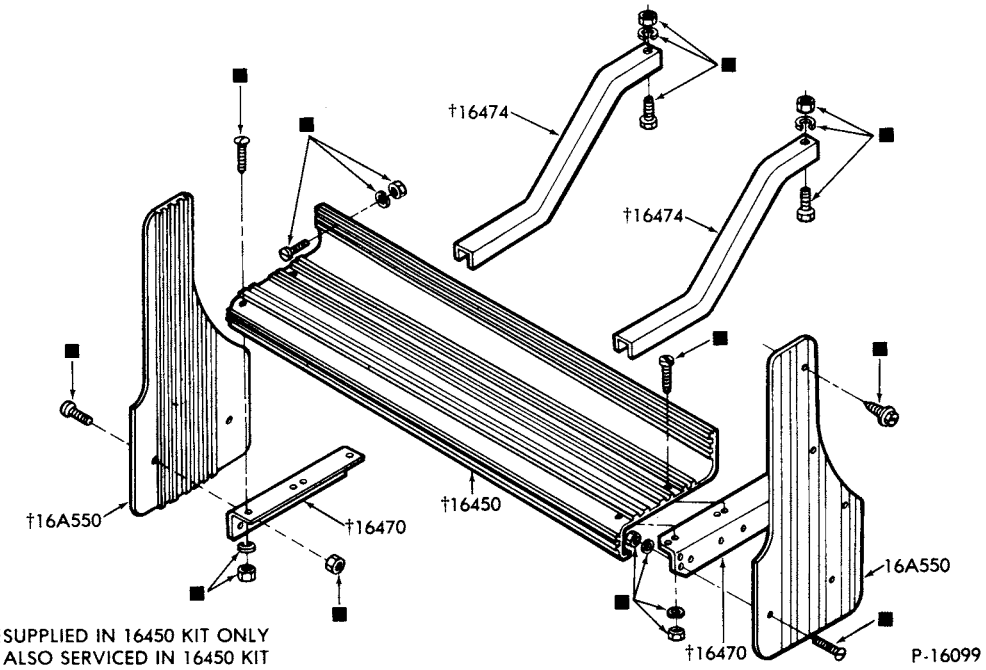

RUNNING BOARDS
1979 E100/350

INDEX

INCLUDED IN THIS INDEX ARE THE FOLLOWING MAJOR GROUPS

BUMPERS
MIRRORS
SPEEDOMETER CABLES
TOW HOOKS
WIPERS and WASHERS

YEAR 19__	TITLE	MODEL	SECTION	PAGE	ILLUS. NO.
	B SERIES				
	BUMPERS				
73/77	Bumper parts (front)	All	50	1	P-11999
	TOW HOOKS				
73/77	Tow hooks	All	176	4	P-6736
	E SERIES				
	BUMPERS				
73/74	Front bumper parts	All	176	1	P-6333
73/74	Rear bumper parts	All	176	2	P-6334
75/77	Front bumper parts	All	176	6	P-12017
78/	Front bumper parts	All	176	8	P-14694
75/	Rear bumper parts-w/o step bumper	All	176	6	P-12018
77/	Rear bumper parts-w/ step bumper	All	176	5	P-13339
	MIRRORS				
73/74	Mirror-inside	E100/350	030	9	P-13023
73/	Mirror-outside (Western Jr. swing lock-high profile)	E100/350	176.1	1	P-10470
73/	Mirror-outside (Western Jr. swing lock-high profile)	E100/350	176.1	1	P-10469
73/	Mirror-outside (diminishing)	E100/350	176.1	2	P-10468
73/	Mirror-outside (5"x 8" type)	E100/350	176.1	4	P-10463
73/	Mirror-outside (Western Jr. swing lock-low profile)	E100/350	176.1	6	P-10461
75/	Mirror-outside (Goose Neck-low profile)	E100/350	176.1	6	P-12644
75/	Mirror-outside (Swing Lock-top mounted-low profile)	E100/350	176.1	7	P-12700
	SPEEDOMETER CABLES				
73/74	Speedometer cables	E100/350	175	8	P-11584
75/	Speedometer cables	E100/350(83,89)	175	10	P-11637
	WIPERS and WASHERS				
73/74	Windshield wiper motor parts	All	175	1	P-4929
73/74	Windshield wiper and washer parts	All	175	3	P-6454
75/	Windshield wiper and washer parts	All	175	9	P-12063
	F SERIES				
	BUMPERS				
73/77	Bumper parts (front)	F100 and F250--2/W/D	176	1	P-10222
73/77	Bumper parts (front)	F500	50	1	P-11999
73/	Rear step bumper parts	F100/350(99)	176	4	P-10221
73/	Rear bumper parts	F100/350(99)--w/o step	176	3	P-10220
73/77	Bumper parts (front)	F250--4/W/D, F350	176	2	P-10223
73/	Bumper parts (rear)	F100/250(83)	176	3	P-10219
78/	Bumper parts (front)	F100/350	176	7	P-14017

COPYRIGHT © 1980 - FORD MOTOR COMPANY —DEARBORN, MICHIGAN

INDEX

YEAR 19__	TITLE	MODEL	SECTION	PAGE	ILLUS. NO.
	F SERIES				
	MIRRORS				
73/	Mirror-inside	F100/350	030	1	P-10229
73/77	Mirror-inside	F500	030	1	P-10229
73/	Mirror-outside (Western Jr. swing lock-low profile)	F100/350	176.1	2	P-10467
73/	Mirror-outside (diminishing)	F100/350	176.1	2	P-10468
73/77	Mirror-outside (diminishing)	F500	176.1	2	P-10468
73/	Mirror-outside (non-telescoping)	F100/350	176.1	3	P-10465
73/77	Mirror-outside (non-telescoping)	F500	176.1	3	P-10465
73/	Mirror-outside (Western Jr. camper)	F100/350	176.1	3	P-10466
73/	Mirror-outside (Western Jr. -high profile)	F100/350	176.1	4	P-10464
73/	Mirror-outside (remote control)	F100/350	176.1	5	P-8641
73/	Mirror-outside (large Western)	F100/350	176.1	5	P-10460
73/77	Mirror-outside (large Western)	F500	176.1	5	P-10460
73/	Mirror-marker lamp wiring	F350	145.1	9	P-8557
73/77	Mirror-marker lamp wiring	F500	145.1	9	P-8557
75/	Mirror-outside (Swing Lock-top mounted-low profile)	F100/350	176.1	7	P-12700
75/	Mirror-outside (Goose neck-low profile)	F100/350	176.1	6	P-12644
	SPEEDOMETER CABLES				
73/77	Speedometer and tachometer cables	F500	175	1	P-11575
73/	Speedometer cables	F100/350--2/W/D	175	7	P-11581
73/	Speedometer cables (M/T)	F100/250--4/W/D	175	7	P-11582
74/	Speedometer cables (A/T)	F100/250--4/W/D	175	11	P-11636
77/	Speedometer cables with speed control sensor	F100/250--4/W/D	175	12	P-14371
	TOW HOOKS				
73/77	Tow hooks	F500	176	4	P-6736
	WIPERS and WASHERS				
73	Windshield washer parts	F100/350--w/Power Pac	175	4	P-8709
73/77	Bumper parts (front)	P500	176	5	P-11469
73/	Windshield washer parts	F100/350--w/o Power Pac	175	5	P-10200
73/	Windshield wiper parts	F100/350	175	2	P-10199
73/77	Windshield wiper parts	F500	175	2	P-10199
73/	Windshield wiper motor parts	All	175	1	P-4929
73/77	Windshield washer parts	F500	175	6	P-10233
	P SERIES				
	BUMPERS				
73/77	Bumper parts (front)	P350/500	176	5	P-11469

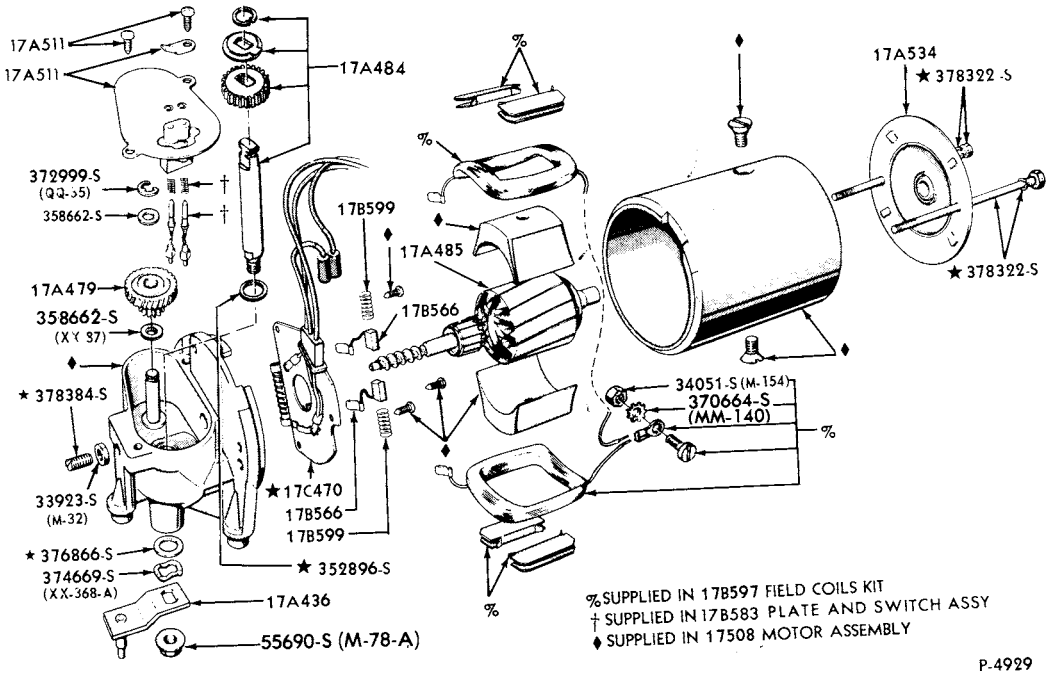

WINDSHIELD WIPER MOTOR PARTS
1973/74 E100/300
1973/ F100/350 and 1973/77 F500

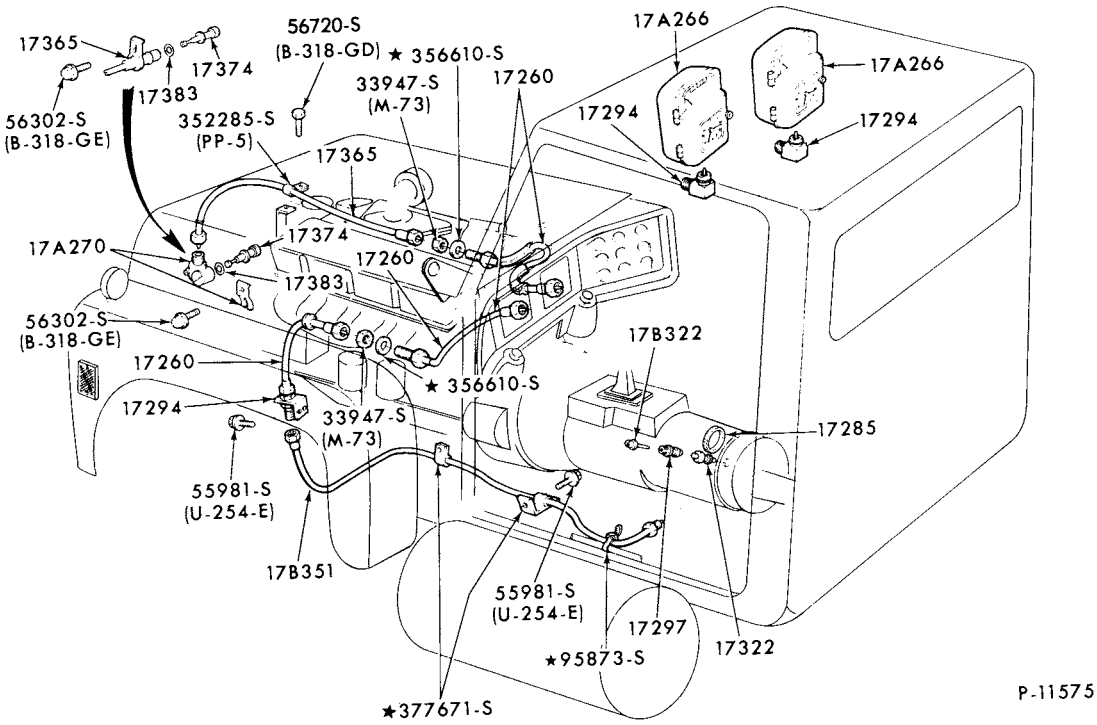

SPEEDOMETER and TACHOMETER CABLES
1973/77 F500

COPYRIGHT © 1979 FORD MOTOR-DEARBORN, MICHIGAN COMPANY

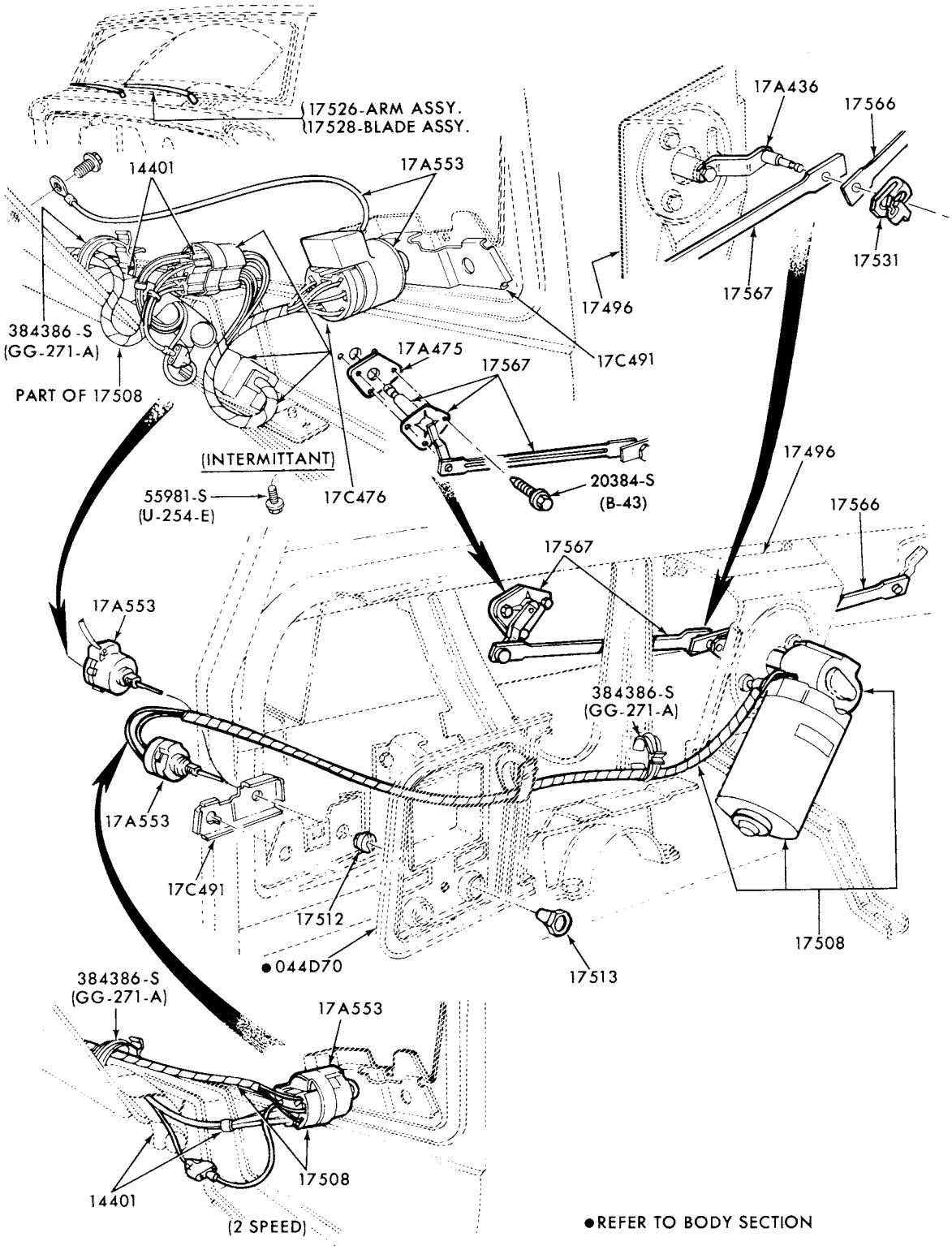

P-10199

WINDSHIELD WIPER, CONTROLS and RELATED PARTS
1973/ F100/350 and 1973/77 F500

P-6454

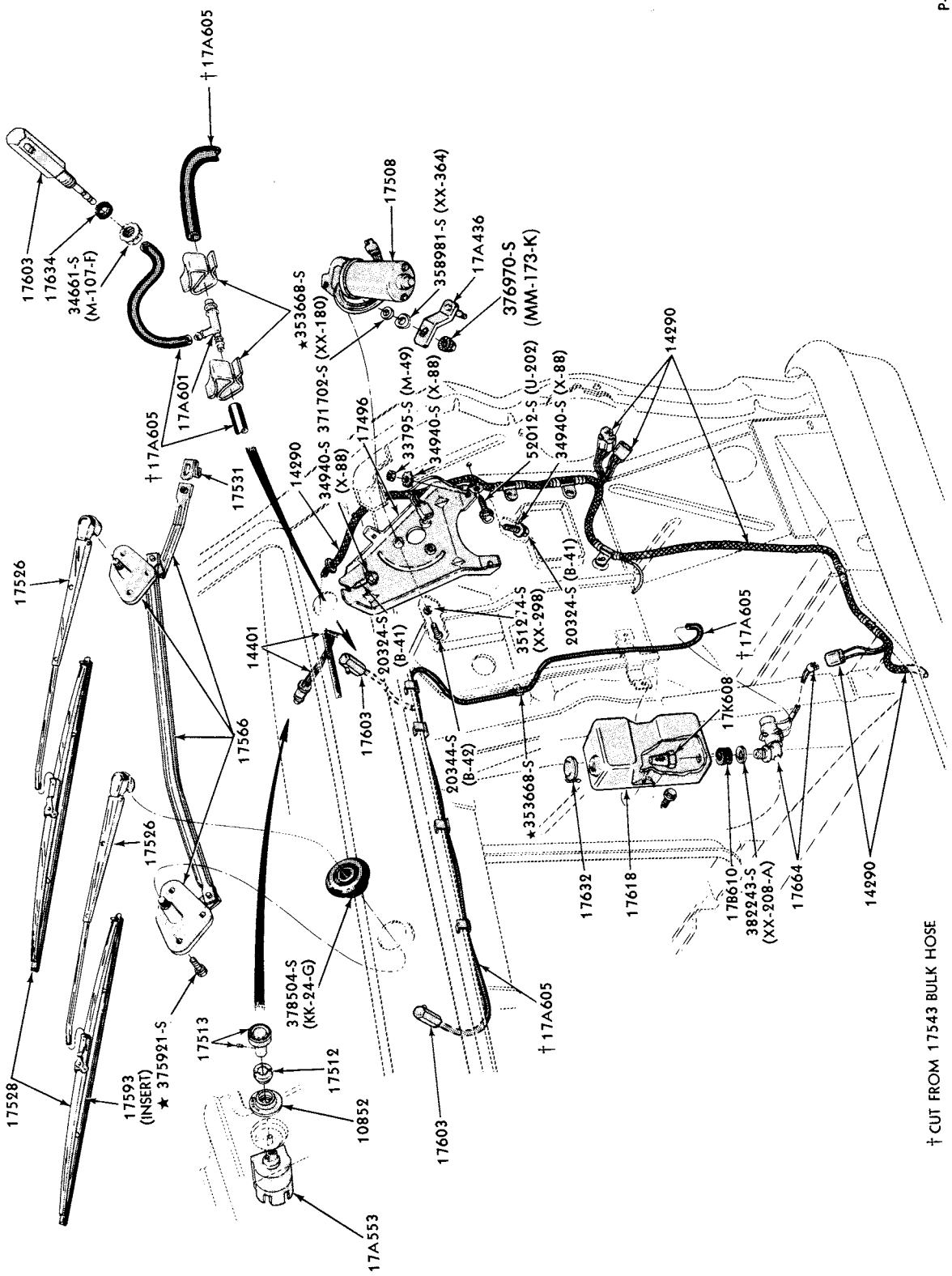

† CUT FROM 17543 BULK HOSE

WINDSHIELD WIPER and WASHER PARTS
1973/74 E100/300

COPYRIGHT © 1979 FORD MOTOR COMPANY—DEARBORN, MICHIGAN

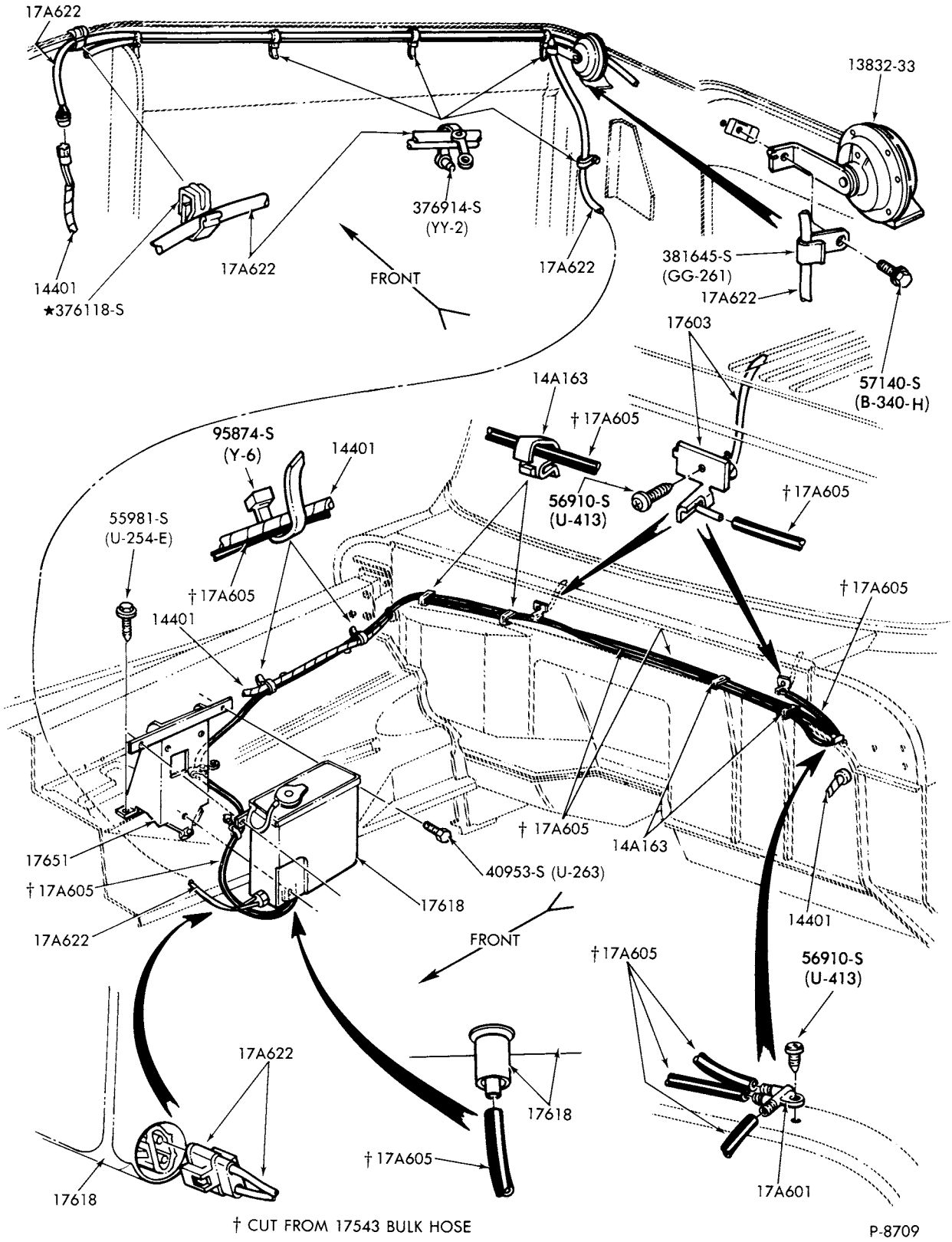

† CUT FROM 17543 BULK HOSE

P-8709

WINDSHIELD WASHER PARTS
1973 F100/350--w/POWER PAC

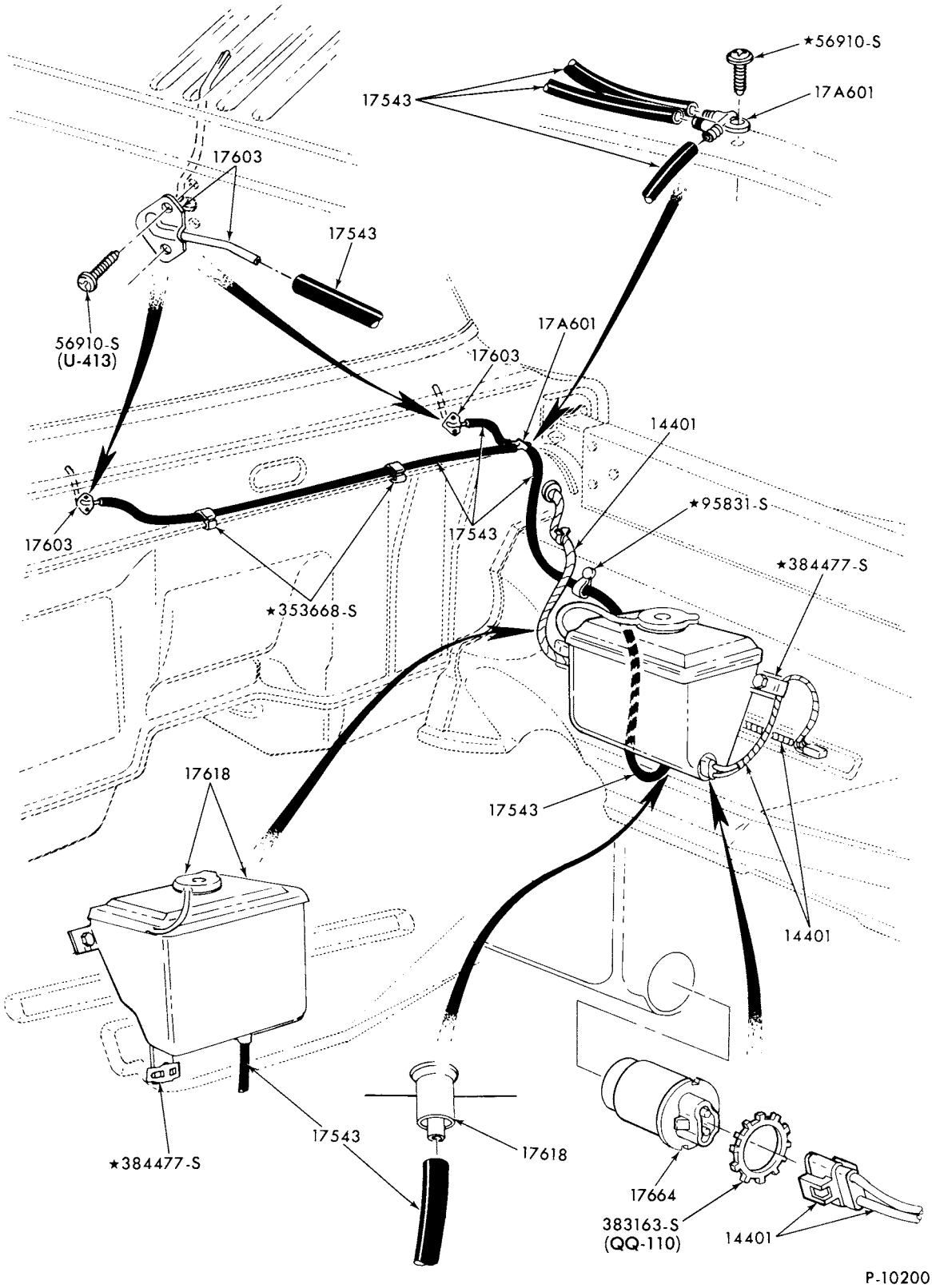

WINDSHIELD WASHER PARTS
1973/ F100/350--w/o POWER PAC

COPYRIGHT © 1979 - FORD MOTOR-DEARBORN, MICHIGAN COMPANY

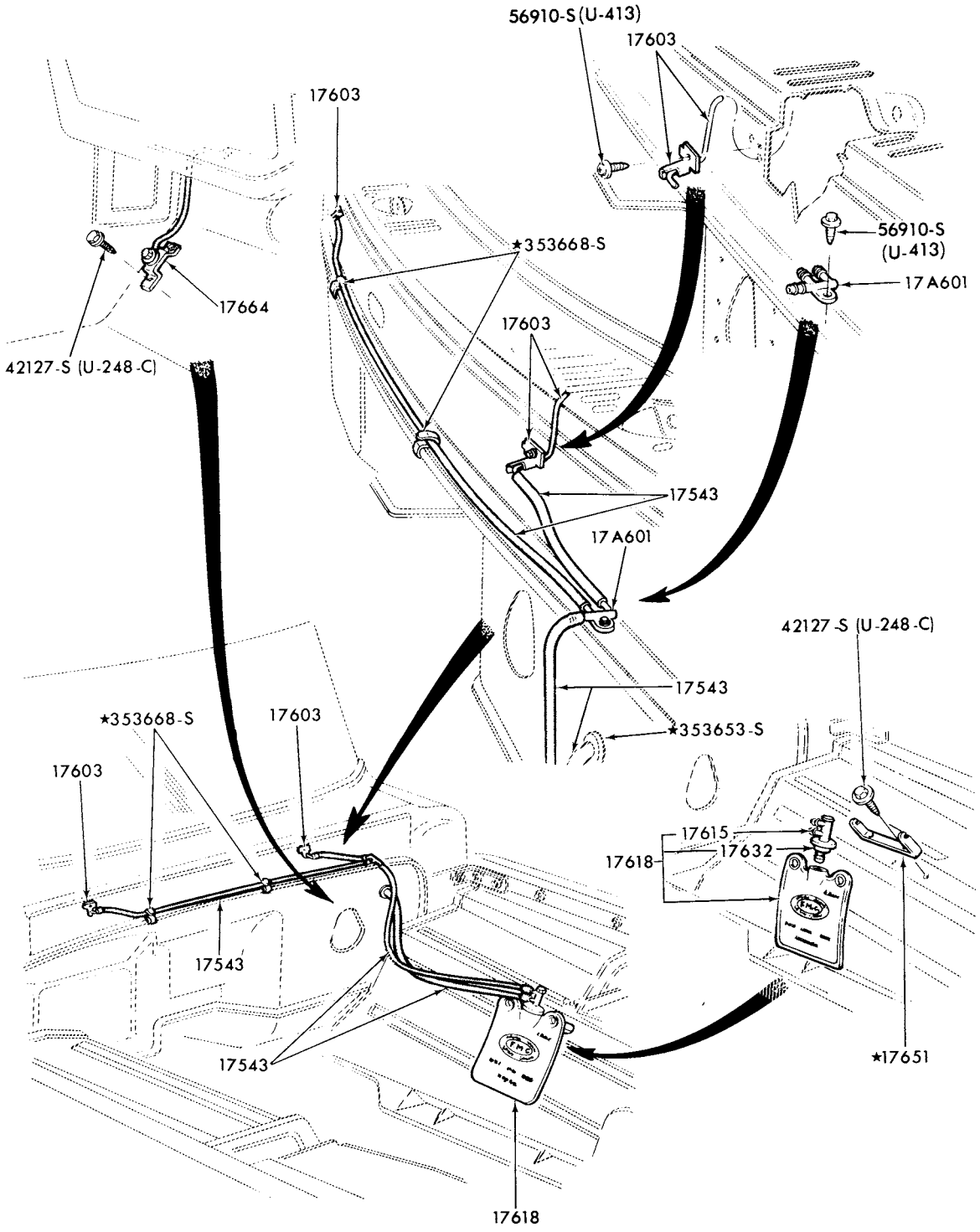

P-10233

WINDSHIELD WASHER PARTS
1973/77 F500

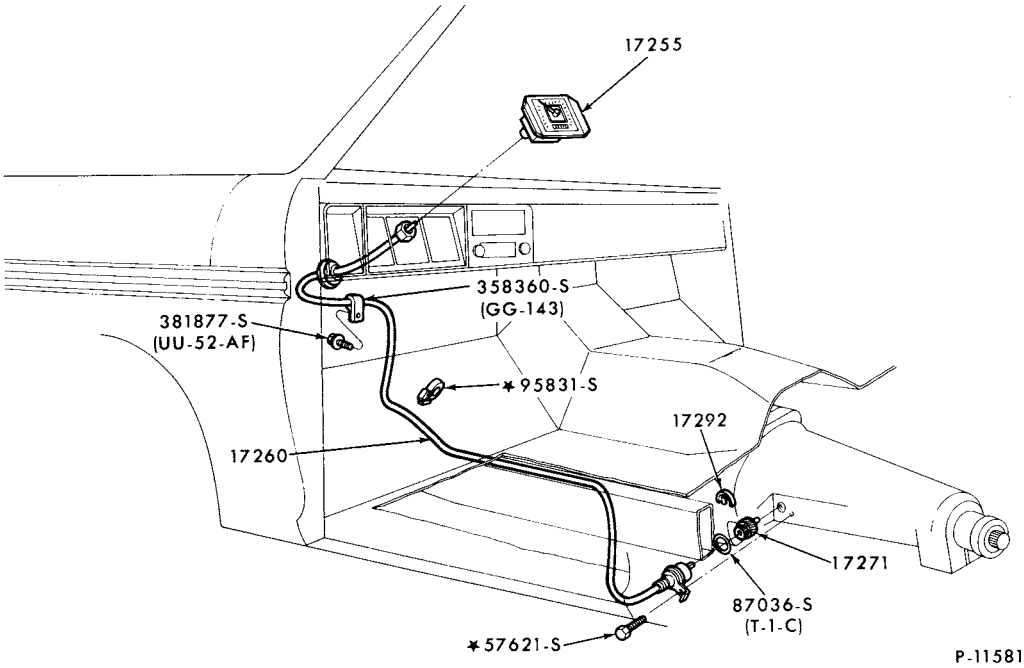

SPEEDOMETER CABLES
1973/79 F100/350--2/W/D

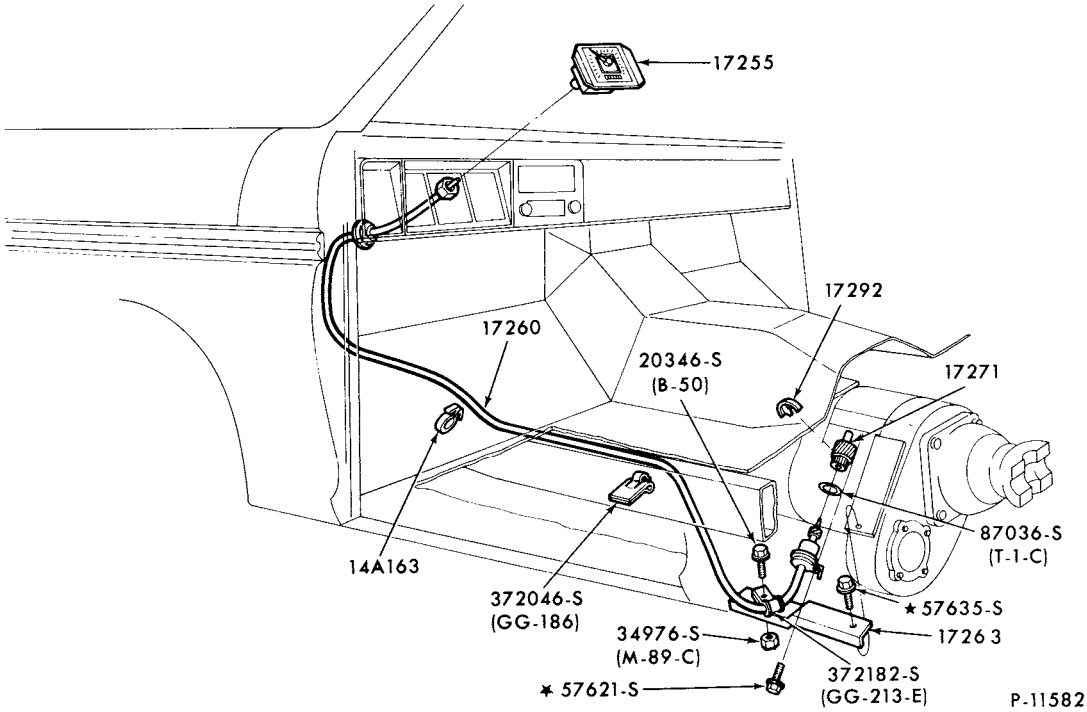

SPEEDOMETER CABLES
1973/79 F100/250--4/W/D and M/T

COPYRIGHT © 1979 FORD MOTOR COMPANY DEARBORN, MICHIGAN

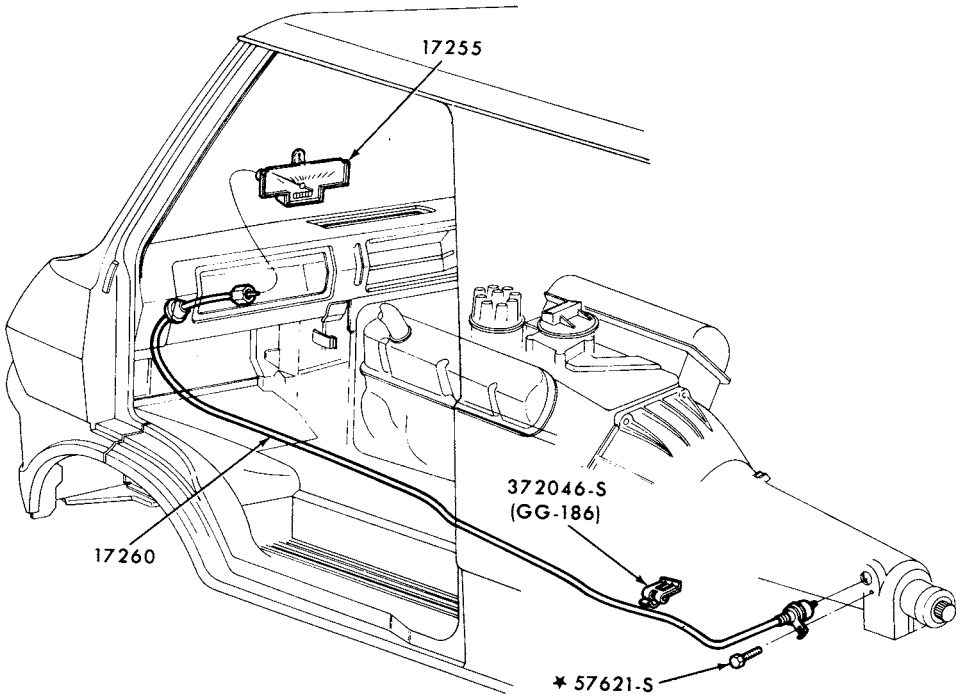

P-11584

SPEEDOMETER CABLES
1973/74 E100/300

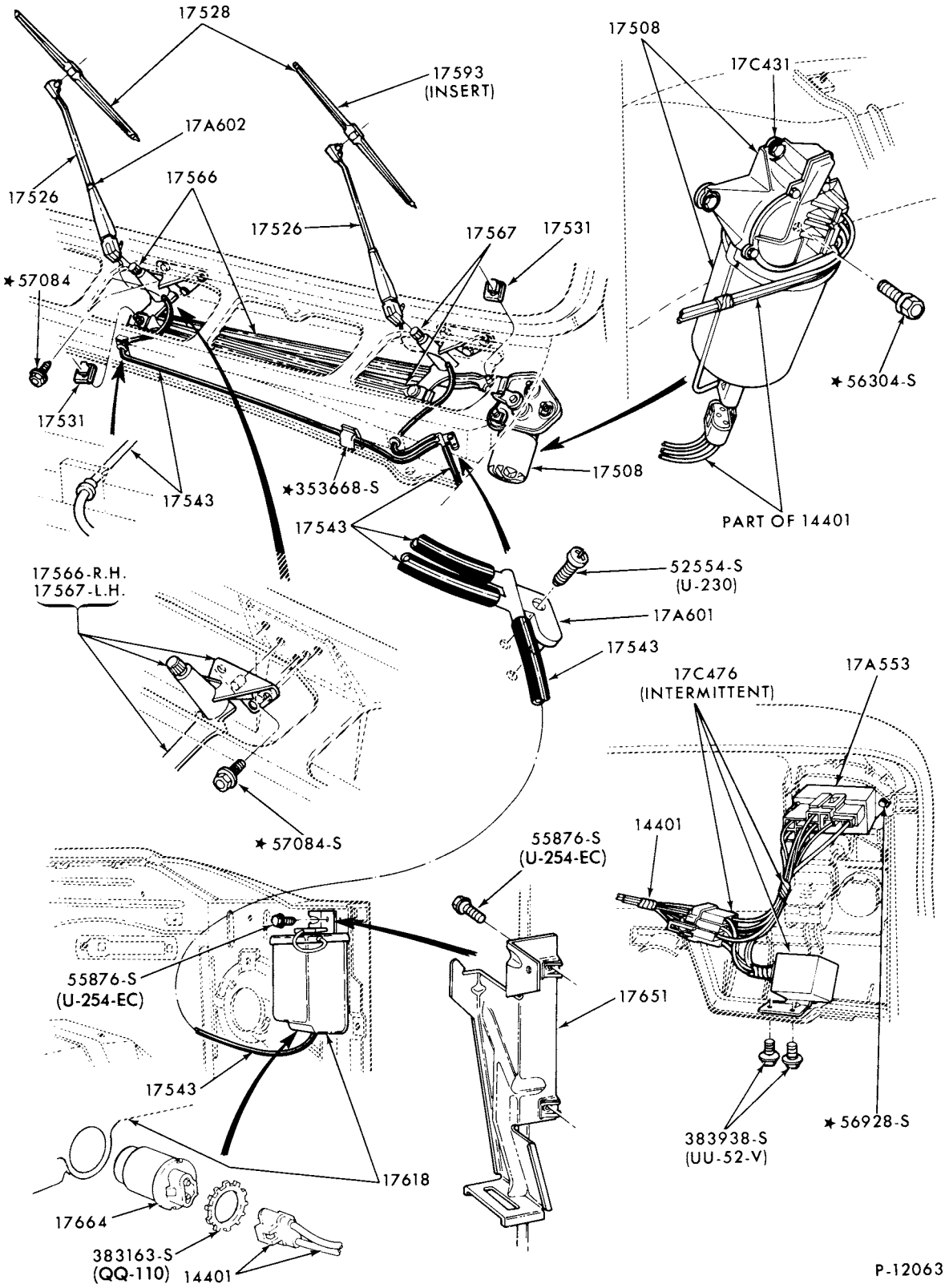

WINDSHIELD WIPER and WASHER PARTS
1975/ E100/350

COPYRIGHT © 1979 -FORD MOTOR-DEARBORN, MICHIGAN COMPANY

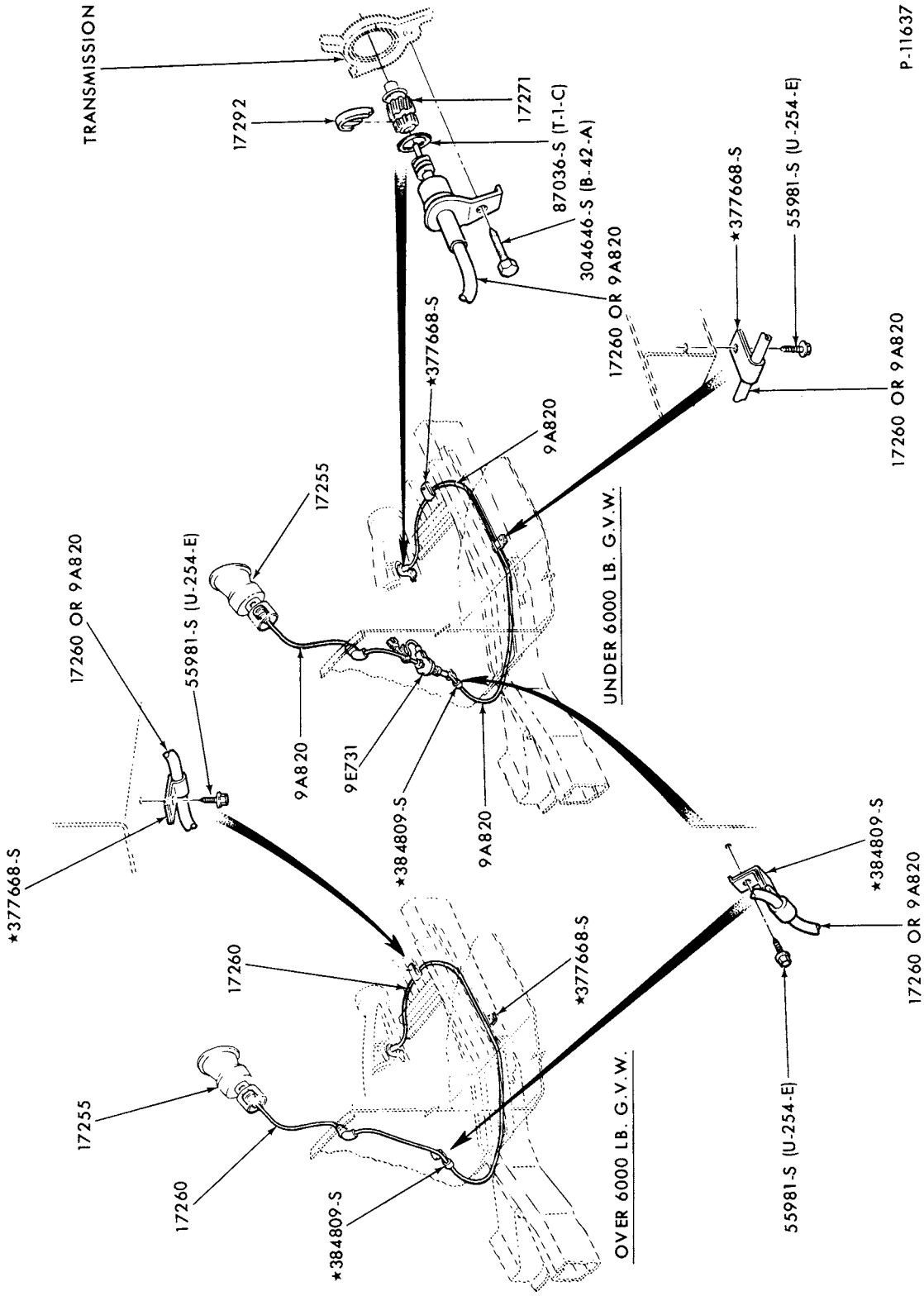

SPEEDOMETER CABLES
1975/ E100/350

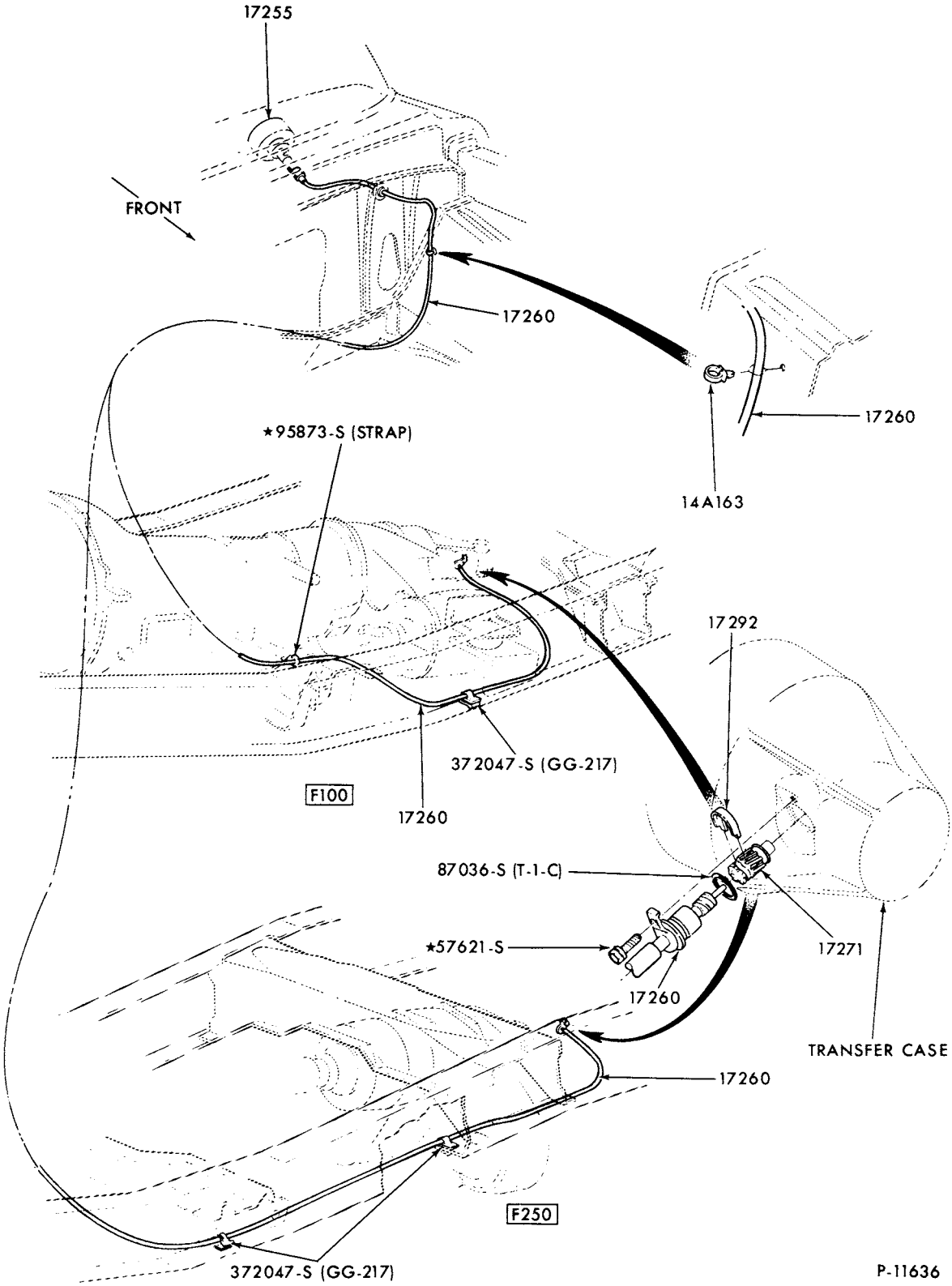

SPEEDOMETER CABLES
1974/79 F100/250--4/W/D and A/T

COPYRIGHT © 1979 FORD MOTOR COMPANY, DEARBORN, MICHIGAN

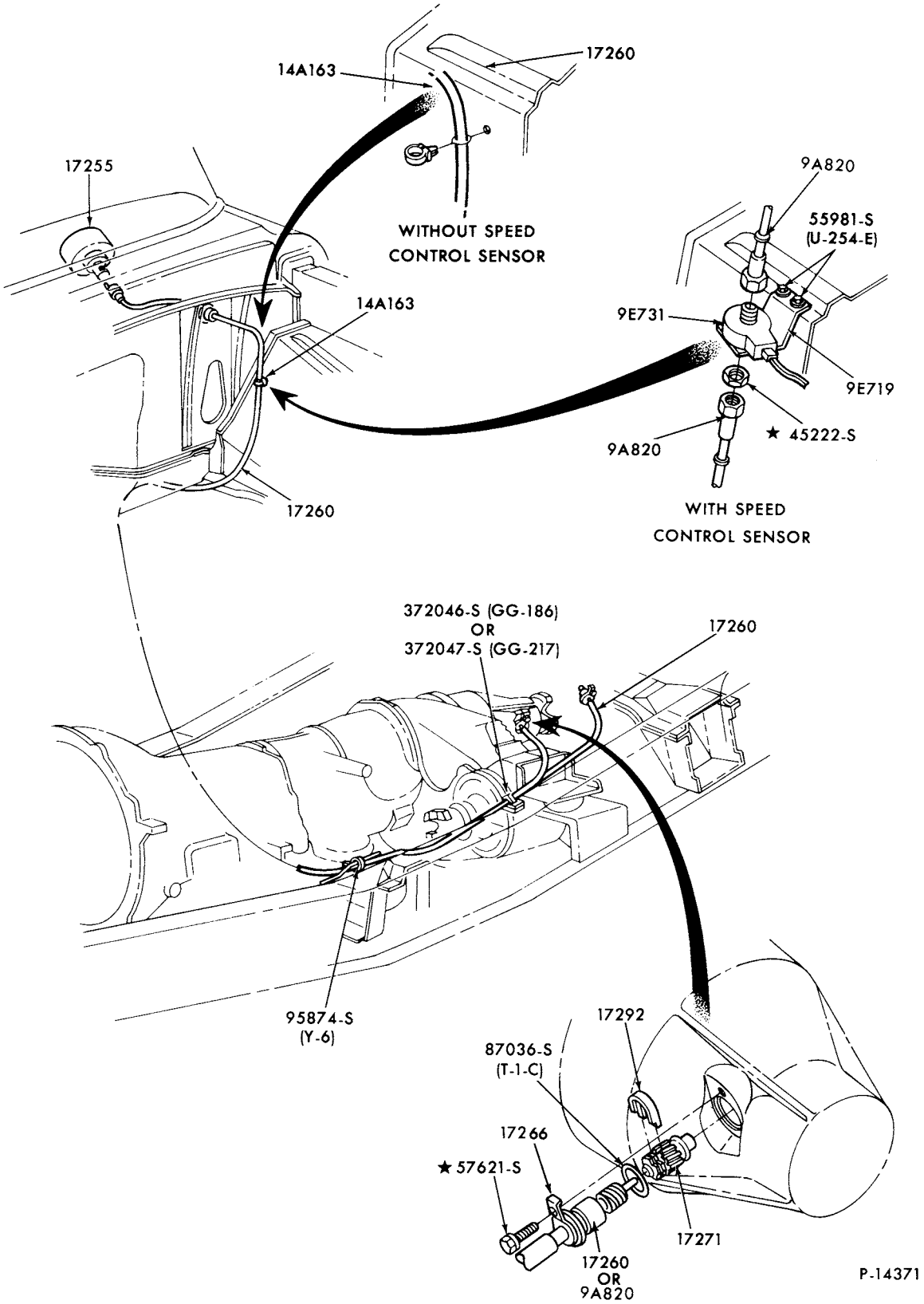

SPEEDOMETER CABLES-WITH SPEED SENSOR
1977/79 F100/250--4/W/D and A/T

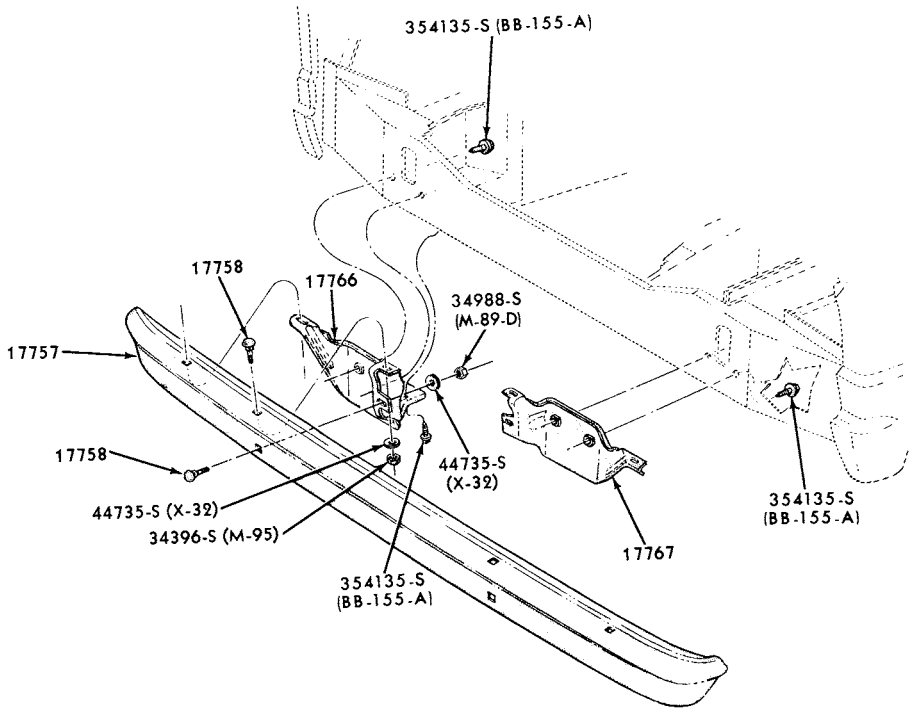

FRONT BUMPER PARTS
1973/74 E100/300

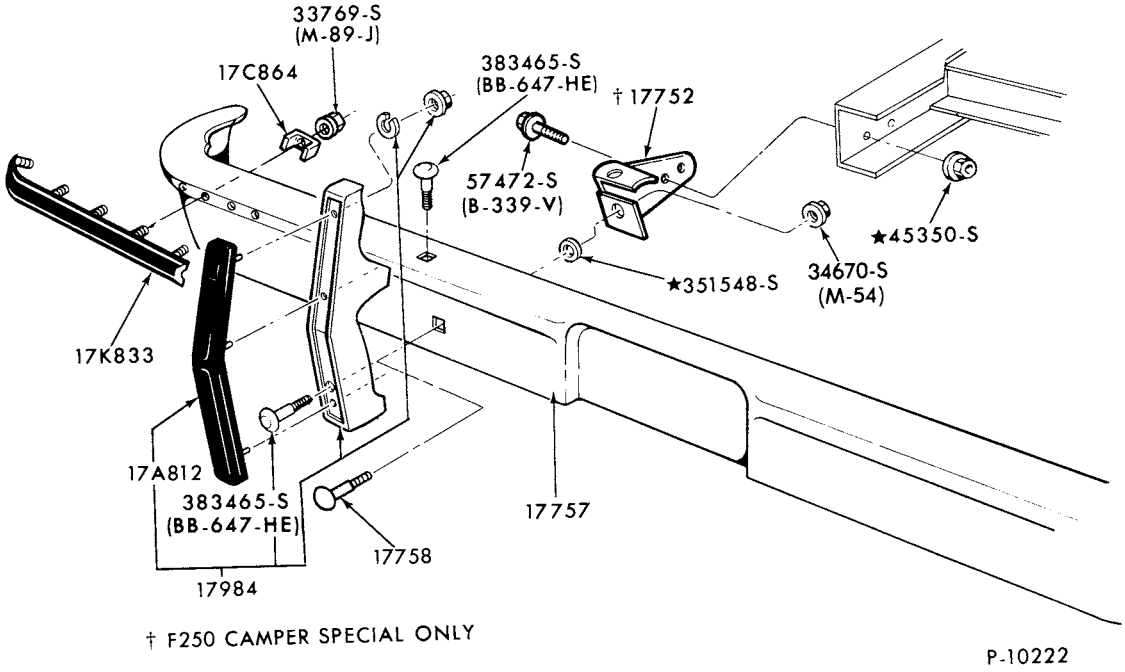

† F250 CAMPER SPECIAL ONLY

FRONT BUMPER PARTS
1973/77 F100/250--2/W/D

COPYRIGHT © 1979 FORD MOTOR COMPANY - DEARBORN, MICHIGAN

1973/79 TRUCK SERIES 100/500

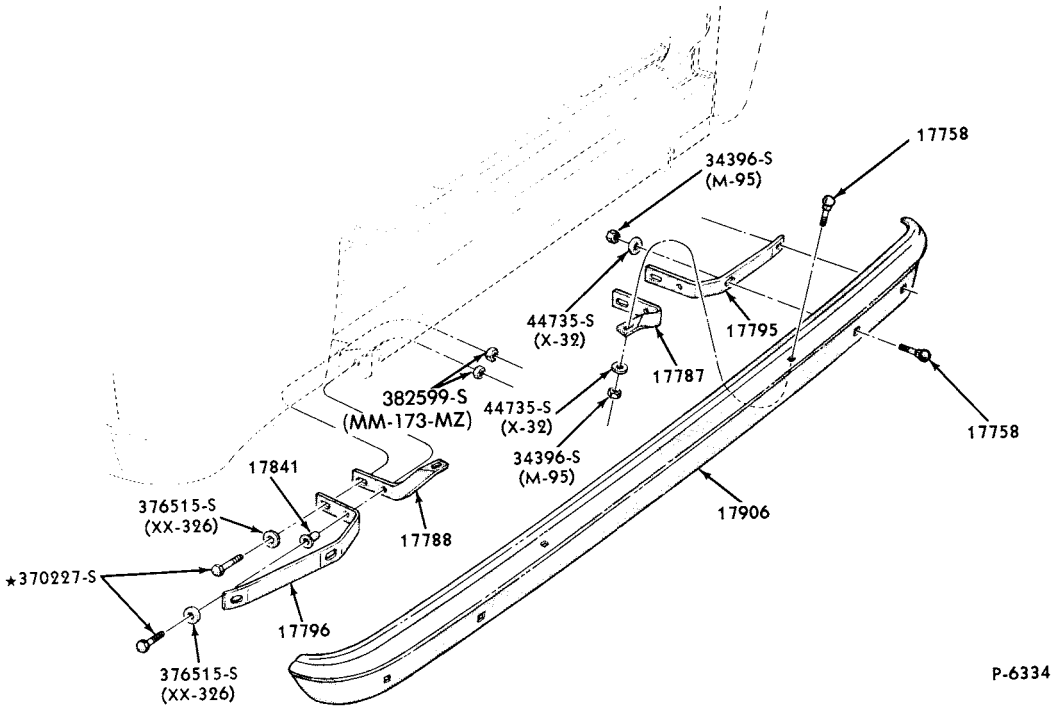

REAR BUMPER PARTS
1973/74 E100/300

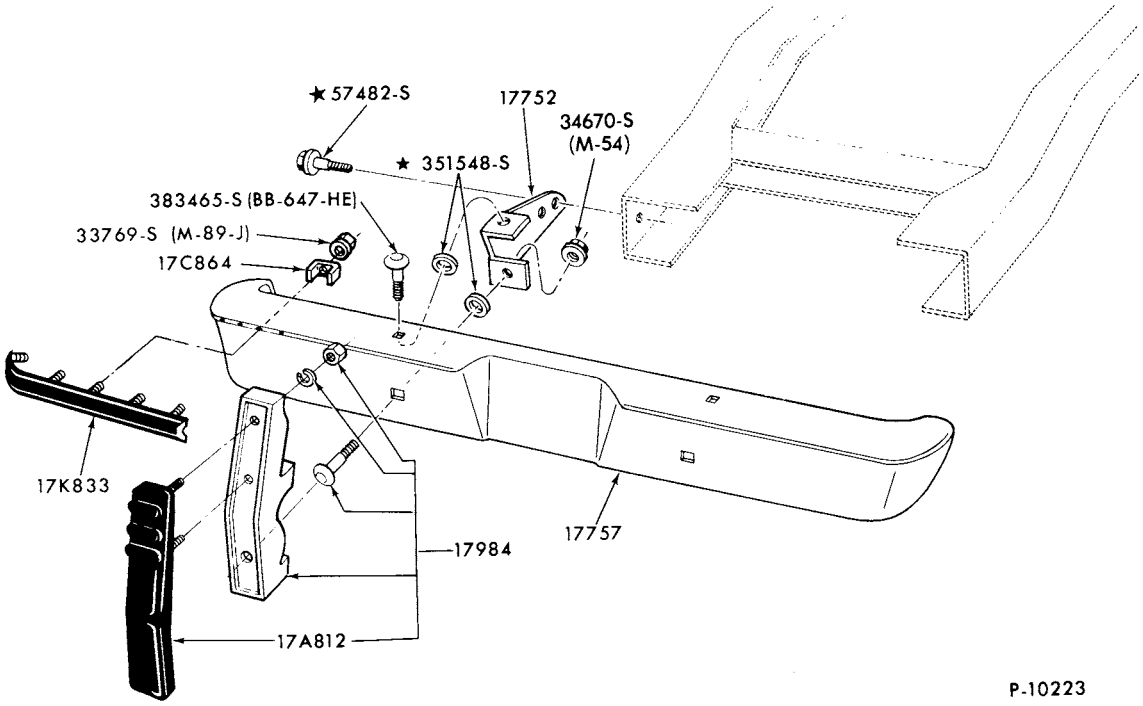

FRONT BUMPER PARTS
1973/77 F250--4/W/D and F350

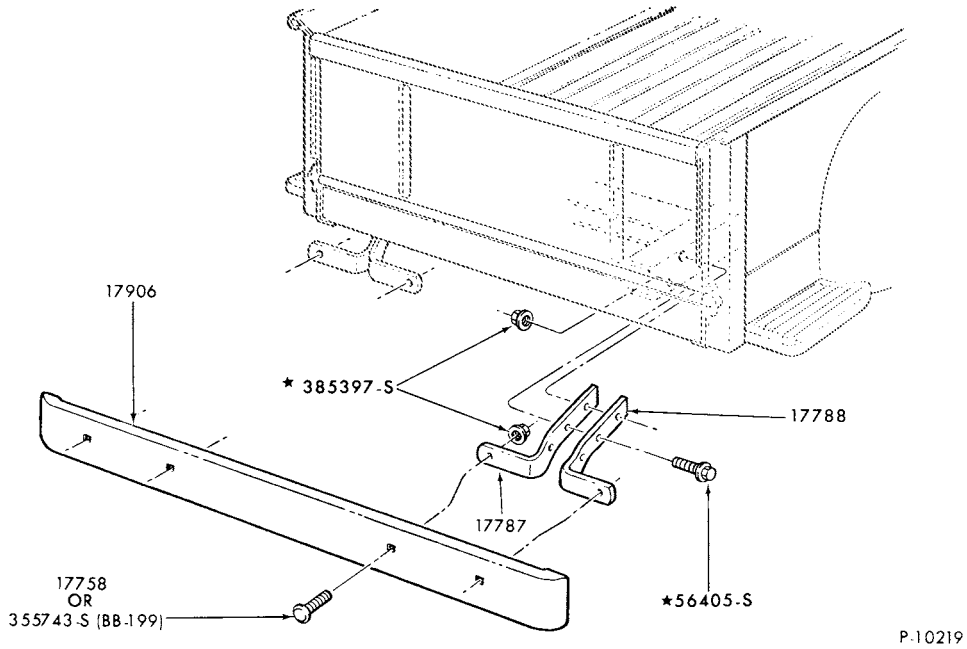

REAR BUMPER PARTS
1973/ F100/250 (83)

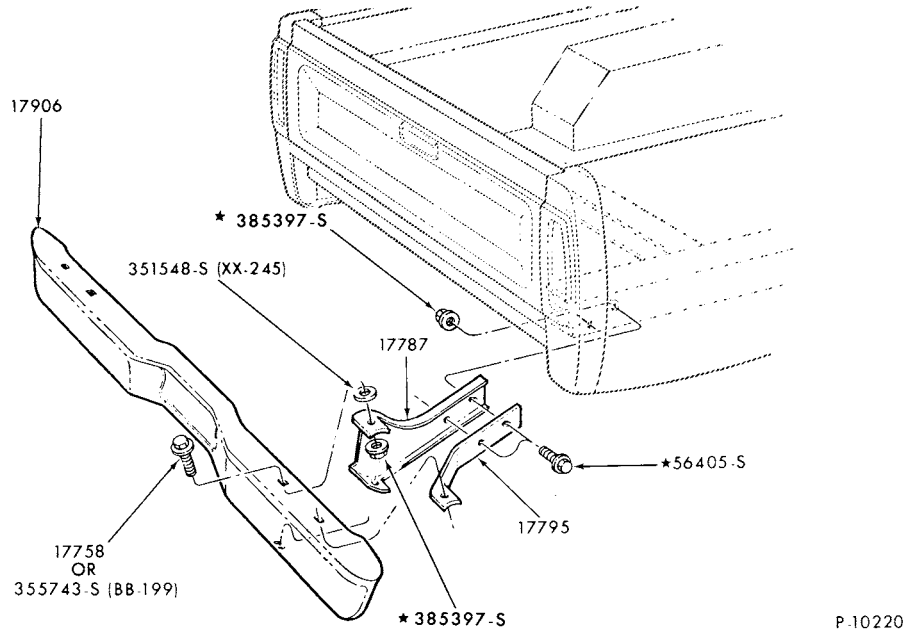

REAR BUMPER PARTS
1973/ F100/350 (99)--w/o STEP

COPYRIGHT © 1979 FORD MOTOR COMPANY - DEARBORN, MICHIGAN

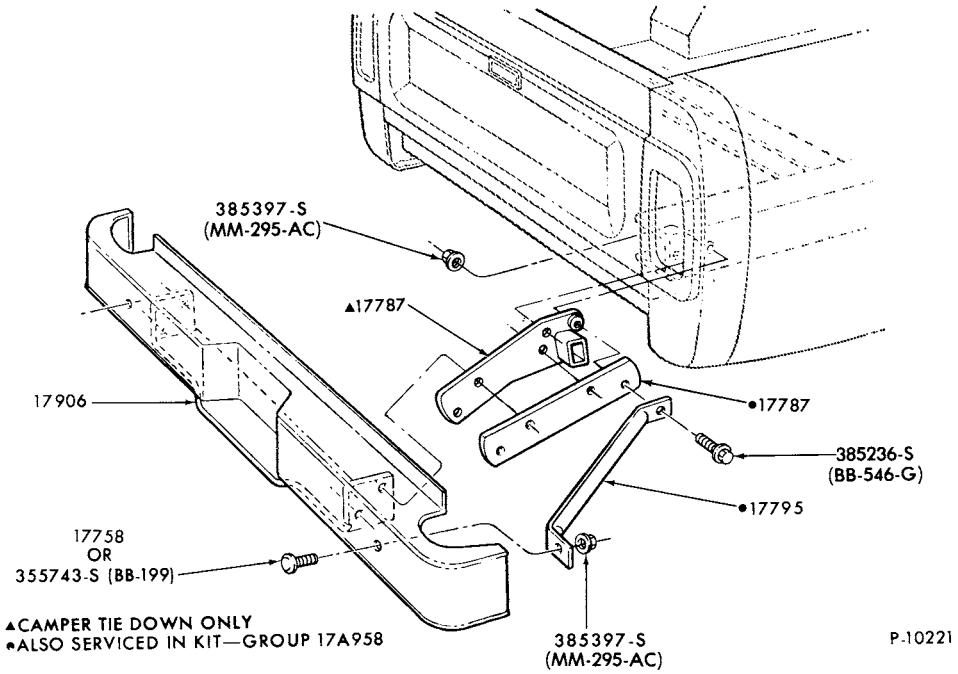

REAR STEP BUMPER PARTS
1973/ F100/350 (99)

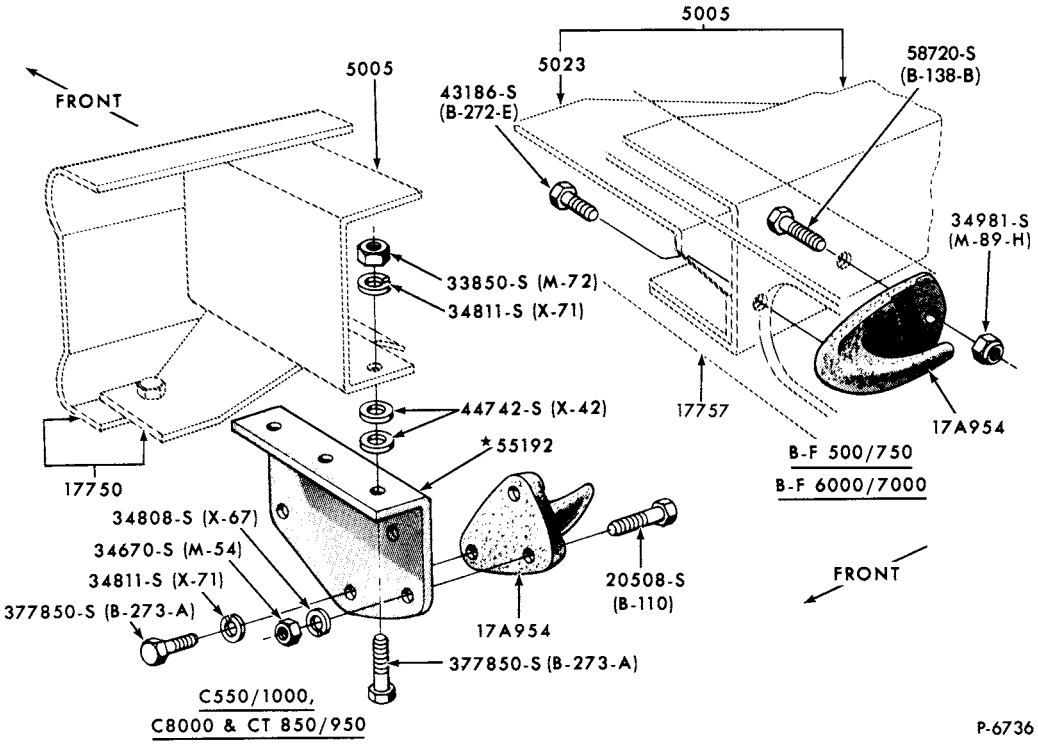

TOW HOOKS
1973/77 B-F500

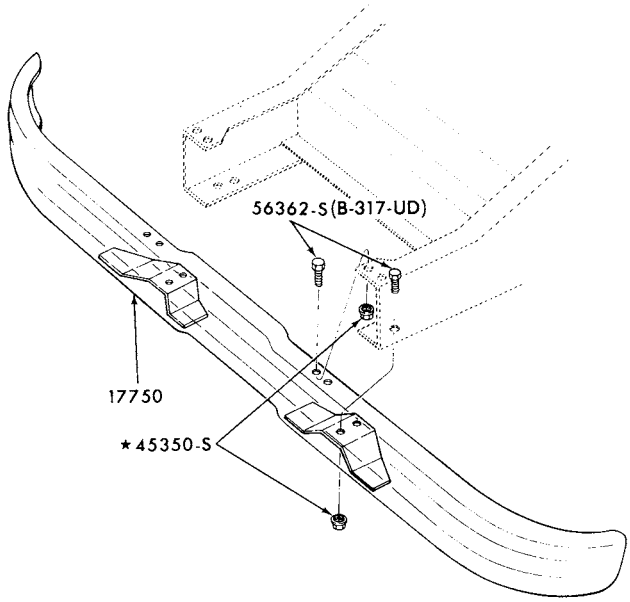

P-11469

FRONT BUMPER PARTS
1973/77 P350/500

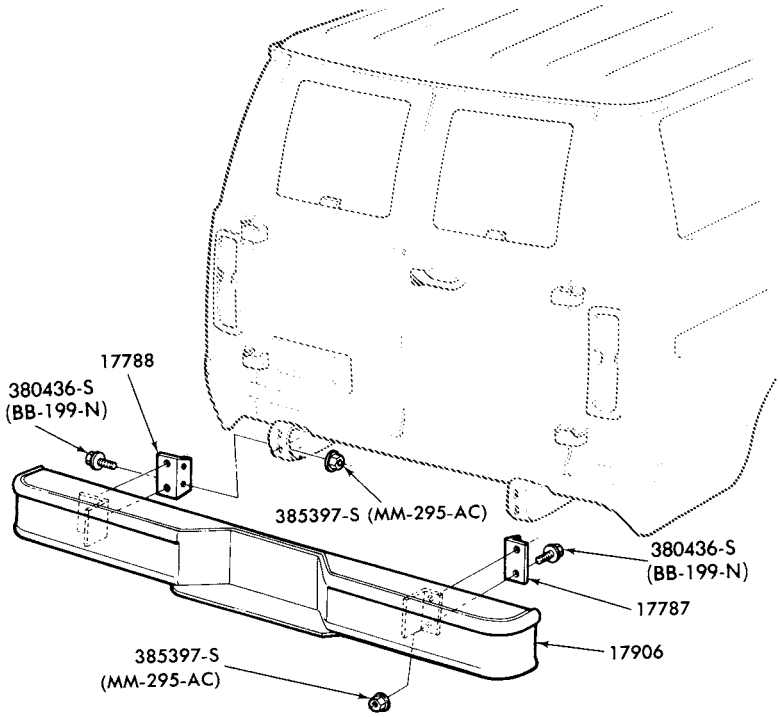

P-13339

REAR BUMPER PARTS
1975/ E100/350--w/ STEP BUMPER

COPYRIGHT © 1979 FORD MOTOR COMPANY DEARBORN, MICHIGAN

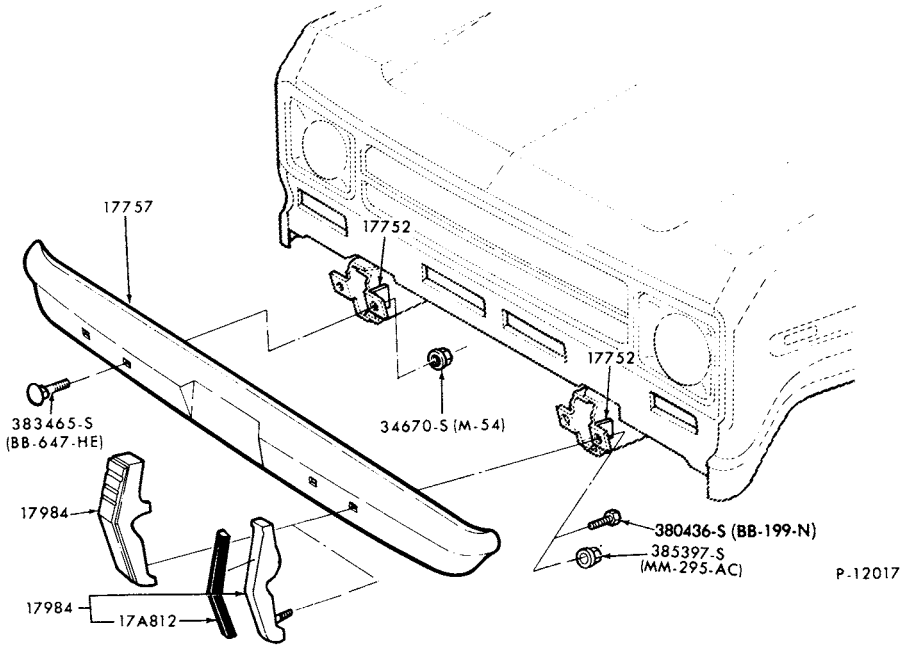

FRONT BUMPER PARTS
1975/77 E100/350

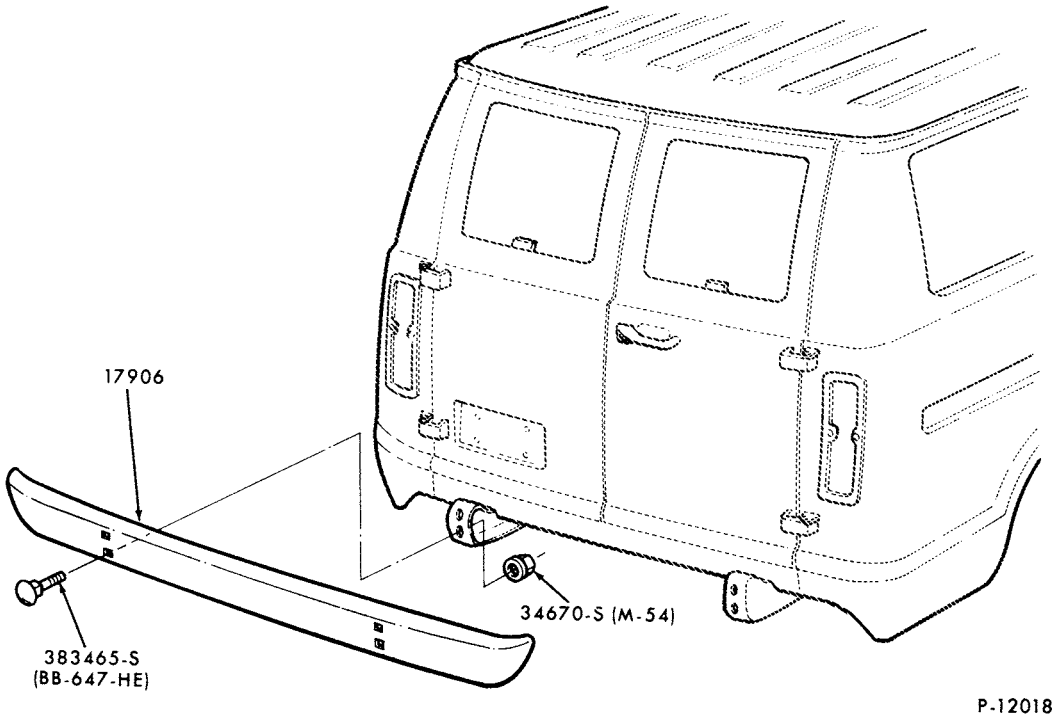

REAR BUMPER PARTS
1975/ E100/350--w/o STEP BUMPER

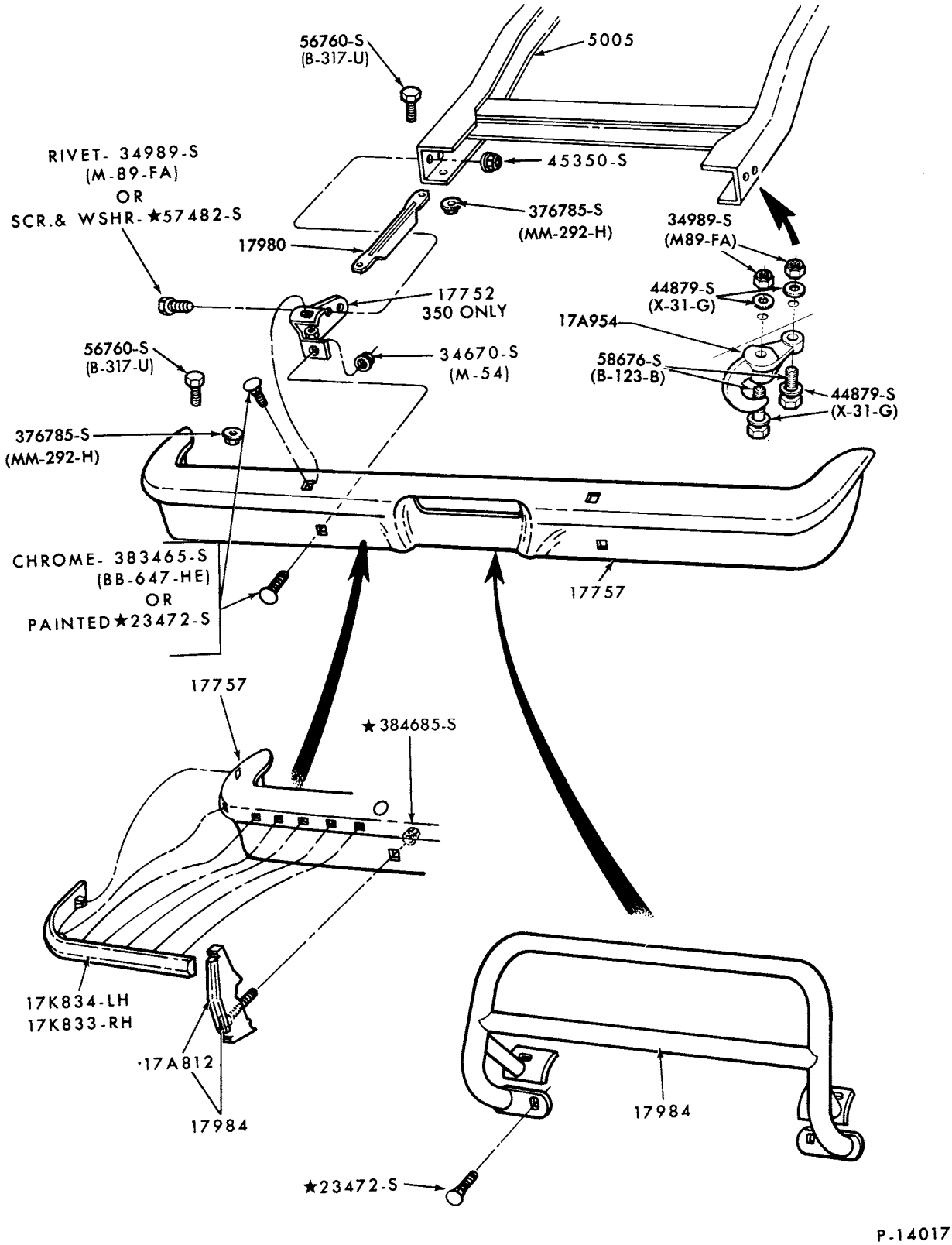

P-14017

FRONT BUMPER PARTS
1978/ F100/350

COPYRIGHT © 1979 FORD MOTOR COMPANY—DEARBORN, MICHIGAN

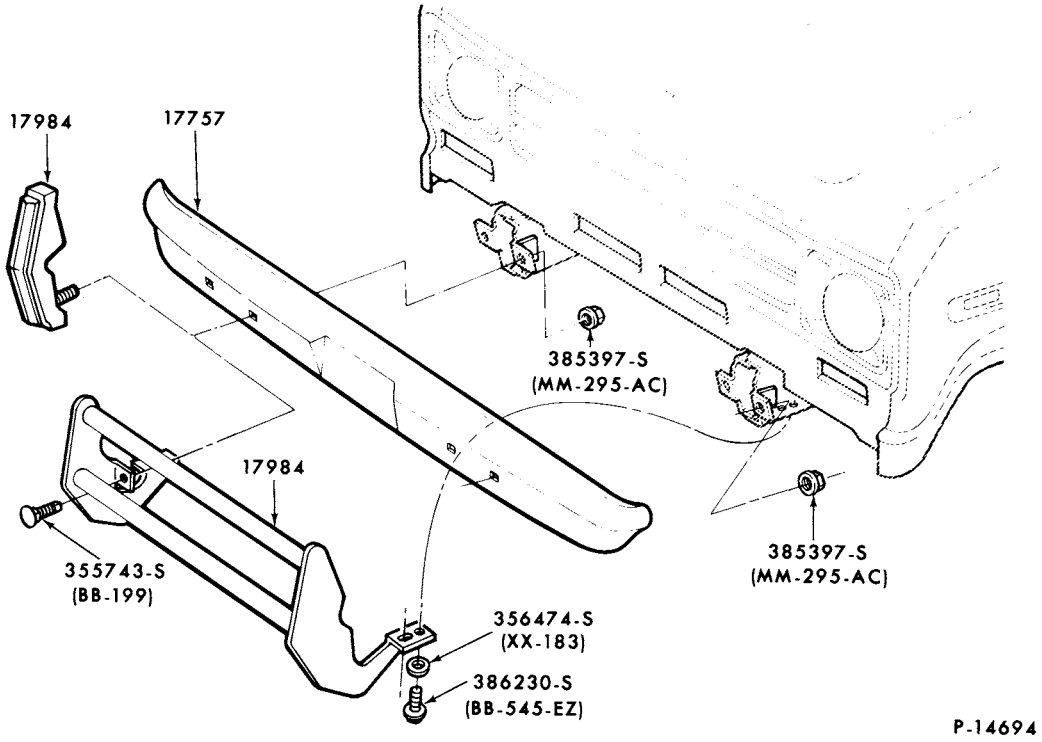

FRONT BUMPER PARTS
1978/ E100/350

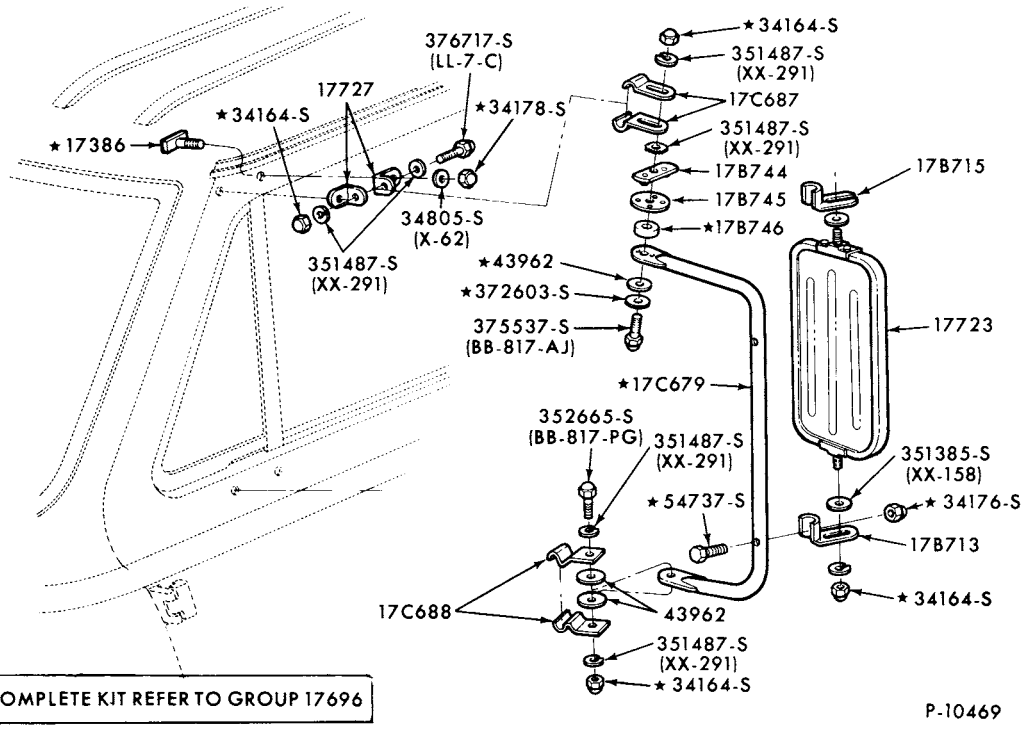

MIRROR-OUTSIDE (WESTERN JR. SWING LOCK-HIGH PROFILE-FIXED HEIGHT)-TYPE 2
1973/ E100/350

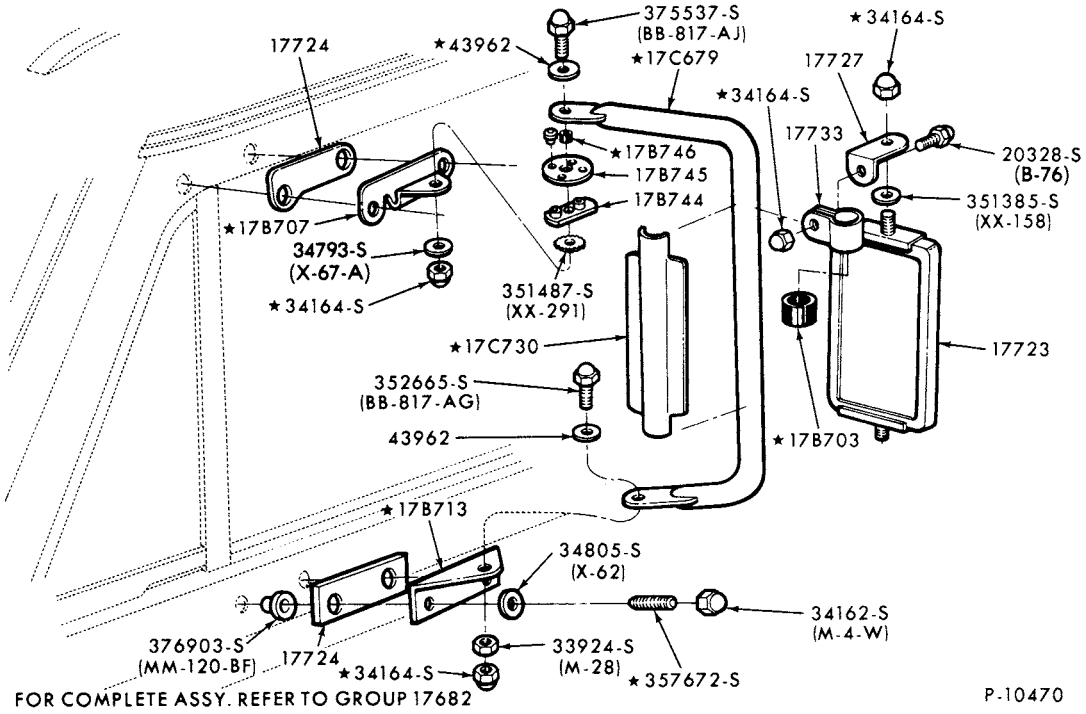

MIRROR-OUTSIDE (WESTERN JR. SWING LOCK-HIGH PROFILE-ADJUSTABLE HEIGHT)-TYPE 2
1973/ E100/350

COPYRIGHT © 1979 FORD MOTOR COMPANY · DEARBORN, MICHIGAN

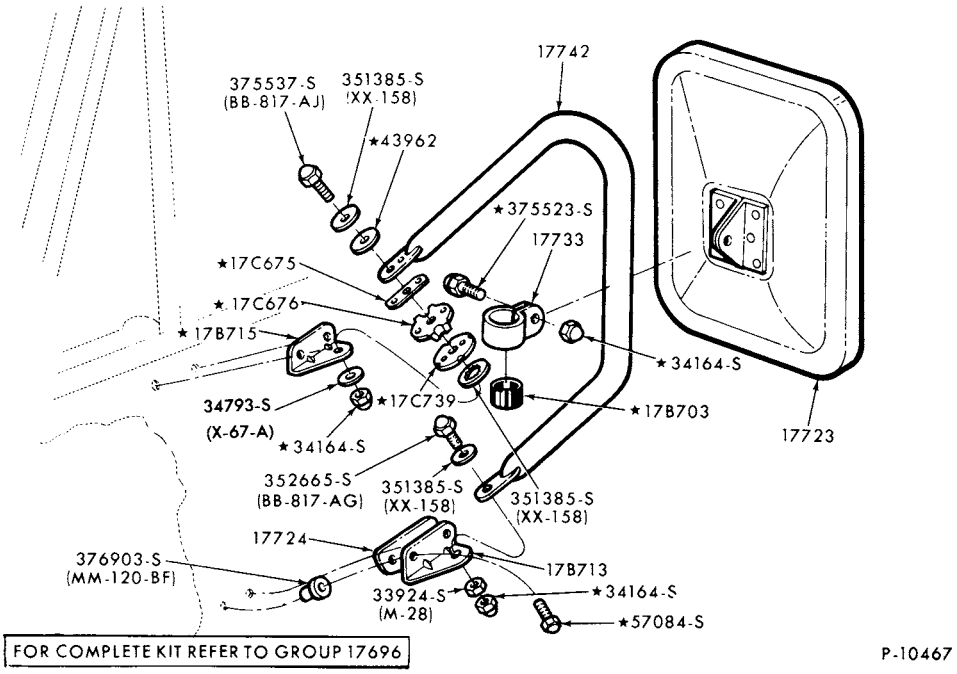

MIRROR-OUTSIDE (SWING LOCK-LOW PROFILE)-TYPE 7
1973/ F100/350

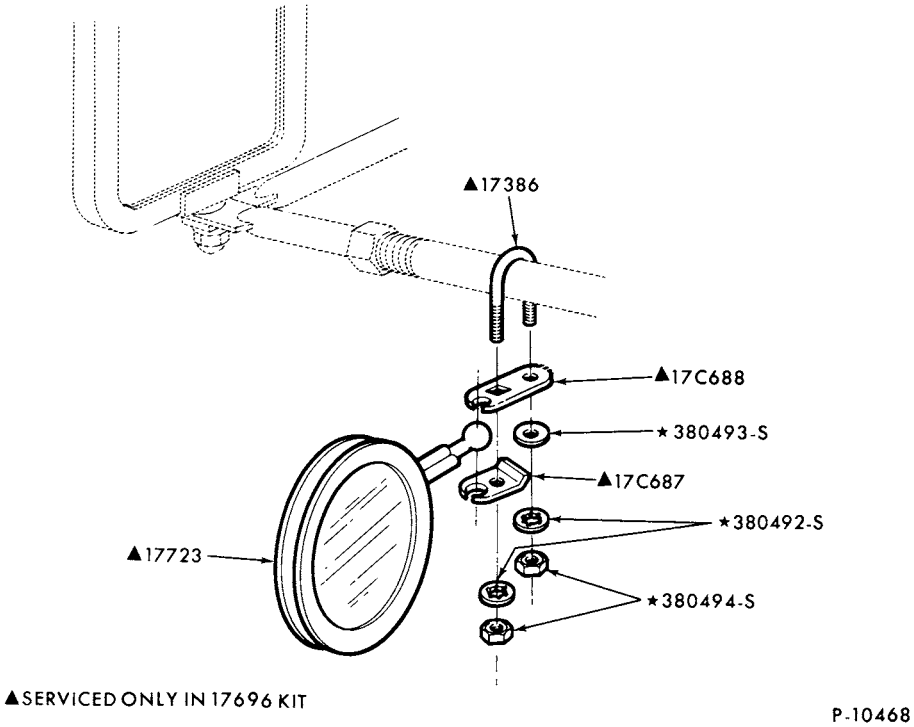

MIRROR-OUTSIDE (PANORAMIC)-TYPE 1
1973/ ALL

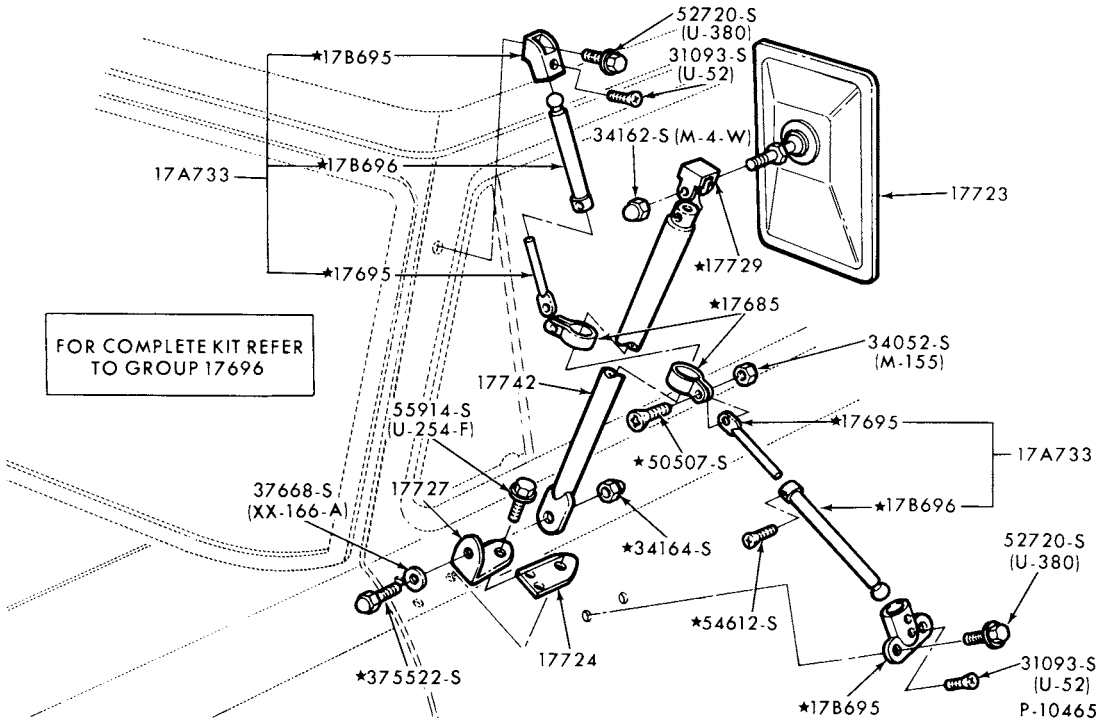

MIRROR-OUTSIDE (NON-TELESCOPING)-TYPE 13
1973/ F100/350 and 1973/77 F500

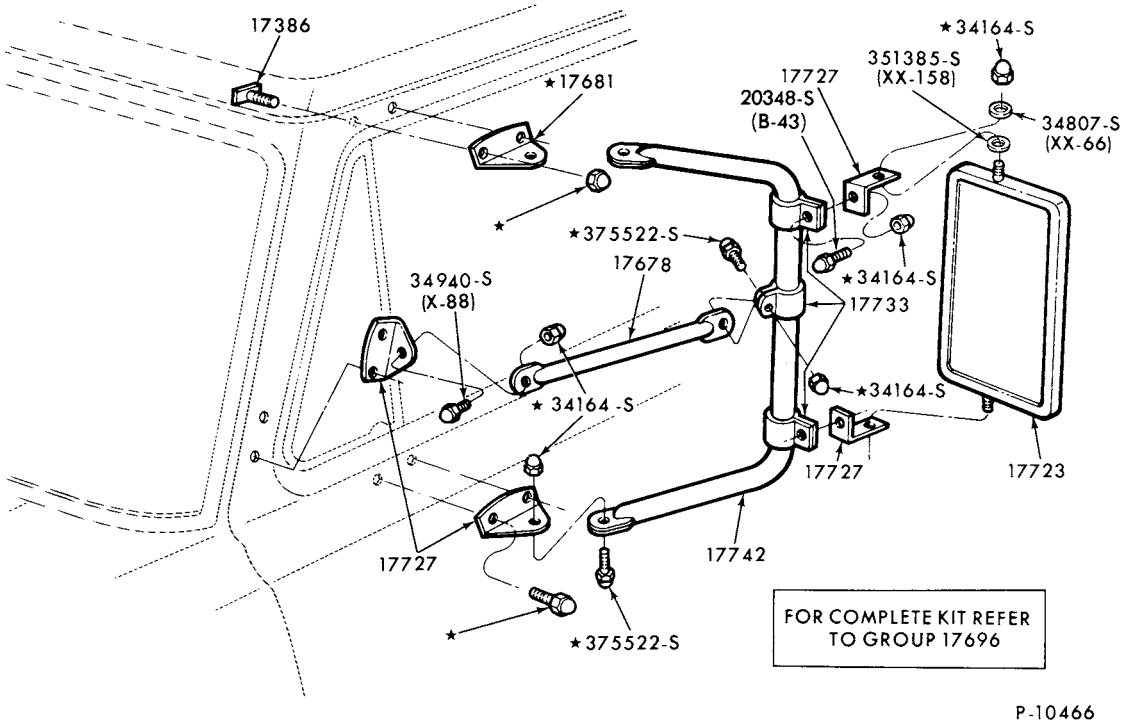

MIRROR-OUTSIDE (WESTERN JR. SWING NON-LOCK-HIGH PROFILE)-TYPE 3
1973/ F100/350

COPYRIGHT © 1979 FORD MOTOR COMPANY - DEARBORN, MICHIGAN

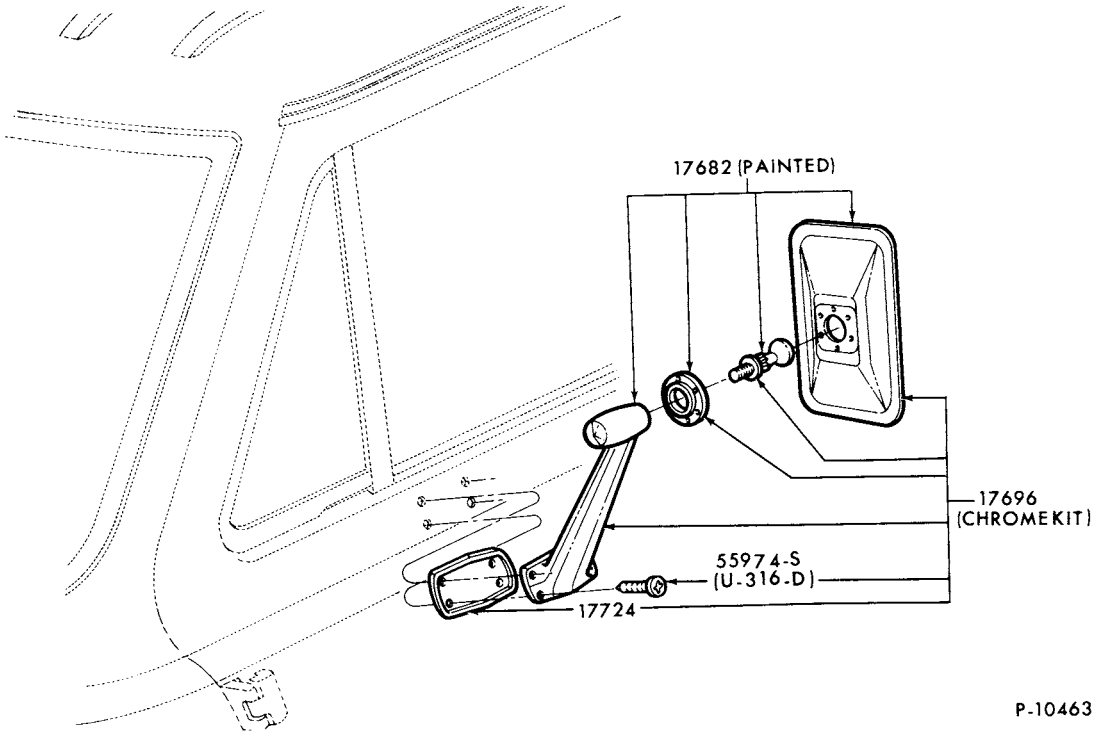

MIRROR-OUTSIDE (PASSENGER-EXTENDED ARM)-TYPE 4
1973/ E100/350

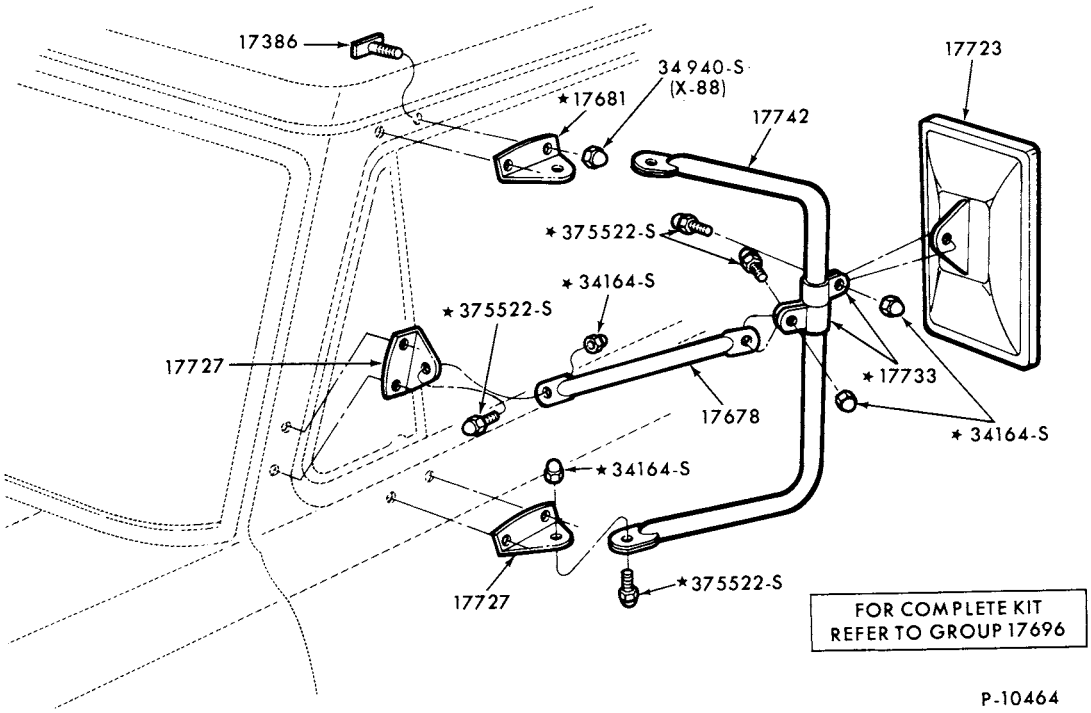

MIRROR-OUTSIDE (WESTERN JR. NON-SWING-HIGH PROFILE)-TYPE 11
1973/ F100/350

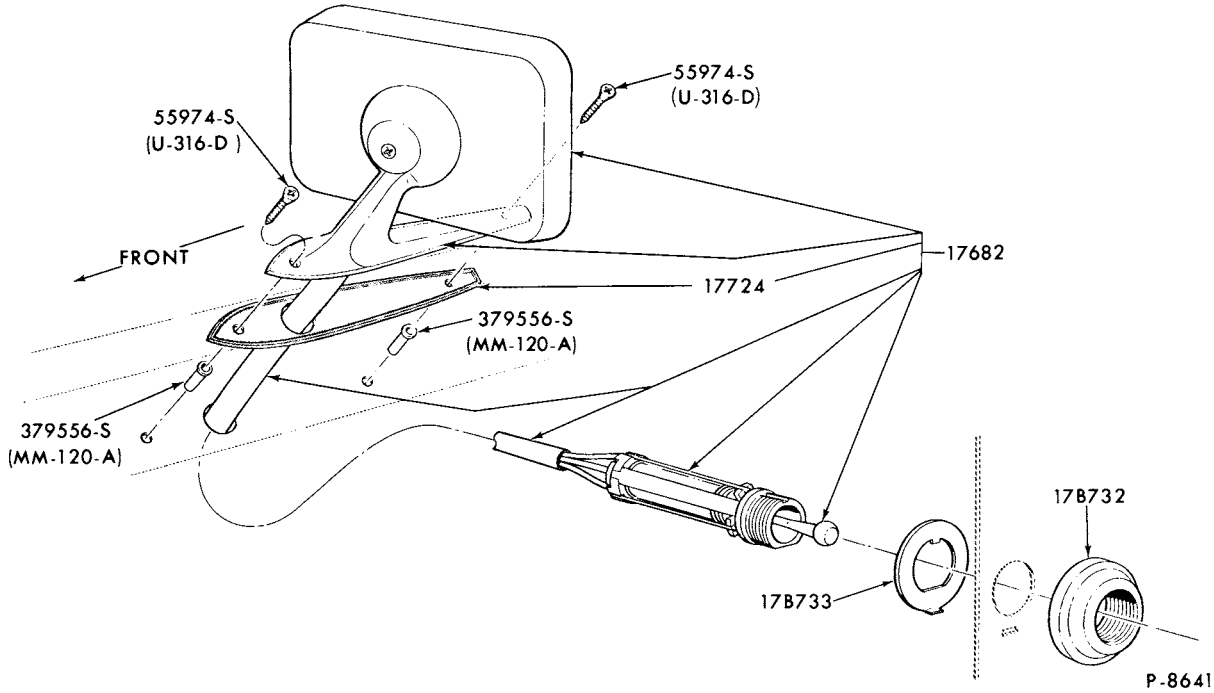

MIRROR-OUTSIDE (REMOTE CONTROL)-TYPE 5
1973/ F100/350

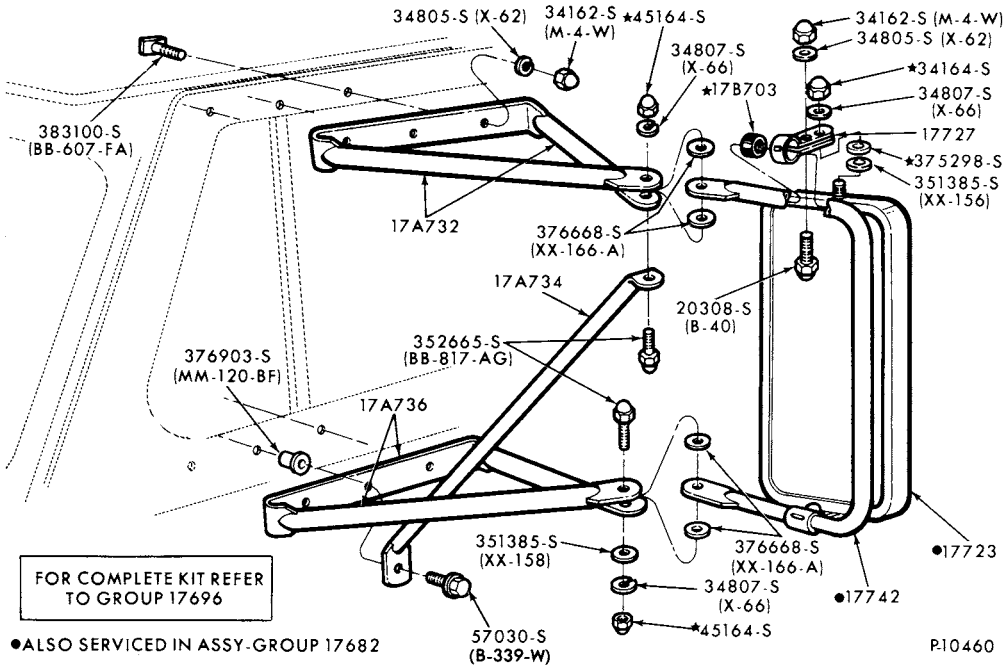

MIRROR-OUTSIDE (WESTERN SWING-NON-LOCK-HIGH PROFILE)-TYPE 12
1973/ F100/350 and 1973/77 F500

COPYRIGHT © 1979 FORD MOTOR COMPANY - DEARBORN, MICHIGAN

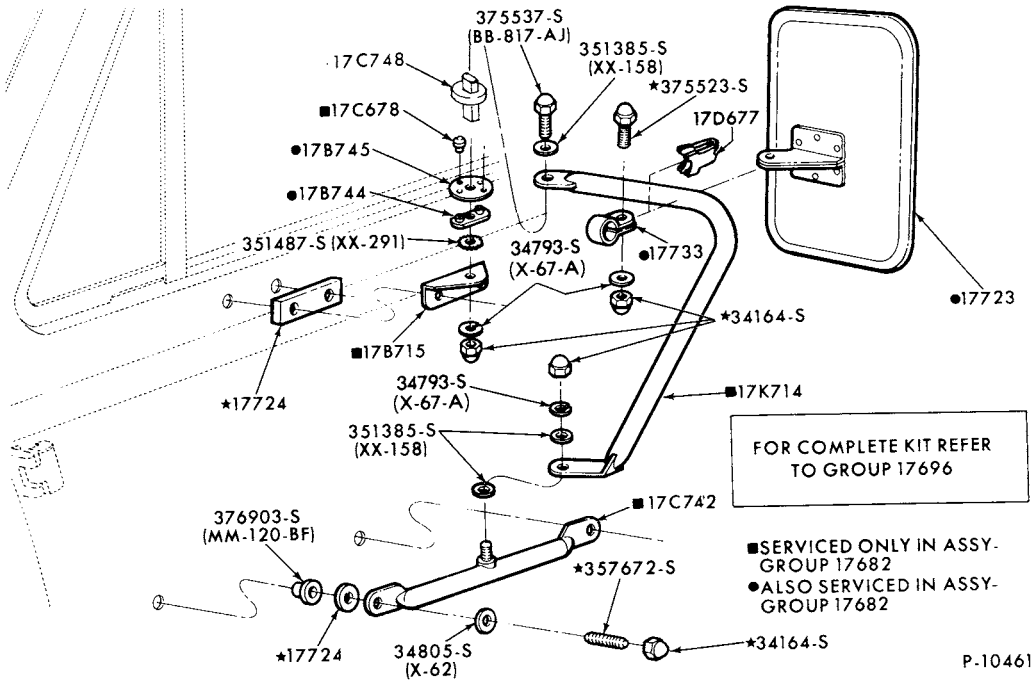

MIRROR-OUTSIDE (SWING LOCK-LOW PROFILE)-TYPE 6
1973/ E100/350

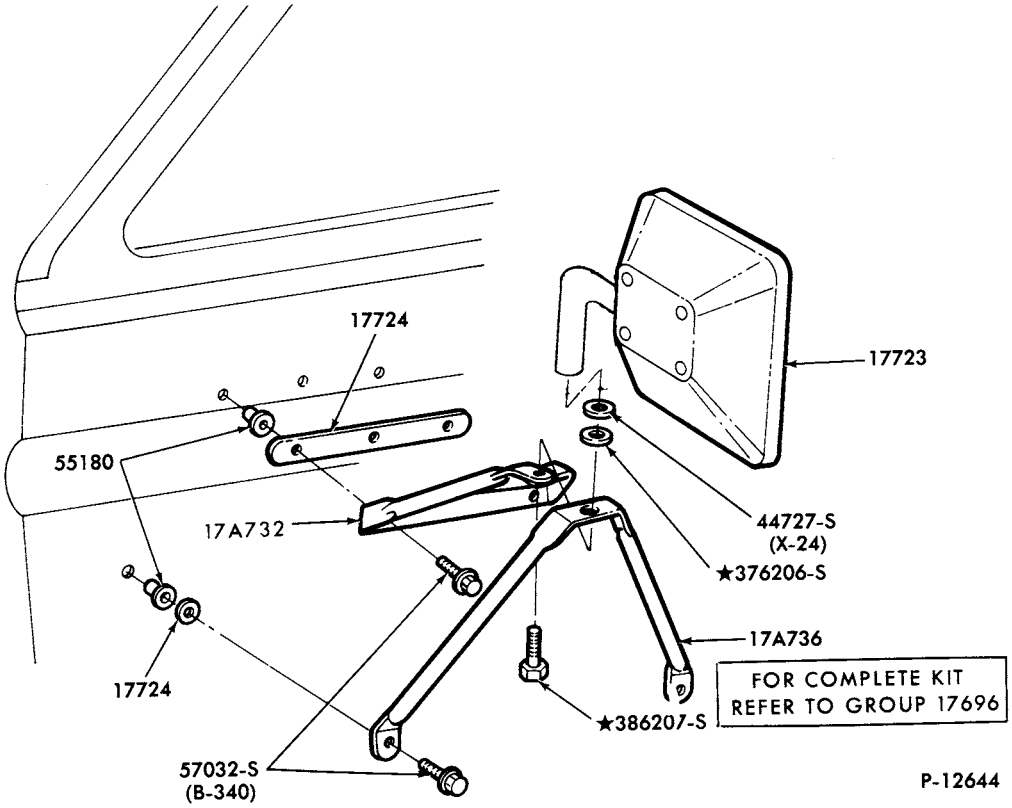

MIRROR-OUTSIDE (RECREATION SWING OUT-LOW PROFILE-GOOSE NECK)-TYPE 8
1975/ F100/350 and E100/350

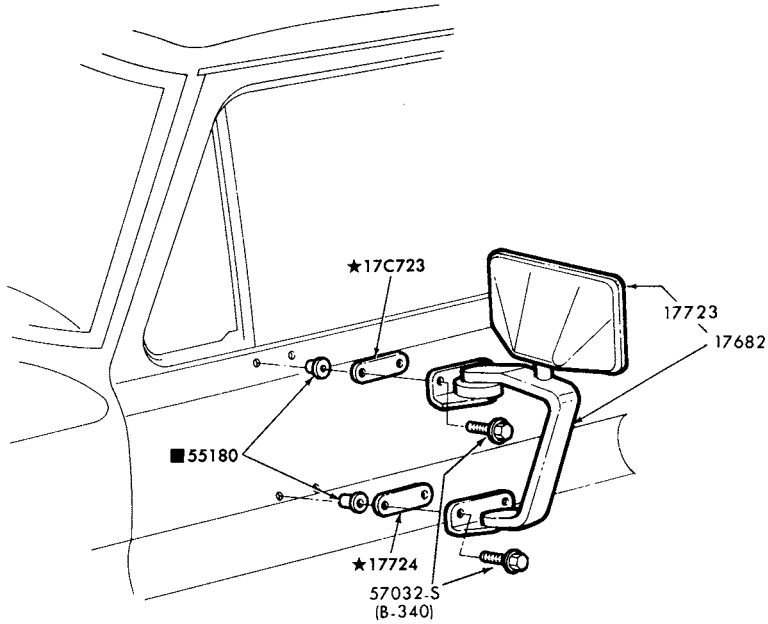

■REFER TO GROUP IN BODY SECTION

P-12700

MIRROR-OUTSIDE (SWING LOCK-TOP MOUNTED-LOW PROFILE)-TYPE 9
1975/ F100/350 and E100/350

COPYRIGHT © 1979 -FORD MOTOR-DEARBORN, MICHIGAN
COMPANY

INDEX

INCLUDED IN THE INDEX ARE THE FOLLOWING MAJOR GROUPS

AIR CONDITIONING
HEATERS
RADIOS
SHOCK ABSORBERS

YEAR 19___	TITLE	MODEL	SECTION	PAGE	ILLUS. NO.
	B SERIES				
	SHOCK ABSORBERS				
73/77	Shock absorber parts (front)	All	53	1	P-5857
73/77	Shock absorber parts (rear)	All	53	5	P-10589
	E SERIES				
	AIR CONDITIONING				
73/74	Air conditioner parts-engine compartment-built-in A/C-(dealer installed)-6 cyl.	All	197	2	P-8857
73/74	Bezel and controls-built-in A/C (dealer installed)	All	195	9	P-10356
73/74	Compressor brackets and pulleys	All	197	11	P-6975
73/	Compressor-Tecumseh design	All	197	12	P-4381
73/	Compressor-York design	All	197	13	P-4382
73/74	Condenser and dehydrator-built-in A/C (dealer installed)	All	197	7	P-8882
73/74	Controls and wiring (integral A/C)	All	195	2	P-6972
73/74	Ducts and registers (integral A/C)	All	195	3	P-6973
73/74	Evaporator (main)-condenser and dehydrator (integral A/C)	All	195	4	P-6974
73/74	Evaporator parts (auxiliary)-(integral A/C)	All	195	5	P-8736
73/74	Evaporator parts-built-in A/C (dealer installed)	All	195	6	P-8847
73/74	Under floor tubes and hoses (integral A/C)	All	197	10	P-6976
75/	Evaporator (main)	All	195	12	P-12474
75/	Evaporator (auxiliary)	All	195	13	P-12484
75/	Evaporator-built-in A/C (dealer installed)-main	All	195	15	P-12645
79	Evaporator-built-in A/C (dealer installed)-auxiliary	All	195	20	P-15513
75/	Condenser and dehydrator	All	197	14	P-12476
75/	Ducts and controls (main)	All	195	14	P-12475
75/	Ducts and controls (auxiliary)	All	195	13	P-12484
79	Ducts and controls-built-in A/C (dealer installed)-auxiliary	All	195	21	P-15512
75/	Ducts and controls-built-in A/C (dealer installed)-main	All	195	16	P-12646
79	Compressor brackets--8 cyl. 302,351 (dealer installed)	All	197	21	P-15507
79	Compressor brackets--6 cyl. 300 (dealer installed)	All	197	22	P-15504
79	Compressor brackets--8 cyl. 460 (dealer installed)	All	197	23	P-15506
75/	Compressor brackets--8 cyl. 351	All	197	15	P-12477
75/	Compressor brackets--8 cyl. 460	E250/350	197	16	P-12478
75/	Hoses (main)--8 cyl. 351	All	197	17	P-12479
75/	Hoses (main)--8 cyl. 460	E250/350	197	17	P-12480
75/	Hoses (main & auxiliary)	All	197	18	P-12483
78/	Ducts and register - (Super/Van wagon)	E150/350	195	19	P-15092
79	Condenser and dehydrator-built-in A/C (auxiliary)	All	197	7	P-15514
79	Condenser and dehydrator built-in A/C (main)	All	197	14	P-15515
	HEATERS				
73/74	Heater parts (auxiliary)	All	184	4	P-10357
73/74	Heater parts (fresh air)	All	184	3	P-6491
75/	Hoses (auxiliary)--6 cyl.	All	184	8	P-12481
75/	Heater parts (fresh air)-engine compartment	All	184	5	P-11719
75/	Heater parts (fresh air)-passenger compartment	All	184	6	P-11718
75/	Heater parts (auxiliary)	All	184	7	P-12484
75/	Hoses (auxiliary)--6 cyl.	All	184	8	P-12481
75/	Hoses (auxiliary)--8 cyl. w/auxiliary A/C	All	184	8	P-12483
75/	Hoses (auxiliary)--8 cyl. w/o auxiliary A/C	All	184	9	P-12482
78/	Heater ducts and register - (Super/Van wagon)	E150/350	184	14	P-15092
	RADIOS				
75/	Radio receiver, speaker and antenna parts	All	188	5	P-11520
75/	Radio speakers-front door and rear side	All	188	4	P-12183
78/	Citizen band (C.B. radio) and related parts				
	- Page A	E100/350	188	9	P-14425
	- Page B	E100/350	188	10	P-14426
	- Page C	E100/350	188	11	P-14427

COPYRIGHT © 1980 — FORD MOTOR COMPANY —DEARBORN, MICHIGAN

INDEX

YEAR	TITLE	MODEL	SECTION	PAGE	ILLUS.
	E SERIES - cont'd.				
	RADIOS - cont'd.				
79	Radio-premium sound - Page A	E100/350	188	12	P-16243
	- Page B	E100/350	188	13	P-16244
	SHOCK ABSORBERS				
73/74	Shock absorber parts (front)	All	30	2	P-10160-A
			30	3	P-10160-B
73/74	Shock absorber parts (rear)	All	53	6	P-6363
	F SERIES				
	AIR CONDITIONING				
73/	Compressor-Tecumseh design	All	197	12	P-4381
73/	Compressor-York design	All	197	13	P-4382
76/	Compressor installation - integral--8 cyl. 302	F100/350	197	19	P-12940
76/	Compressor installation - integral--8 cyl. 360 and 390	F100/350	197	20	P-12939
76/	Compressor installation - integral--8 cyl. 460	F150/350	197	20	P-12938
79	Compressor brackets--6 cyl. 300 (dealer installed)	All	197	22	P-15504
79	Compressor brackets--8 cyl. 400 (dealer installed)	All	197	24	P-15505
79	Compressor brackets--8 cyl. 302,351 (dealer installed)	All	197	25	P-15501
73/78	Condenser and dehydrator-built-in (dealer installed)	F100/250	197	7	P-8882
76/	Condenser and dehydrator - integral	F100/350	197	18	P-12941
76/	Bezel and controls - integral	F100/350	195	17	P-12935
73/	Bezel and controls-built-in (dealer installed)-w/hang-on glove box	F100/250	195	7	P-10577
73/	Bezel and controls-built-in (dealer installed)-w/instrument panel glove box	F100/250	195	10	P-11568
73/74	Engine compartment - integral--6 cyl.	F100/350	197	1	P-6447
73/74	Engine compartment-built-in (dealer installed)--6 cyl.	F100/250	197	2	P-8857
73/	Engine compartment-built-in (dealer installed)--8 cyl. 302	F100/250	197	4	P-8856
73/75	Engine compartment - integral--8 cyl.360 and 390	F100/350	197	5	P-10243
73/	Engine compartment-built-in (dealer installed)--8 cyl. 360 and 390	F100/250	197	6	P-8858
73/75	Engine compartment - integral--8 cyl. 302	F100/350	197	3	P-10242
76/	Evaporator - integral	F100/350	195	18	P-12934
79	Evaporator-built-in A/C (dealer installed)	All	195	22	P-15914
73/	Evaporator parts-built-in (dealer installed)-w/hang-on glove box	F100/250	195	6	P-8847
73/75	Evaporator - integral	F100/350	195	1	P-10241
73/	Evaporator parts-built-in (dealer installed)	F100/250	195	11	P-11569
73/75	Vacuum hoses - integral	F100/350	197	8	P-10244
73/75	Vacuum hoses - reservoir - integral	F100/350	197	9	P-10245
76/	Vacuum hoses - integral--8 cyl. 302	F100/350	197	9	P-12936
76/	Vacuum hoses - integral--8 cyl.360, 390 and 460	F100/350	197	19	P-12937
73/	Glove box parts-hang-on	F100/250	195	8	P-10768
79	Condenser and dehydrator-built-in (dealer installed)	All	197	14	P-15515
	HEATED BACK WINDOW				
77	Heated back window (defroster)	F100/350(81)	184	10	P-13270
	HEATERS				
73/	Heater parts (fresh air)	F100/350	184	1	P-10237
73/77	Heater parts (fresh air)	F500	184	2	P-10232
78/	Heater - deluxe hi-lo comfortvent system				
	- Page A	F100/350	184	11	P-14570
	- Page B	F100/350	184	12	P-14571
	- Page C	F100/350	184	13	P-14572
	RADIOS				
73/	Radio receiver and antenna parts	F100/350	188	1	P-10210
73/77	Radio receiver and antenna parts	F500	188	3	P-10212
73/	Stereo door speakers	F100/350	188	2	P-10211
78/	Citizen band (C.B.)-receiver, wiring, antenna and related parts - Page A	F100/350	188	6	P-14321
	- Page B	F100/350	188	7	P-14322
	- Page C	F100/350	188	8	P-14323

INDEX

YEAR 19__	TITLE	MODEL	SECTION	PAGE	ILLUS. NO.
	F SERIES				
	SHOCK ABSORBERS				
73/	Shock absorber parts (front)	F100/350--2/W/D	30	4	P-10321-A
			30	5	P-10321-B
73/75	Shock absorber parts (front)	F100--4/W/D	53	2	P-5123
73/	Shock absorber parts (front)	F250--4/W/D	53	3	P-11306
73/77	Shock absorber parts (front)	F500	53	1	P-5857
73/	Shock absorber parts (rear)	F100/250--2/W/D	53	7	P-10365
73/76	Shock absorber parts (rear)	F100--4/W/D	53	9	P-10367
73/	Shock absorber parts (rear)	F250--4/W/D	53	10	P-10366
73/	Shock absorber parts (rear)	F350	53	11	P-10368
73/77	Shock absorber parts (rear)	F500	53	5	P-10589
	SNOW PLOWS				
73/76	Snow plow and related parts	F100/250	195	8	P-8366
	M SERIES				
	Refer to "P" Series for illustrations				
	P SERIES				
	SHOCK ABSORBERS				
73/77	Shock absorber parts (front)	P350/400	180	1	P-2306
73/77	Shock absorber parts (front)	P500	180	1	P-2309
73/77	Shock absorber parts (rear)	P350/400	180	2	P-2305
73/77	Shock absorber parts (rear)	P500	180	2	P-2311

COPYRIGHT © 1979 — FORD MOTOR COMPANY — DEARBORN, MICHIGAN

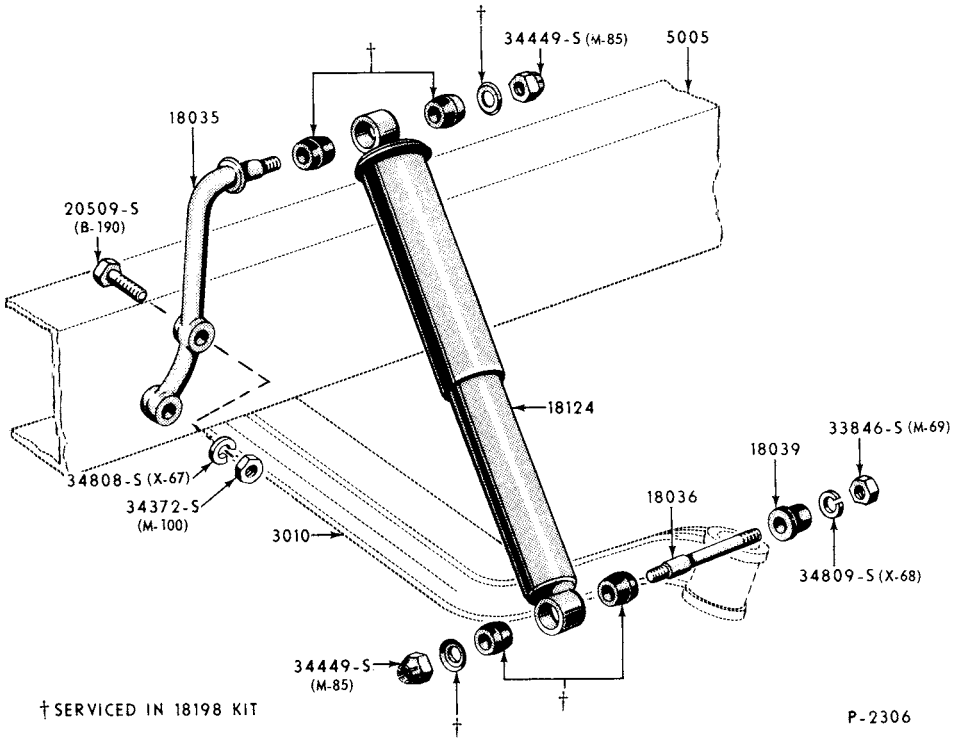

SHOCK ABSORBER PARTS (FRONT)
1973/77 P350/400

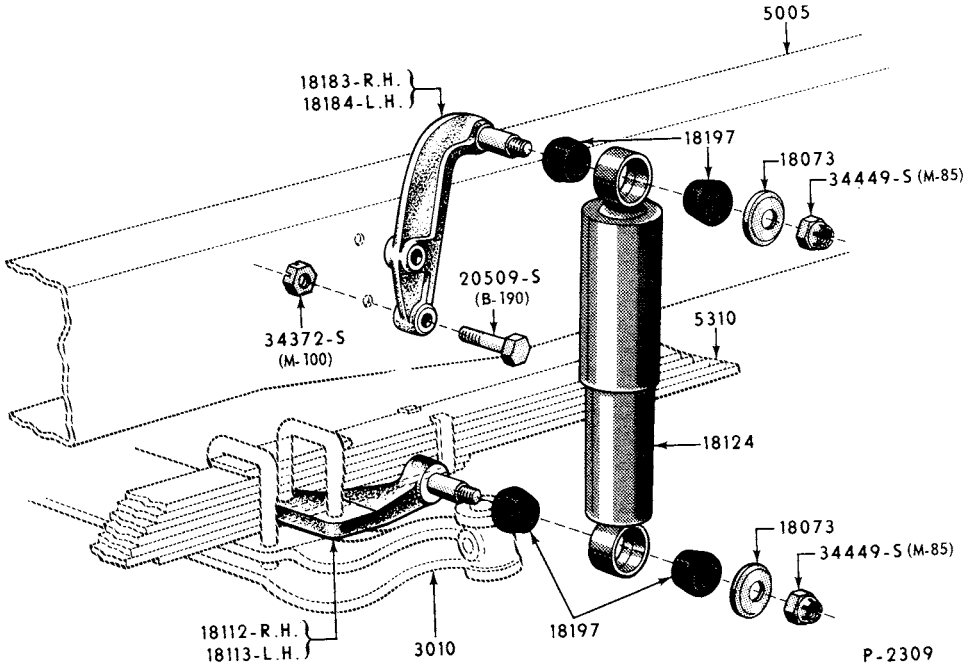

SHOCK ABSORBER PARTS (FRONT)
1973/77 P500

COPYRIGHT © 1979— FORD MOTOR-DEARBORN, MICHIGAN COMPANY

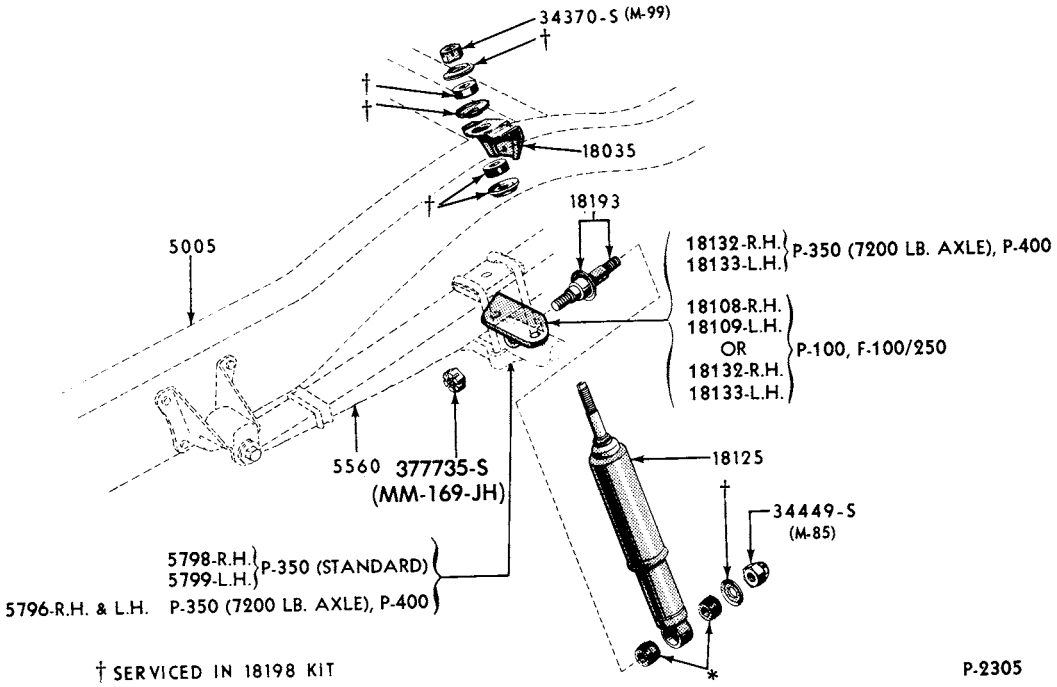

SHOCK ABSORBER PARTS (REAR)
1973/77 P350/400

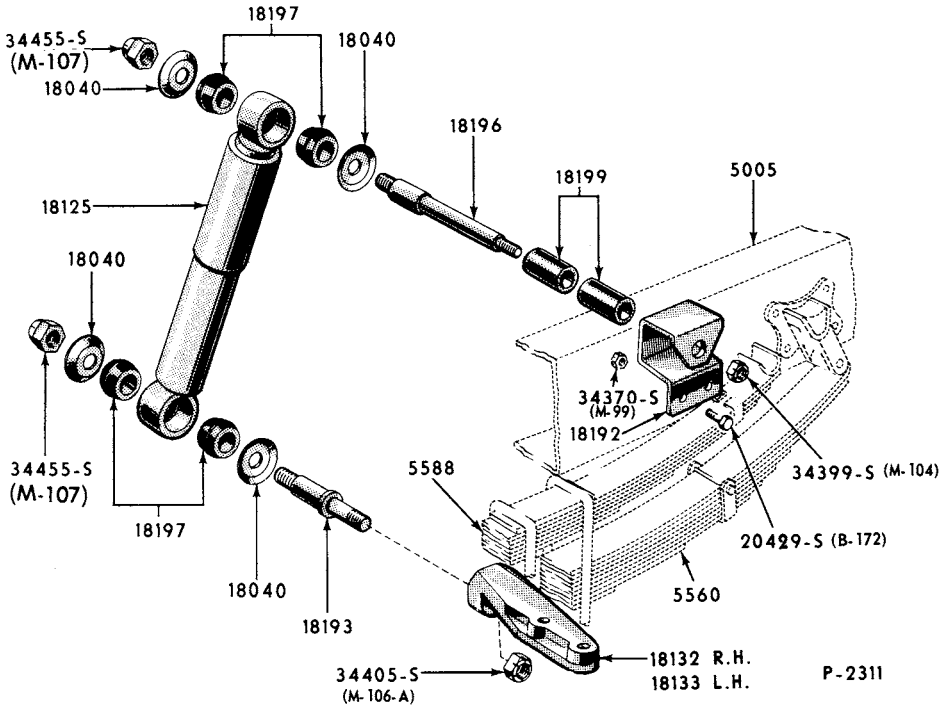

SHOCK ABSORBER PARTS (REAR)
1973/77 P500

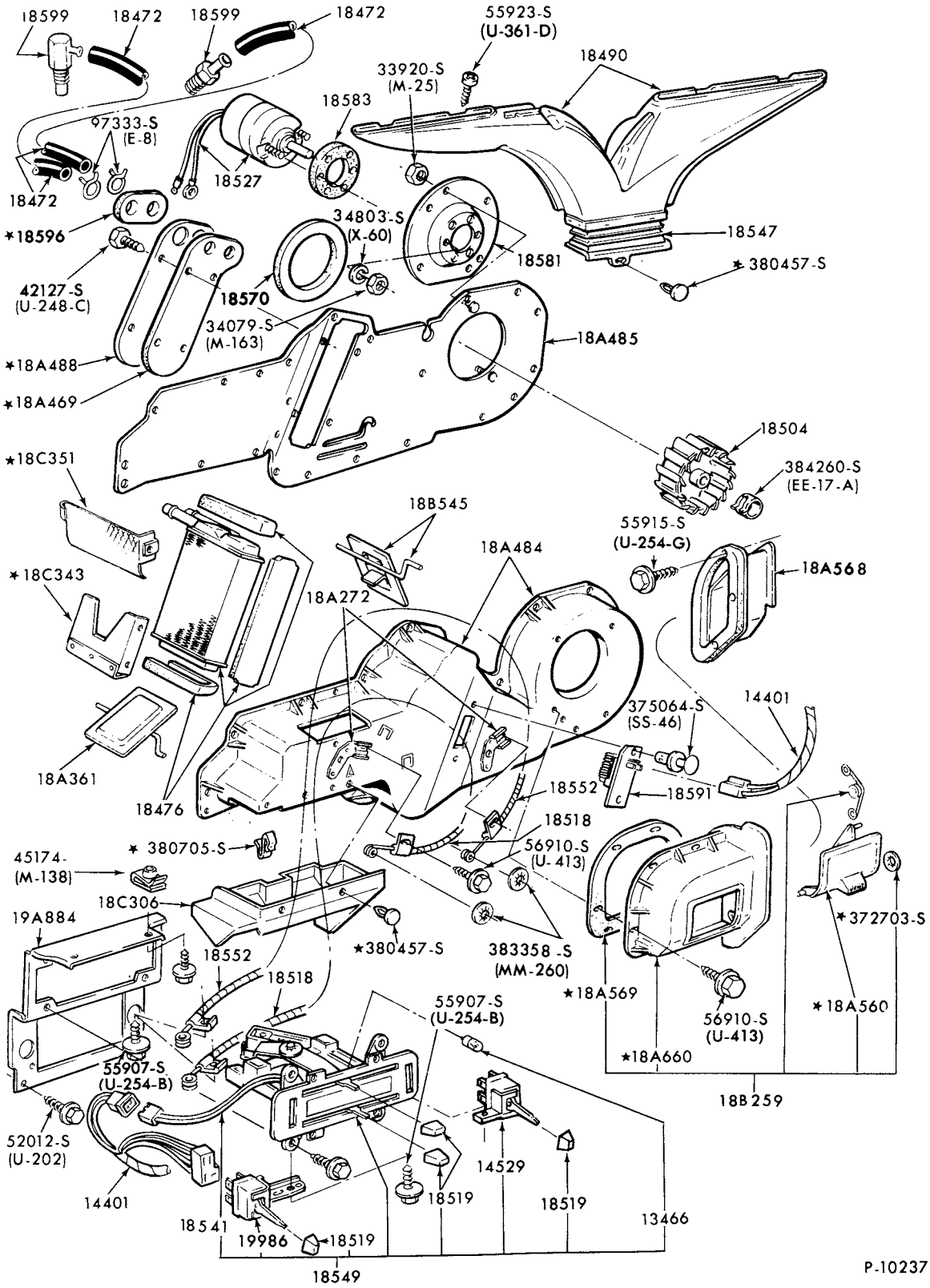

HEATER PARTS (FRESH AIR)
1973/ F100/350

COPYRIGHT © 1979 - FORD MOTOR - DEARBORN, MICHIGAN
COMPANY

1973/79 TRUCK SERIES 100/500

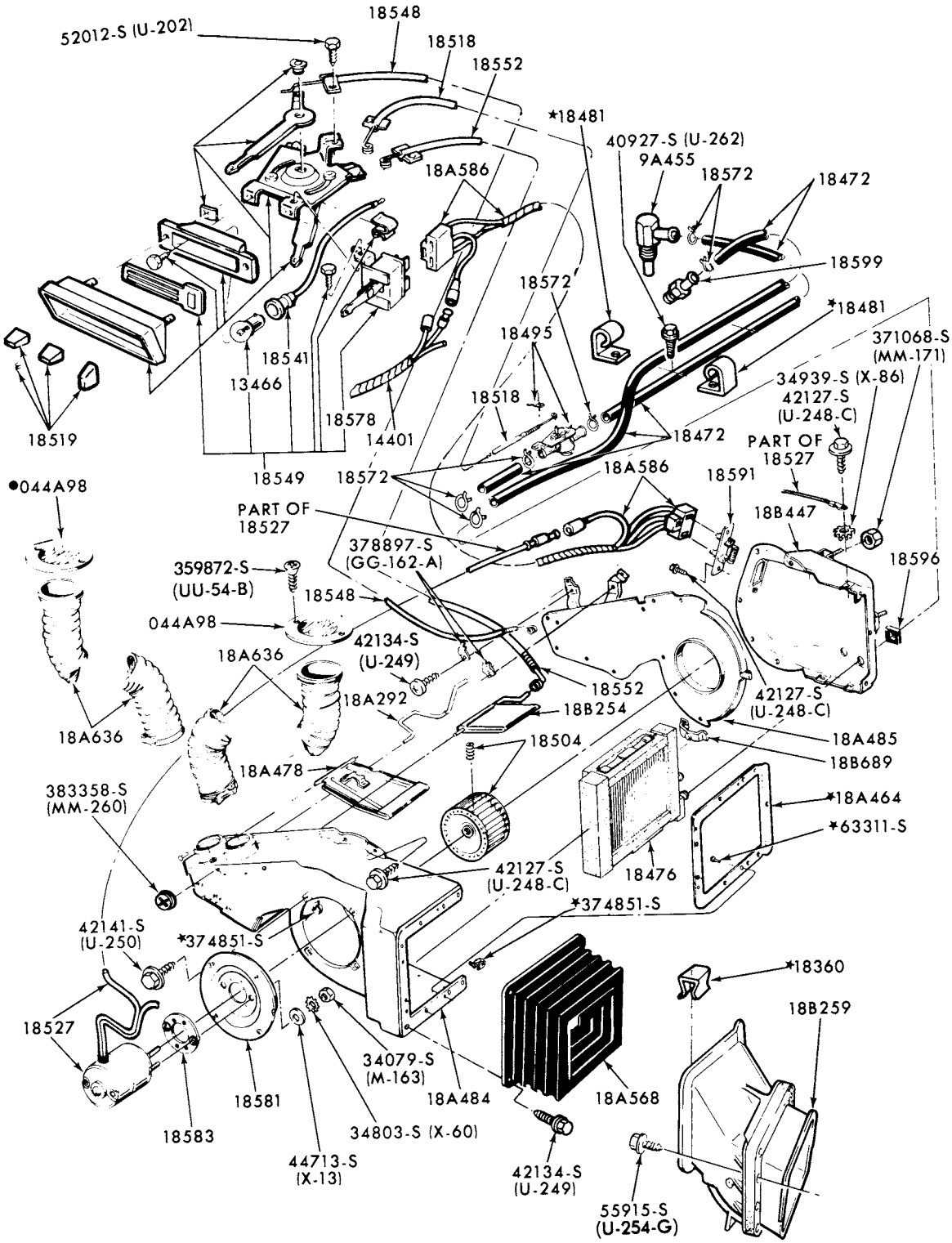

•REFER TO BODY SECTION

P-10232

HEATER PARTS (FRESH AIR)
1973/77 F500

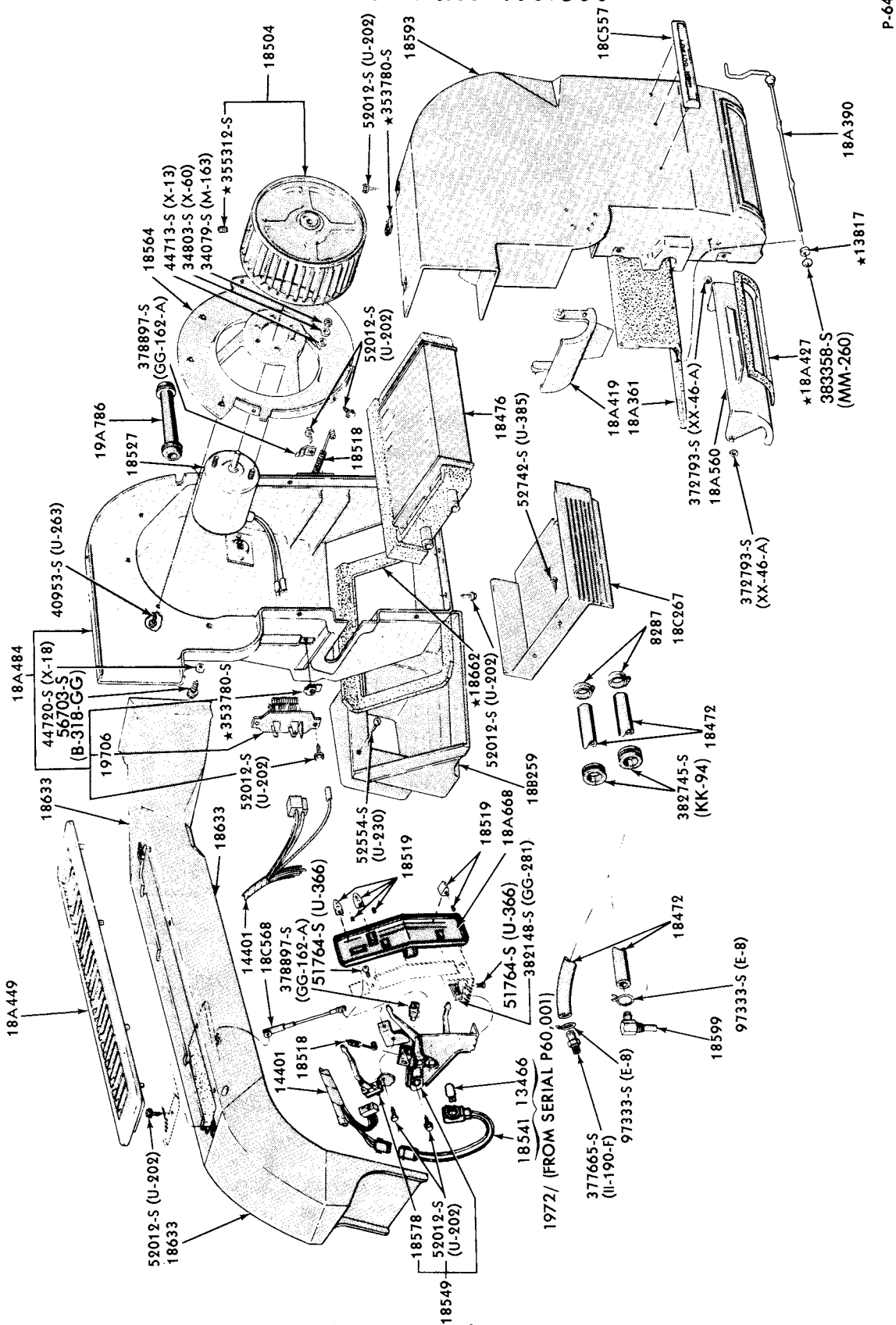

HEATER PARTS (FRESH AIR)
1973/ E100/300

COPYRIGHT © 1979 -FORD MOTOR—DEARBORN, MICHIGAN
COMPANY

1973/79 TRUCK SERIES 100/500

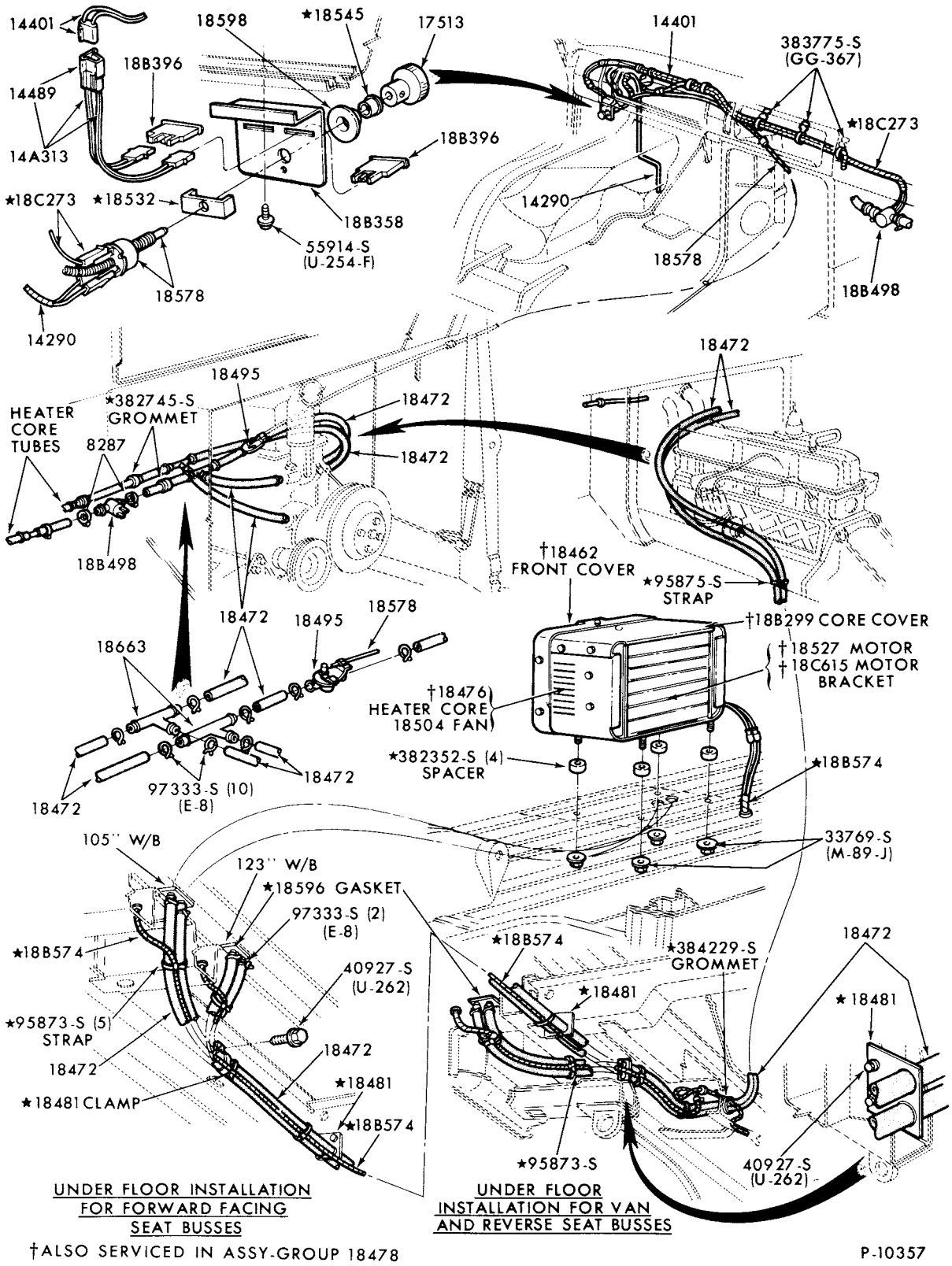

HEATER PARTS (AUXILIARY)

1973/74 E100/300

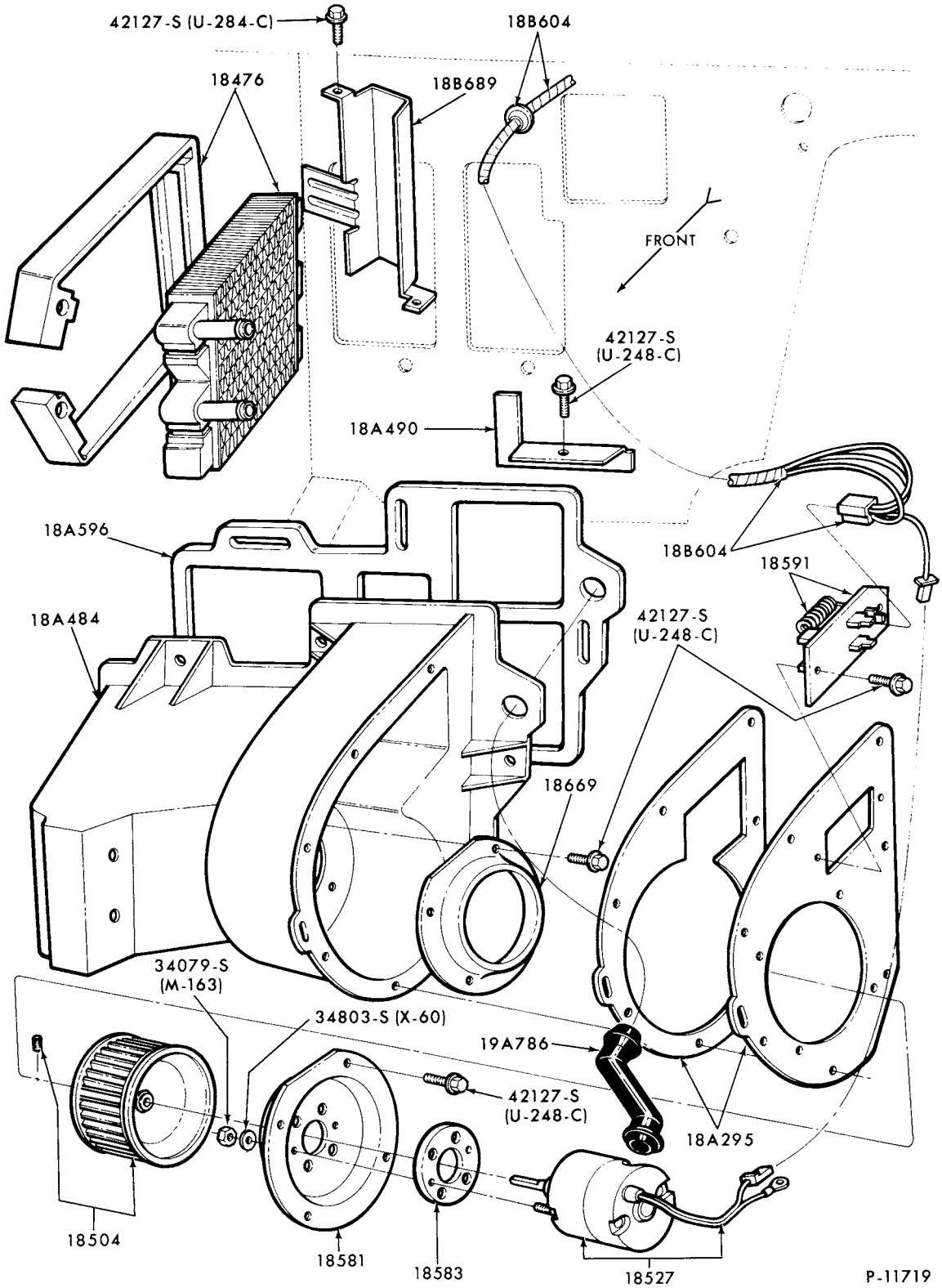

HEATER PARTS (FRESH AIR) ENGINE COMPARTMENT
1975/ E100/350

COPYRIGHT © 1979-FORD MOTOR-DEARBORN, MICHIGAN COMPANY

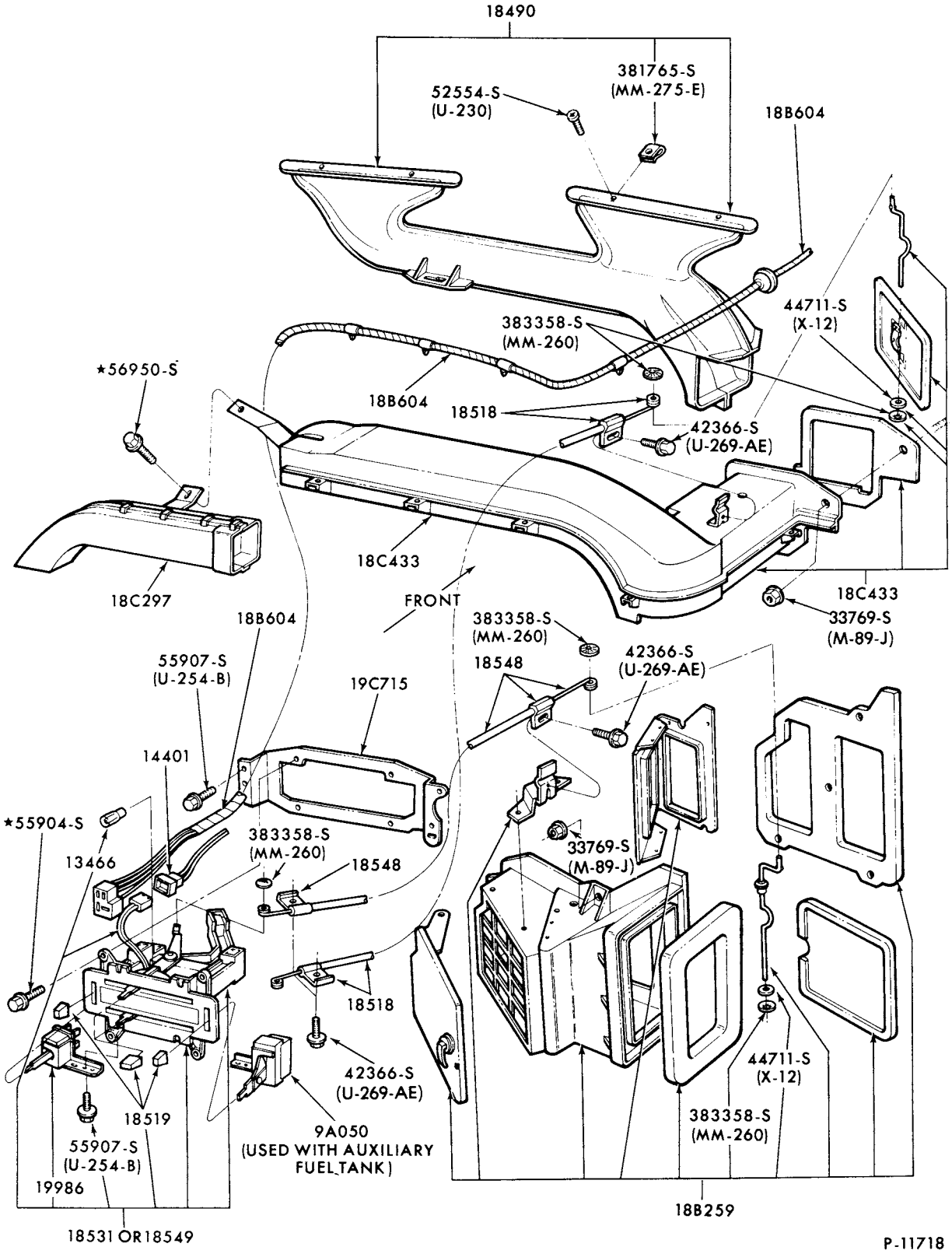

HEATER PARTS (FRESH AIR) - PASSENGER COMPARTMENT
1975/ E100/350

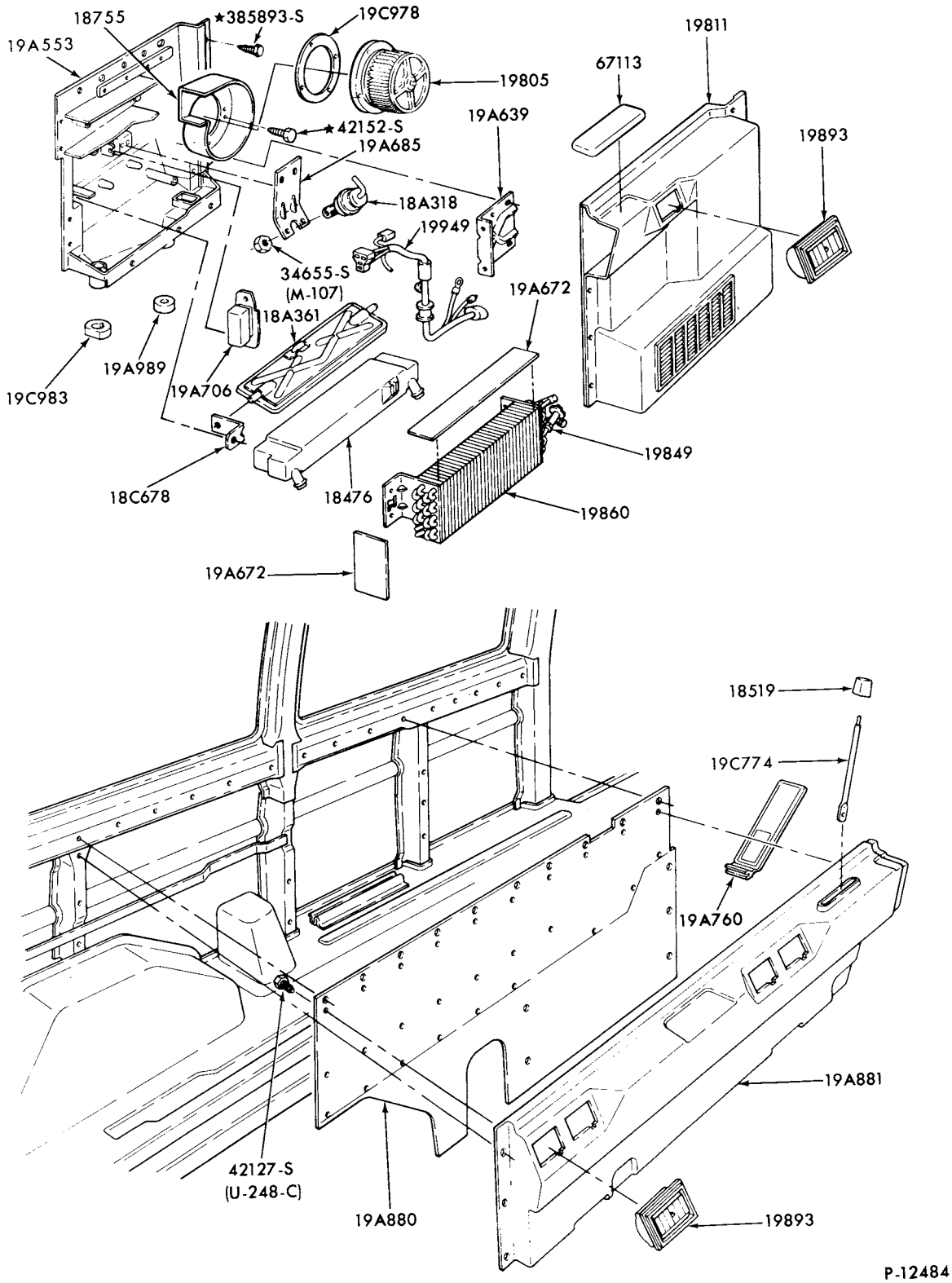

HEATER PARTS (AUXILIARY)
1975/ E100/350

COPYRIGHT © 1979-FORD MOTOR-DEARBORN, MICHIGAN
COMPANY

1973/79 TRUCK SERIES 100/500

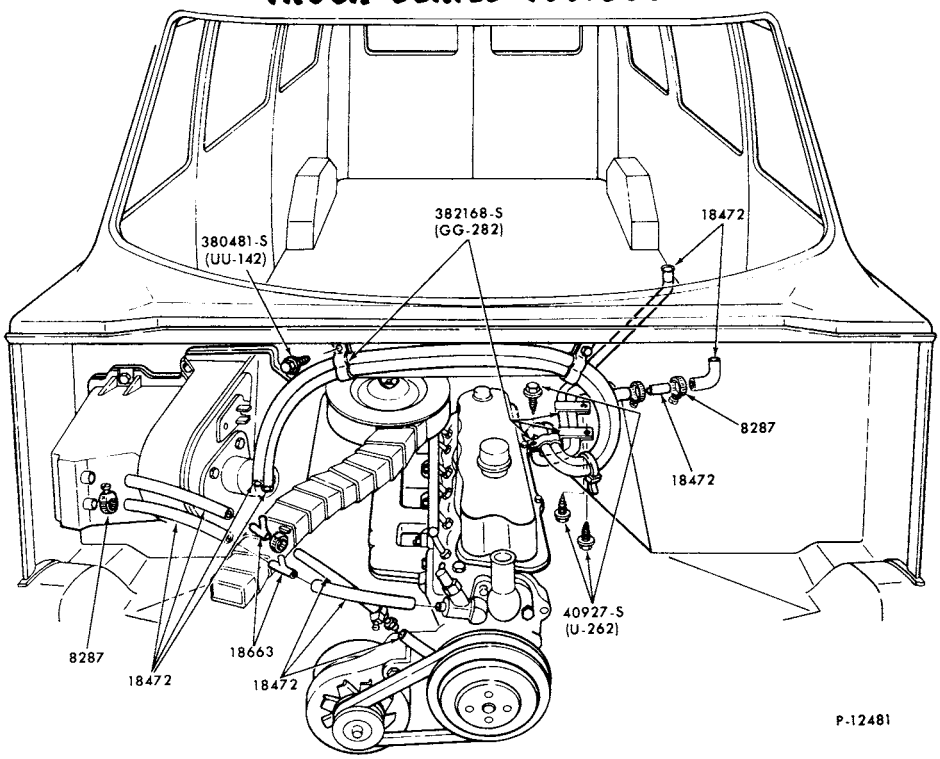

HEATER HOSES (AUXILIARY)
1975/ E100/350--6 CYL.

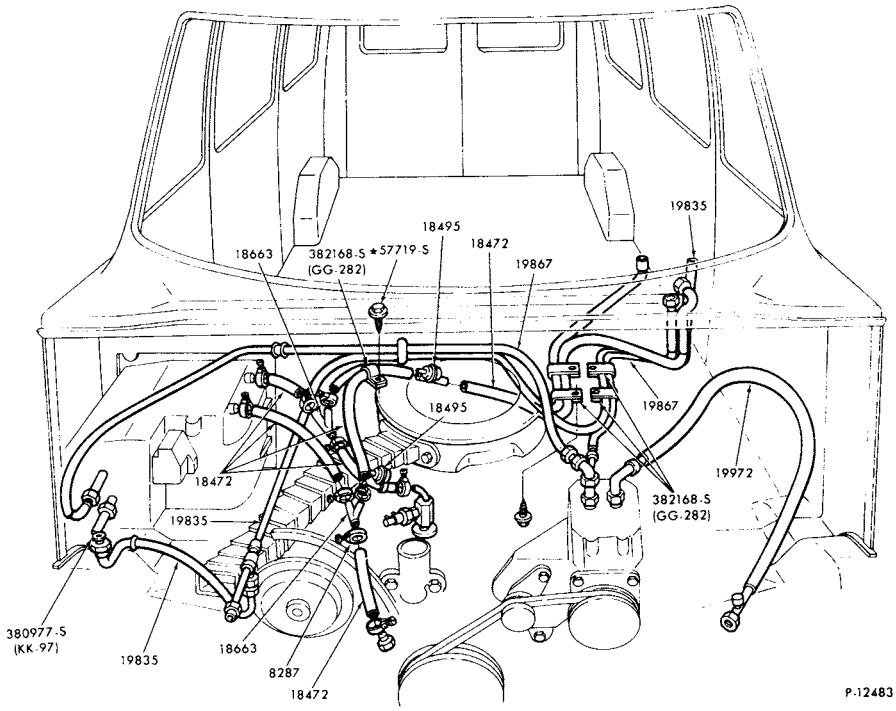

HEATER HOSES (AUXILIARY)
1975/ E100/350--8 CYL. with AUXILIARY A/C

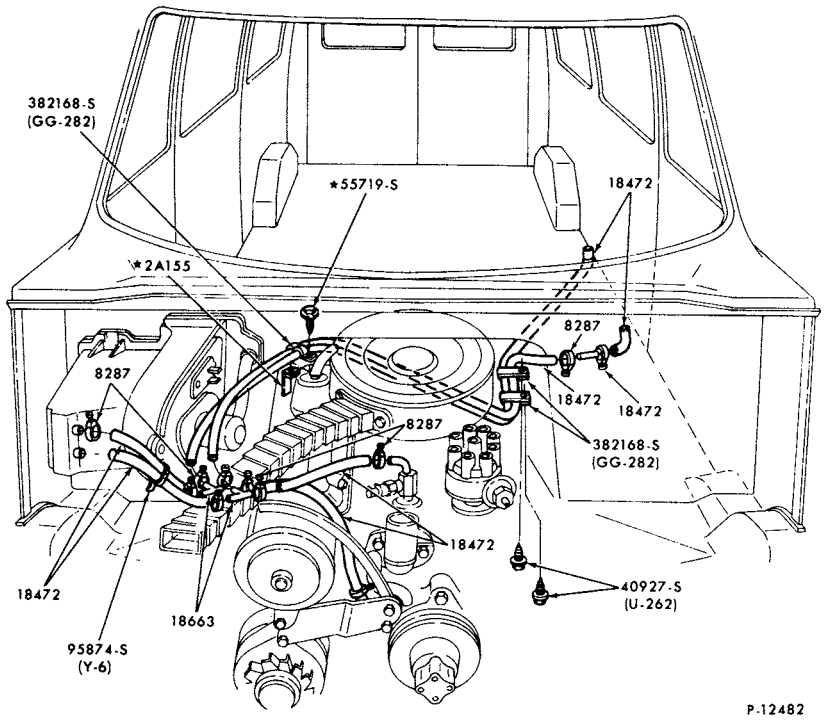

HEATER HOSES (AUXILIARY)
1975/ E100/350--8 CYL. w/o AUXILIARY A/C

COPYRIGHT © 1979 -FORD MOTOR-DEARBORN, MICHIGAN
COMPANY

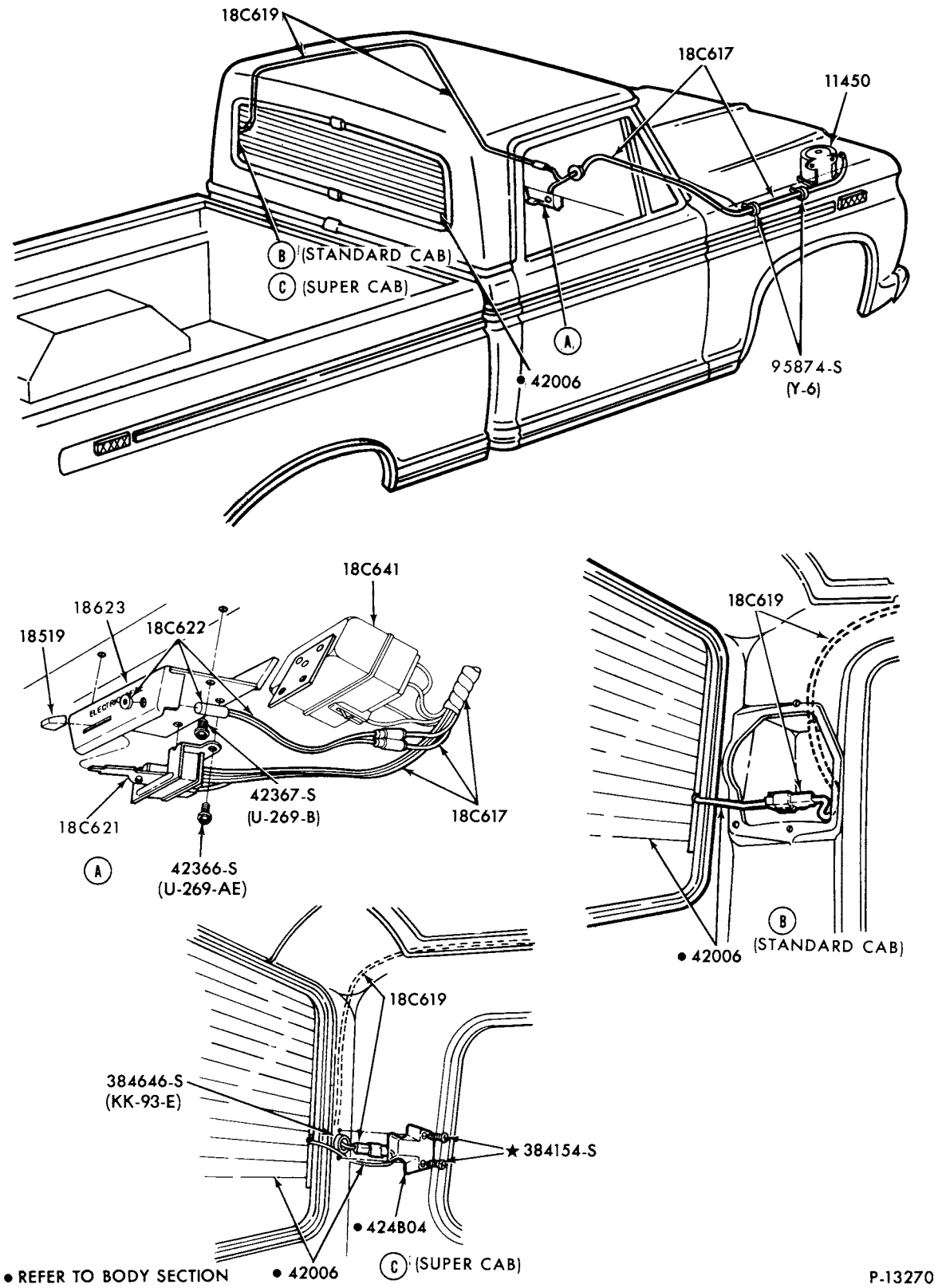

HEATED BACK WINDOW (DEFROSTER)
1977 F100/350 (81)

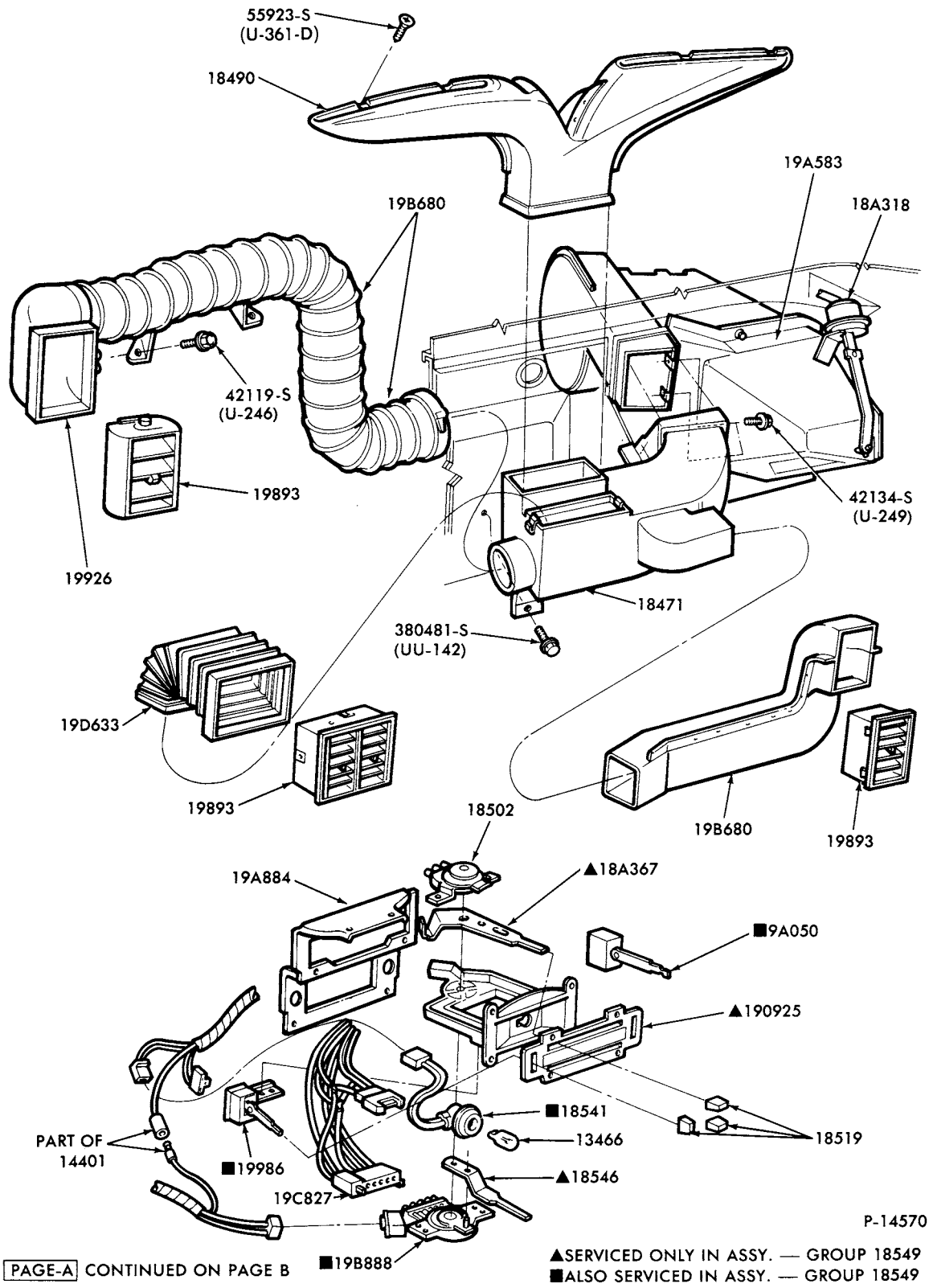

PAGE-A CONTINUED ON PAGE B

▲SERVICED ONLY IN ASSY. — GROUP 18549
■ALSO SERVICED IN ASSY. — GROUP 18549

HEATER CONTROLS - DELUXE HI-LO COMFORTVENT SYSTEM
1978/ F100/250--PAGE A

COPYRIGHT © 1979 FORD MOTOR COMPANY, DEARBORN, MICHIGAN

1973/79 TRUCK SERIES 100/500

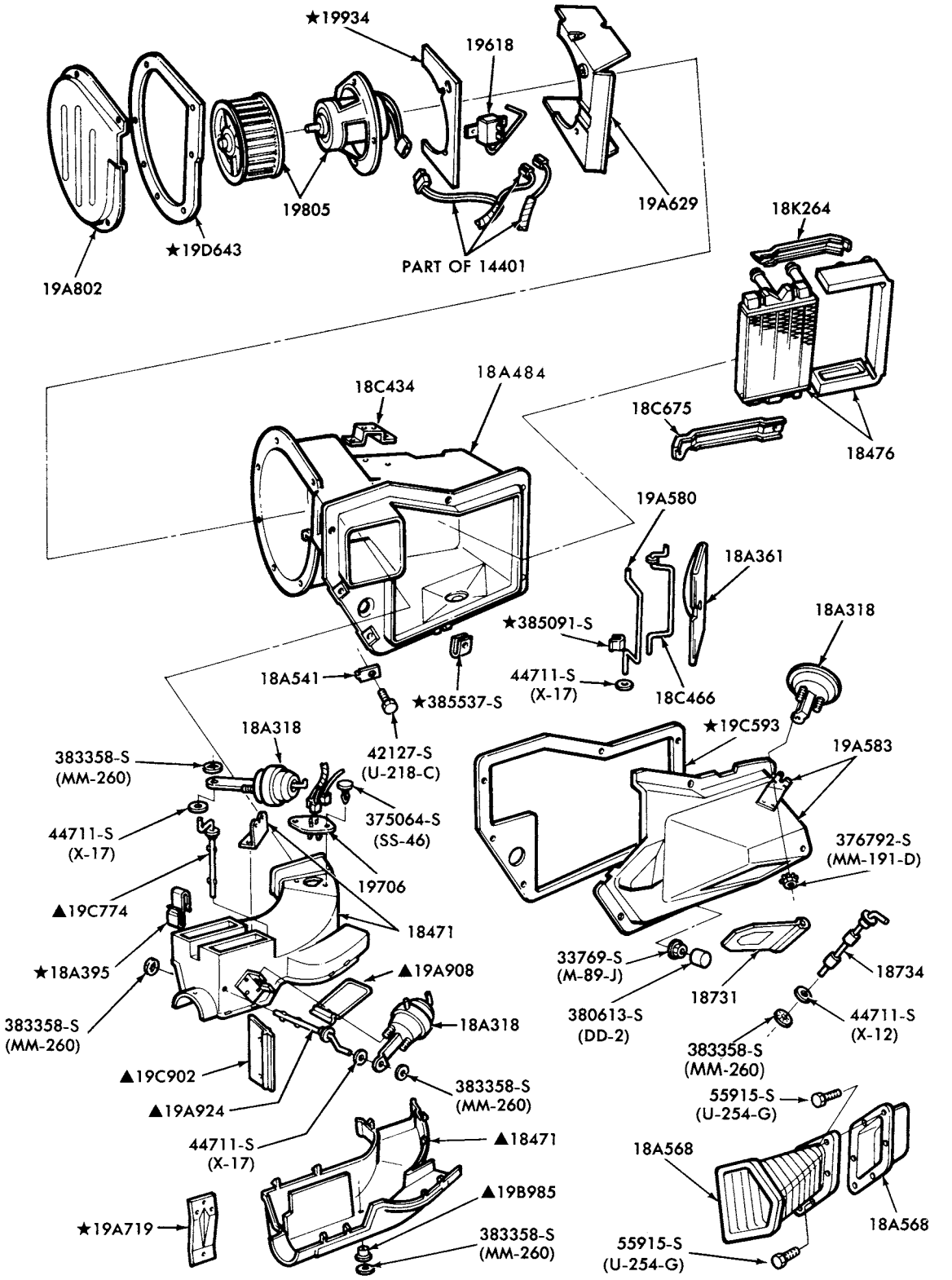

▲SERVICED ONLY IN ASSY. — GROUP 18471 PAGE-B CONTINUED ON PAGE C P-14571

HEATER - DELUXE HI-LO COMFORTVENT SYSTEM
1978/ F100/350--PAGE B

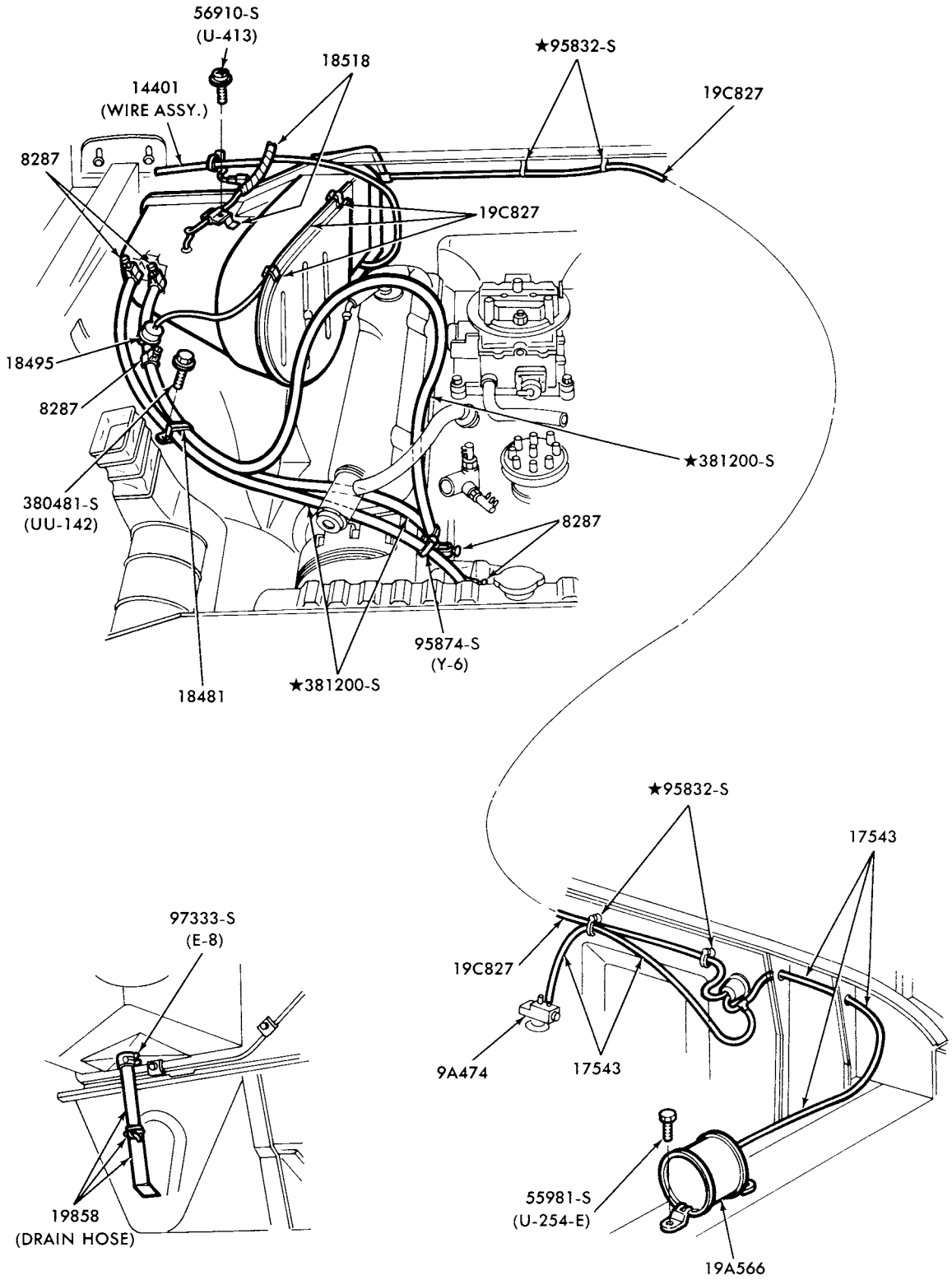

PAGE C CONTINUED

P-14572

HEATER HOSE, VACUUM HOSE and VALVE - DELUXE HI-LO COMFORTVENT SYSTEM
1978/ F100/350--PAGE C

COPYRIGHT © 1979 FORD MOTOR-DEARBORN, MICHIGAN COMPANY

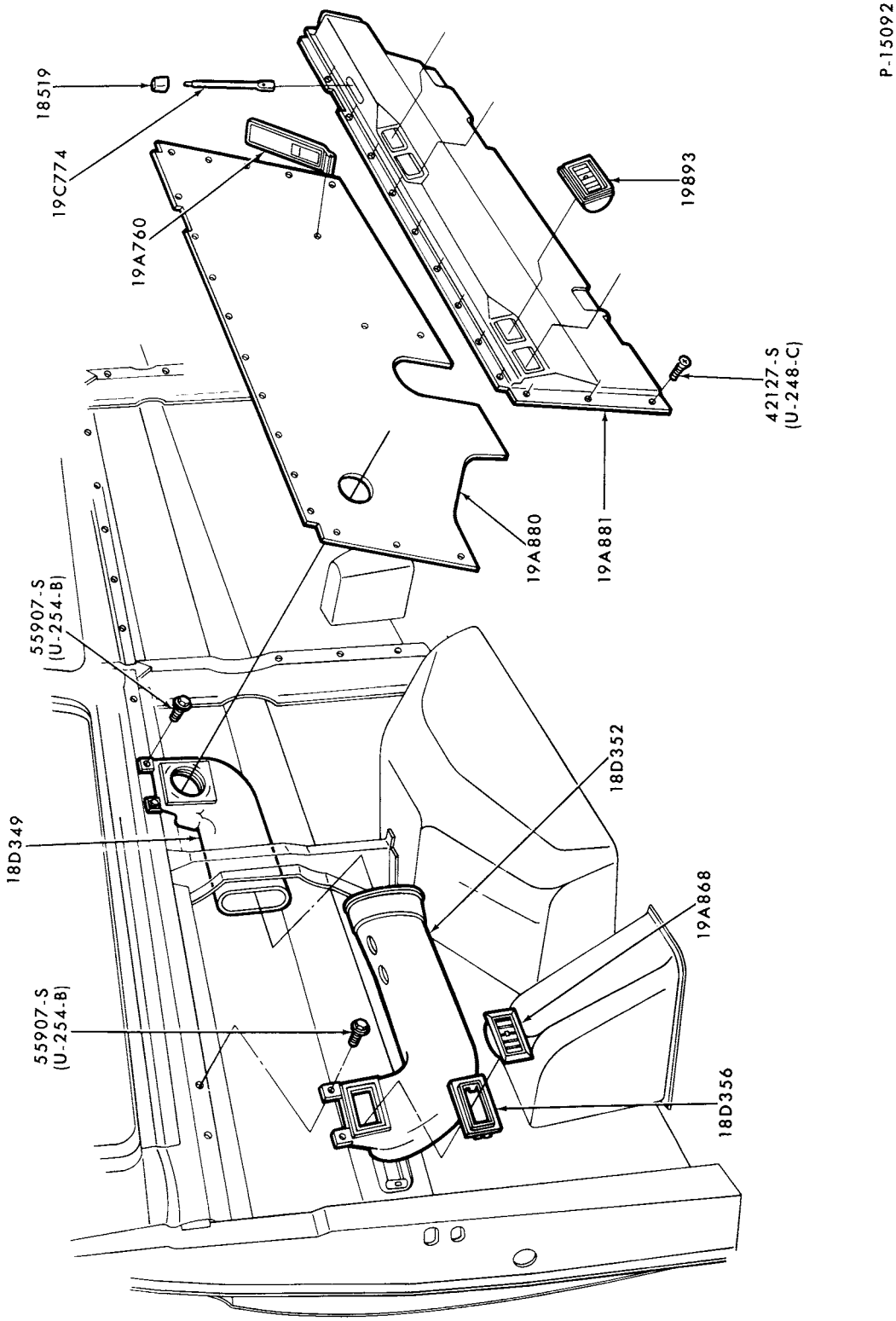

HEATER
DUCTS and REGISTER - (SUPER/VAN WAGON)
1978/ E150/300

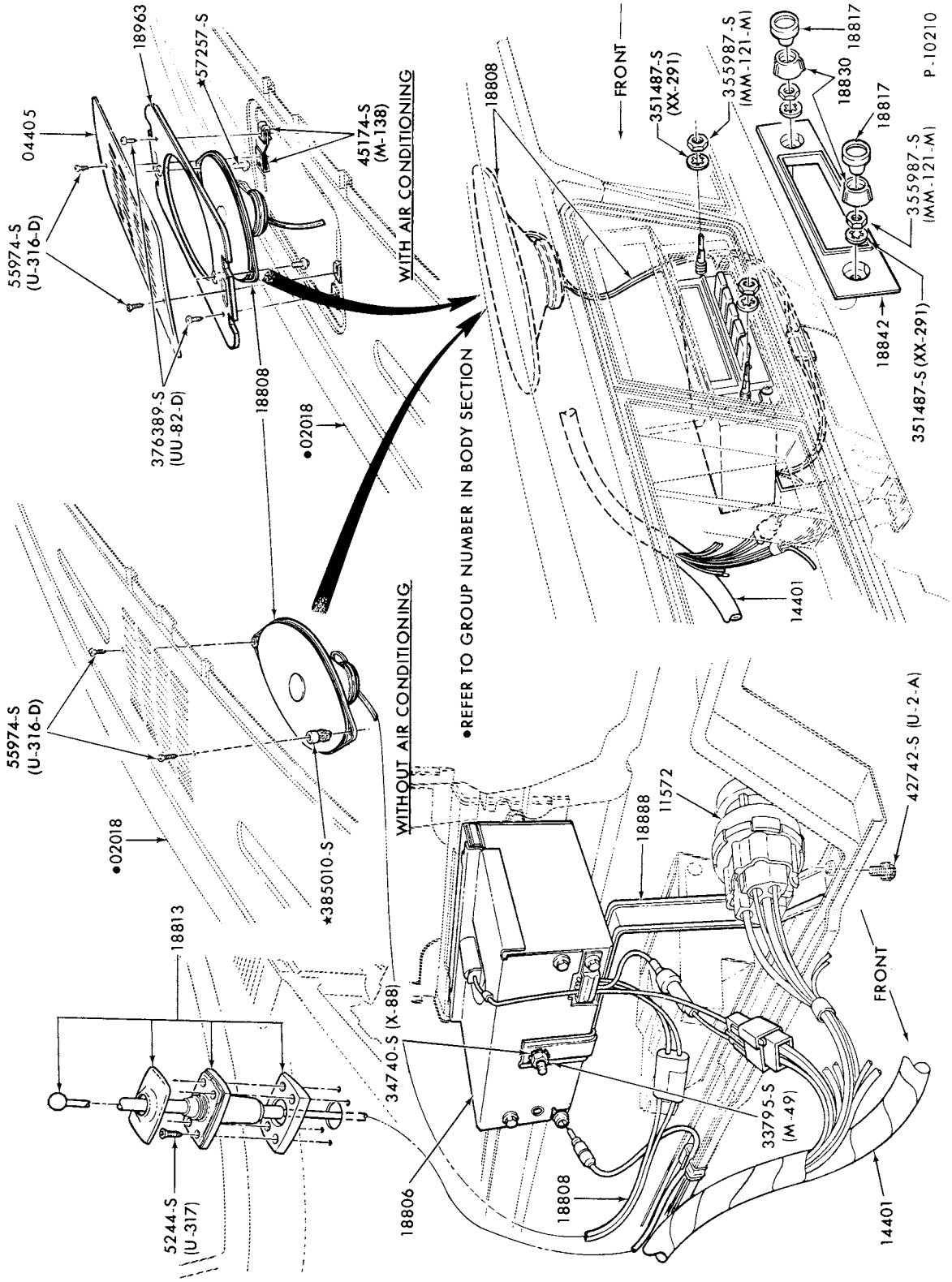

RADIO RECEIVER and ANTENNA
1973/ F100/350

COPYRIGHT © 1979 FORD MOTOR COMPANY—DEARBORN, MICHIGAN

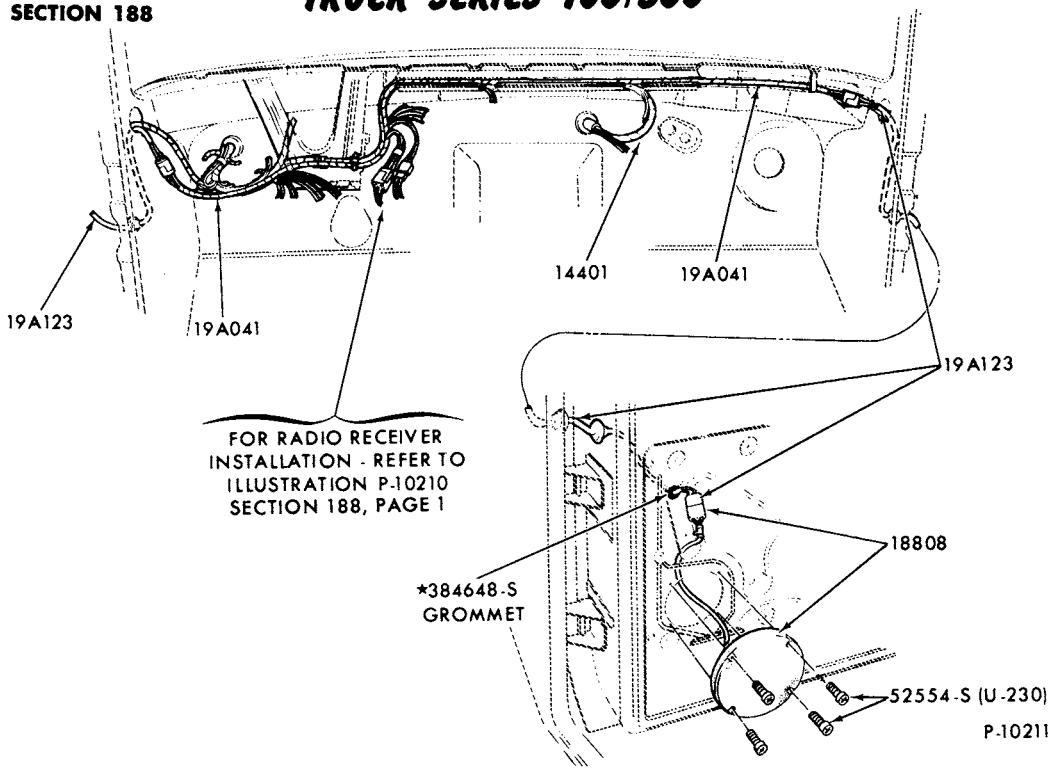

STEREO DOOR SPEAKERS and WIRING
1973/ F100/350

P-10212

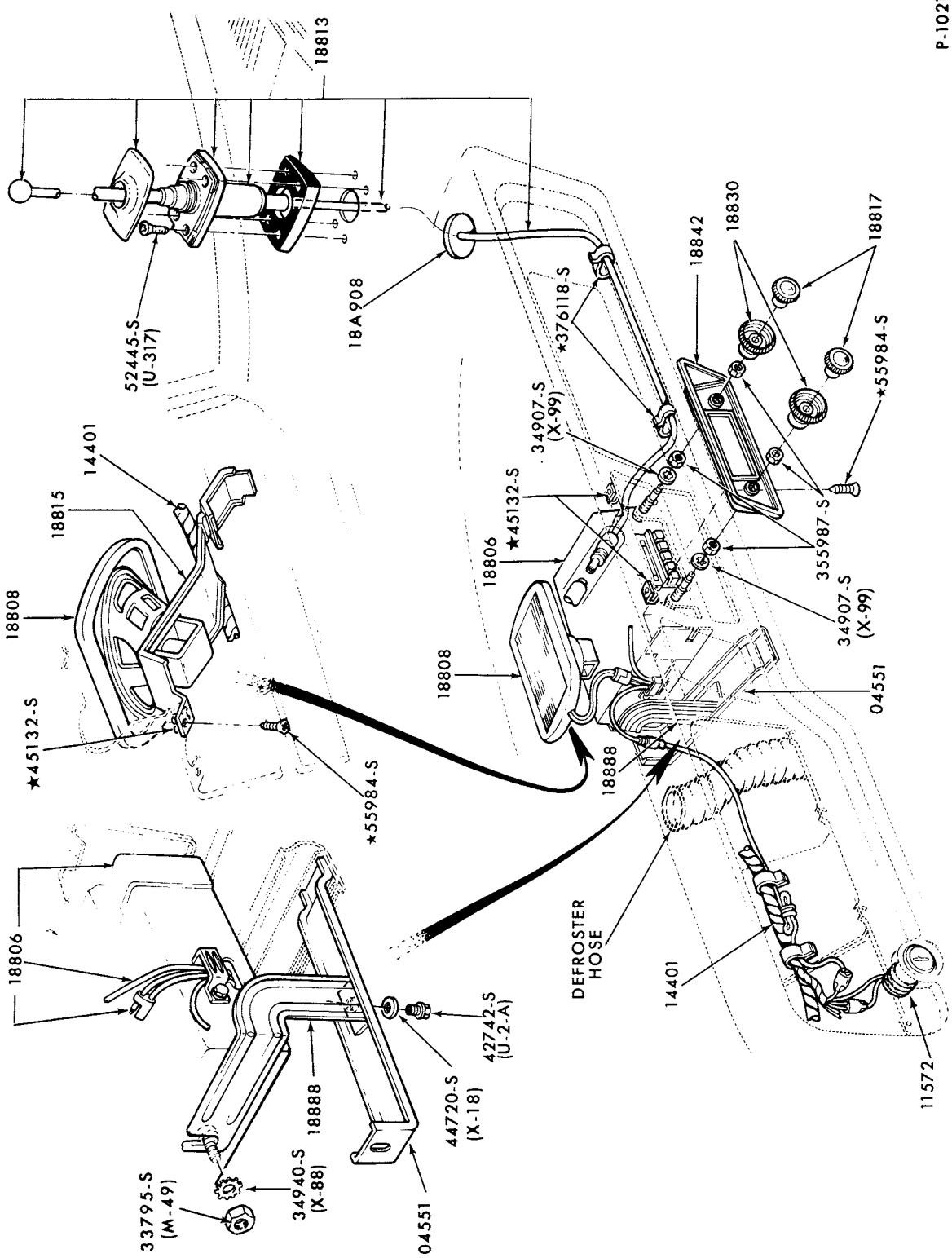

RADIO RECEIVER and ANTENNA
1973/77 F500

COPYRIGHT © 1979—FORD MOTOR—DEARBORN, MICHIGAN
COMPANY

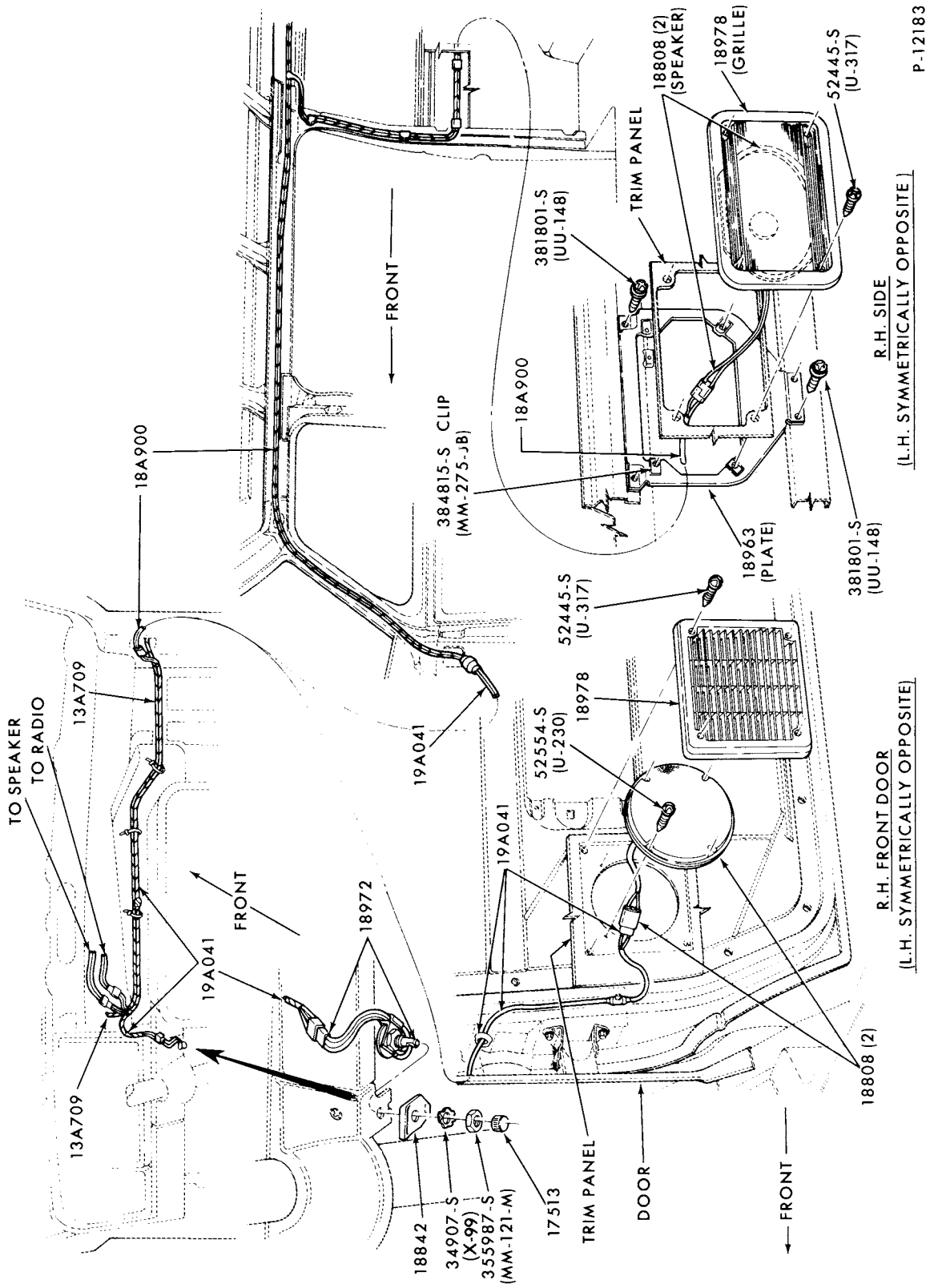

RADIO SPEAKERS, FRONT DOOR and REAR SIDE
1975/ E100/350

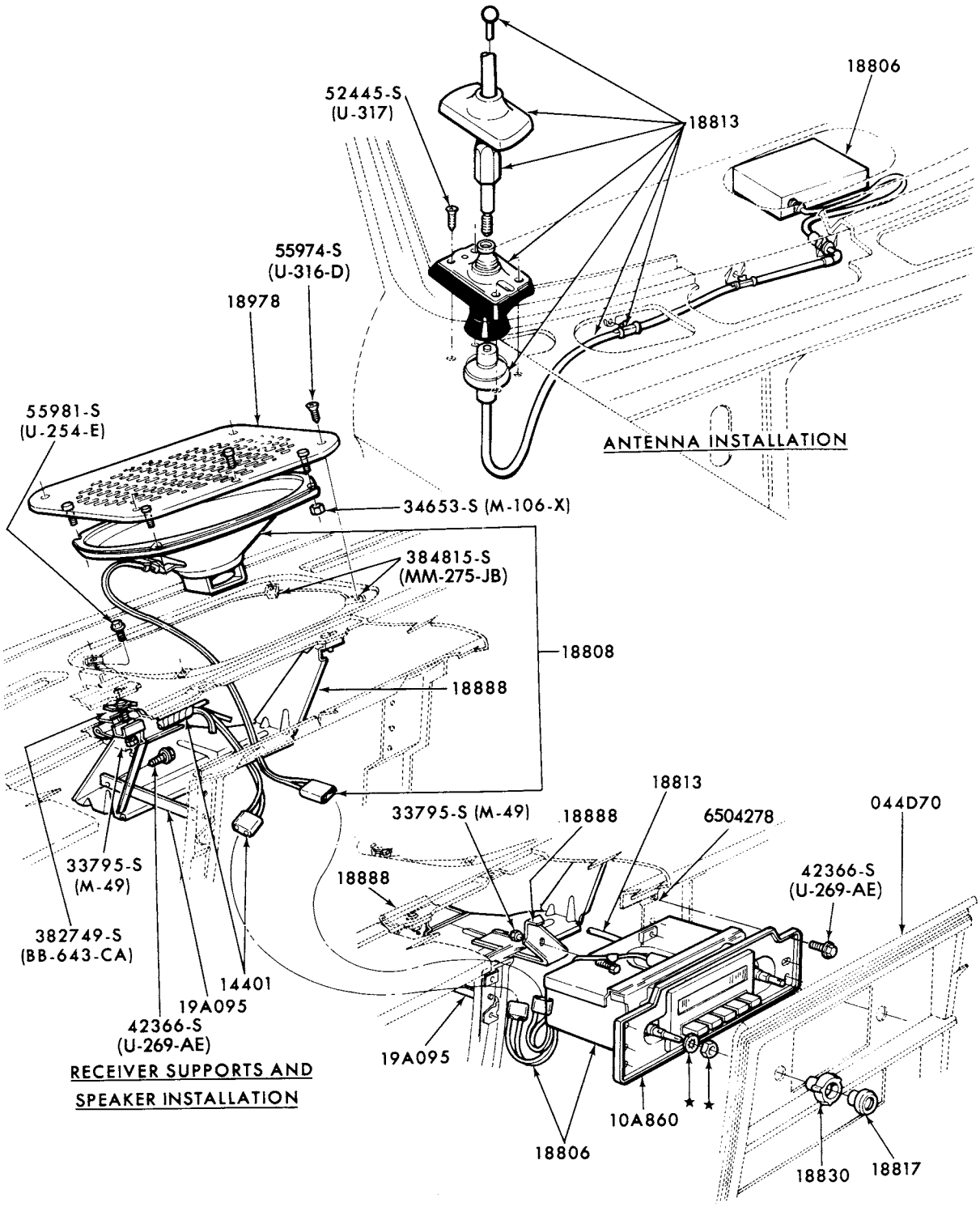

P-11520

RADIO RECEIVER, SPEAKER and ANTENNA PARTS
1975/ E100/350

COPYRIGHT © 1979 FORD MOTOR COMPANY, DEARBORN, MICHIGAN

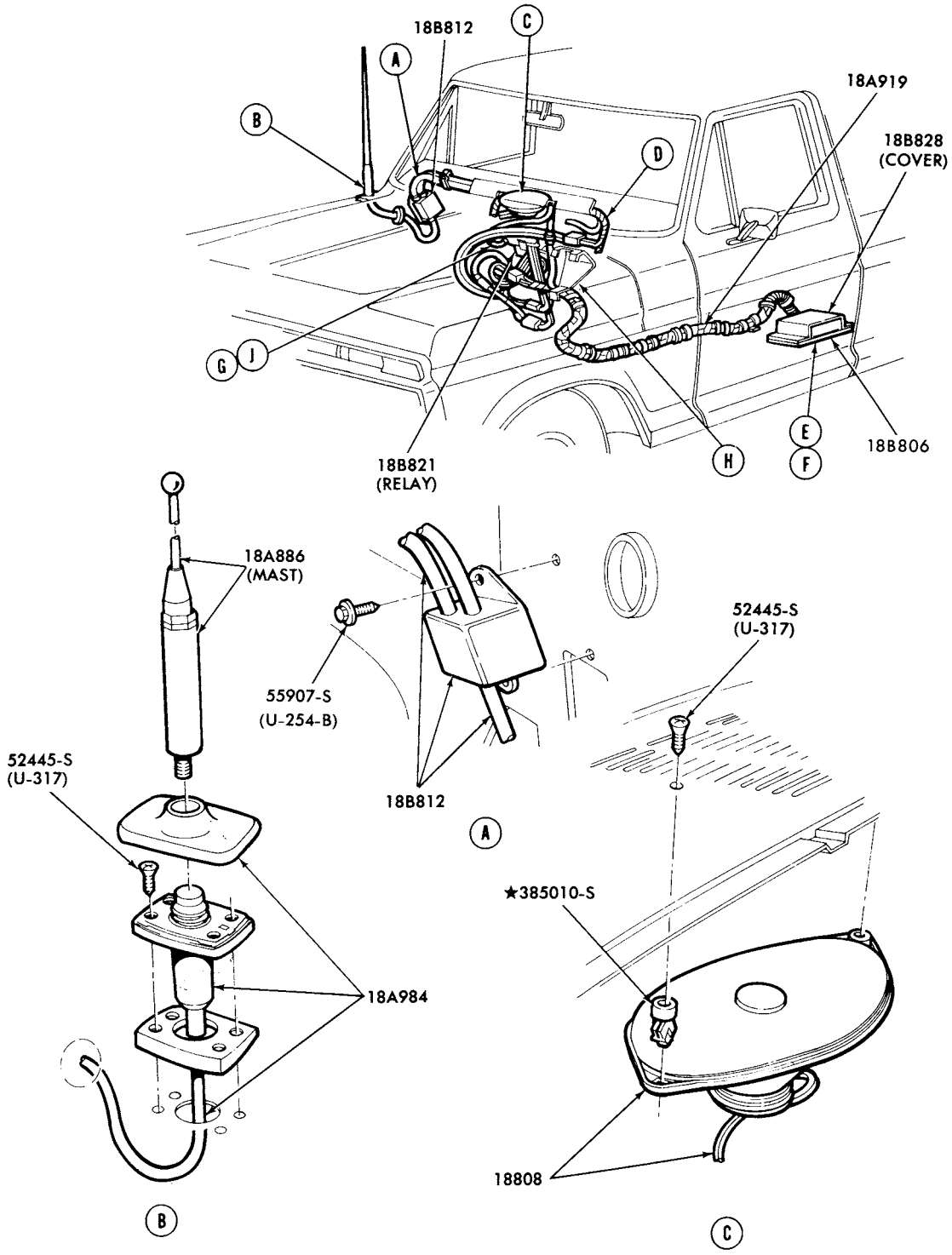

PAGE A CONTINUED ON PAGE—B AND PAGE C

P-14321

CITIZEN BAND (C.B.)-RECEIVER, WIRING, ANTENNA and RELATED PARTS-PAGE A
1978/ F100/350

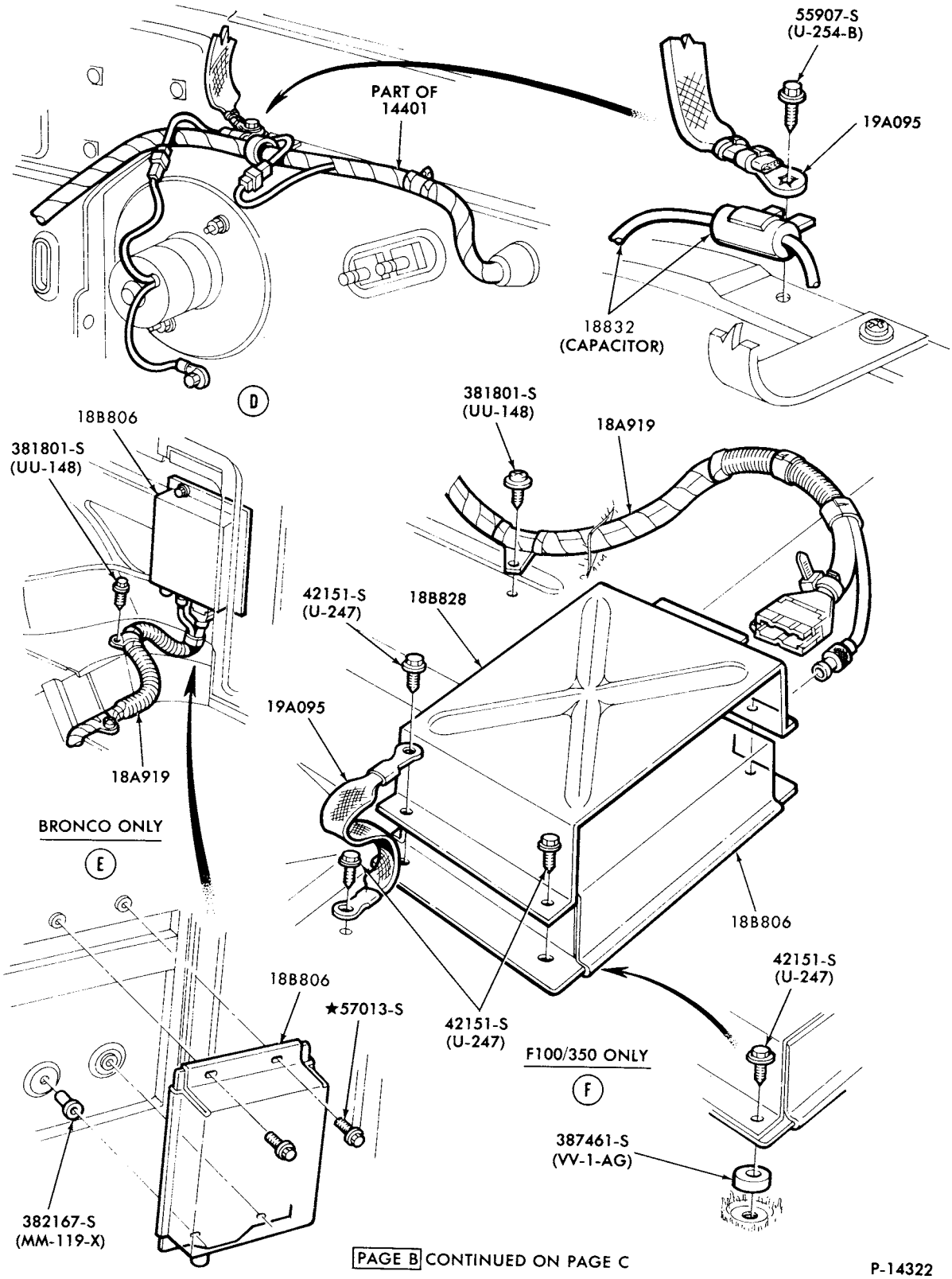

PAGE B CONTINUED ON PAGE C

P-14322

CITIZEN BAND (C.B.)-RECEIVER, WIRING, ANTENNA and RELATED PARTS-PAGE B
1978/ F100/350

COPYRIGHT © 1979 FORD MOTOR-DEARBORN, MICHIGAN COMPANY

1973/79 TRUCK SERIES 100/500

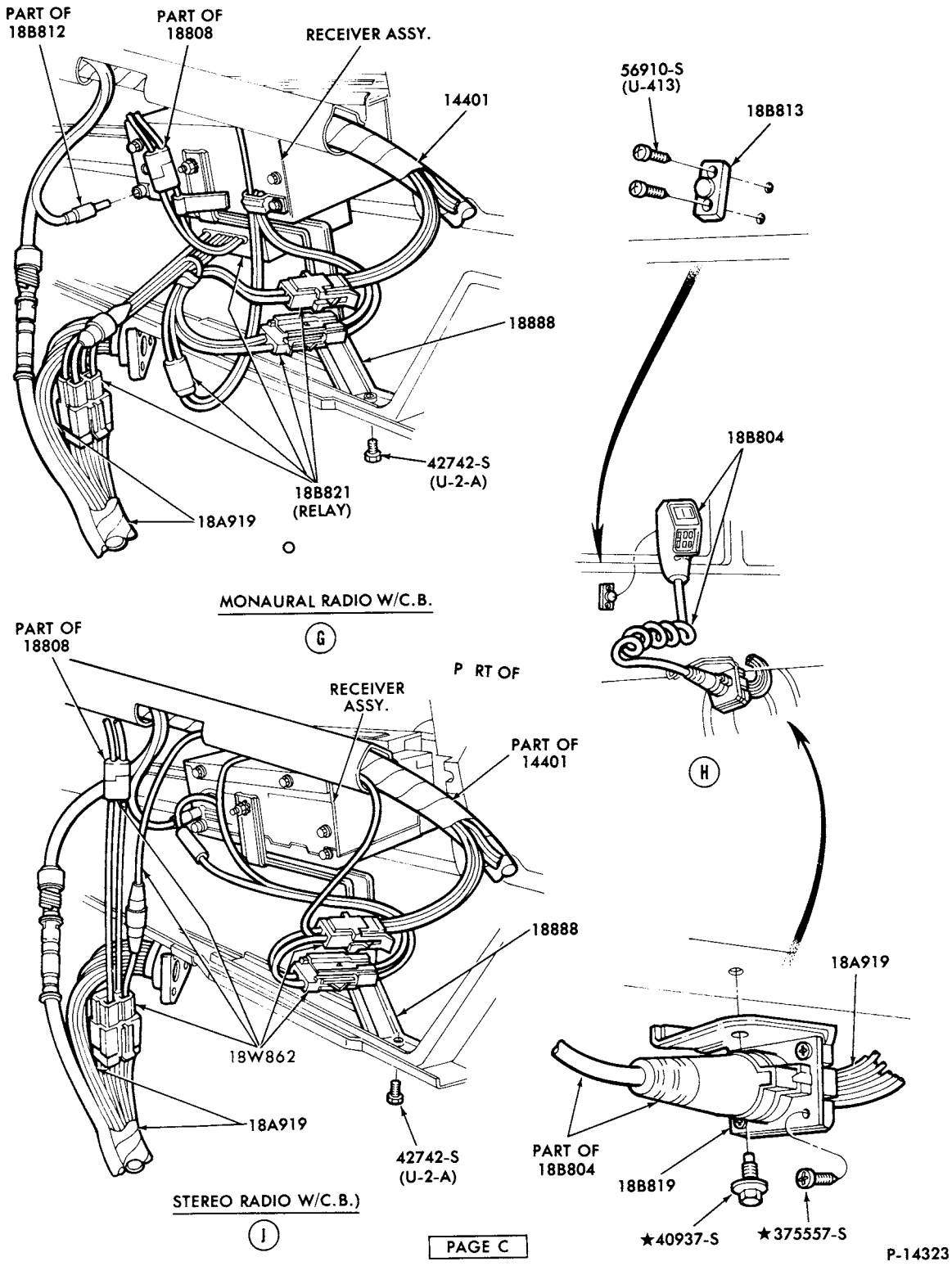

CITIZEN BAND (C.B.)-RECEIVER, WIRING, ANTENNA and RELATED PARTS-PAGE C
1978/ F100/350

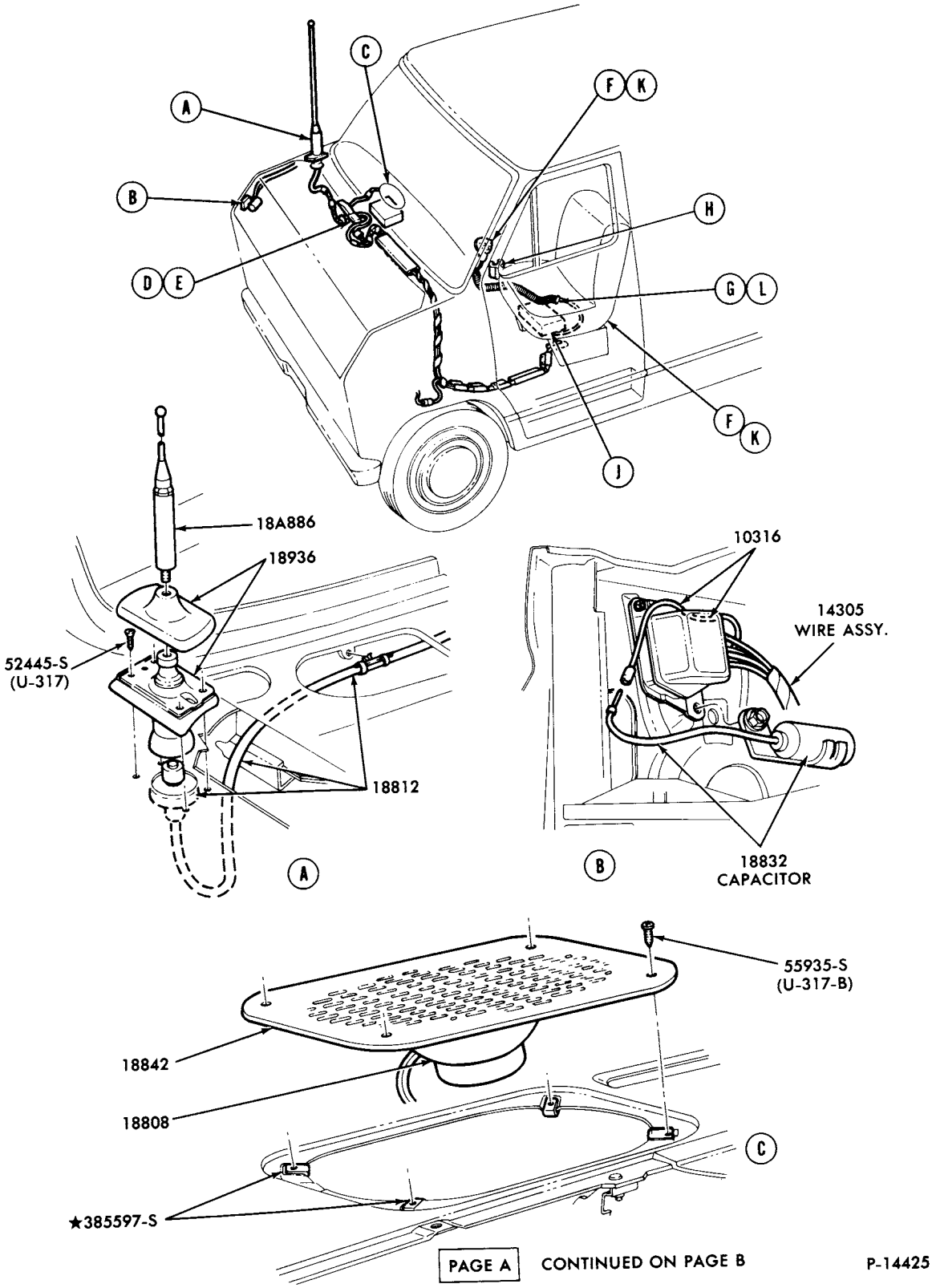

PAGE A CONTINUED ON PAGE B

P-14425

CITIZEN BAND (C.B.) RADIO and RELATED PARTS (PAGE A)
1978/ E100/350

COPYRIGHT © 1979 FORD MOTOR COMPANY, DEARBORN, MICHIGAN

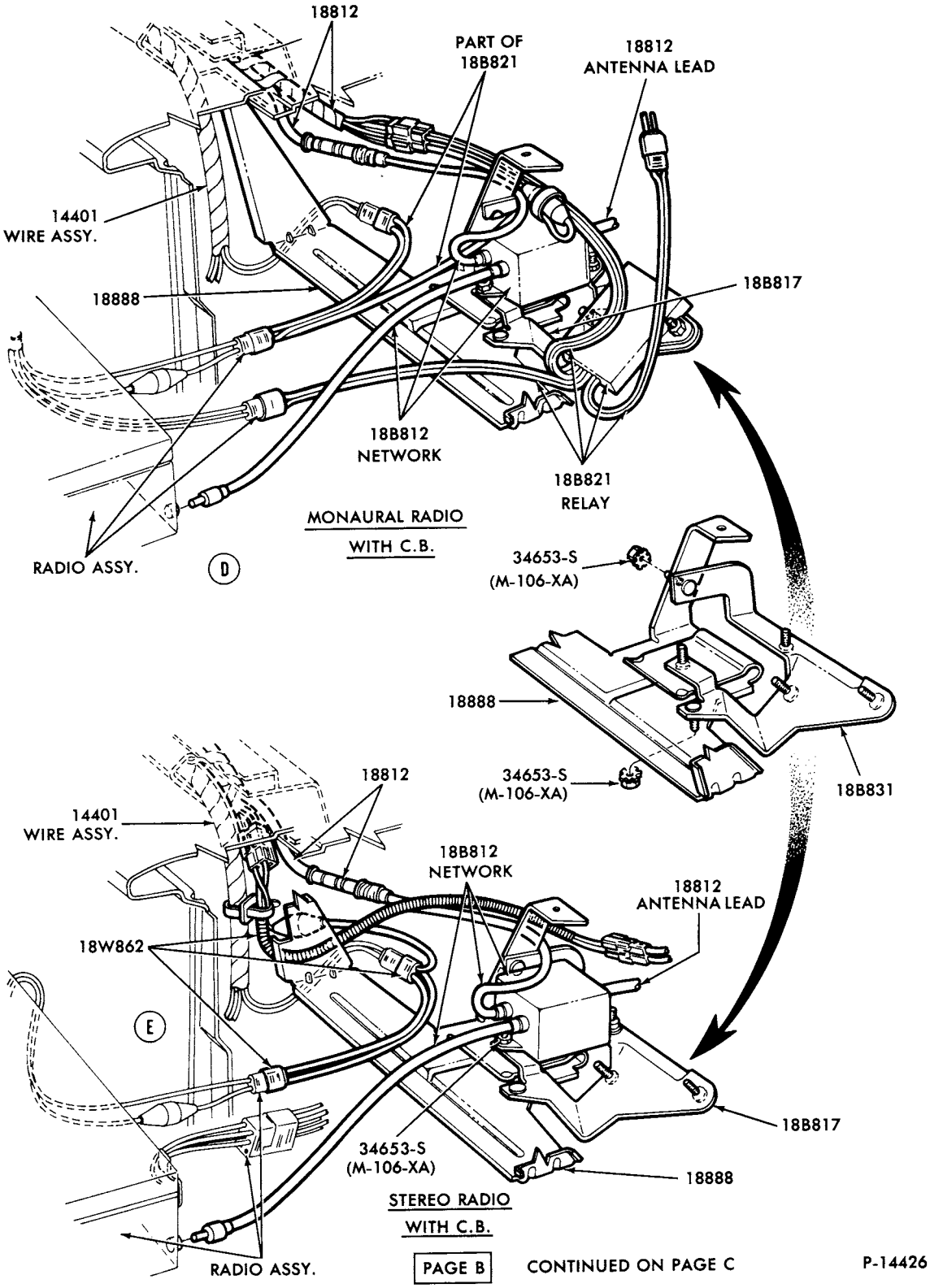

CITIZEN BAND (C.B.) RADIO and RELATED PARTS (PAGE B)
1978/ E100/350

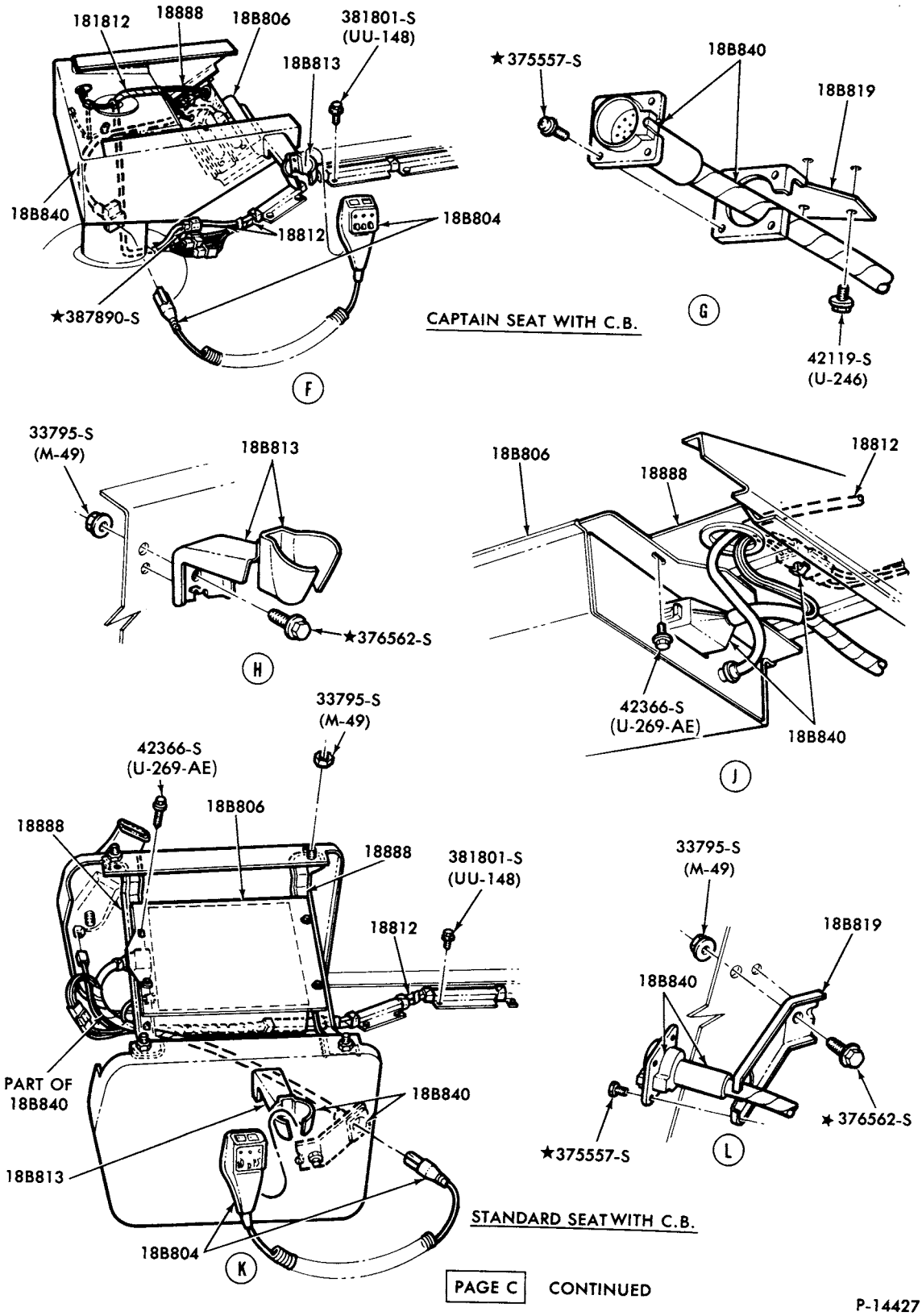

CITIZEN BAND (C.B.) RADIO and RELATED PARTS (PAGE C)
1978/ E100/350

COPYRIGHT © 1980— FORD MOTOR COMPANY —DEARBORN, MICHIGAN

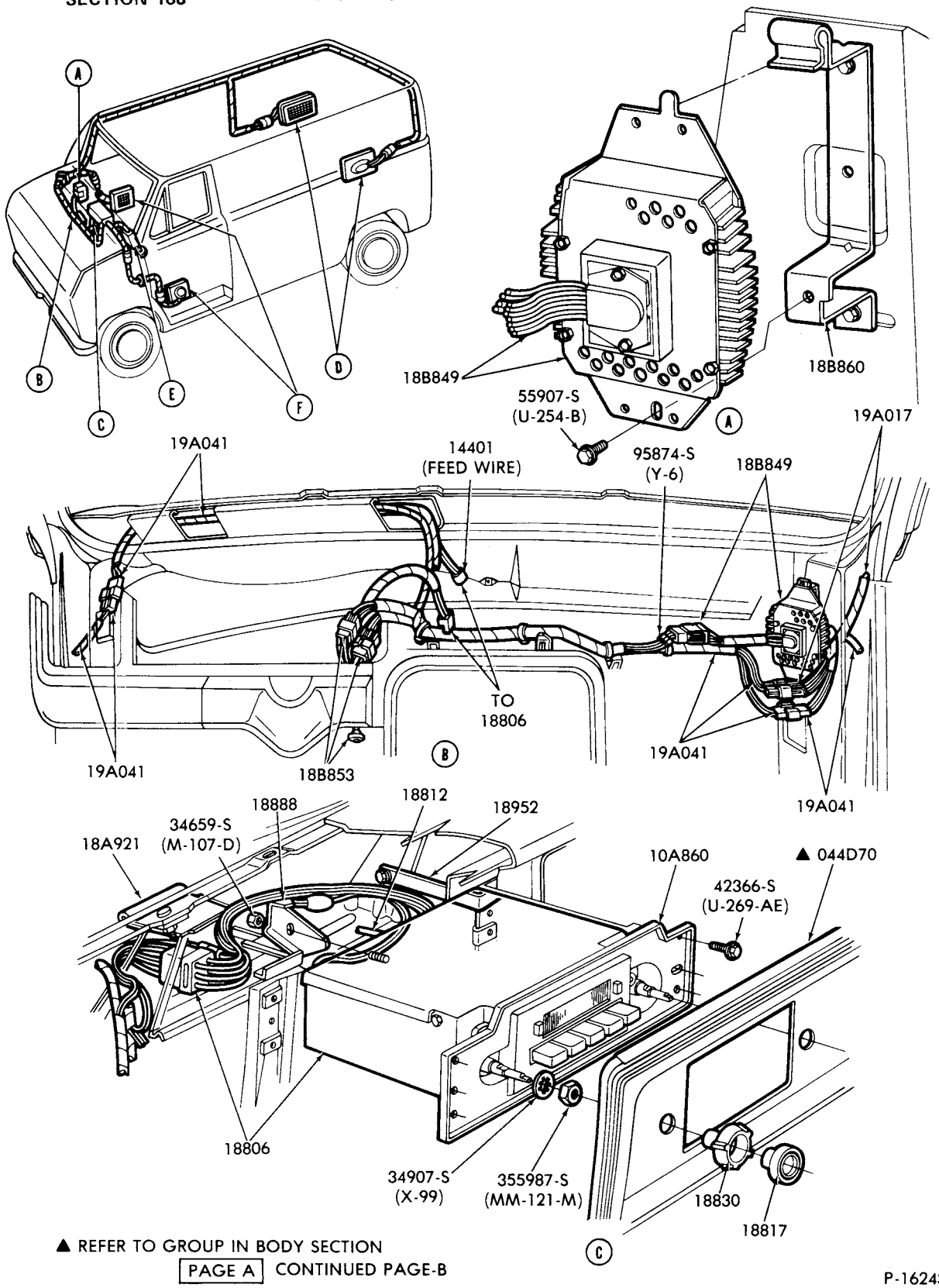

▲ REFER TO GROUP IN BODY SECTION

PAGE A CONTINUED PAGE-B

P-16243

PREMIUM SOUND - POWER SWITCH, AMPLIFIER and SPEAKER SYSTEM (PAGE A)
1979 E100/350

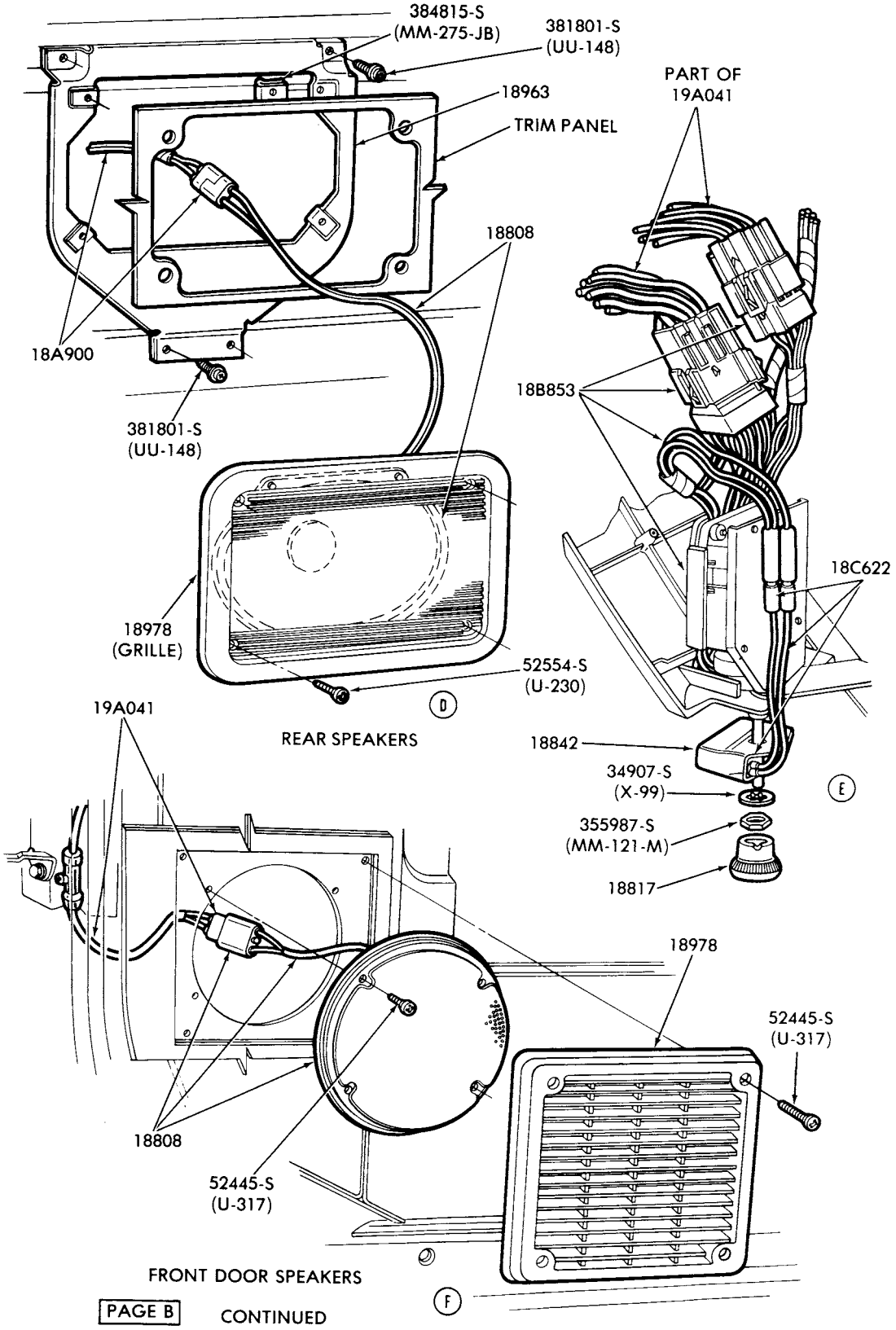

PAGE B CONTINUED

P-16244

PREMIUM SOUND - POWER SWITCH, AMPLIFIER and SPEAKER SYSTEM (PAGE B)
1979 E100/350

COPYRIGHT © 1980 FORD MOTOR-DEARBORN, MICHIGAN COMPANY

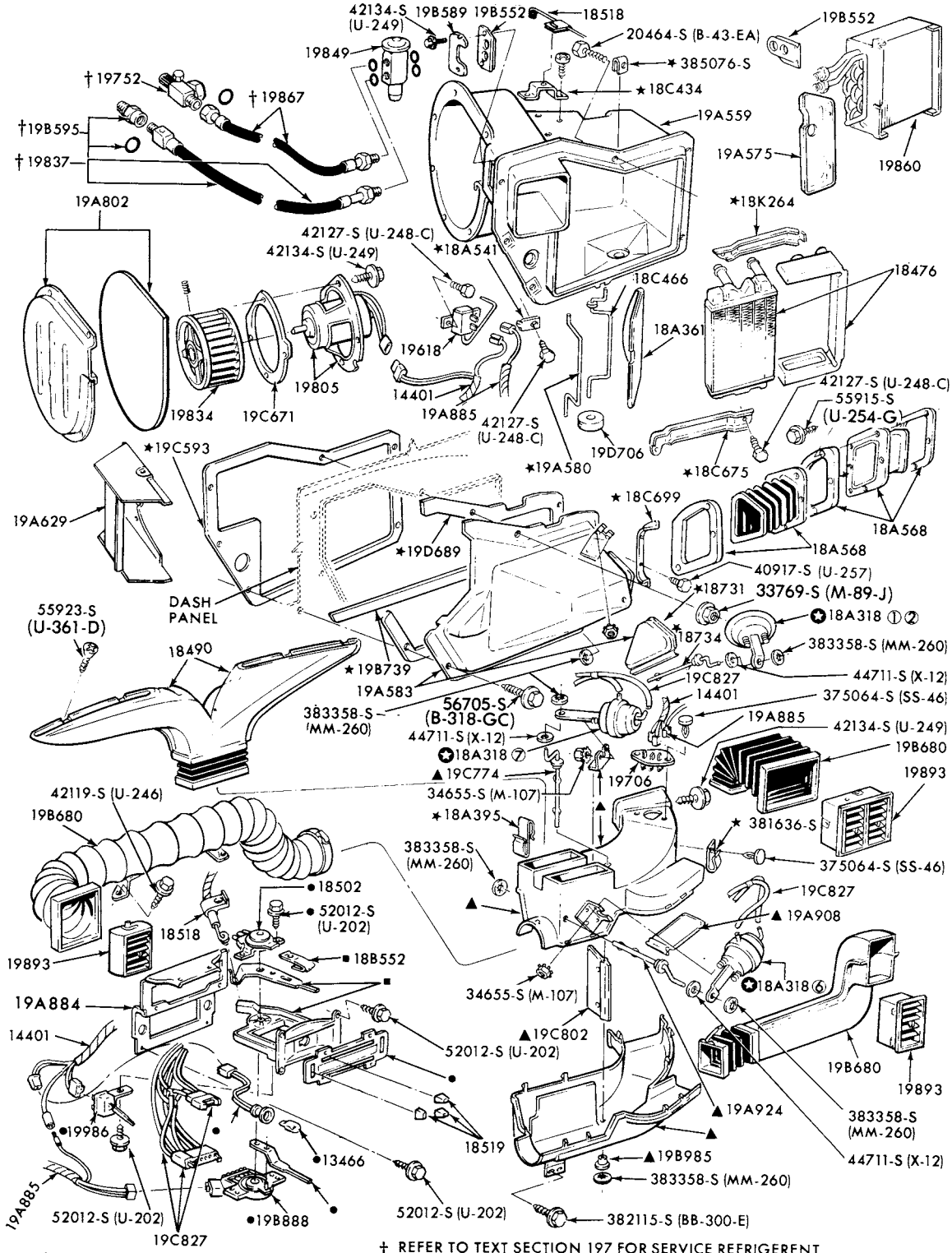

AIR CONDITIONER PARTS (PASSENGER COMPARTMENT)
1973/75 F100/350--INTEGRAL A/C

COPYRIGHT © 1979 -FORD MOTOR-DEARBORN, MICHIGAN COMPANY

1973/79 TRUCK SERIES 100/500

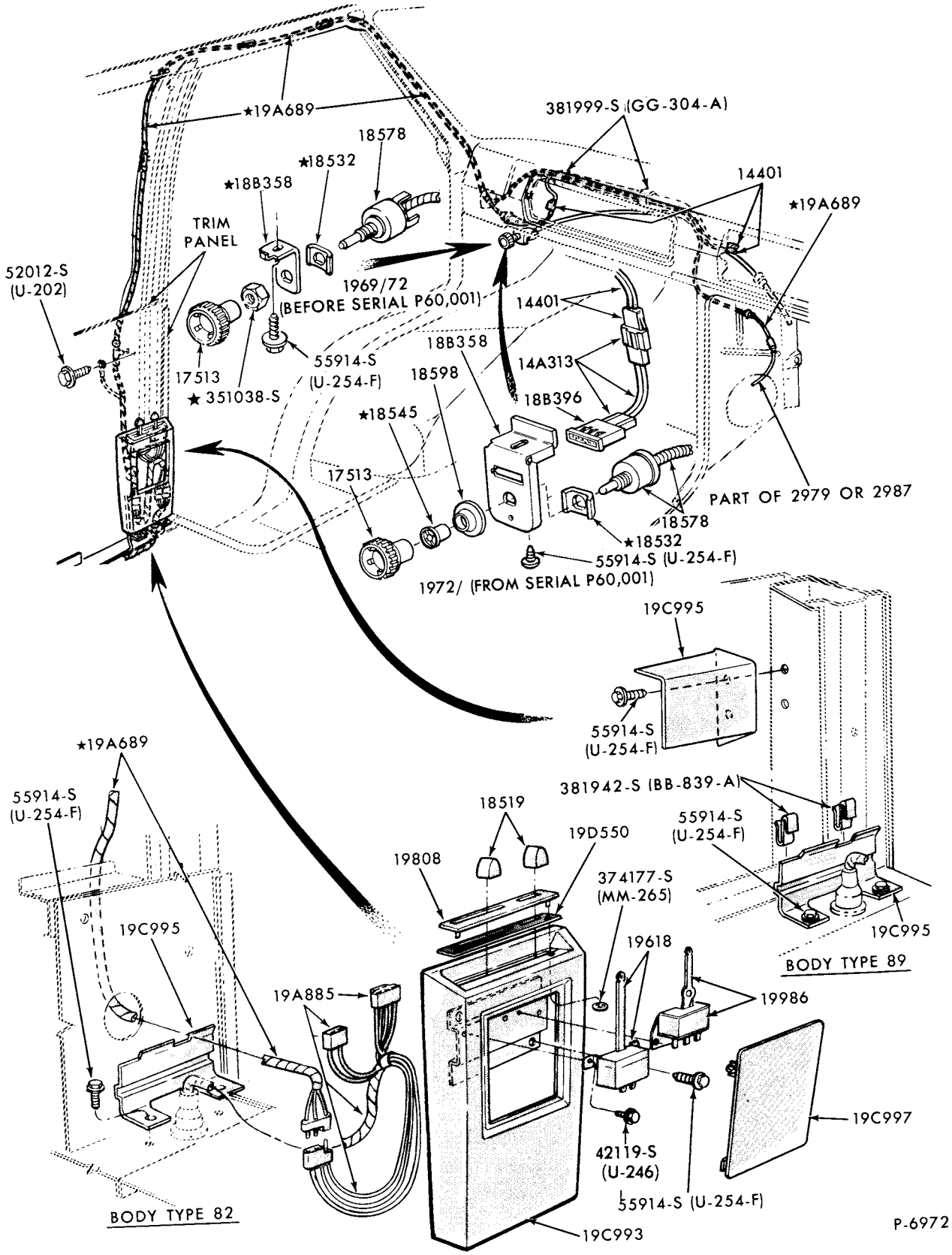

AIR CONDITIONER CONTROLS and WIRING
1973/74 E100/300--INTEGRAL A/C

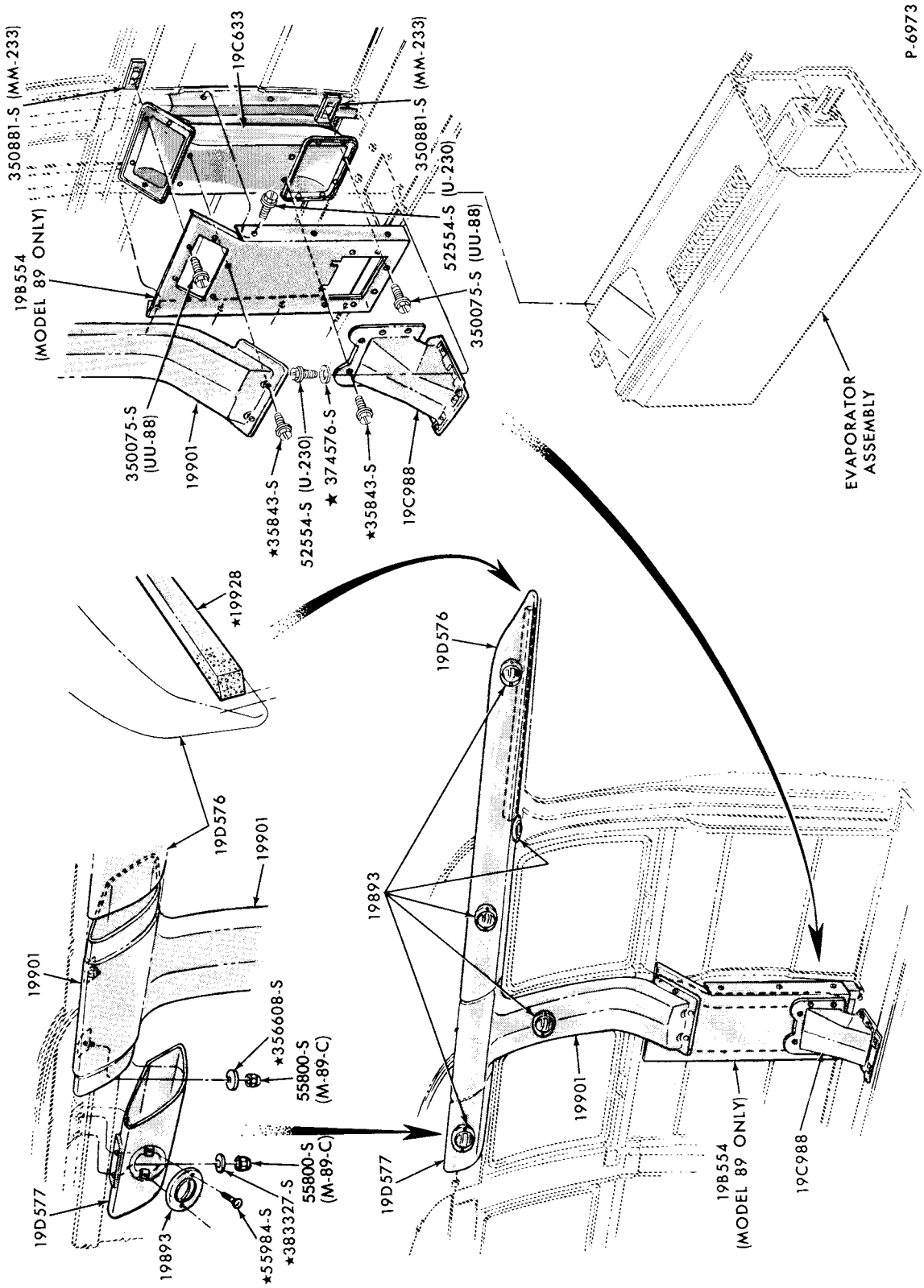

AIR CONDITIONER DUCTS and REGISTERS
1973/74 E100/300--INTEGRAL A/C

COPYRIGHT © 1979 — FORD MOTOR COMPANY — DEARBORN, MICHIGAN

1973/79 TRUCK SERIES 100/500

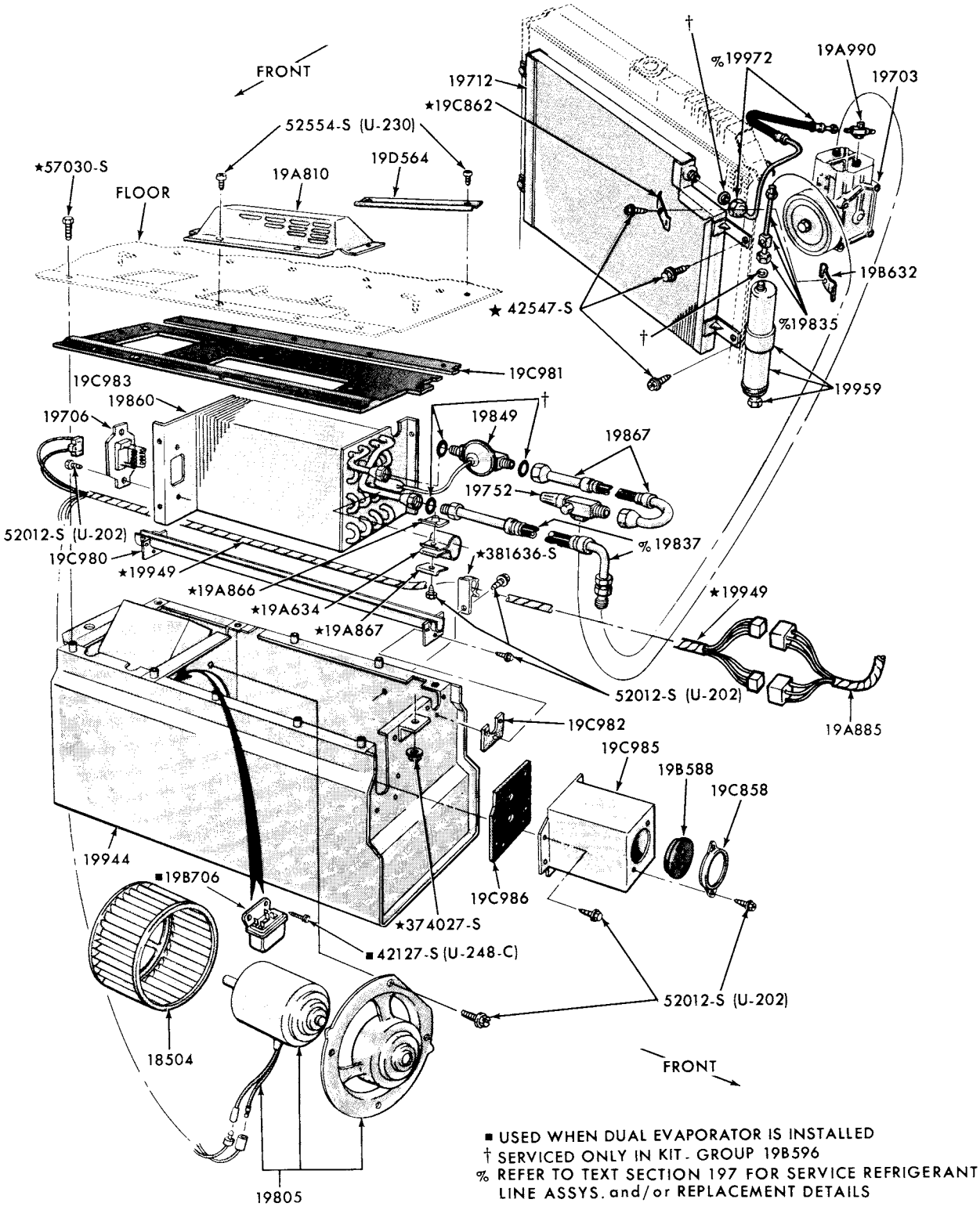

AIR CONDITIONER EVAPORATOR (MAIN) CONDENSER and DEHYDRATOR
1973/74 E100/300--INTEGRAL A/C

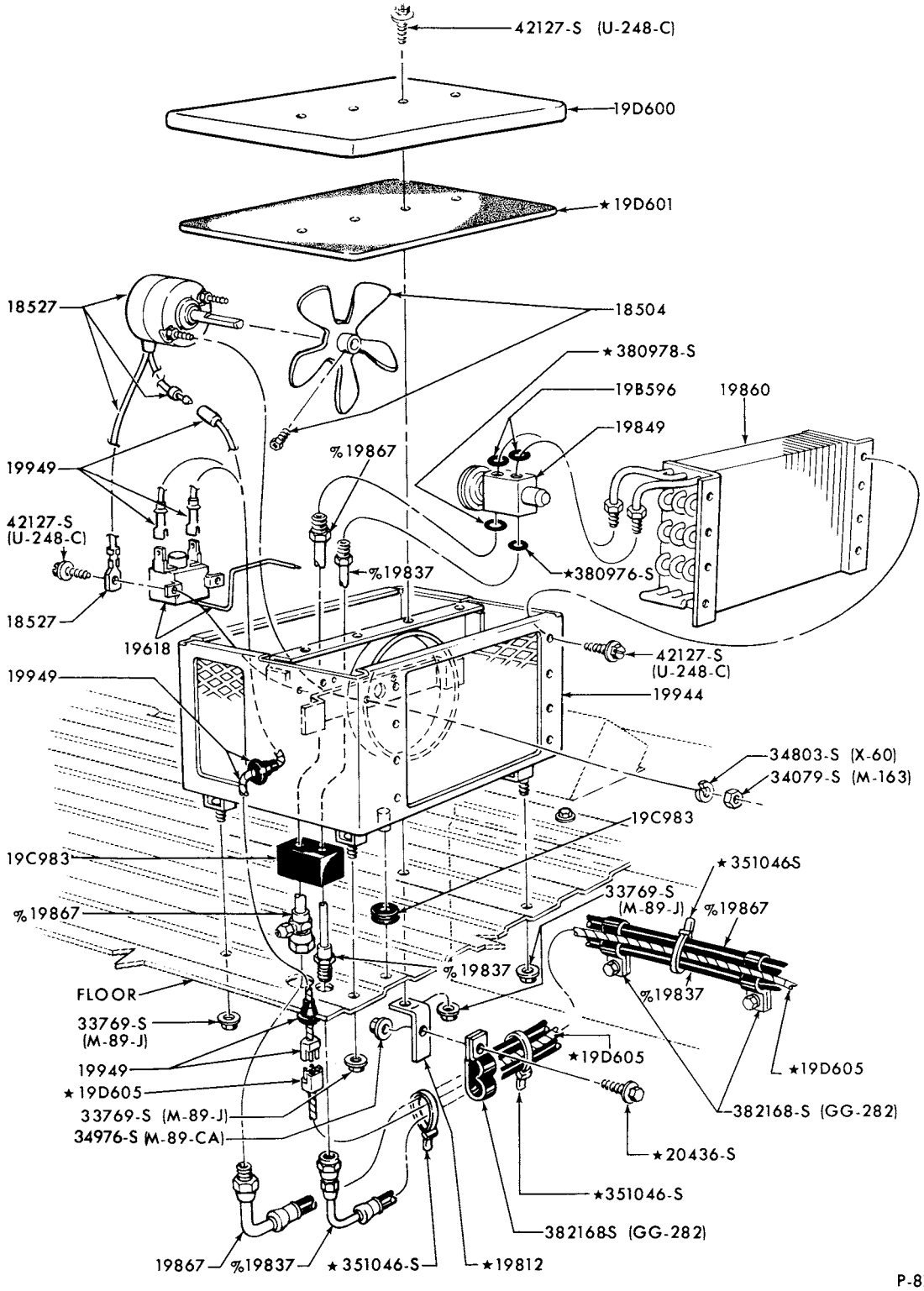

P-8736

%REFER TO TEXT SECTION 197 FOR SERVICE REFRIGERANT LINE ASSYS. and/or REPLACEMENT DETAILS

AIR CONDITIONER AUXILIARY EVAPORATOR PARTS
1973/74 E100/300--INTEGRAL A/C

COPYRIGHT © 1979 FORD MOTOR COMPANY—DEARBORN, MICHIGAN

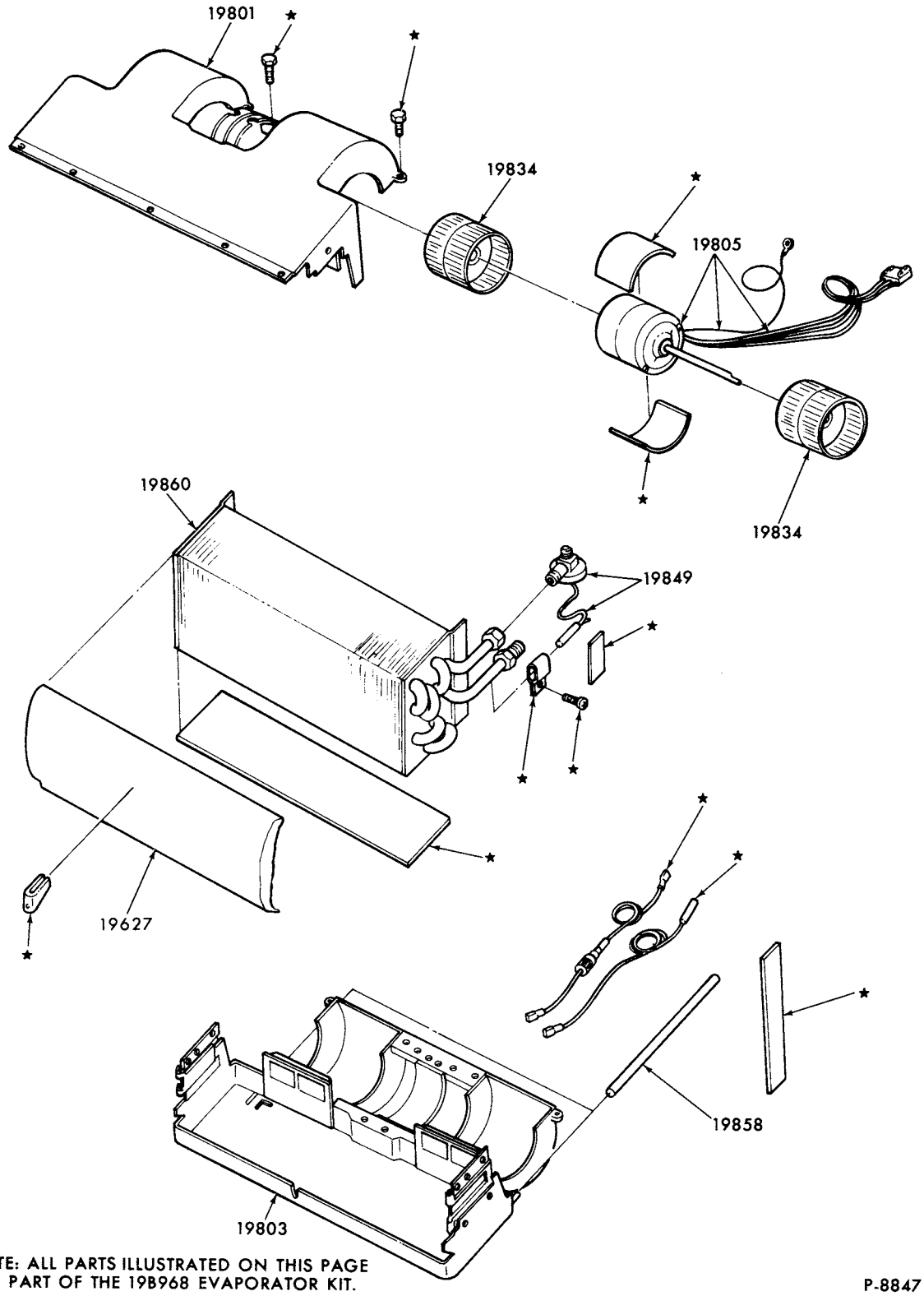

NOTE: ALL PARTS ILLUSTRATED ON THIS PAGE ARE PART OF THE 19B968 EVAPORATOR KIT.

P-8847

AIR CONDITIONER EVAPORATOR PARTS (PASSENGER COMPARTMENT)
BUILT-IN A/C (DEALER INSTALLED)
1973/74 E100/300 with HANG-ON GLOVE BOX
1973/ F100/250 with HANG-ON GLOVE BOX

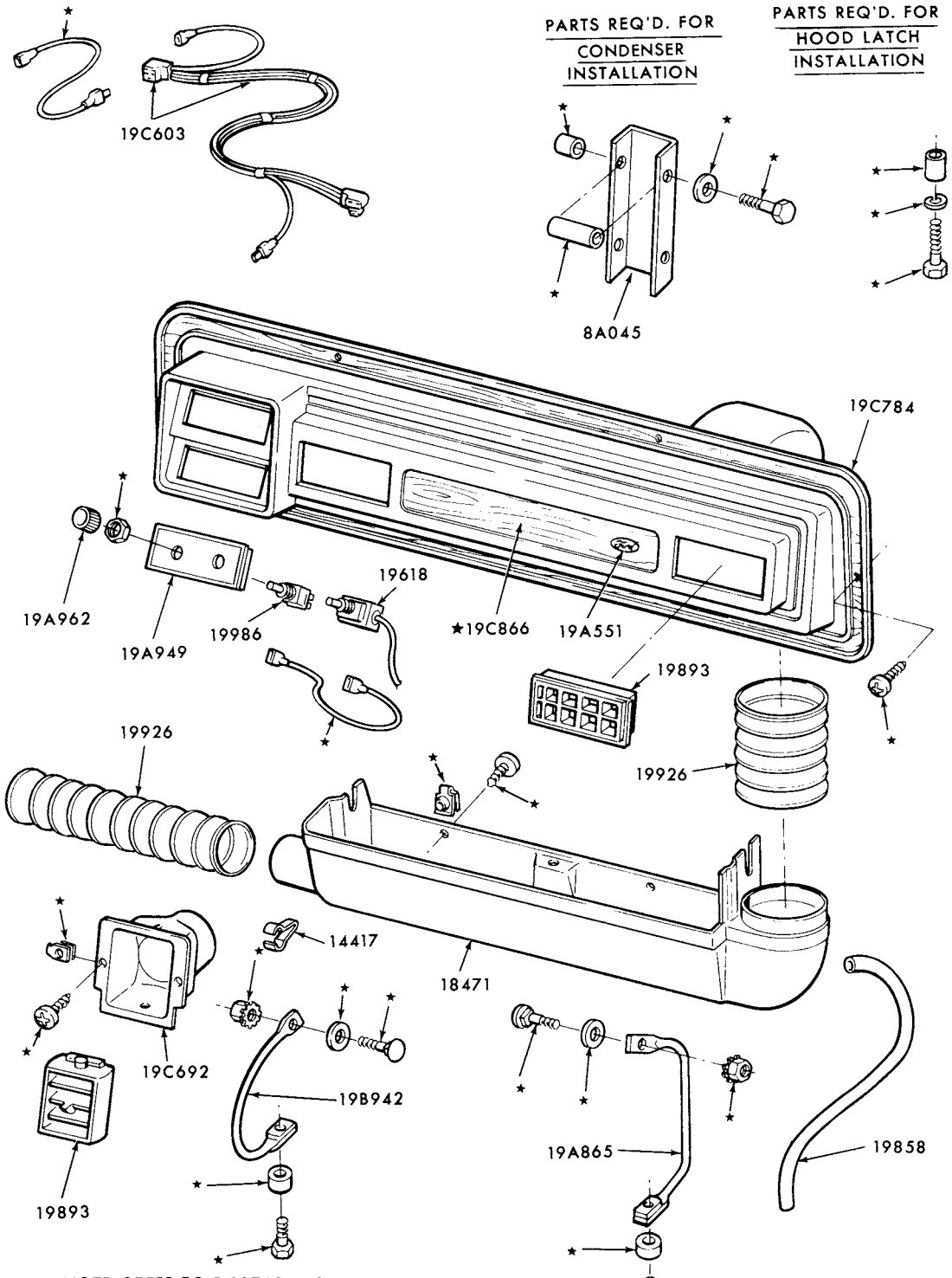

NOTE: REFER TO P-10768 IN SECTION 195 FOR AUXILIARY GLOVE COMPARTMENT INSTALLATION

NOTE: ALL PARTS ILLUSTRATED ON THIS PAGE ARE PART OF 19C872 BEZEL KIT

P-10577

AIR CONDITIONER BEZEL and CONTROLS (PASSENGER COMPARTMENT) - BUILT-IN A/C (DEALER INSTALLED)-w/HANG-ON GLOVE BOX
1973/ F100/250

COPYRIGHT © 1979 - FORD MOTOR - DEARBORN, MICHIGAN
COMPANY

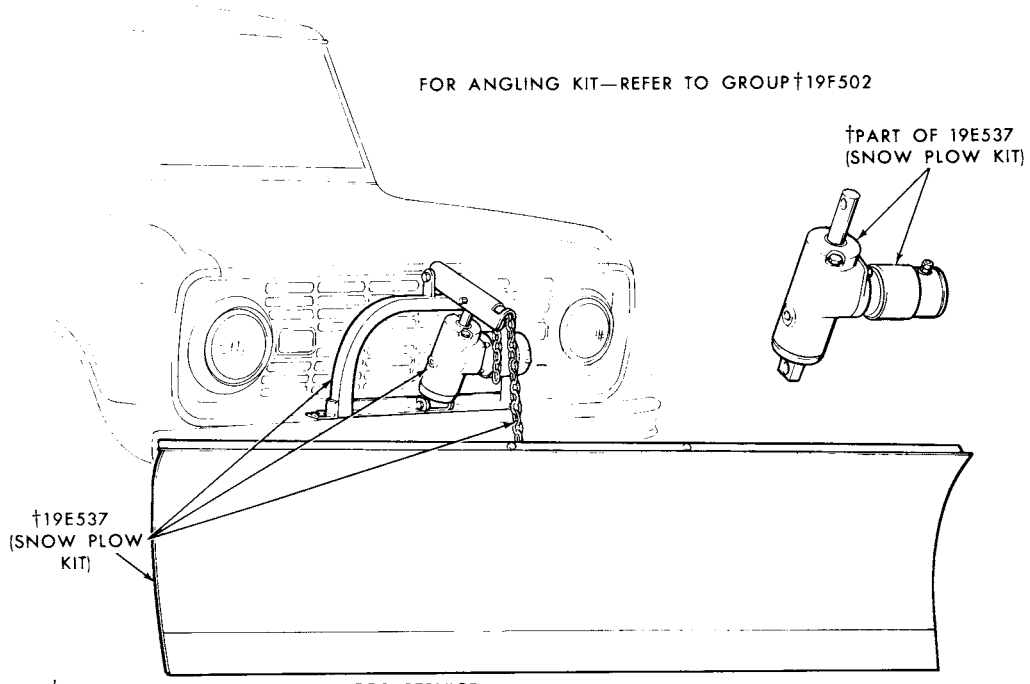

†DETAIL PARTS NOT SUPPLIED FOR SERVICE CONTACT MANUFACTURER FOR DETAILS

P-8366

SNOW PLOW and RELATED PARTS
1973/76 F100/250

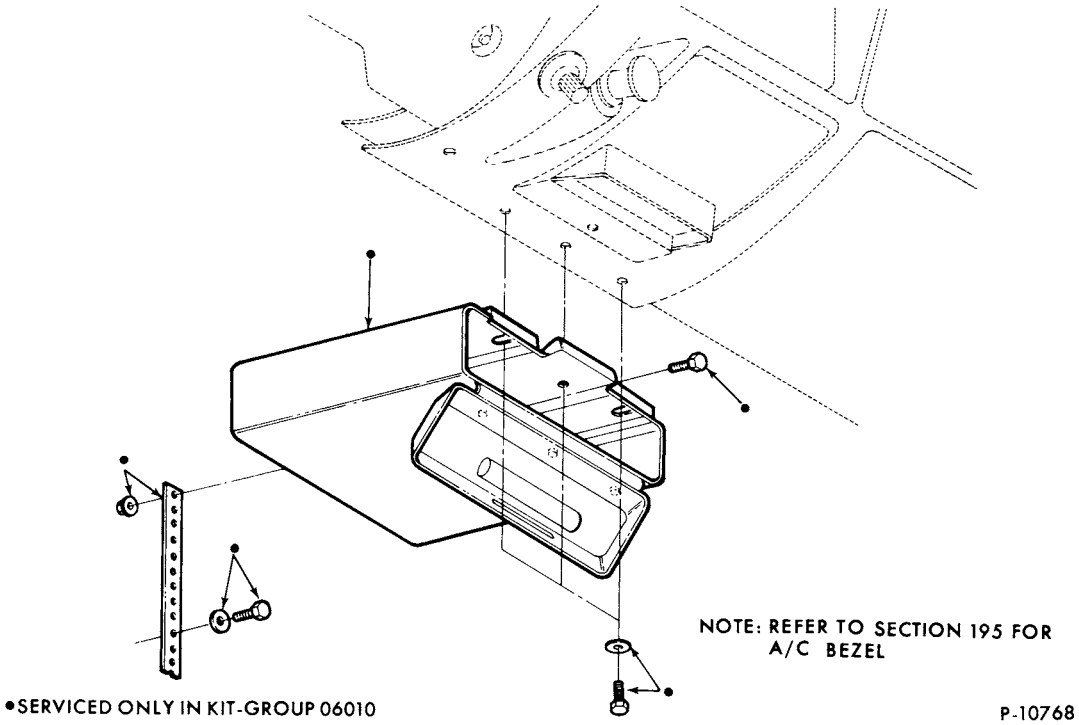

•SERVICED ONLY IN KIT-GROUP 06010

P-10768

AIR CONDITIONER GLOVE BOX PARTS
HANG-ON A/C (DEALER INSTALLED)
1973/ F100/250

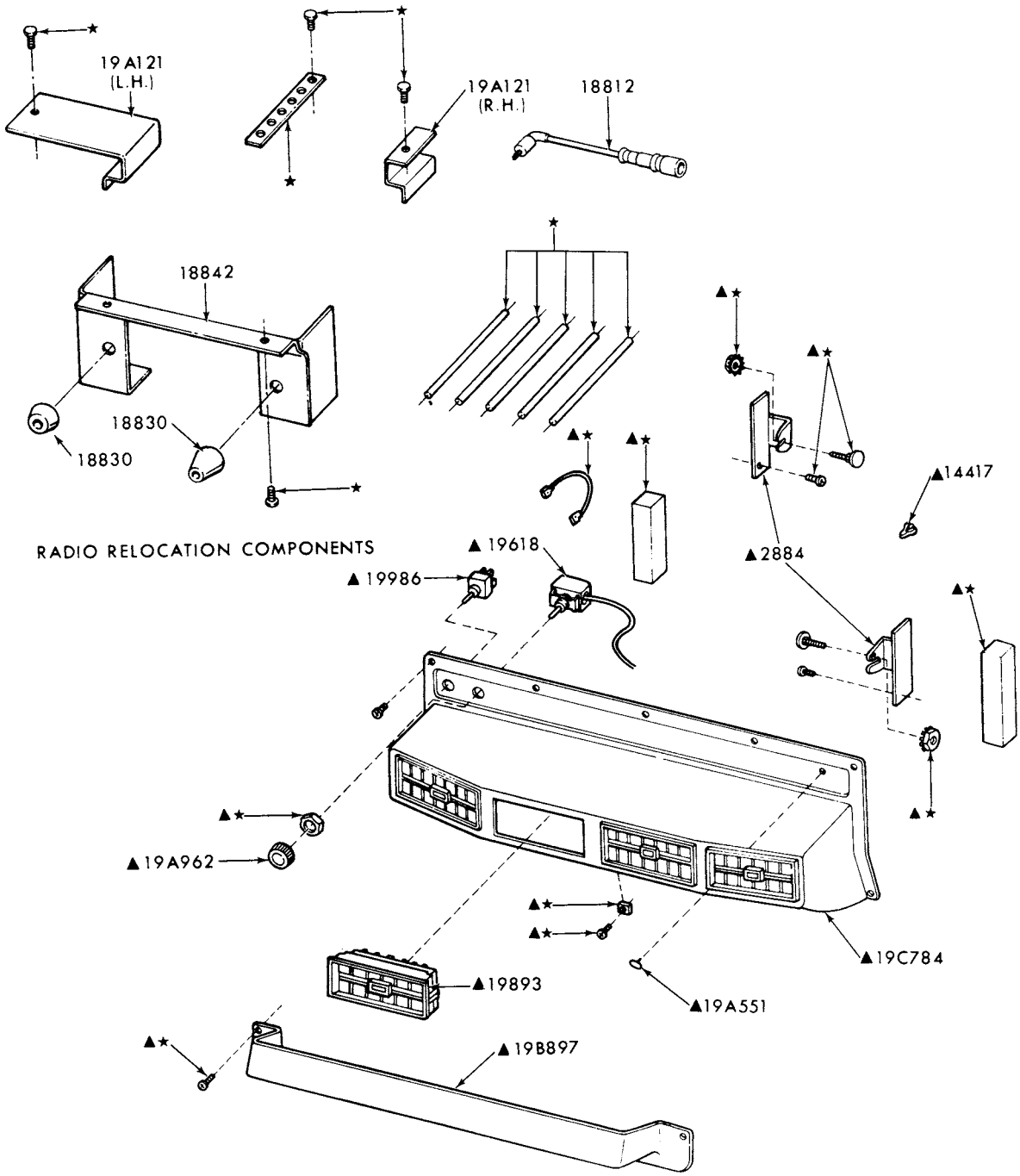

▲PART OF THE 19C872 BEZEL KIT

P-10356

AIR CONDITIONER BEZEL and CONTROLS (PASSENGER COMPARTMENT)-
BUILT-IN A/C (DEALER INSTALLED)
1973/74 E100/350

COPYRIGHT © 1979 - FORD MOTOR - DEARBORN, MICHIGAN COMPANY

1973/79 TRUCK SERIES 100/500

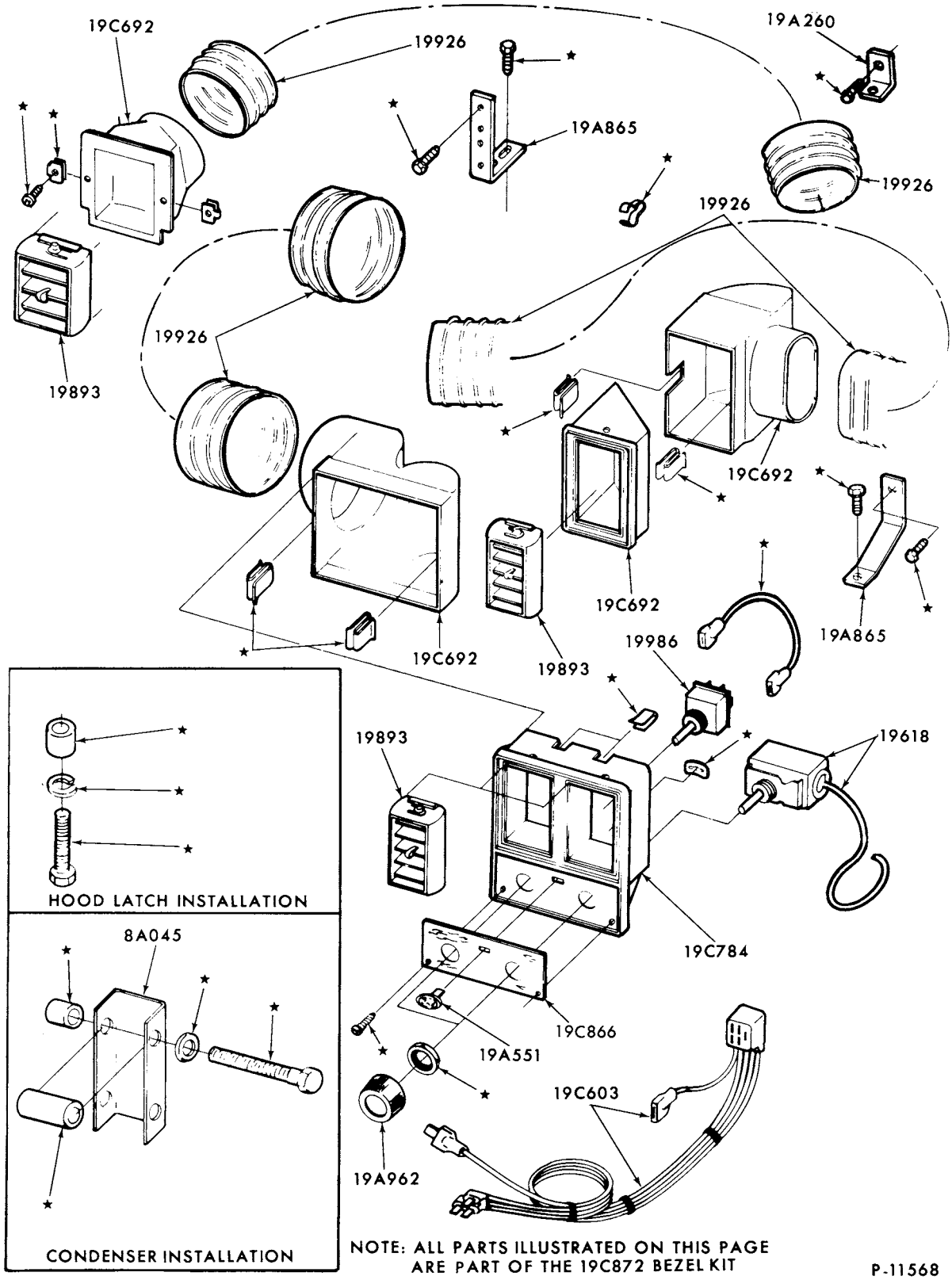

NOTE: ALL PARTS ILLUSTRATED ON THIS PAGE ARE PART OF THE 19C872 BEZEL KIT

P-11568

AIR CONDITIONER BEZEL and CONTROLS
BUILT-IN A/C (DEALER INSTALLED)-w/SINGLE BLOWER EVAPORATOR
1973/ F100/250

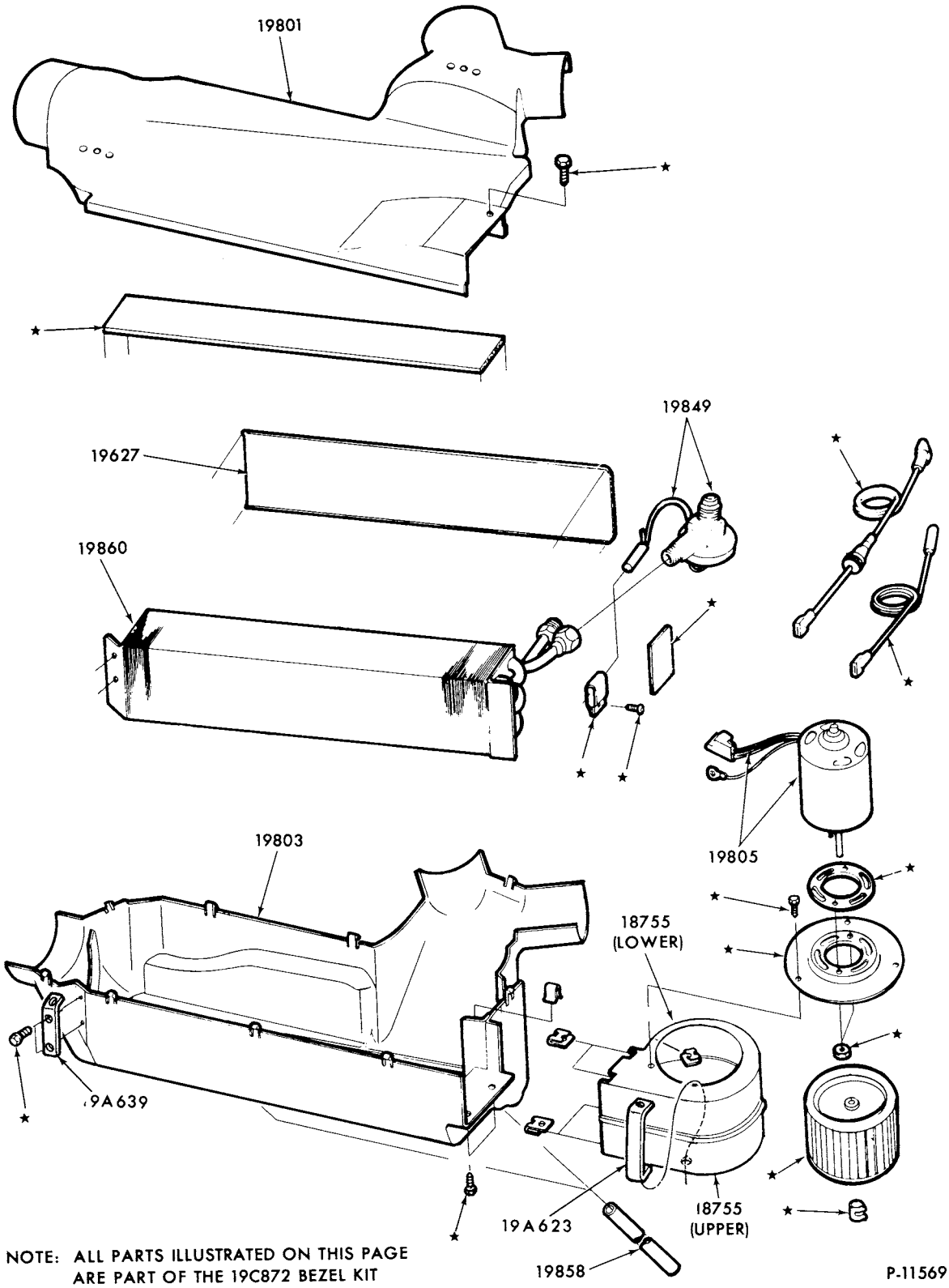

NOTE: ALL PARTS ILLUSTRATED ON THIS PAGE ARE PART OF THE 19C872 BEZEL KIT

AIR CONDITIONER EVAPORATOR PARTS
BUILT-IN A/C (DEALER INSTALLED) -w/SINGLE BLOWER EVAPORATOR
1973/ F100/250

COPYRIGHT © 1979-FORD MOTOR-DEARBORN, MICHIGAN COMPANY

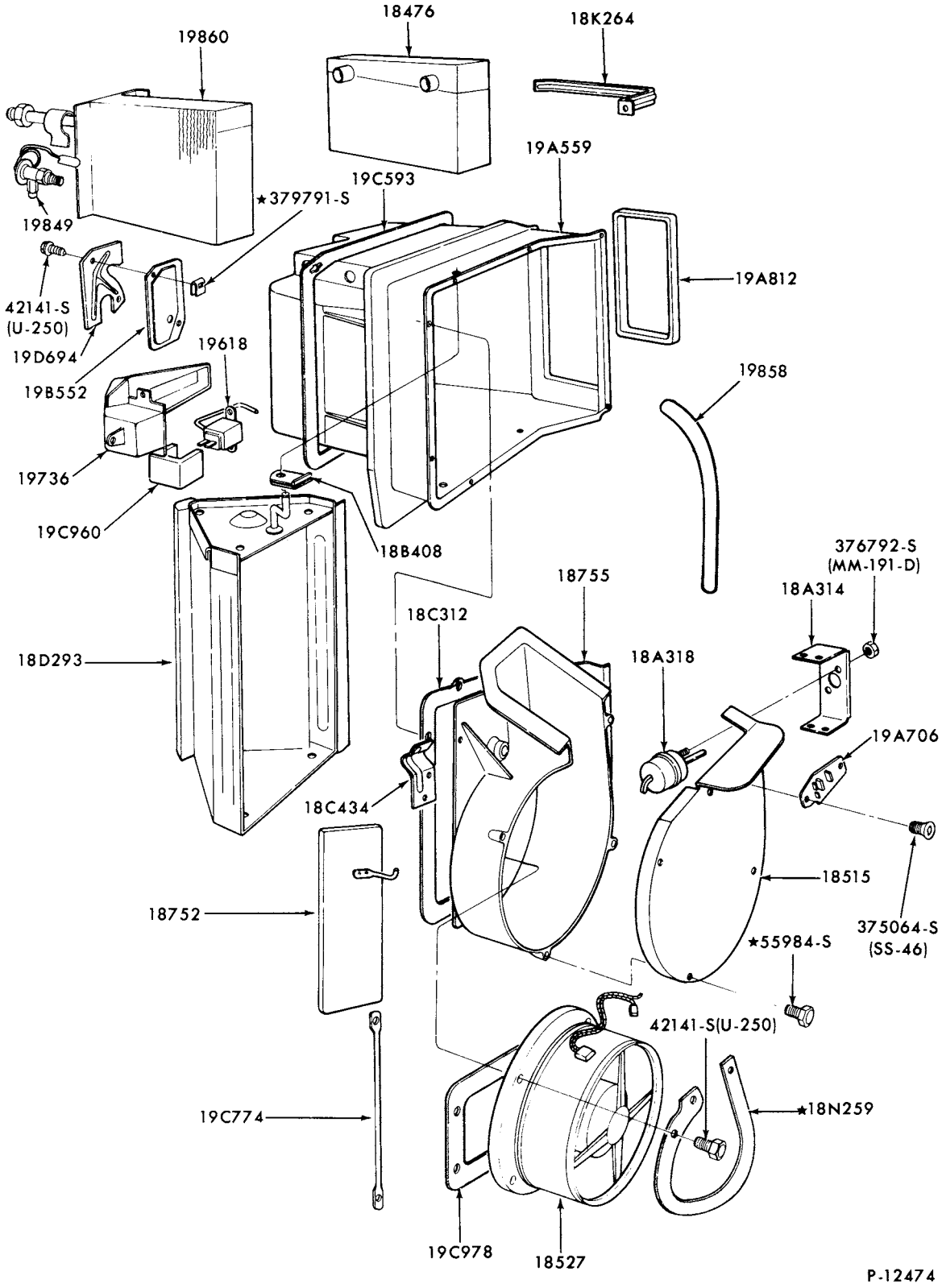

AIR CONDITIONER EVAPORATOR (MAIN)
1975/ E100/350--with INTEGRAL A/C

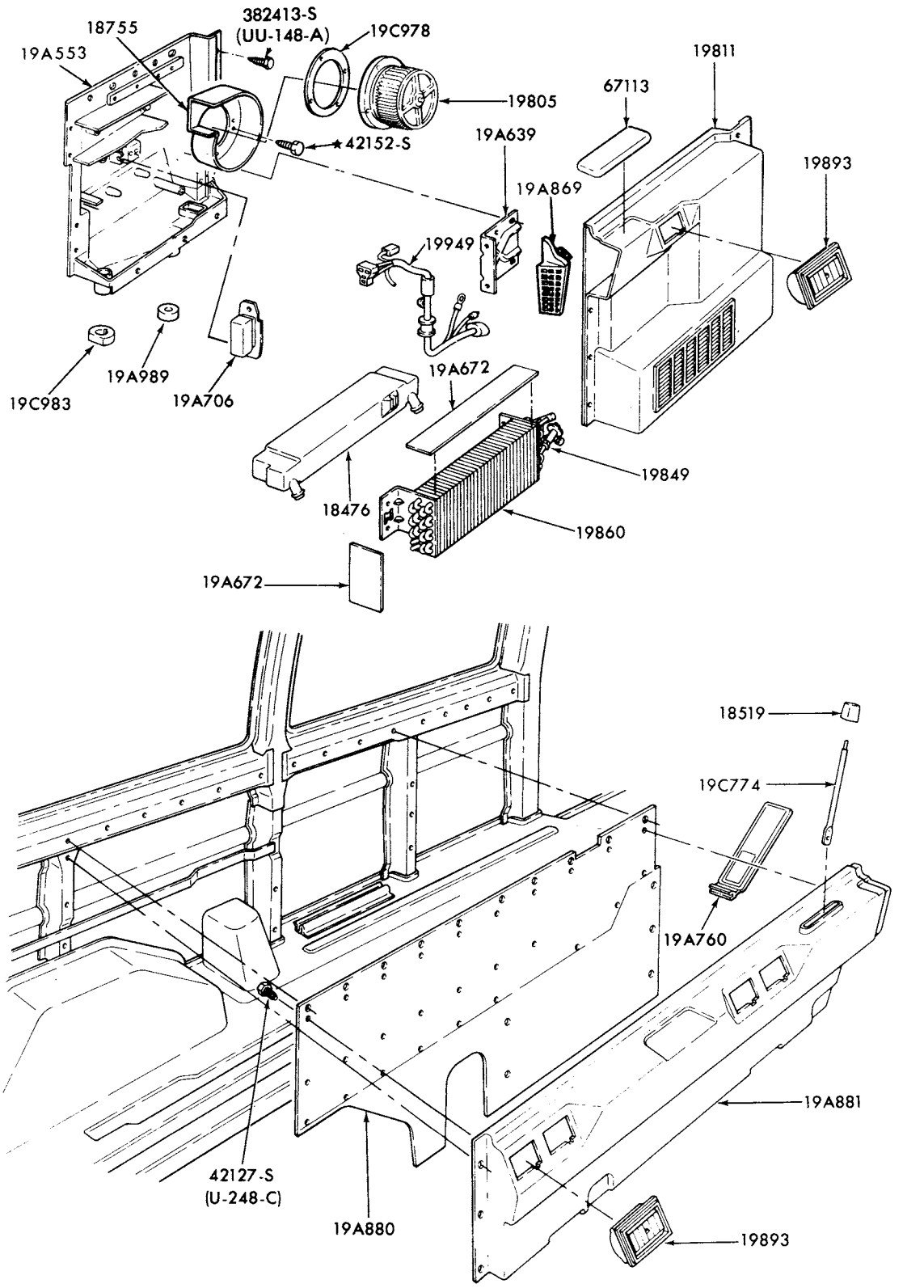

AIR CONDITIONER (AUXILIARY)
1975/ E100/350--with INTEGRAL A/C

COPYRIGHT © 1980 FORD MOTOR-DEARBORN, MICHIGAN COMPANY

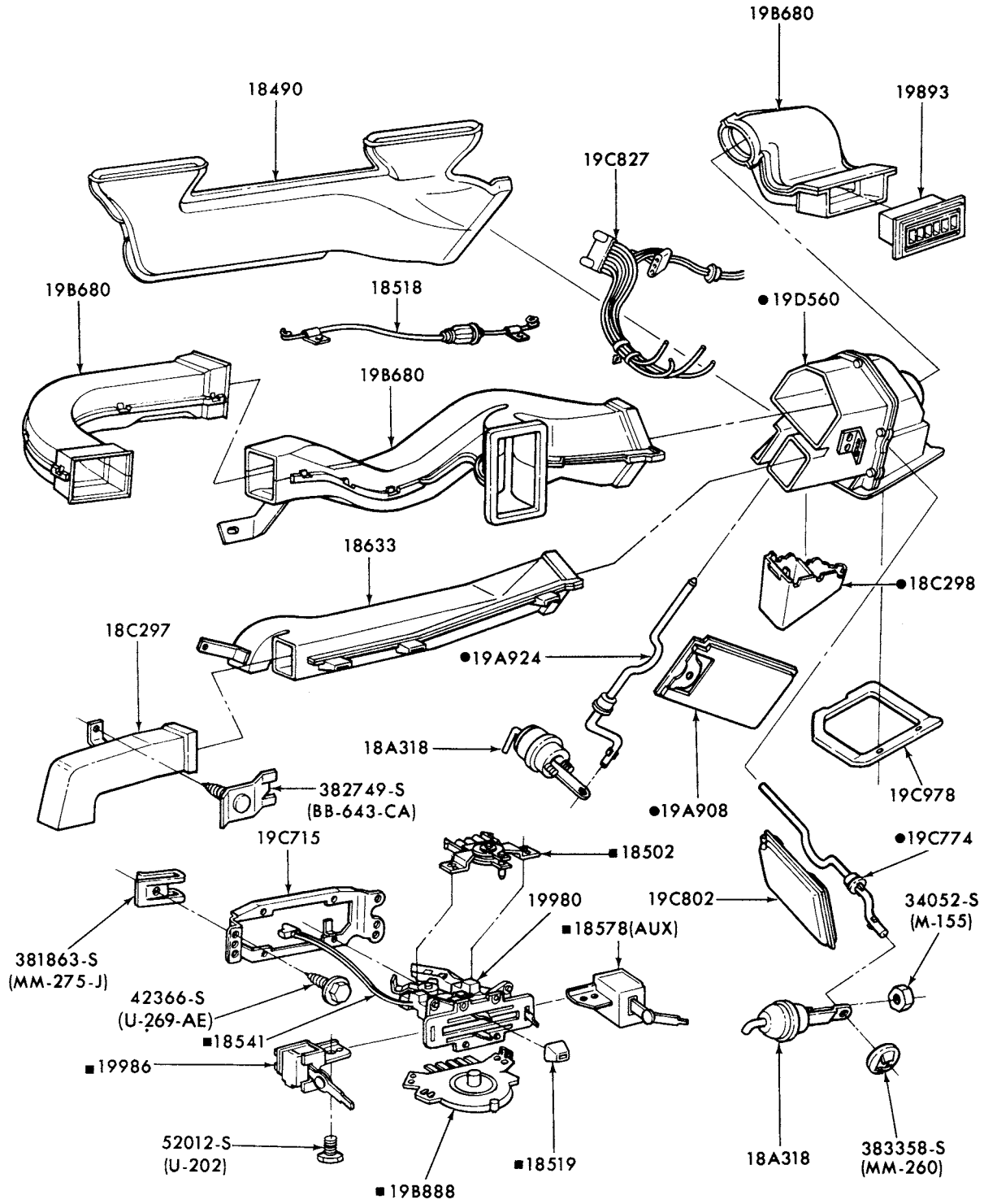

■ ALSO SERVICED IN ASSY-GROUP 19980
● SERVICED ONLY IN 18471 ASSY.

P-12475

AIR CONDITIONER DUCTS and CONTROLS (MAIN)
1975/ E100/350--with INTEGRAL A/C

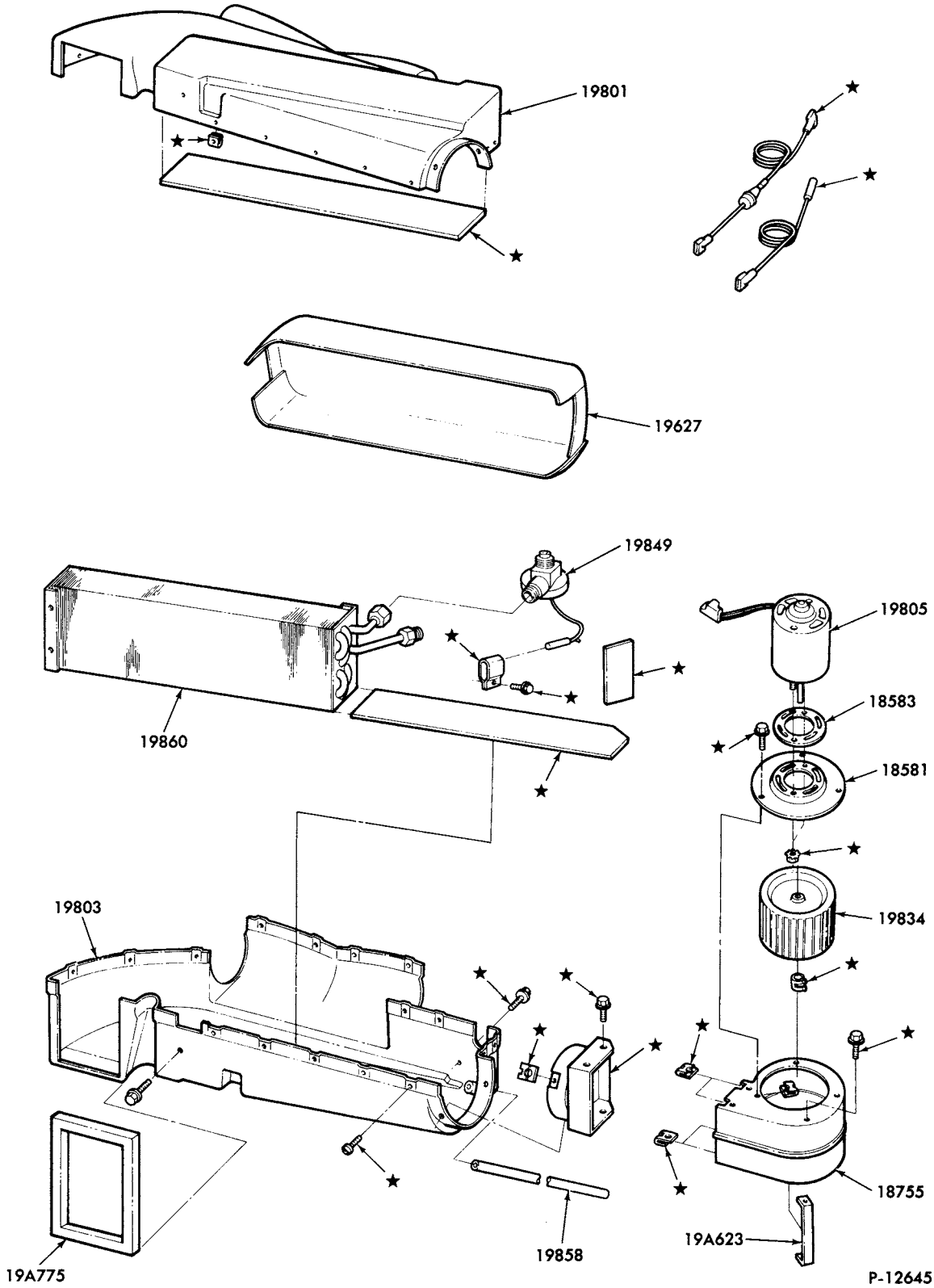

AIR CONDITIONER EVAPORATOR PARTS
BUILT-IN A/C (DEALER INSTALLED)
1975/ E100/350

COPYRIGHT © 1979 -FORD MOTOR-DEARBORN, MICHIGAN COMPANY

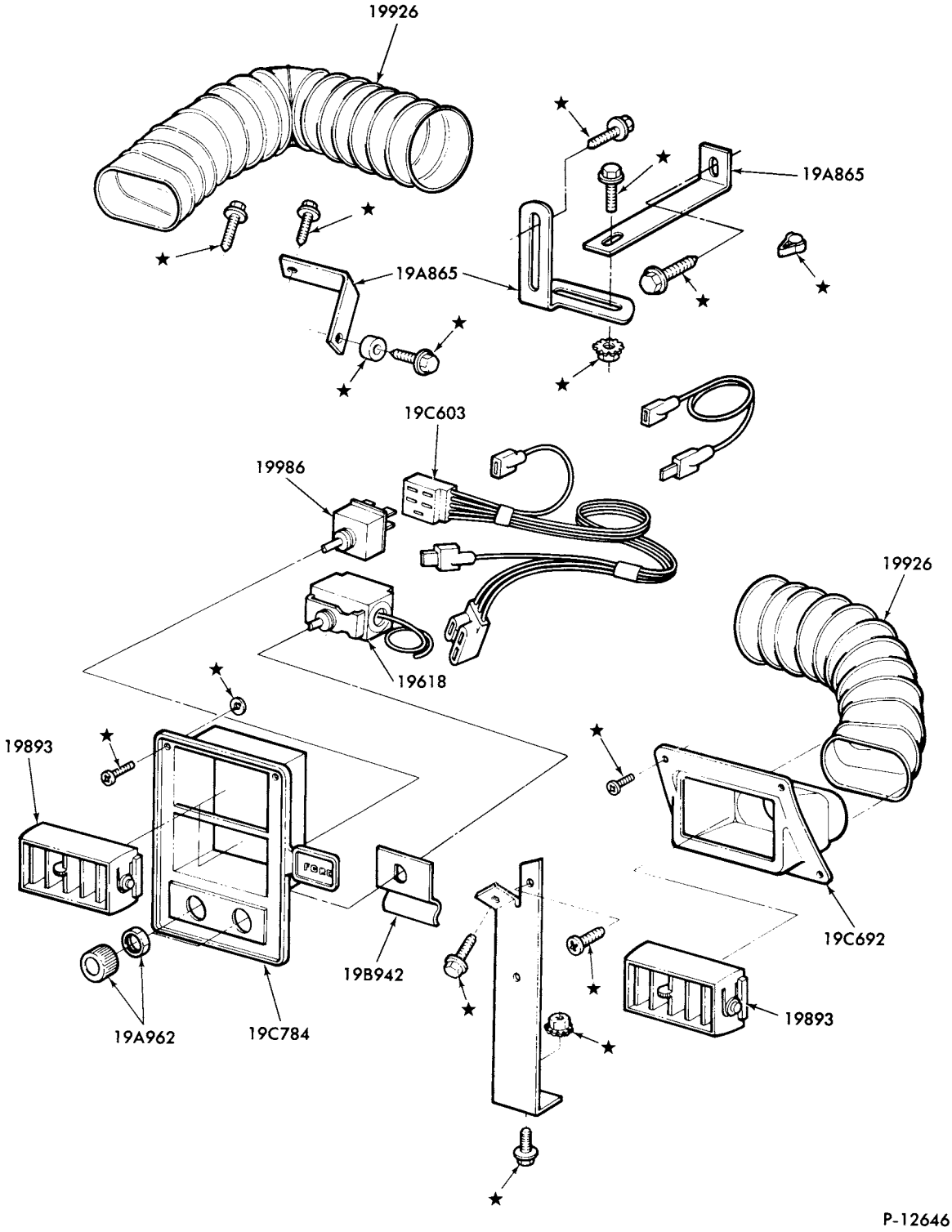

AIR CONDITIONER BEZEL and CONTROLS
BUILT-IN A/C (DEALER INSTALLED)
1975/ E100/350

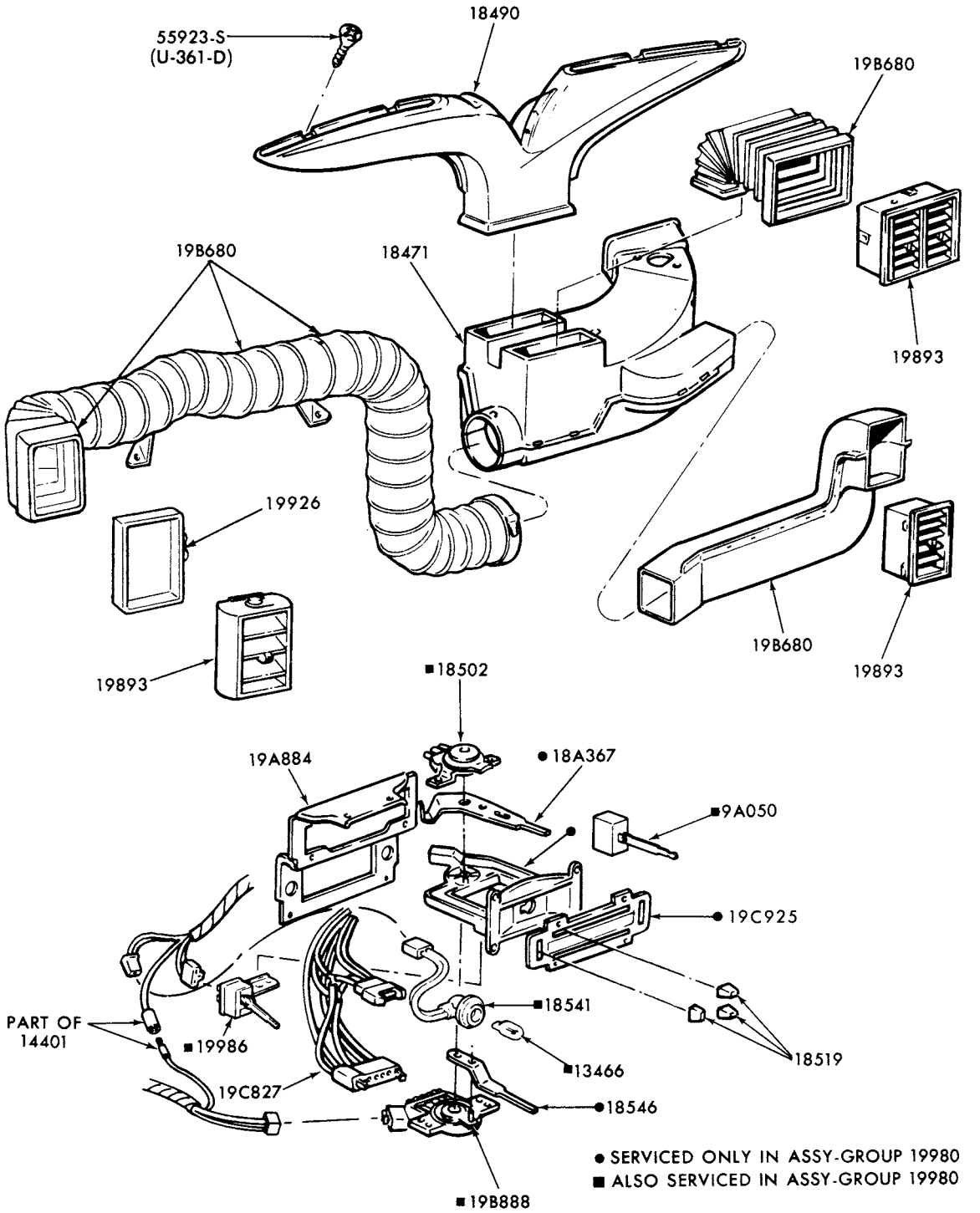

AIR CONDITIONER BEZEL and CONTROLS
1976/ F100/350--INTEGRAL A/C

COPYRIGHT © 1980 FORD MOTOR COMPANY-DEARBORN, MICHIGAN

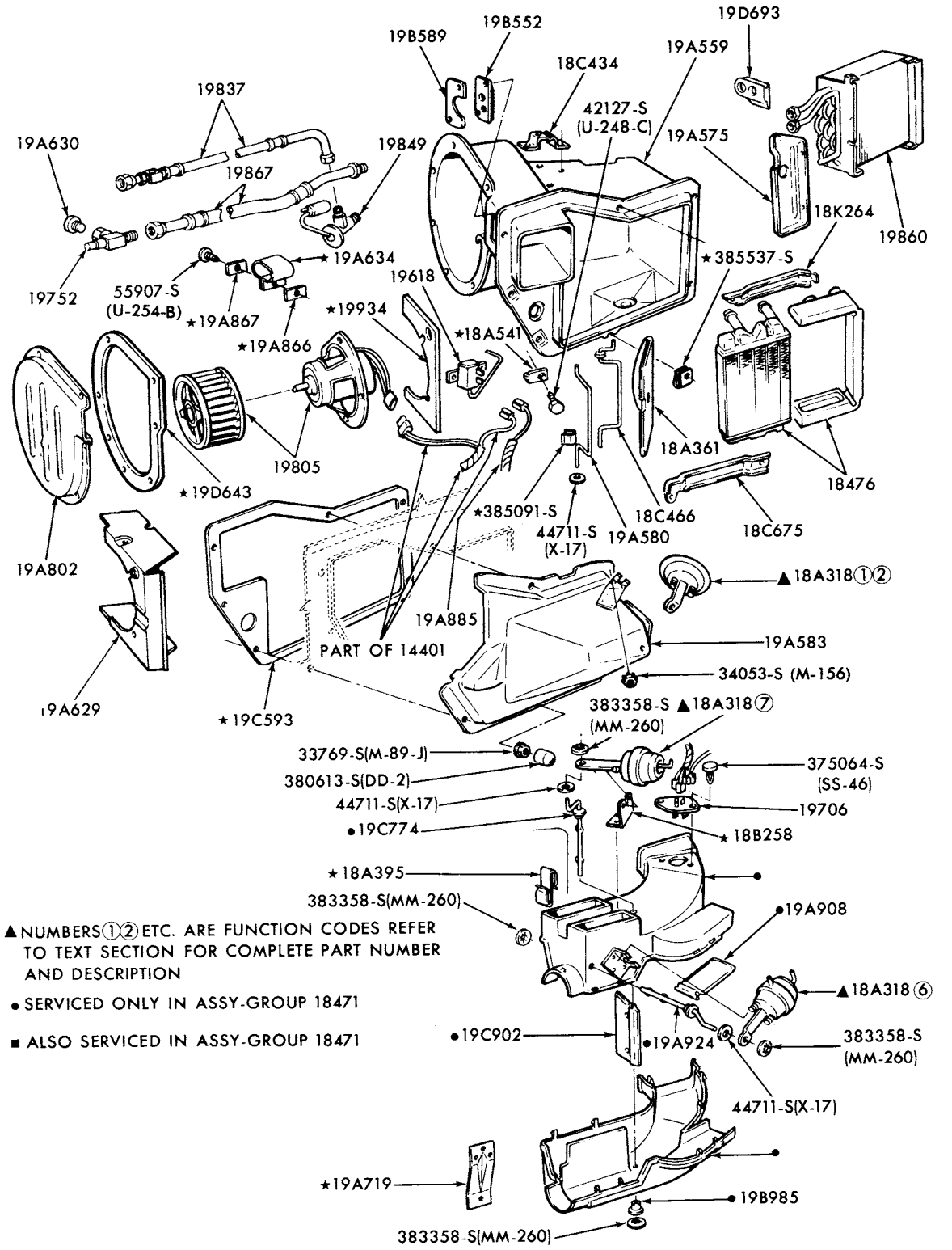

▲ NUMBERS①② ETC. ARE FUNCTION CODES REFER TO TEXT SECTION FOR COMPLETE PART NUMBER AND DESCRIPTION

• SERVICED ONLY IN ASSY-GROUP 18471

■ ALSO SERVICED IN ASSY-GROUP 18471

AIR CONDITIONER PASSENGER COMPARTMENT
1976/ F100/350--INTEGRAL A/C

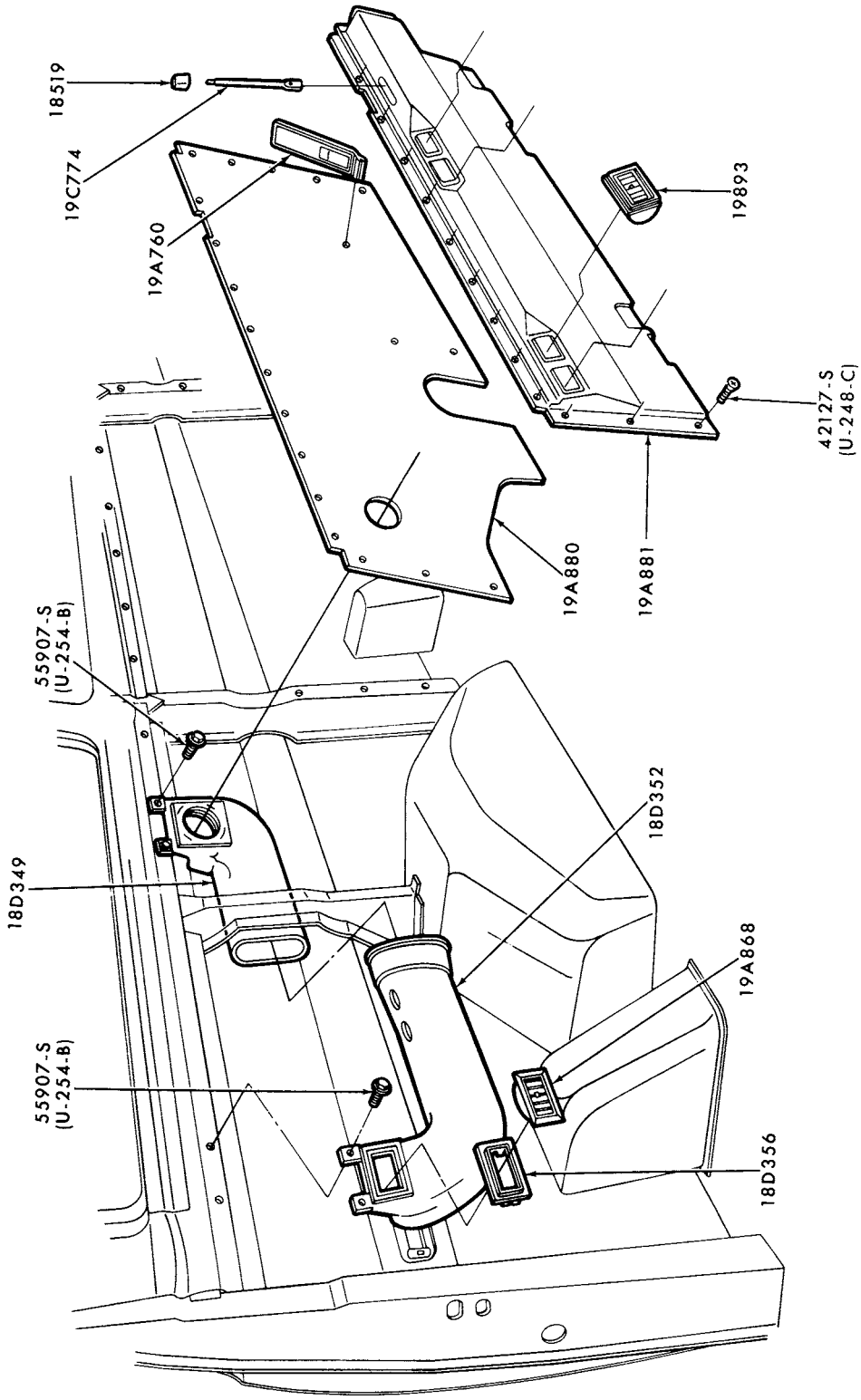

AIR CONDITIONER
DUCTS and REGISTER - (SUPER/VAN WAGON)
1978/ E150/350

COPYRIGHT © 1980— FORD MOTOR COMPANY —DEARBORN, MICHIGAN

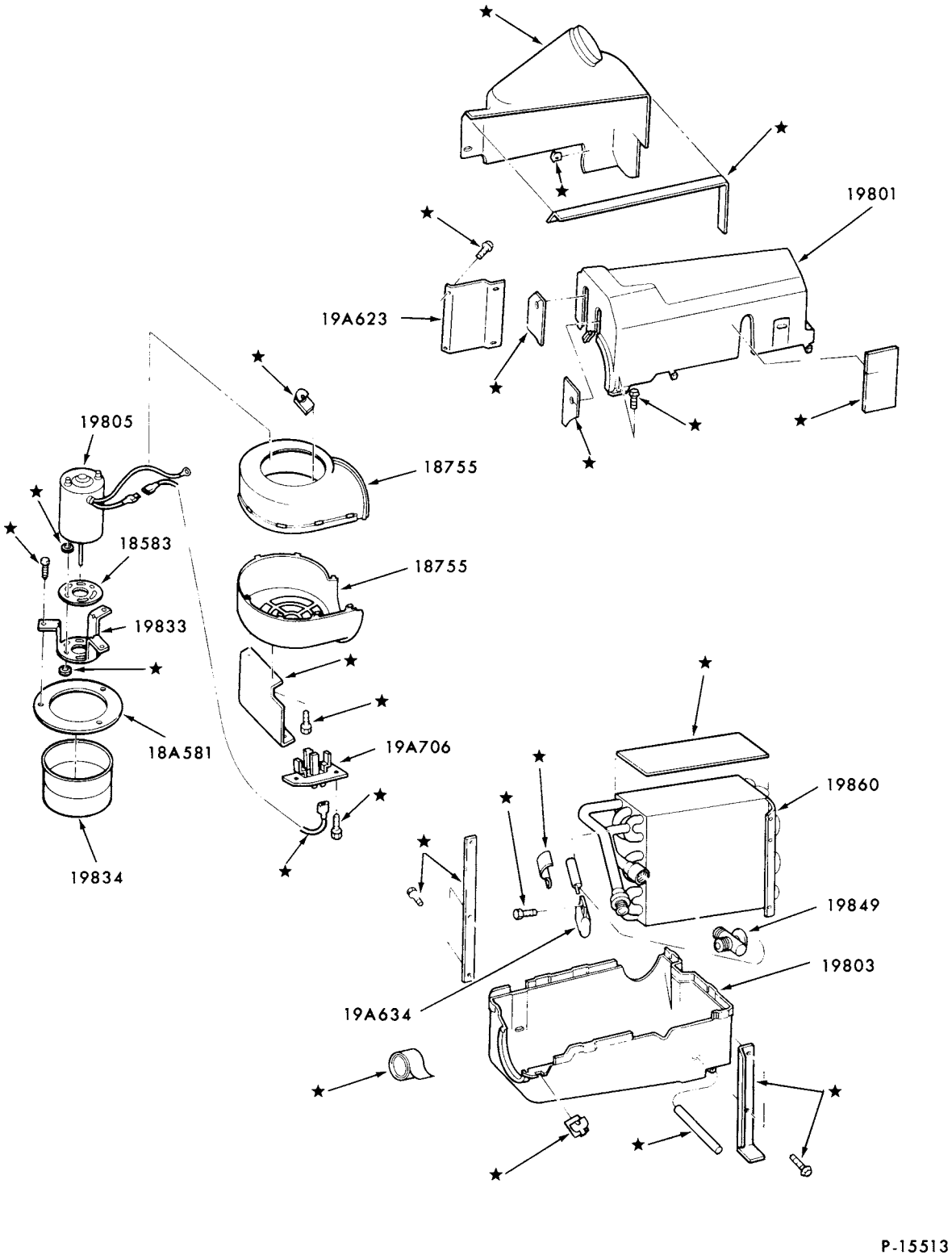

AIR CONDITIONER EVAPORATOR PARTS BUILT-IN A/C (DEALER INSTALLED)
1979 E100/350--AUXILIARY A/C

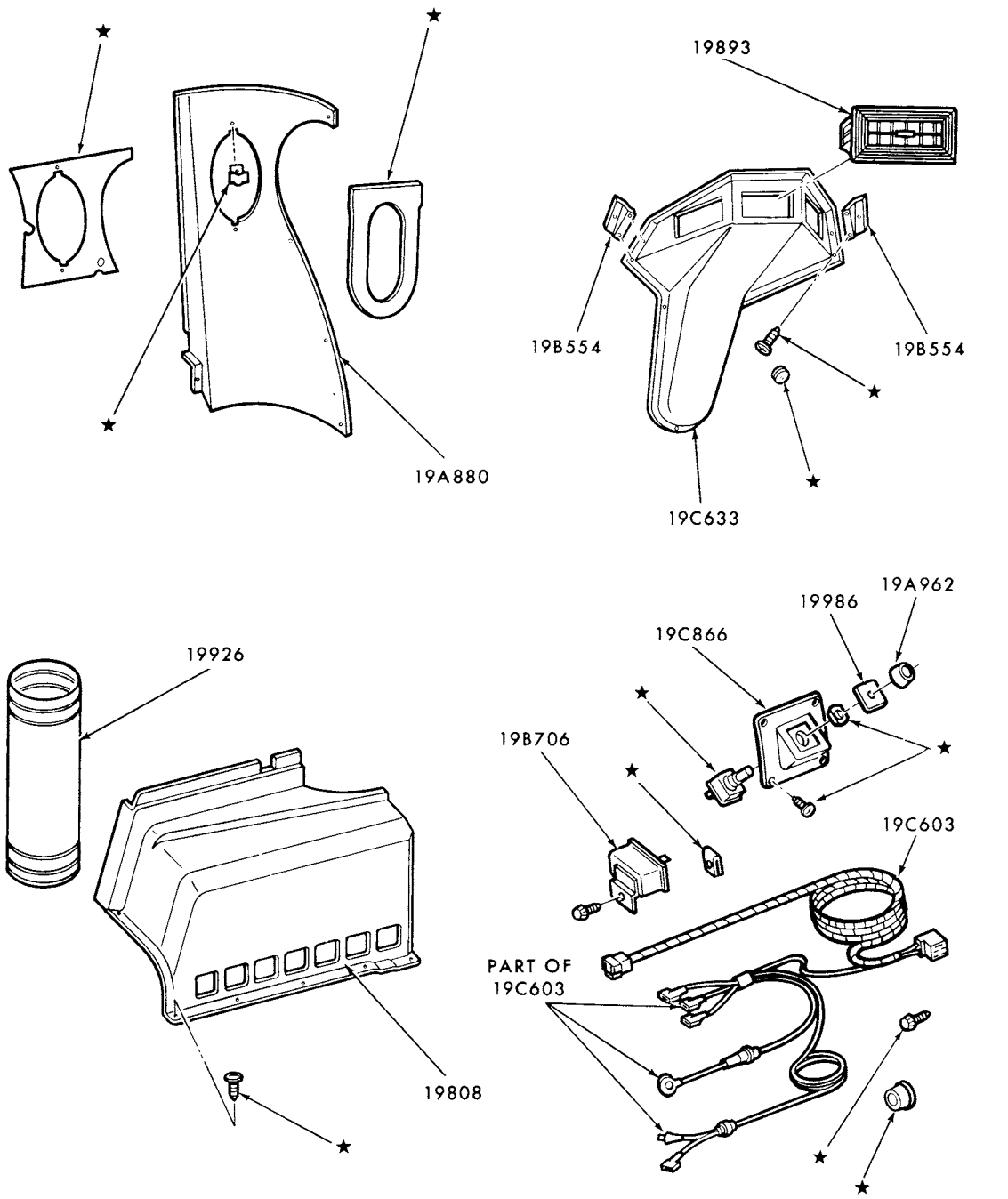

AIR CONDITIONER BEZEL and CONTROLS BUILT-IN A/C (DEALER INSTALLED)
1979 E100/350--AUXILIARY A/C

COPYRIGHT © 1980 FORD MOTOR-DEARBORN, MICHIGAN COMPANY

1973/79 TRUCK SERIES 100/500

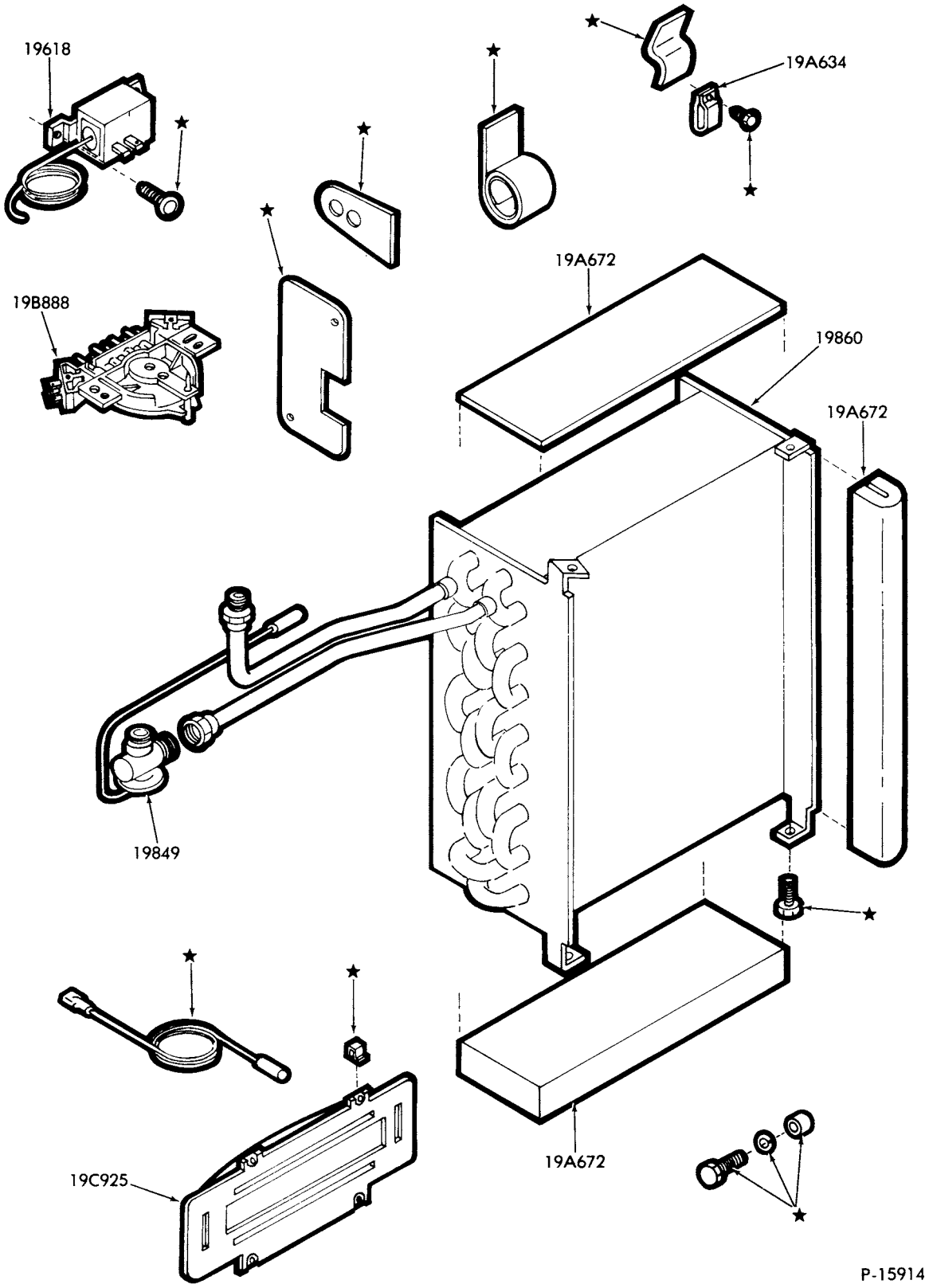

AIR CONDITIONER EVAPORATOR PARTS BUILT-IN A/C (DEALER INSTALLED)
1979 F100/350

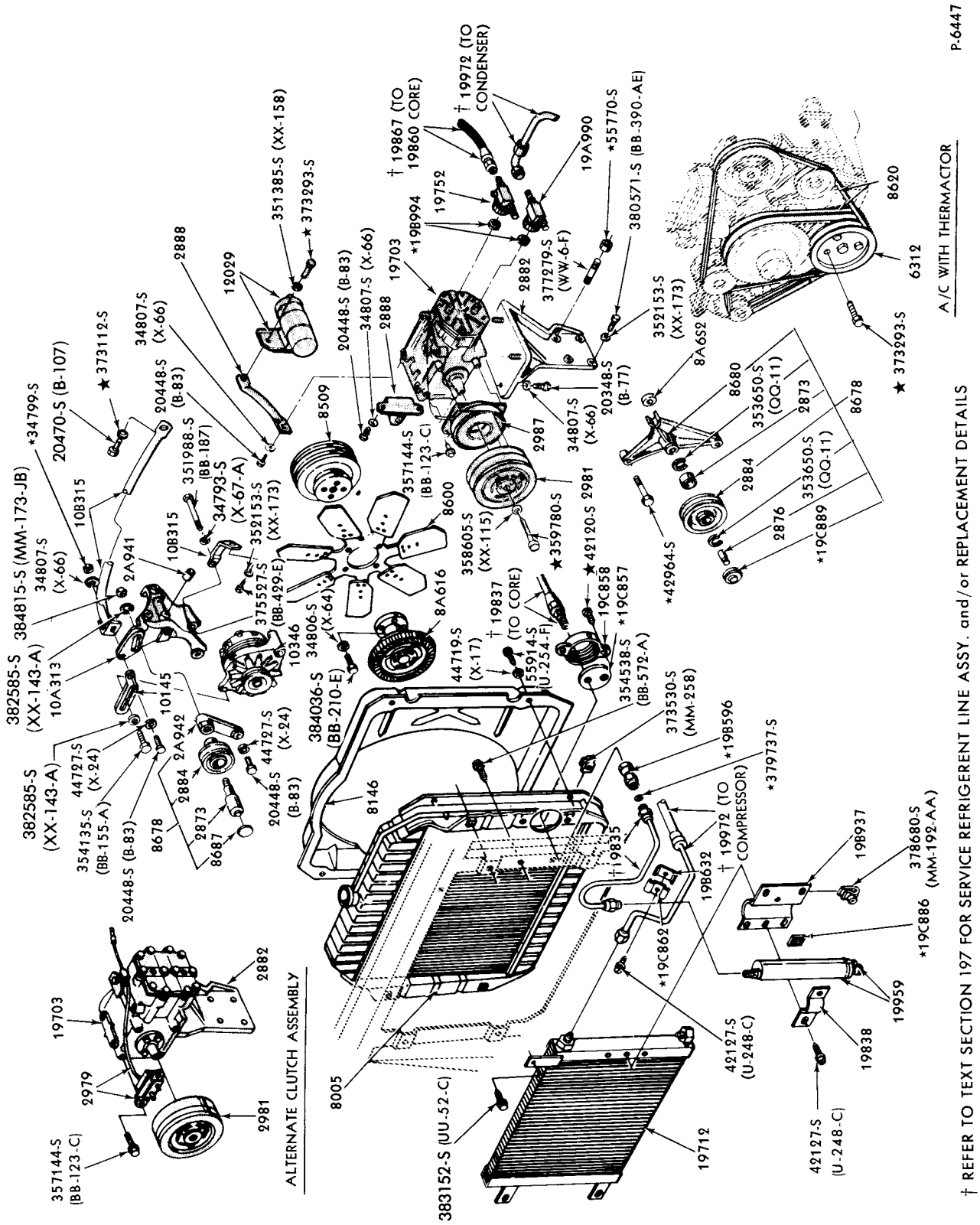

AIR CONDITIONER PARTS-ENGINE COMPARTMENT

1973/74 F100/350--6 CYL. 240, 300 and INTEGRAL A/C

COPYRIGHT © 1979 - FORD MOTOR - DEARBORN, MICHIGAN
COMPANY

1973/79 TRUCK SERIES 100/500

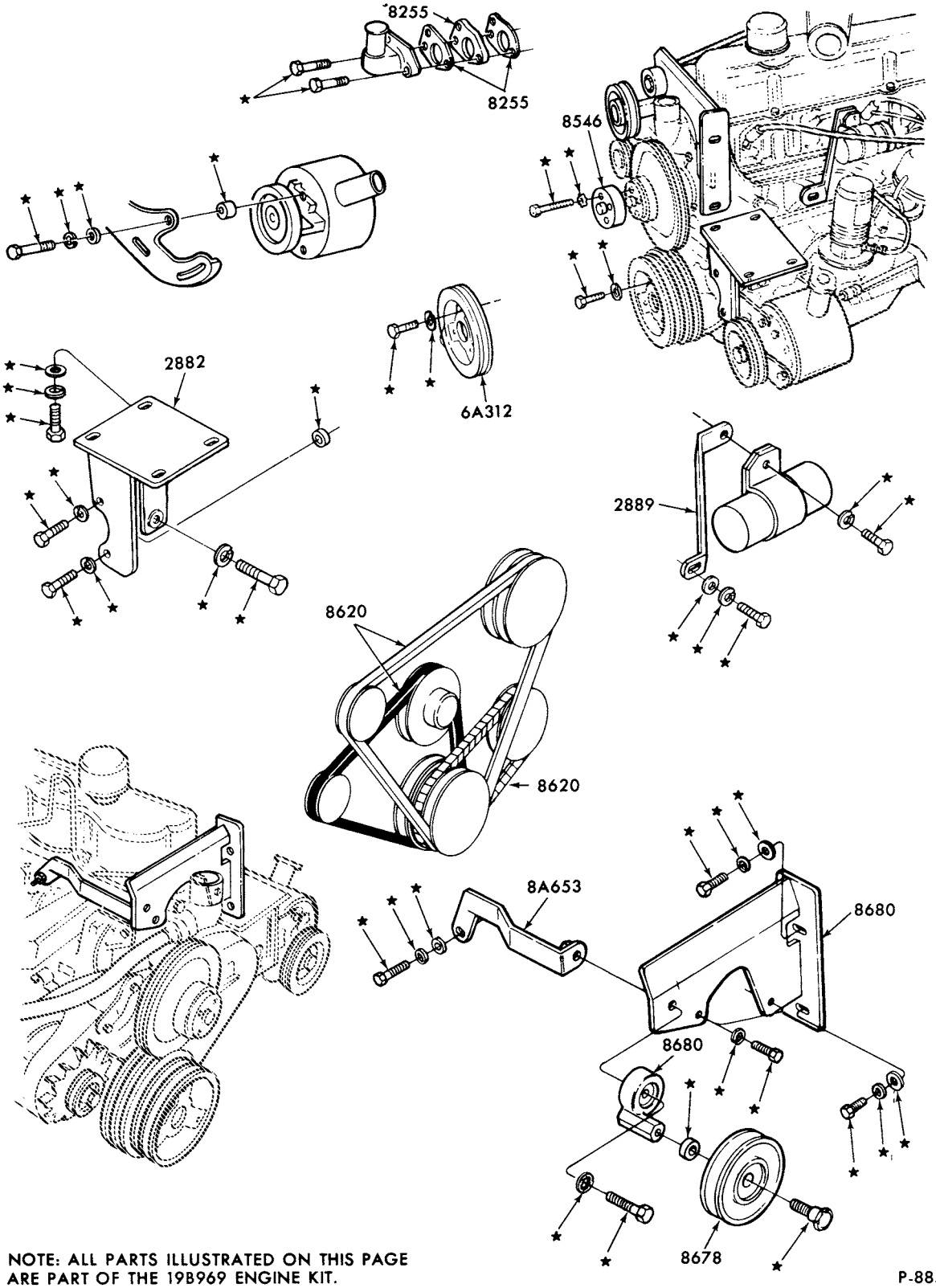

NOTE: ALL PARTS ILLUSTRATED ON THIS PAGE ARE PART OF THE 19B969 ENGINE KIT.

P-8857

AIR CONDITIONER PARTS-ENGINE COMPARTMENT-BUILT-IN A/C (DEALER INSTALLED)
1973/74 E100/300--6 CYL. 240, 300
1973/74 F100/250--6 CYL. 240,300

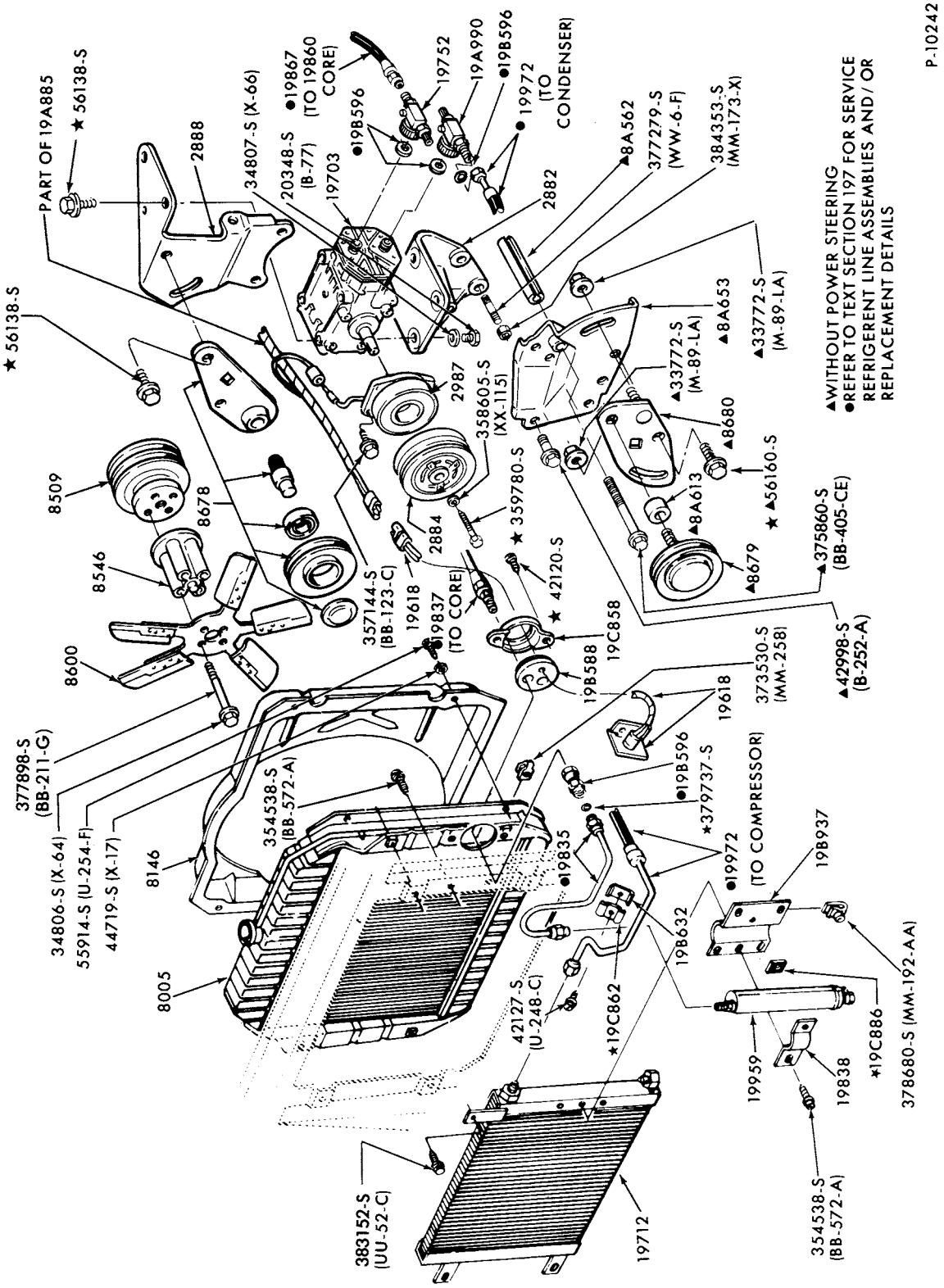

AIR CONDITIONER PARTS-ENGINE COMPARTMENT
1973/75 F100/350--8 CYL. 302 and INTEGRAL A/C

COPYRIGHT © 1979 FORD MOTOR COMPANY—DEARBORN, MICHIGAN

1973/79 TRUCK SERIES 100/500

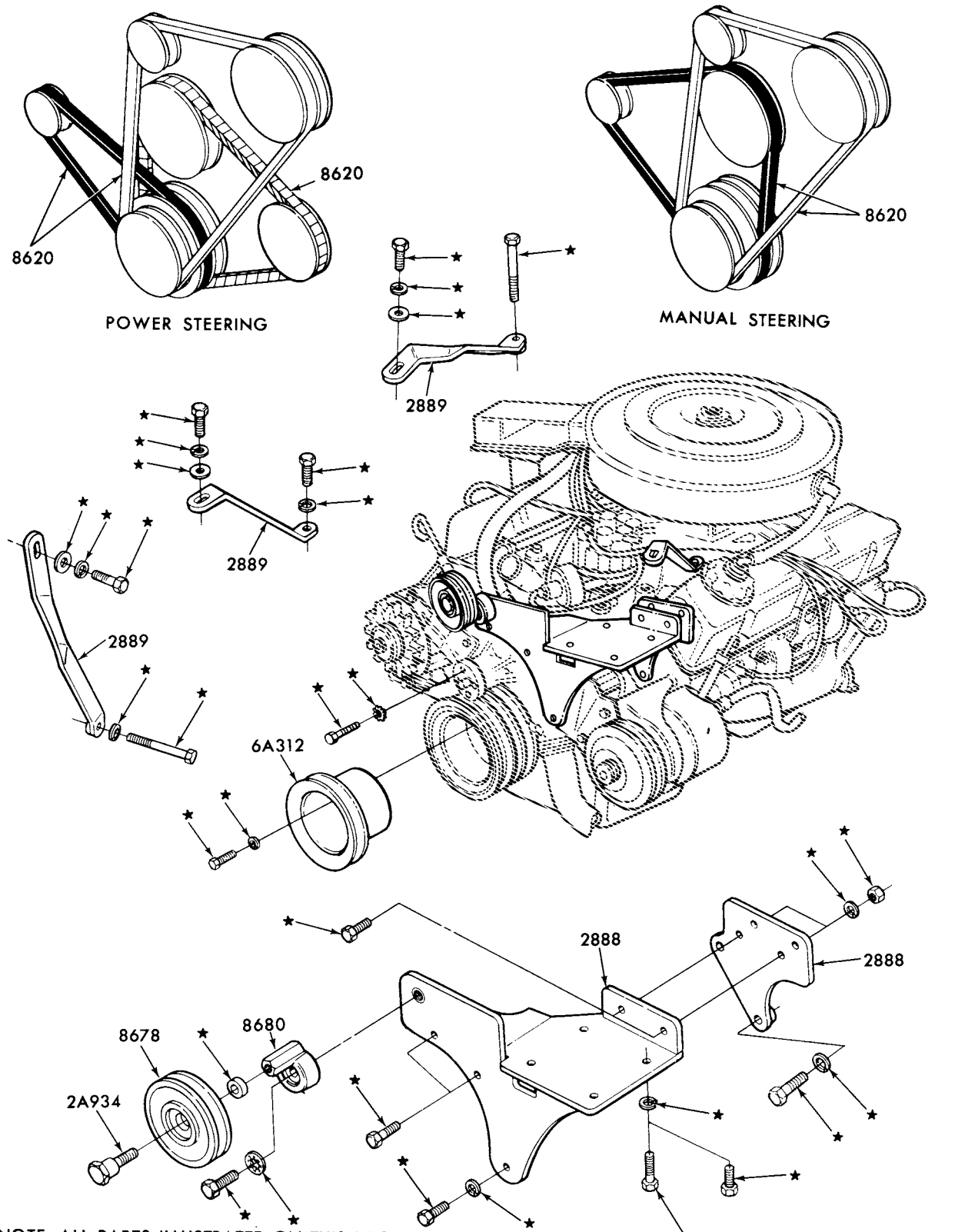

NOTE: ALL PARTS ILLUSTRATED ON THIS PAGE ARE PART OF THE 19B969 ENGINE KIT.

AIR CONDITIONER PARTS-ENGINE COMPARTMENT -BUILT-IN A/C (DEALER INSTALLED)
1973/ F100/250--8 CYL. 302

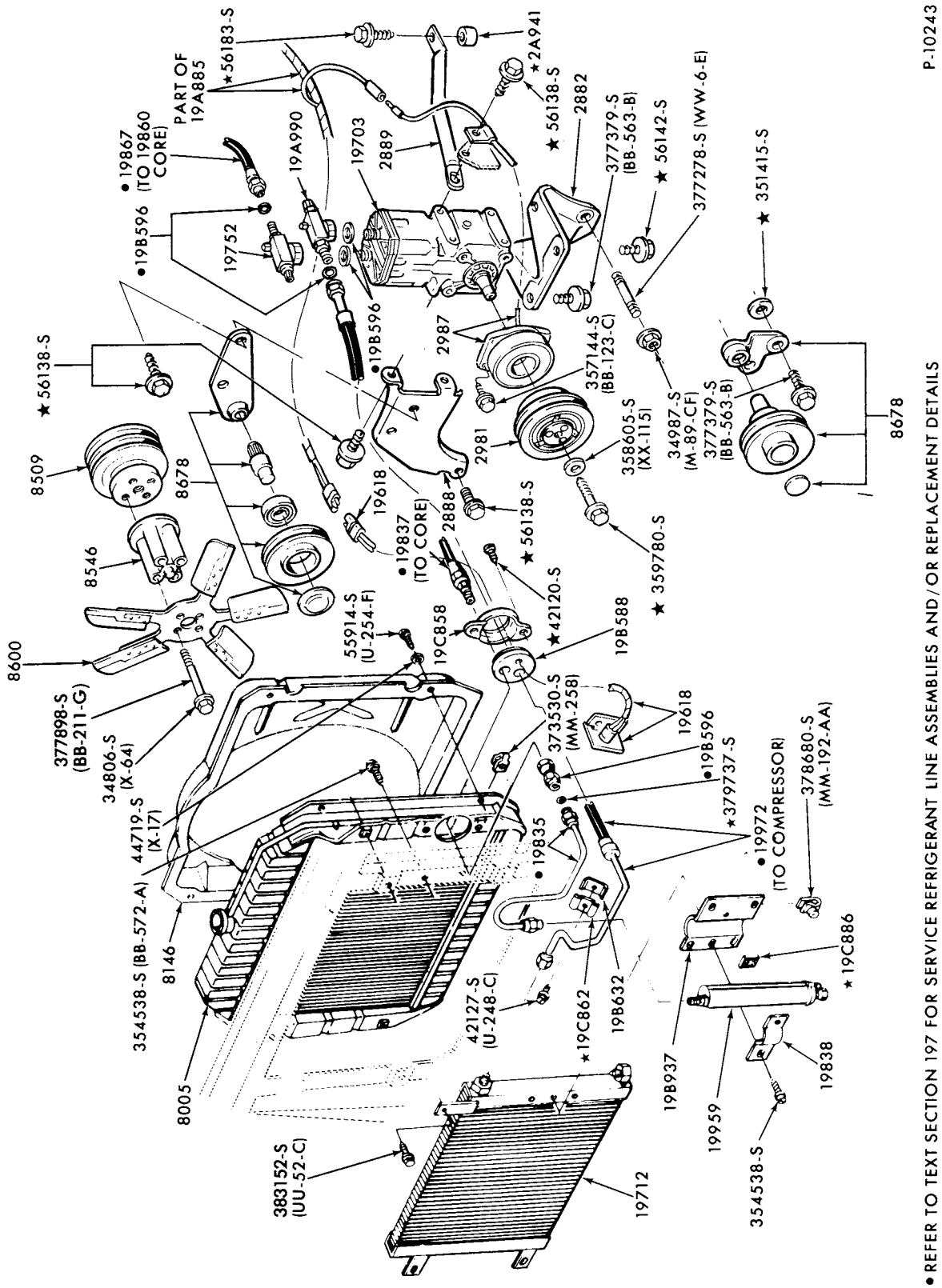

AIR CONDITIONER PARTS-ENGINE COMPARTMENT
1973/75 F100/350--8 CYL. 360, 390 and INTEGRAL A/C

COPYRIGHT © 1979 - FORD MOTOR-DEARBORN, MICHIGAN COMPANY

1973/79 TRUCK SERIES 100/500

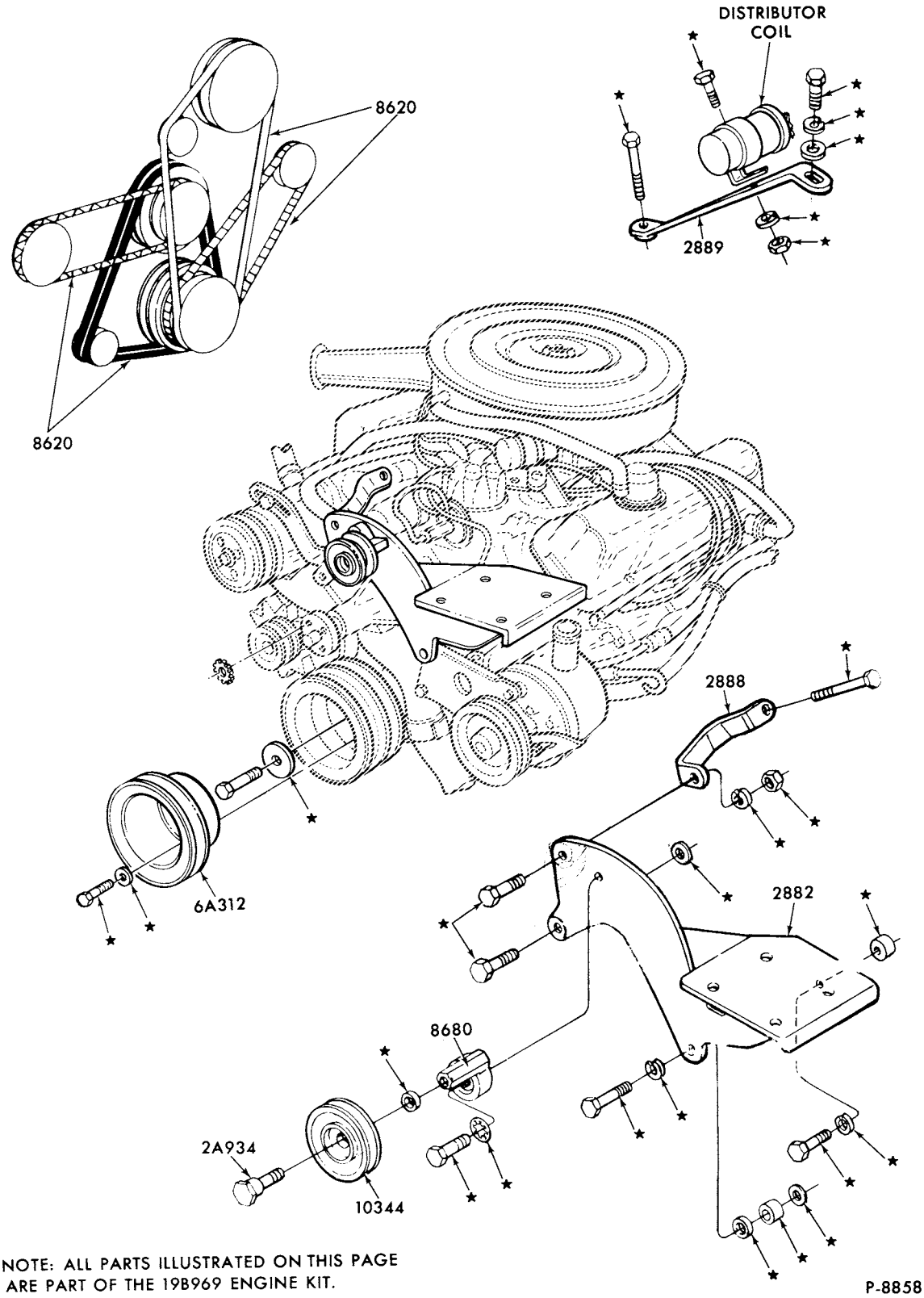

NOTE: ALL PARTS ILLUSTRATED ON THIS PAGE ARE PART OF THE 19B969 ENGINE KIT.

AIR CONDITIONER PARTS-ENGINE COMPARTMENT-BUILT-IN A/C (DEALER INSTALLED)
1973/ F100/250--8 CYL. 360, 390

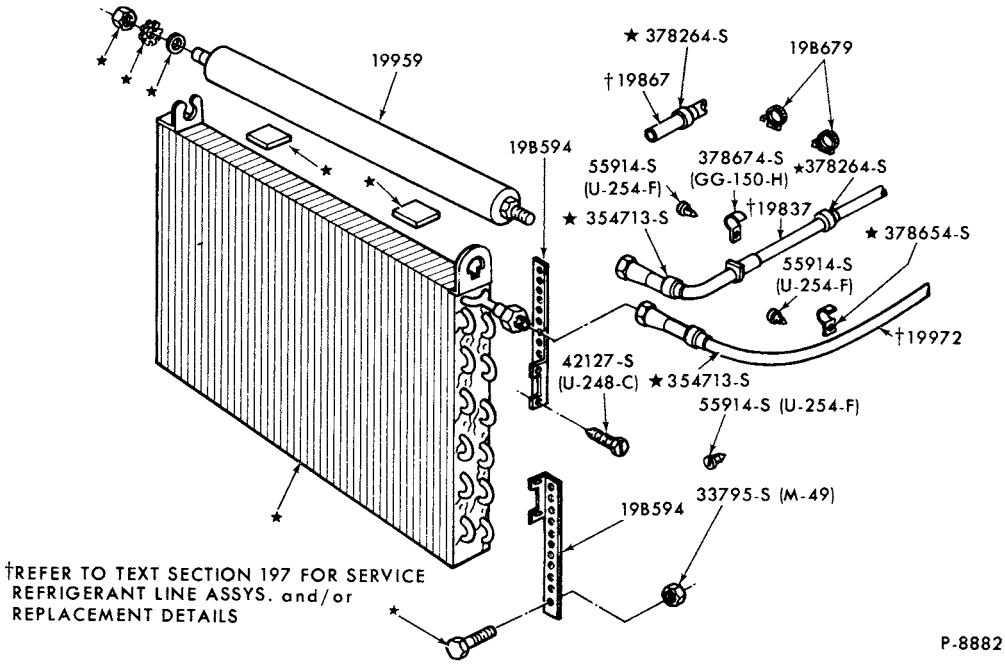

AIR CONDITIONER CONDENSER, DEHYDRATOR and RELATED PARTS - BUILT-IN A/C (DEALER INSTALLED)
1973/74 E100/300 1973/78 F100/250

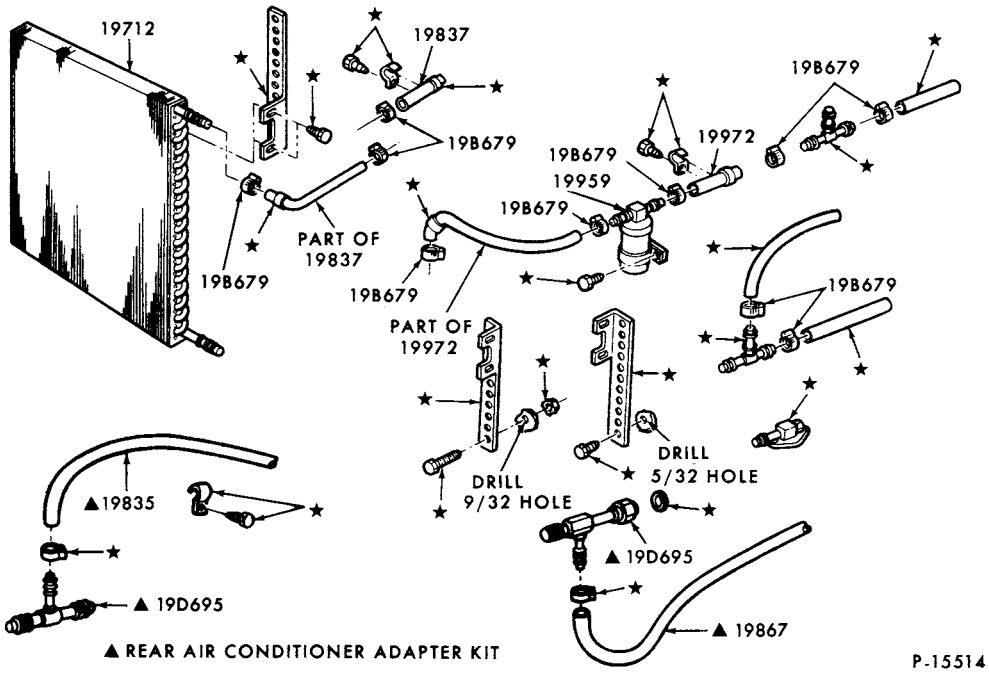

AIR CONDITIONER, CONDENSER, DEHYDRATOR and RELATED PARTS
BUILT-IN A/C (DEALER INSTALLED)
1979 E100/350--AUXILIARY A/C

COPYRIGHT © 1980 FORD MOTOR COMPANY, DEARBORN, MICHIGAN

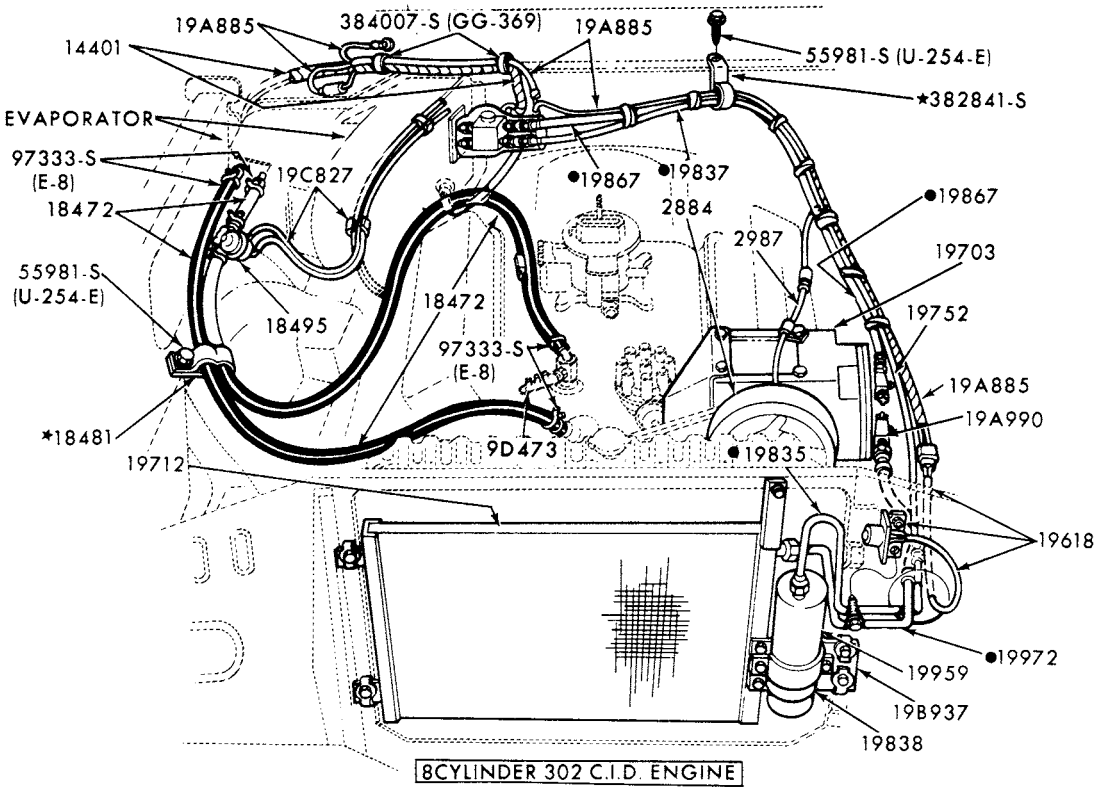

8CYLINDER 302 C.I.D. ENGINE

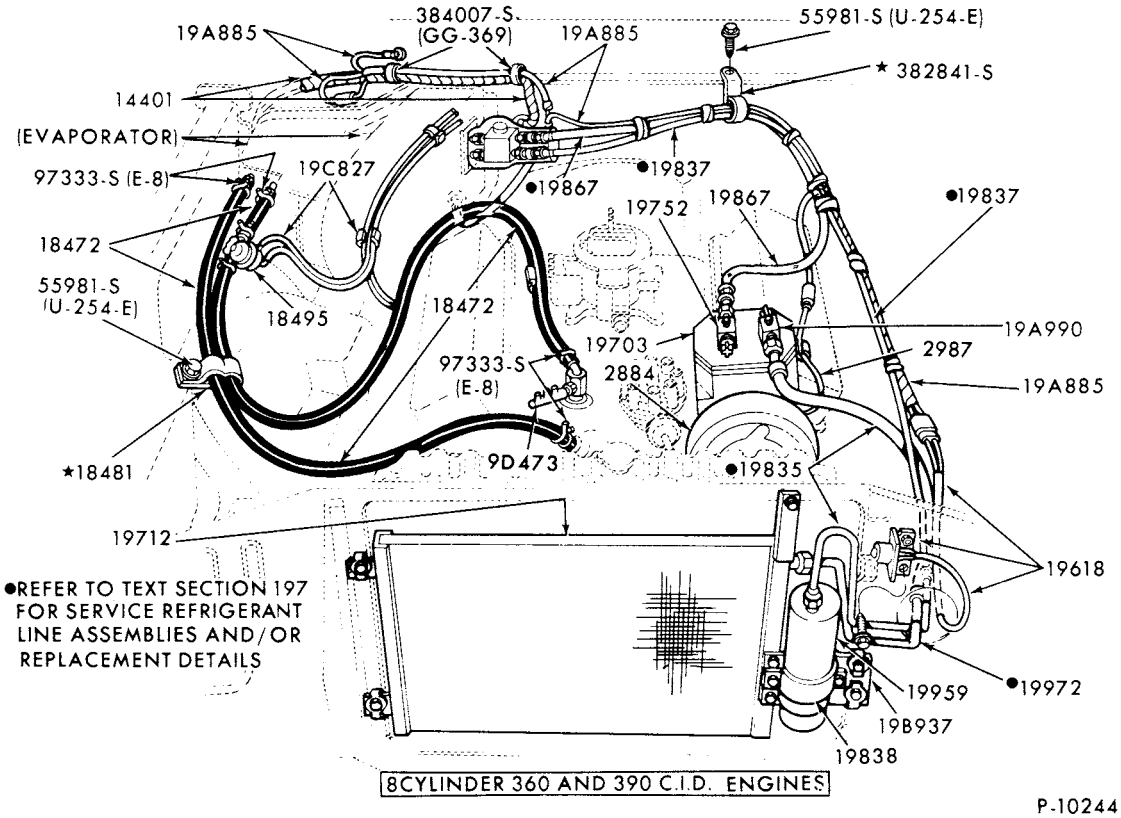

8CYLINDER 360 AND 390 C.I.D. ENGINES

P-10244

AIR CONDITIONER HOSES

1973/75 F100/350--INTEGRAL A/C

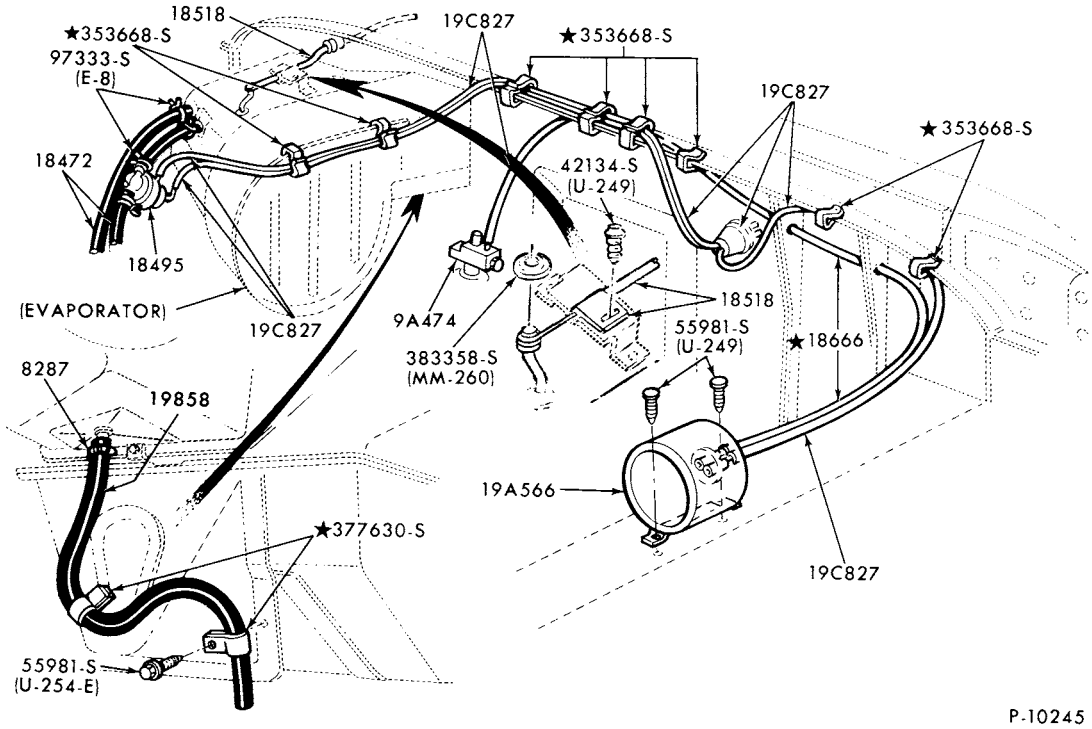

AIR CONDITIONER VACUUM RESERVOIR
1973/75 F100/350--INTEGRAL A/C

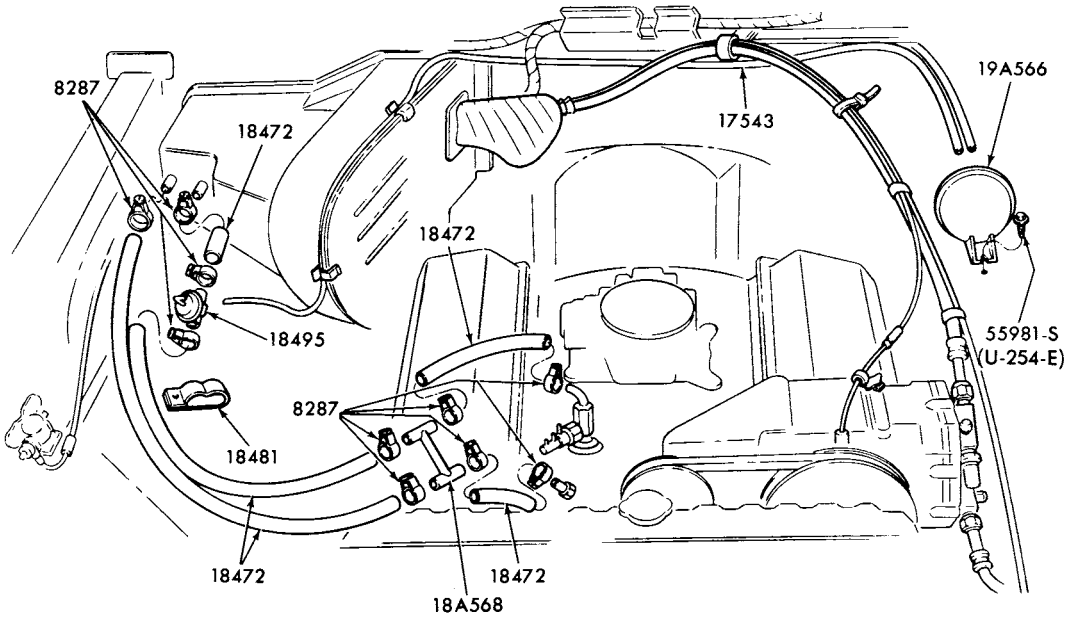

AIR CONDITIONER VACUUM HOSES
1976/ F100/350--8 CYL. 302 and INTEGRAL A/C

COPYRIGHT © 1979 FORD MOTOR-DEARBORN, MICHIGAN COMPANY

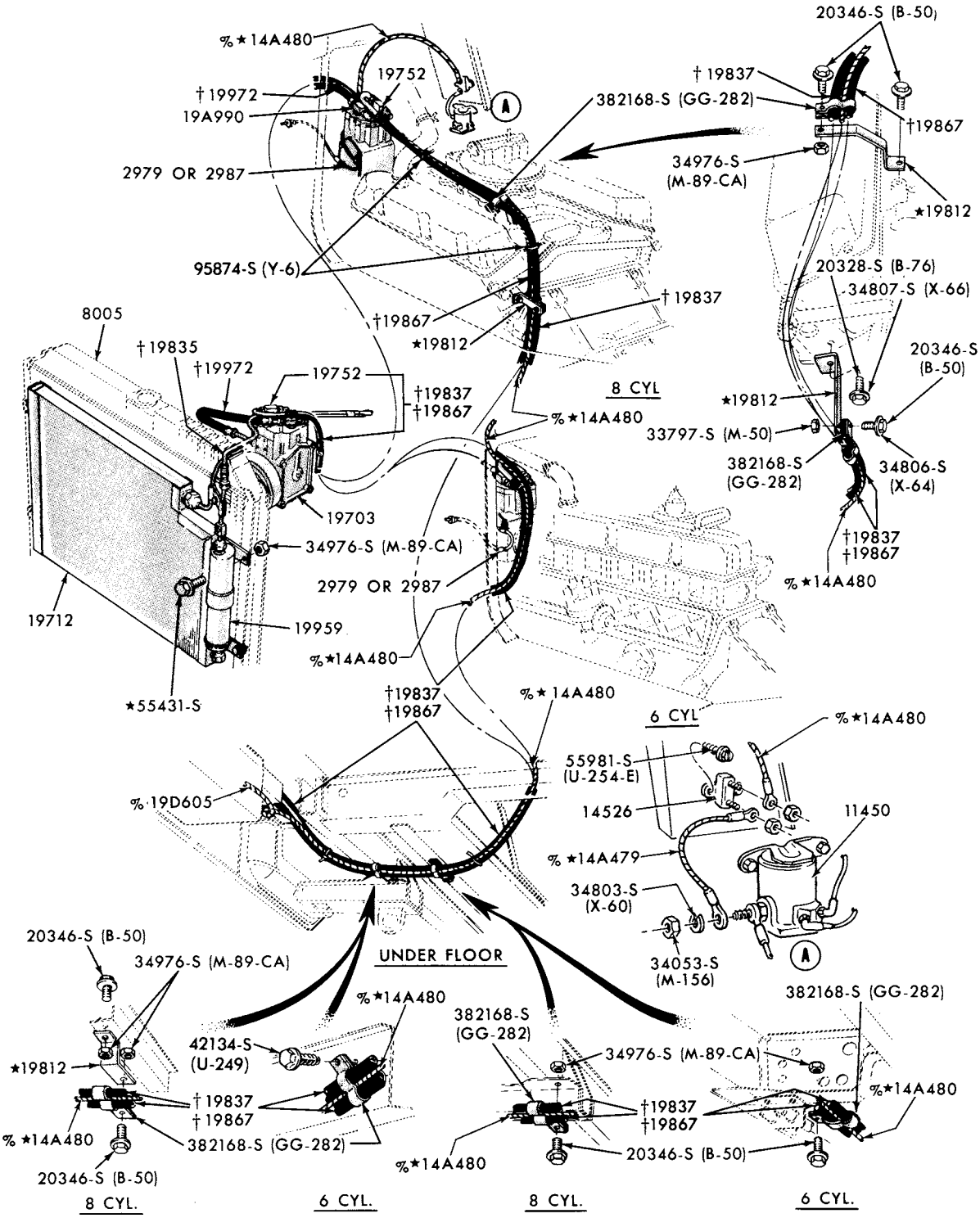

% WITH DUAL EVAPORATOR ONLY

† REFER TO TEXT SECTION 197 FOR SERVICE REFRIGERANT LINE ASSEMBLIES AND/OR REPLACEMENT DETAILS

P-6976

AIR CONDITIONER UNDER FLOOR TUBES and HOSES
1973/74 E100/300--INTEGRAL A/C

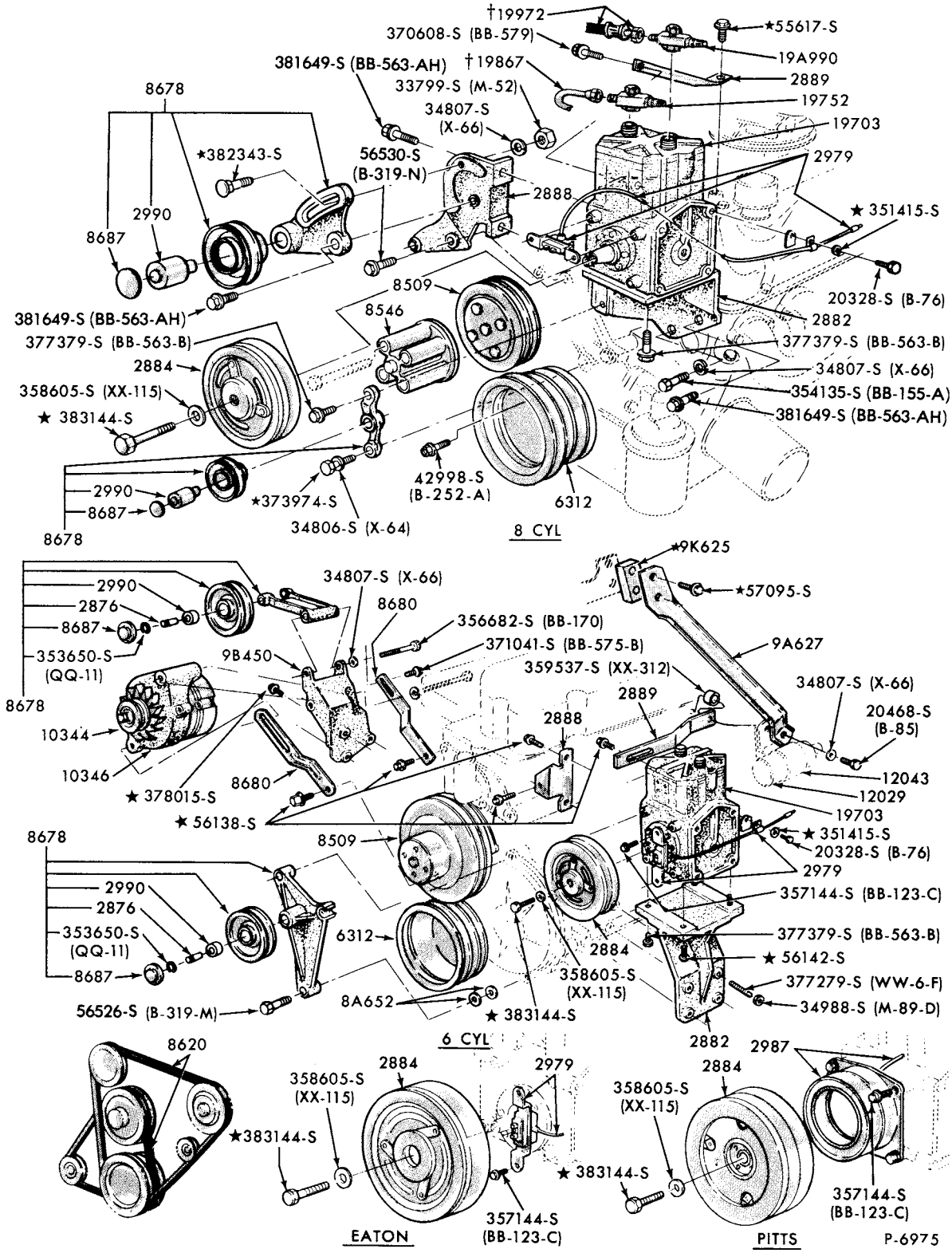

†REFER TO TEXT SECTION 197 FOR SERVICE REFRIGERANT LINE ASSYS. and/or REPLACEMENT DETAILS

AIR CONDITIONER COMPRESSOR BRACKETS and PULLEYS
1973/74 E100/300--INTEGRAL A/C

COPYRIGHT © 1979 FORD MOTOR COMPANY—DEARBORN, MICHIGAN

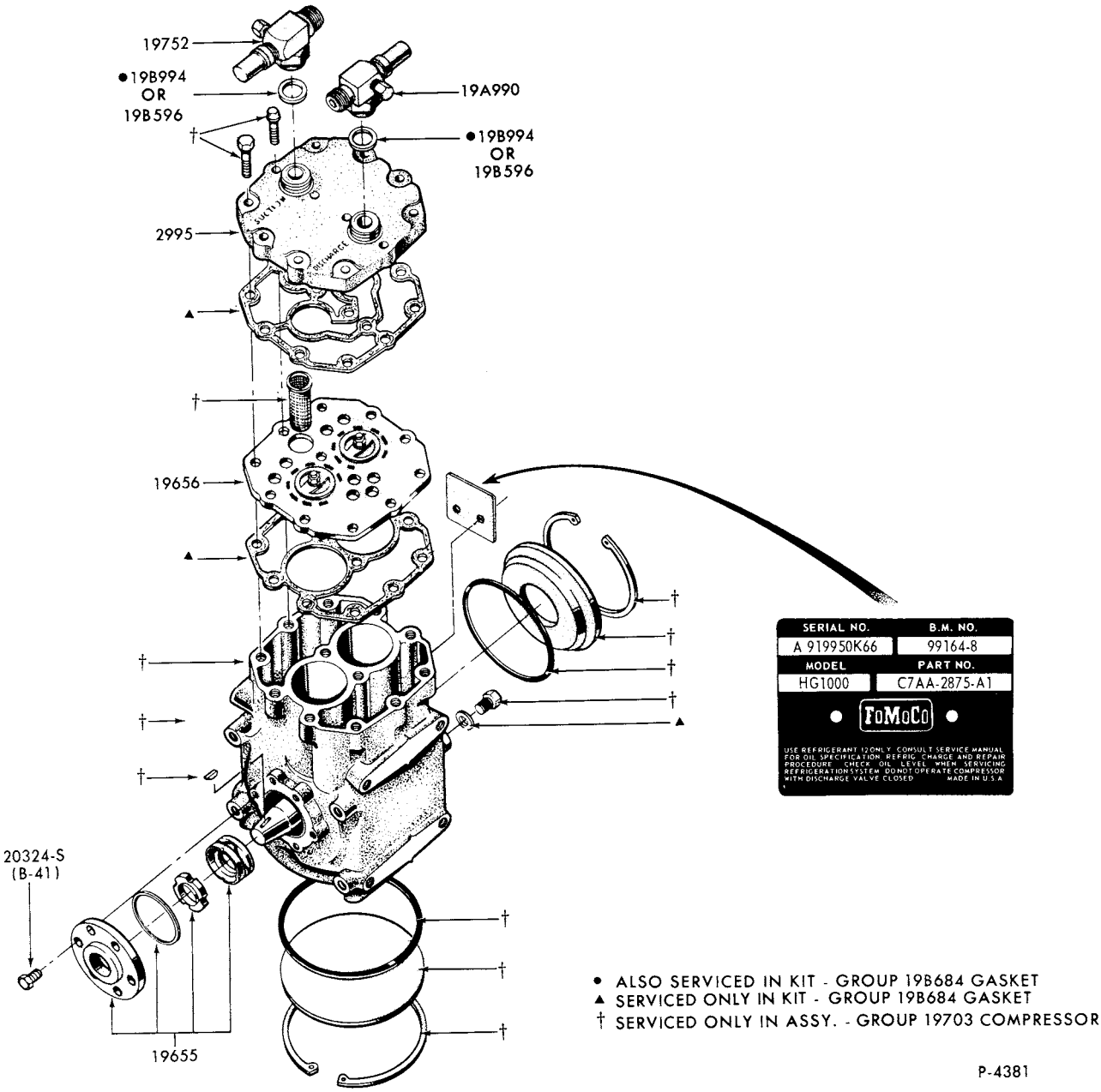

AIR CONDITIONER COMPRESSOR (TECUMSEH DESIGN-CAST IRON)
1973/ ALL

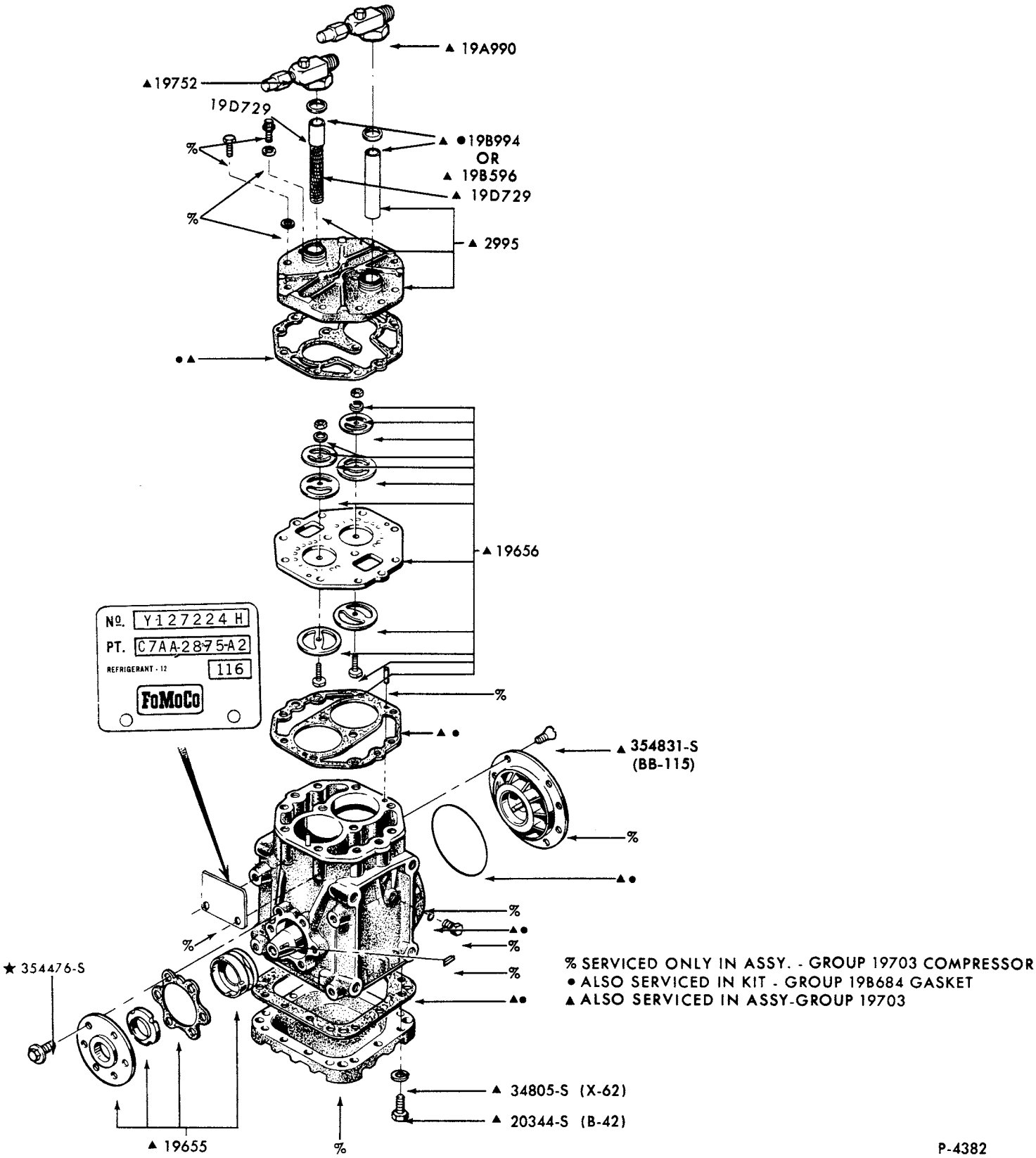

AIR CONDITIONER COMPRESSOR (YORK DESIGN-ALUMINUM)
1973/ ALL

COPYRIGHT © 1980— FORD MOTOR COMPANY —DEARBORN, MICHIGAN

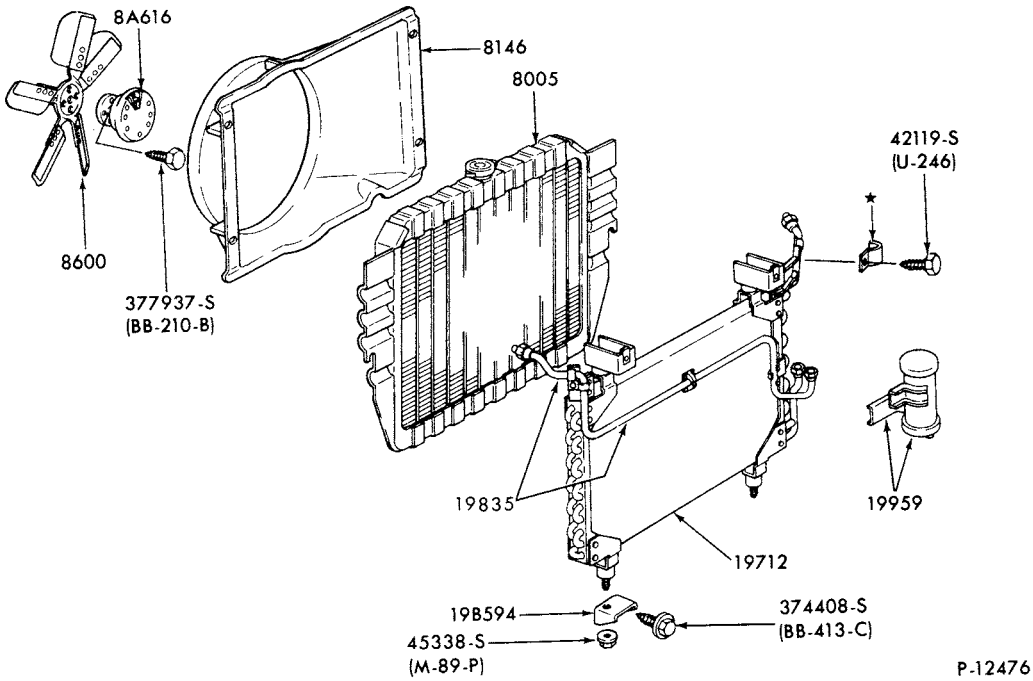

AIR CONDITIONER CONDENSER and DEHYDRATOR
1975/ E100/350--with INTEGRAL A/C

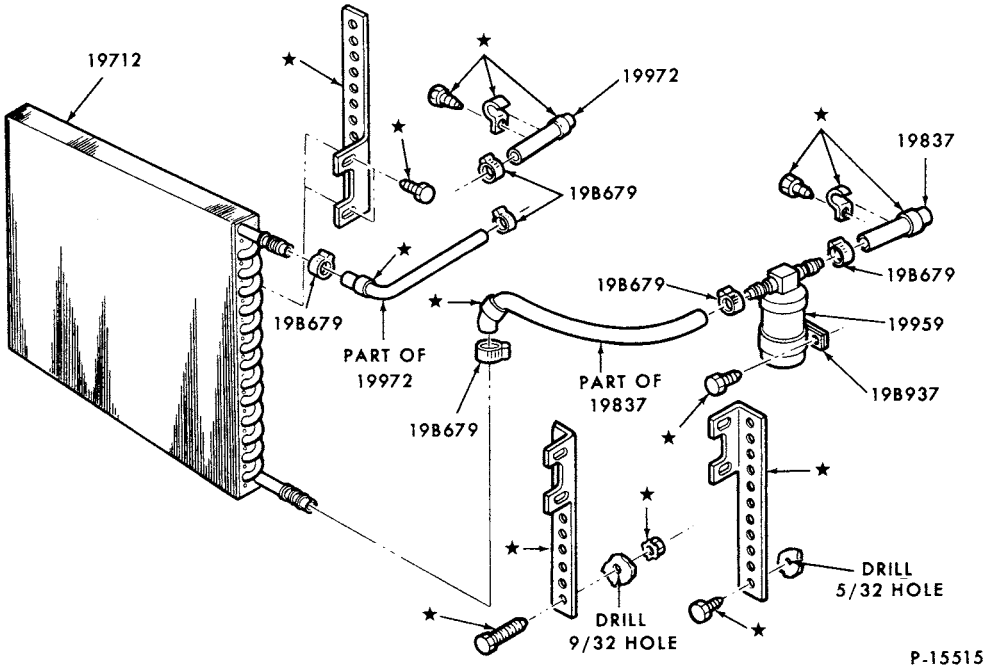

AIR CONDITIONER, CONDENSER, DEHYDRATOR and RELATED PARTS
BUILT-IN A/C (DEALER INSTALLED)
1979 E-F100/350

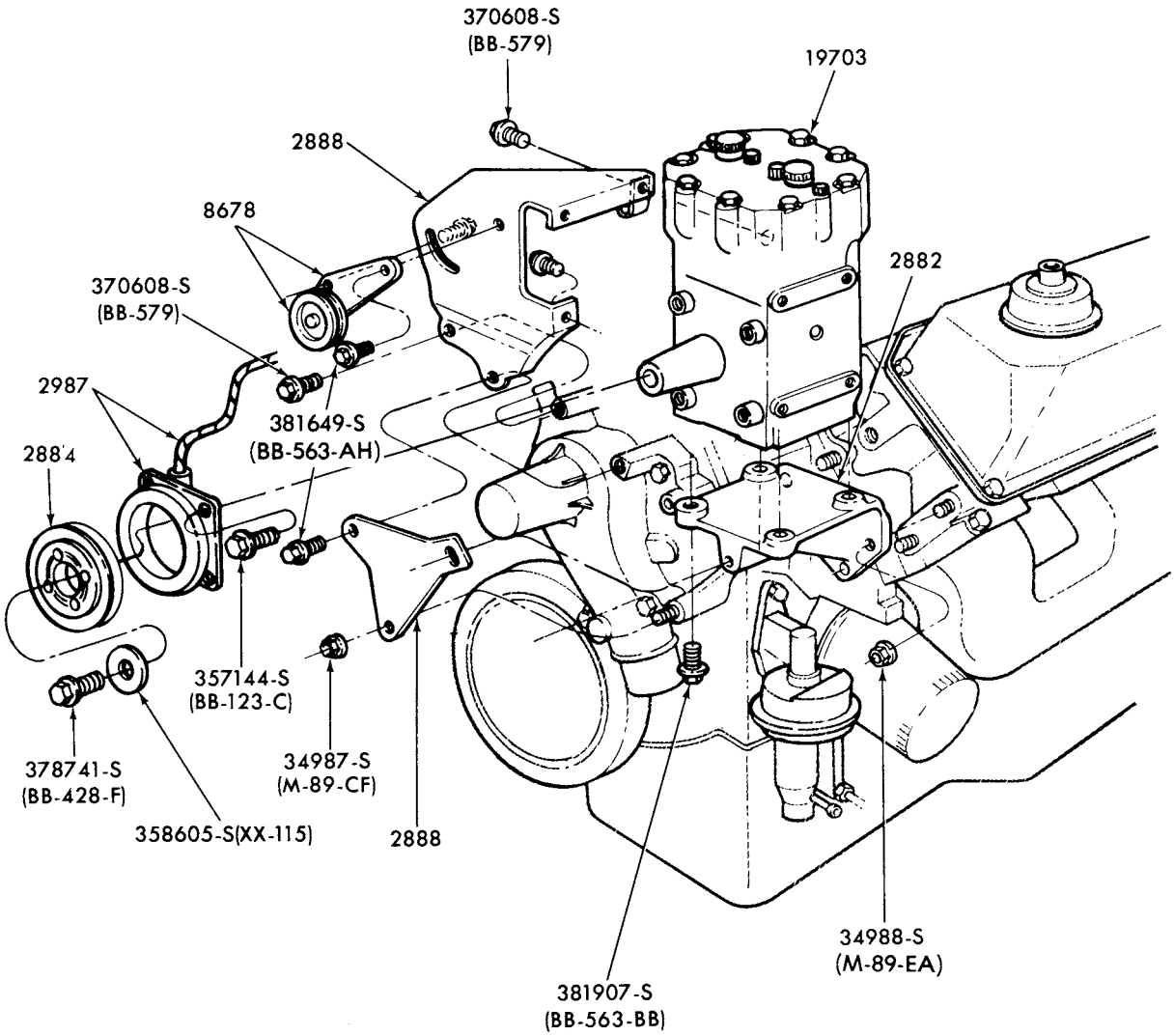

P-12477

AIR CONDITIONER COMPRESSOR INSTALLATION
1975/ E100/350--8 CYL. 351 and INTEGRAL A/C

COPYRIGHT © 1979 FORD MOTOR COMPANY, DEARBORN, MICHIGAN

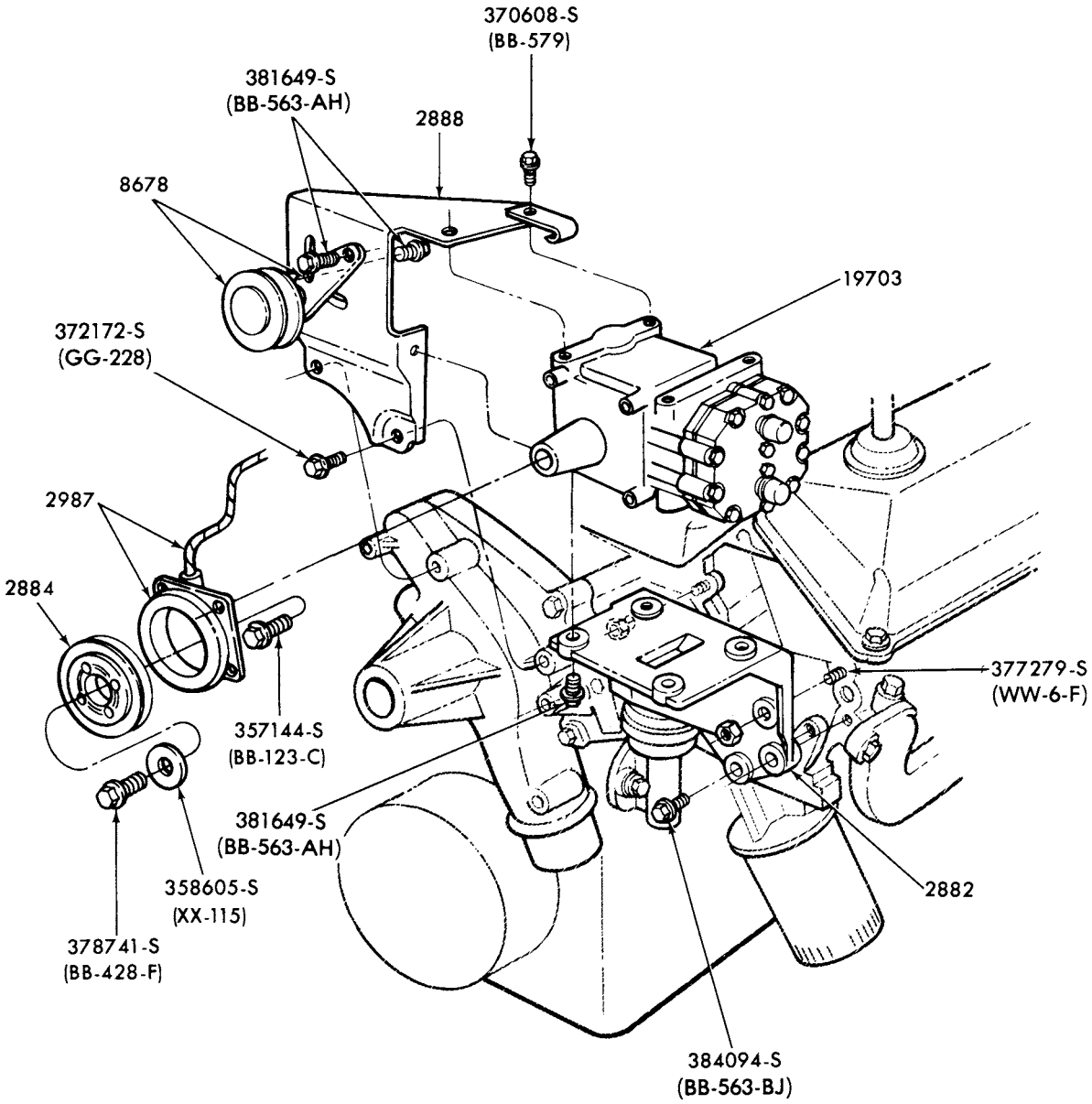

P-12478

AIR CONDITIONER COMPRESSOR INSTALLATION
1975/ E250/350--8 CYL. 460 and INTEGRAL A, C

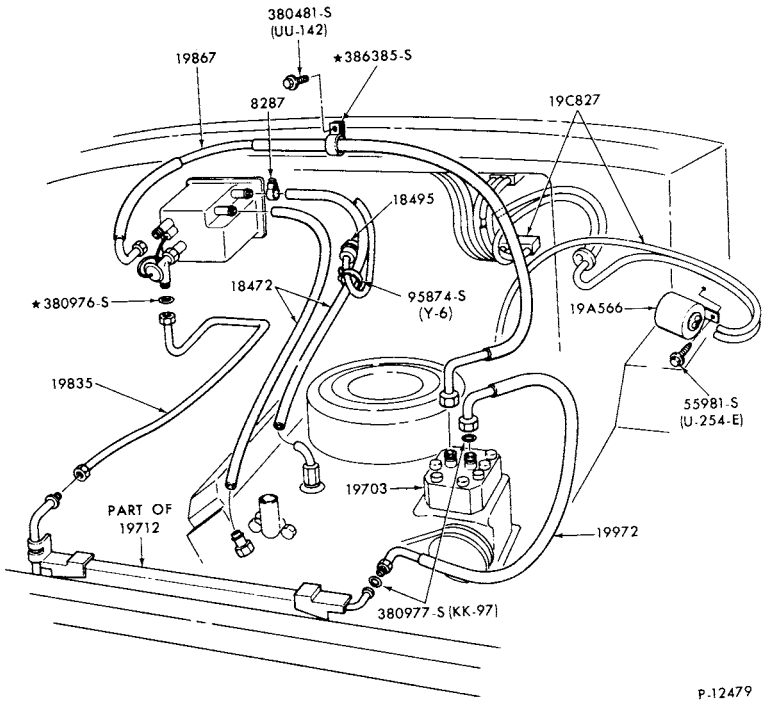

AIR CONDITIONER HOSES (MAIN)
1975/ E100/350--8 CYL. 351 and INTEGRAL A/C

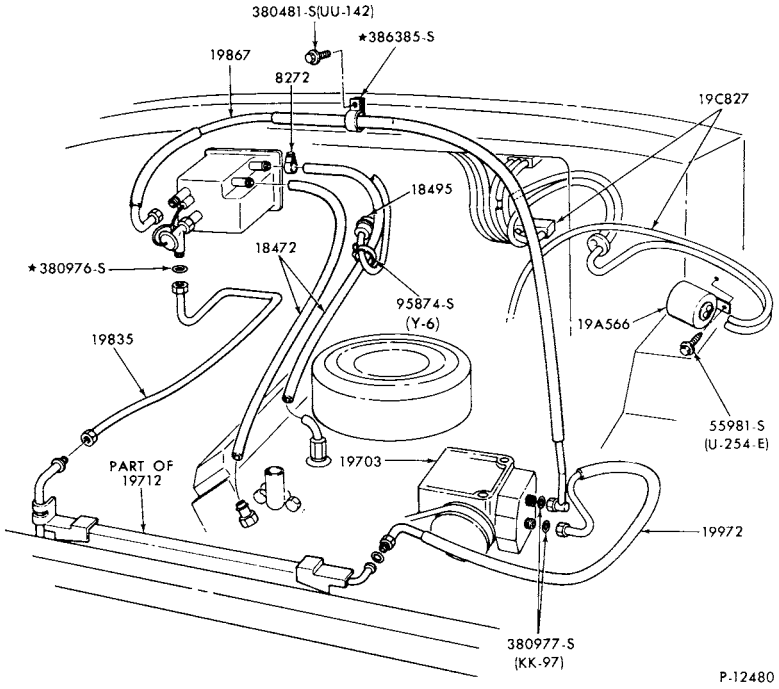

AIR CONDITIONER HOSES (MAIN)
1975/ E250/350--8 CYL. 460 and INTEGRAL A/C

COPYRIGHT © 1979 -FORD MOTOR-DEARBORN, MICHIGAN
COMPANY

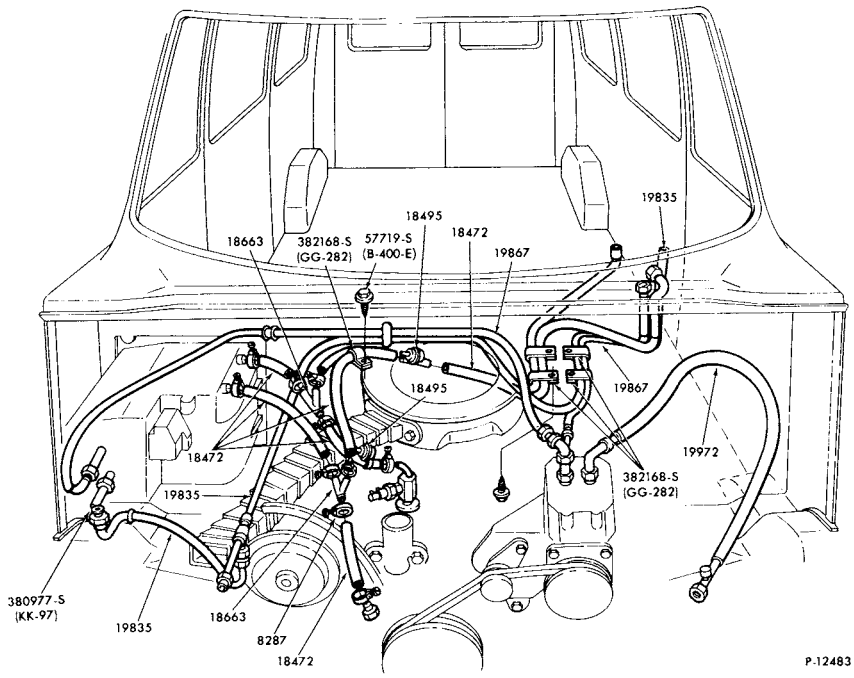

AIR CONDITIONER HOSES (MAIN and AUXILIARY)
1975/ E100/350--8 CYL. with AUXILIARY A/C

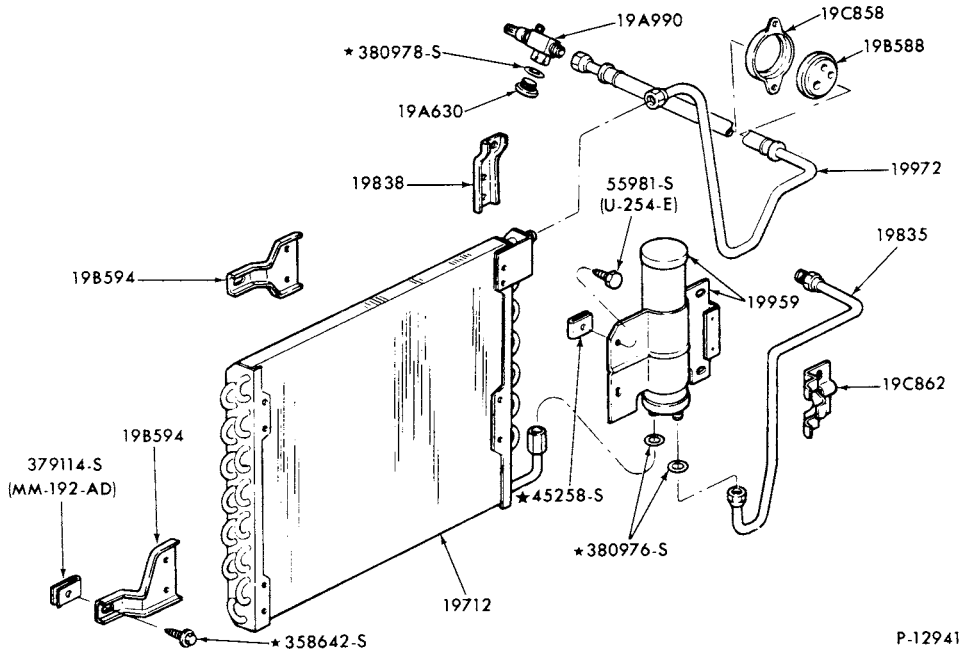

AIR CONDITIONER CONDENSER and DEHYDRATOR
1976/ F100/350

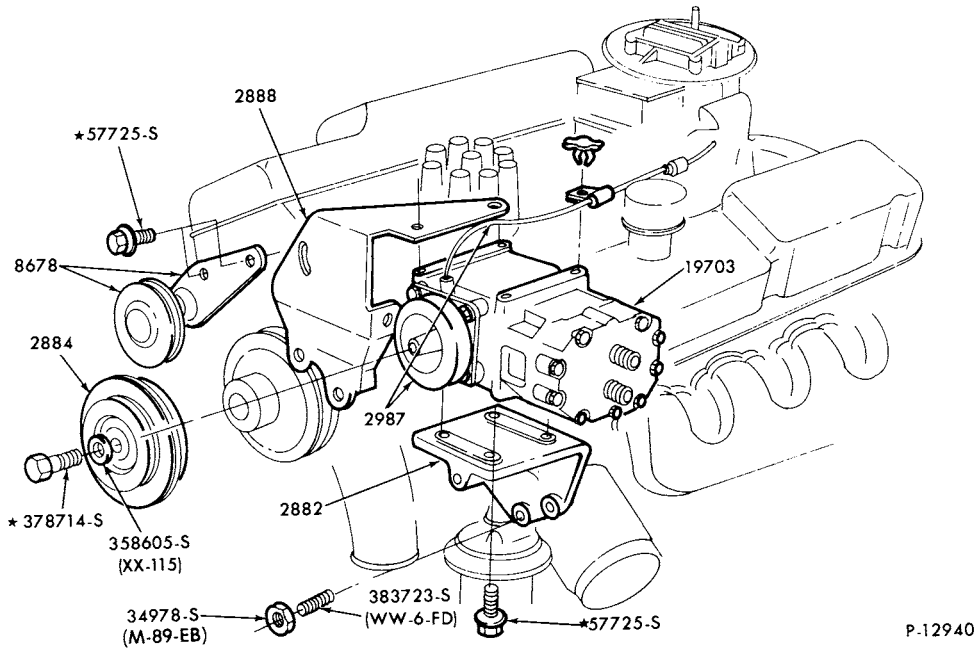

AIR CONDITIONER COMPRESSOR INSTALLATION
1976/ F100/350--8 CYL. 302 and INTEGRAL A/C

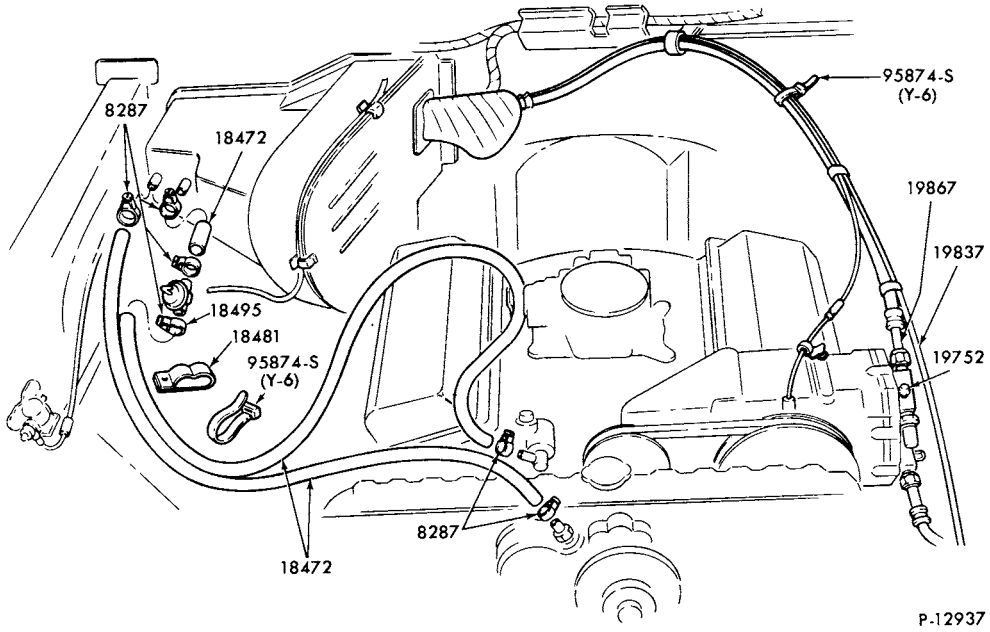

AIR CONDITIONER VACUUM HOSES
1976/ F100/350--8 CYL. 360,390,460 and INTEGRAL A/C

COPYRIGHT © 1979 -FORD MOTOR-DEARBORN, MICHIGAN COMPANY

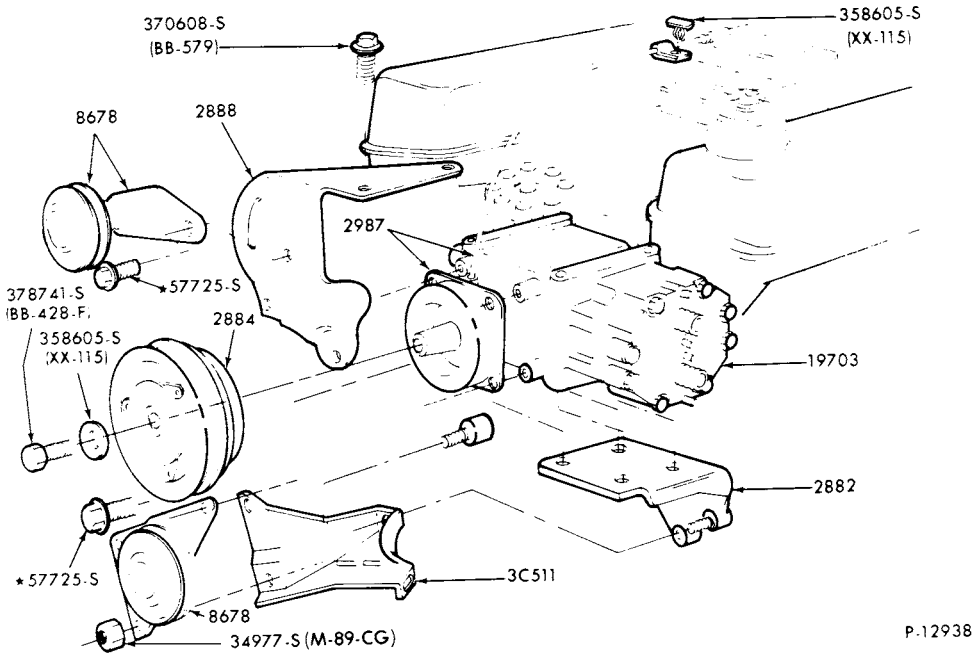

AIR CONDITIONER COMPRESSOR INSTALLATION
1976/ F150/350--8 CYL. 460 and INTEGRAL A/C

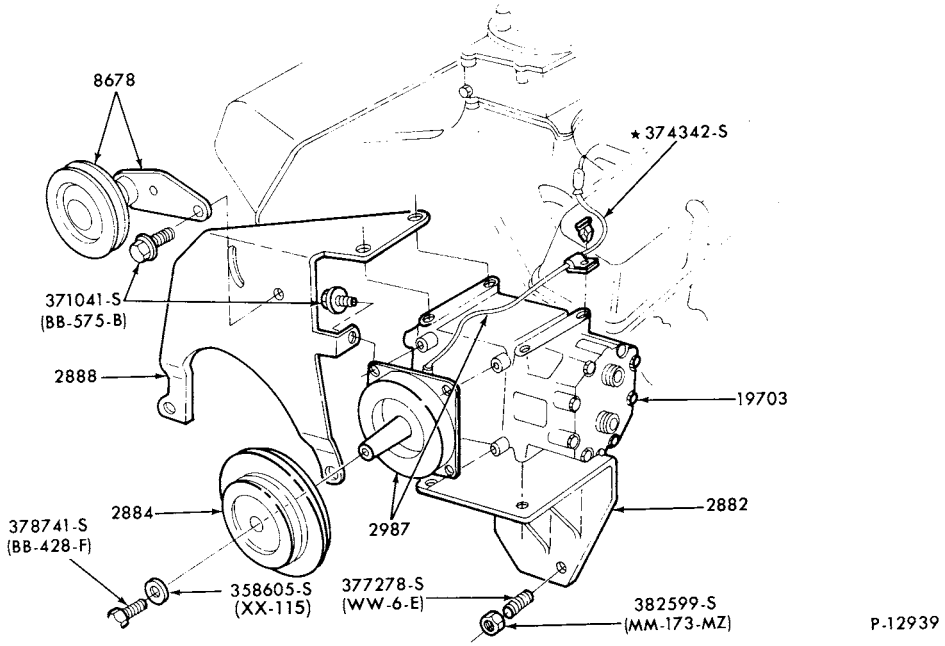

AIR CONDITIONER COMPRESSOR INSTALLATION
1976/ F100/350--8 CYL. 360, 390 and INTEGRAL A/C

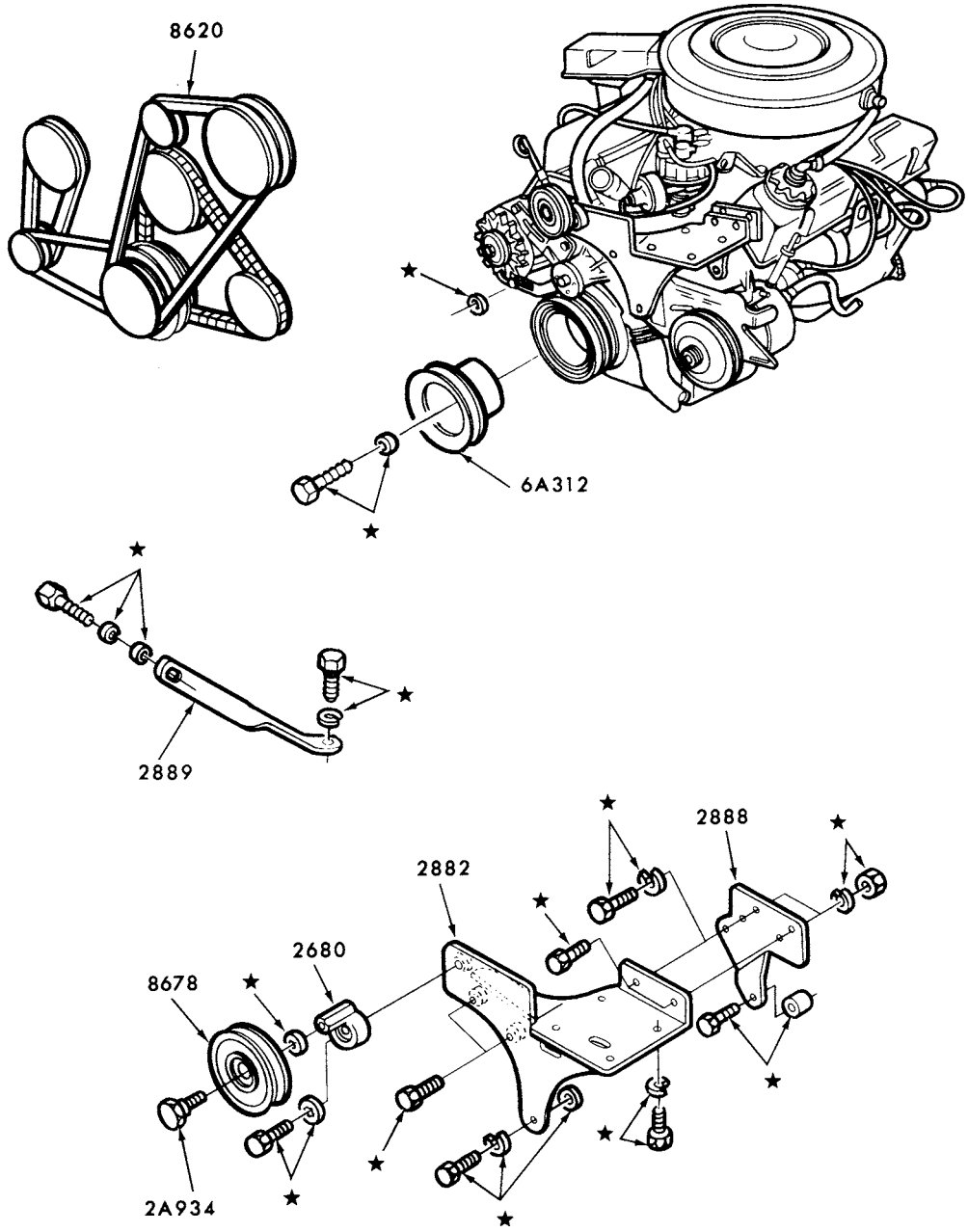

P-15507

AIR CONDITIONER COMPRESSOR BRACKETS and PULLEYS BUILT-IN A/C (DEALER INSTALLED)
1979 E100/350--8 CYL. 302 and 351

COPYRIGHT © 1980 FORD MOTOR COMPANY, DEARBORN, MICHIGAN

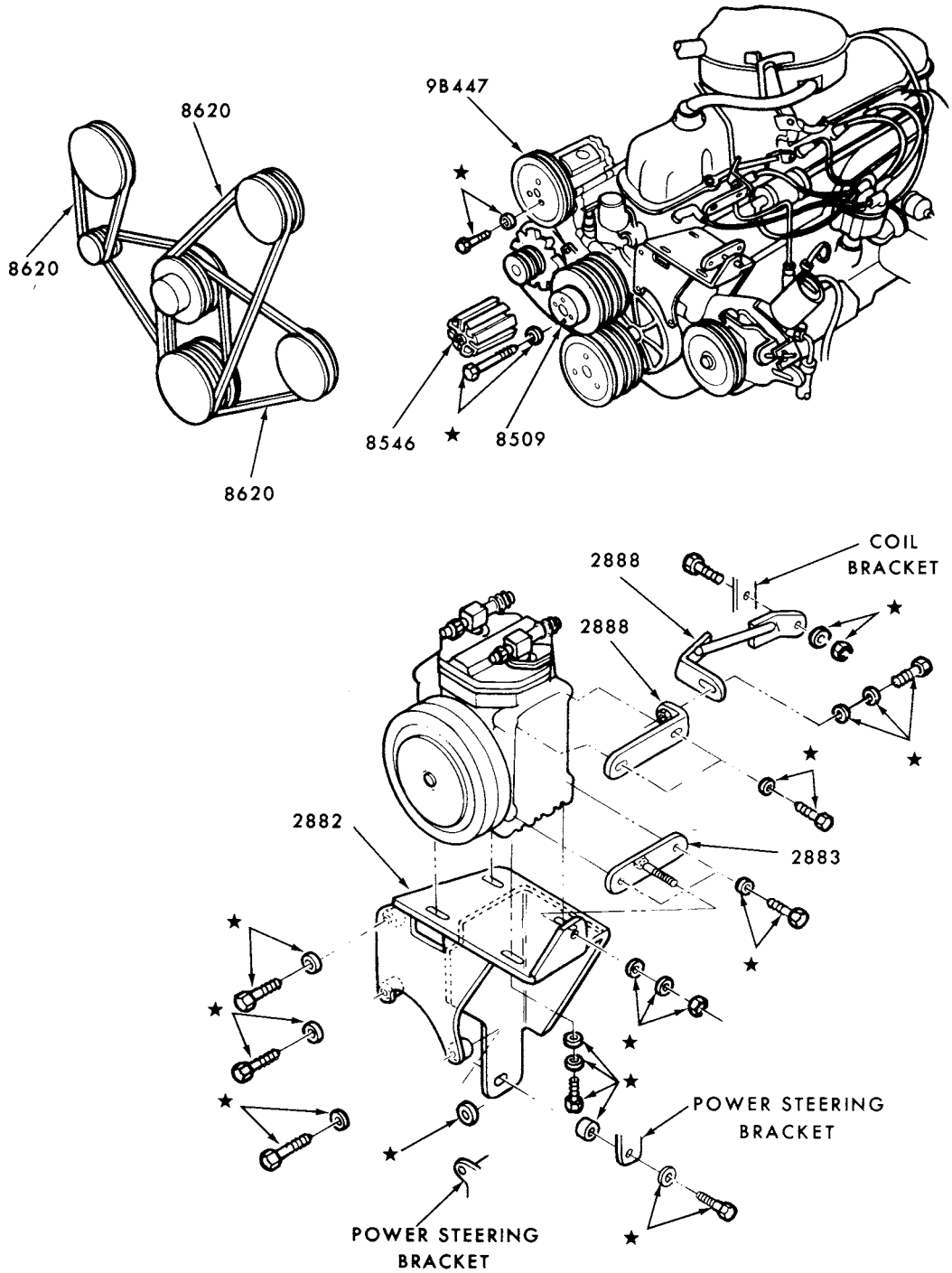

AIR CONDITIONER COMPRESSOR BRACKETS and PULLEYS BUILT-IN A/C (DEALER INSTALLED)
1979 E-F100/350--6 CYL. 300

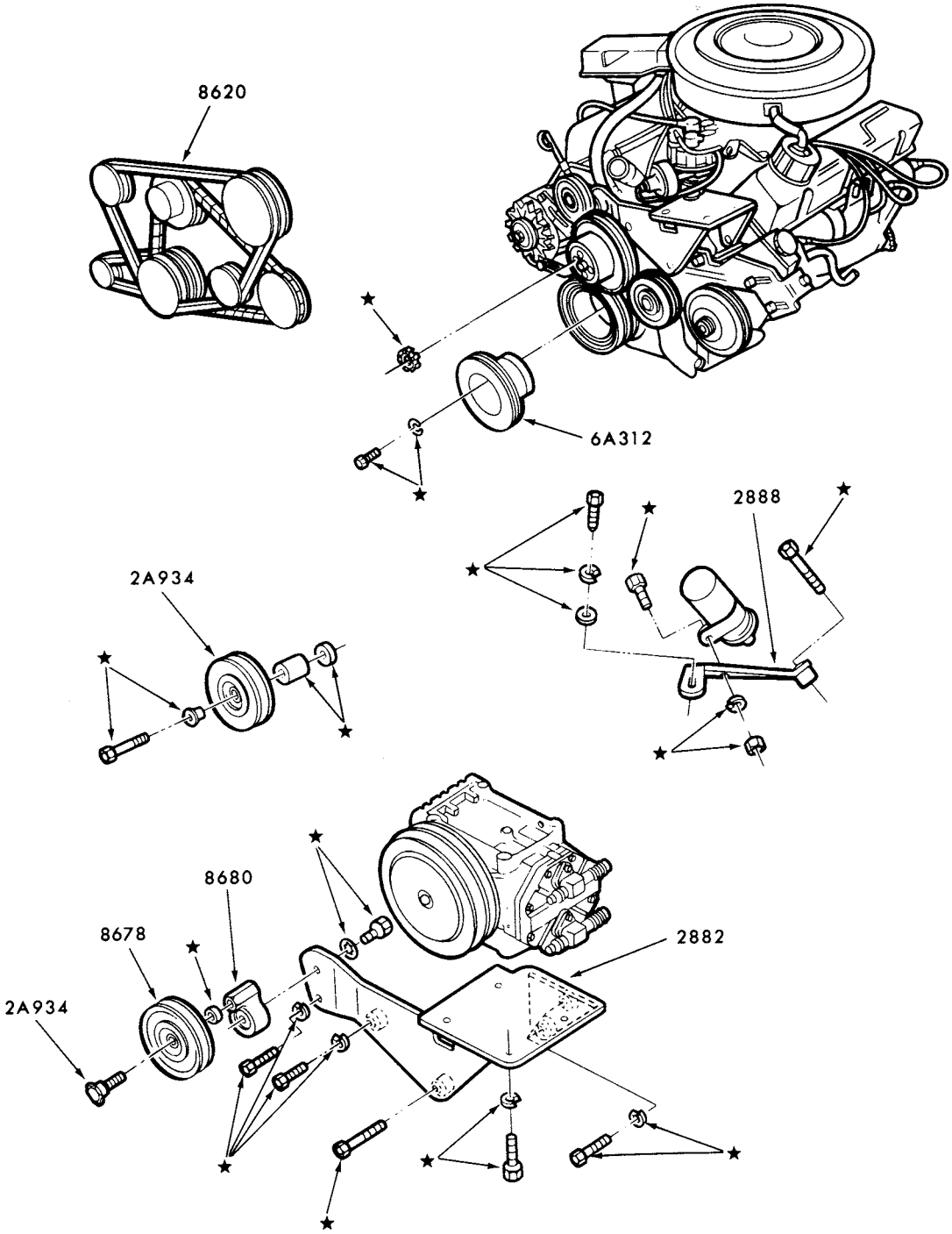

P-15506

AIR CONDITIONER COMPRESSOR BRACKETS and PULLEYS BUILT-IN A/C (DEALER INSTALLED)
1979 E100/350--8 CYL. 460

COPYRIGHT © 1980 FORD MOTOR COMPANY, DEARBORN, MICHIGAN

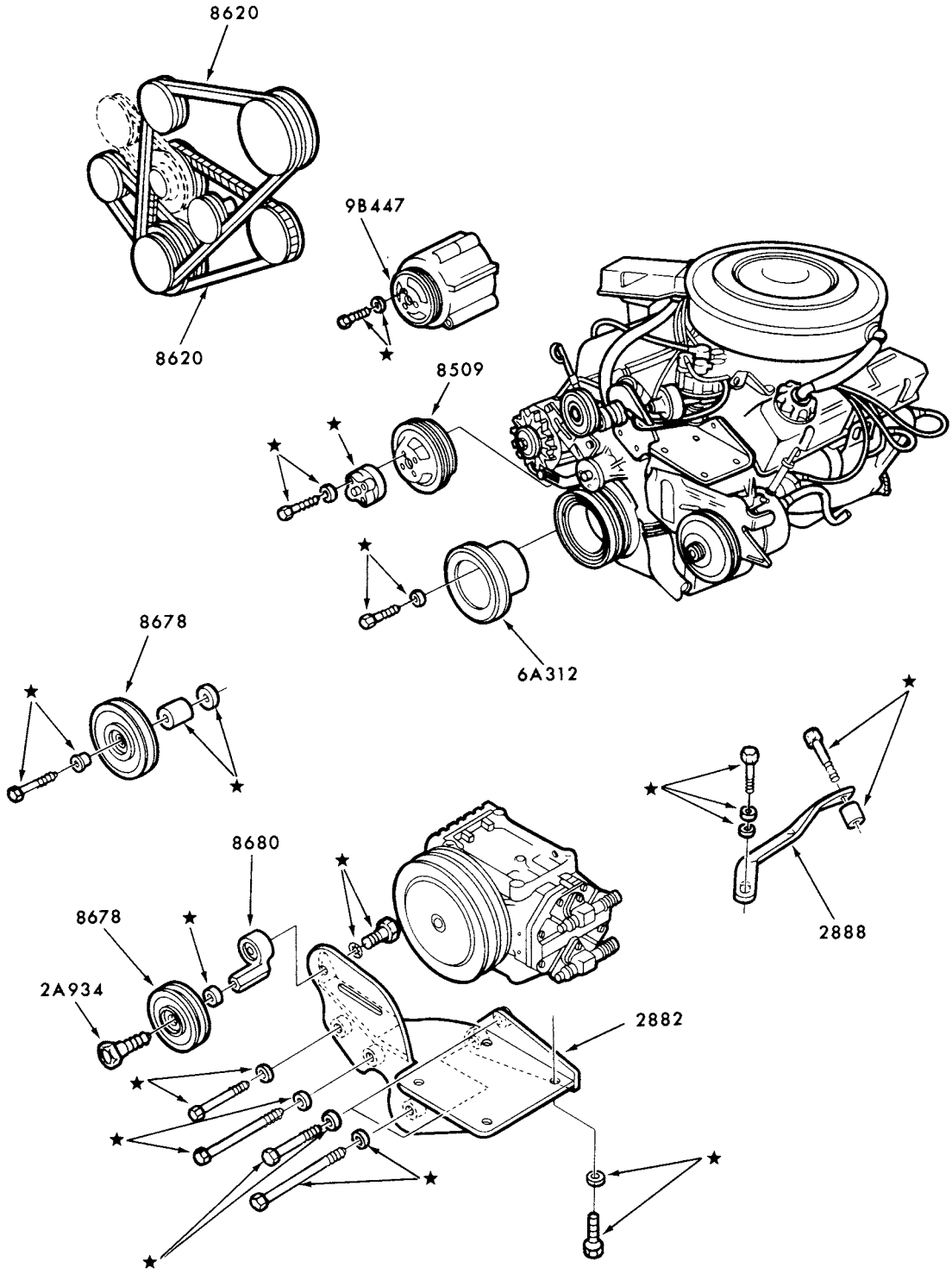

P-15505

AIR CONDITIONER COMPRESSOR BRACKETS and PULLEYS BUILT-IN A/C (DEALER INSTALLED)
1979 F100/350--8 CYL. 400

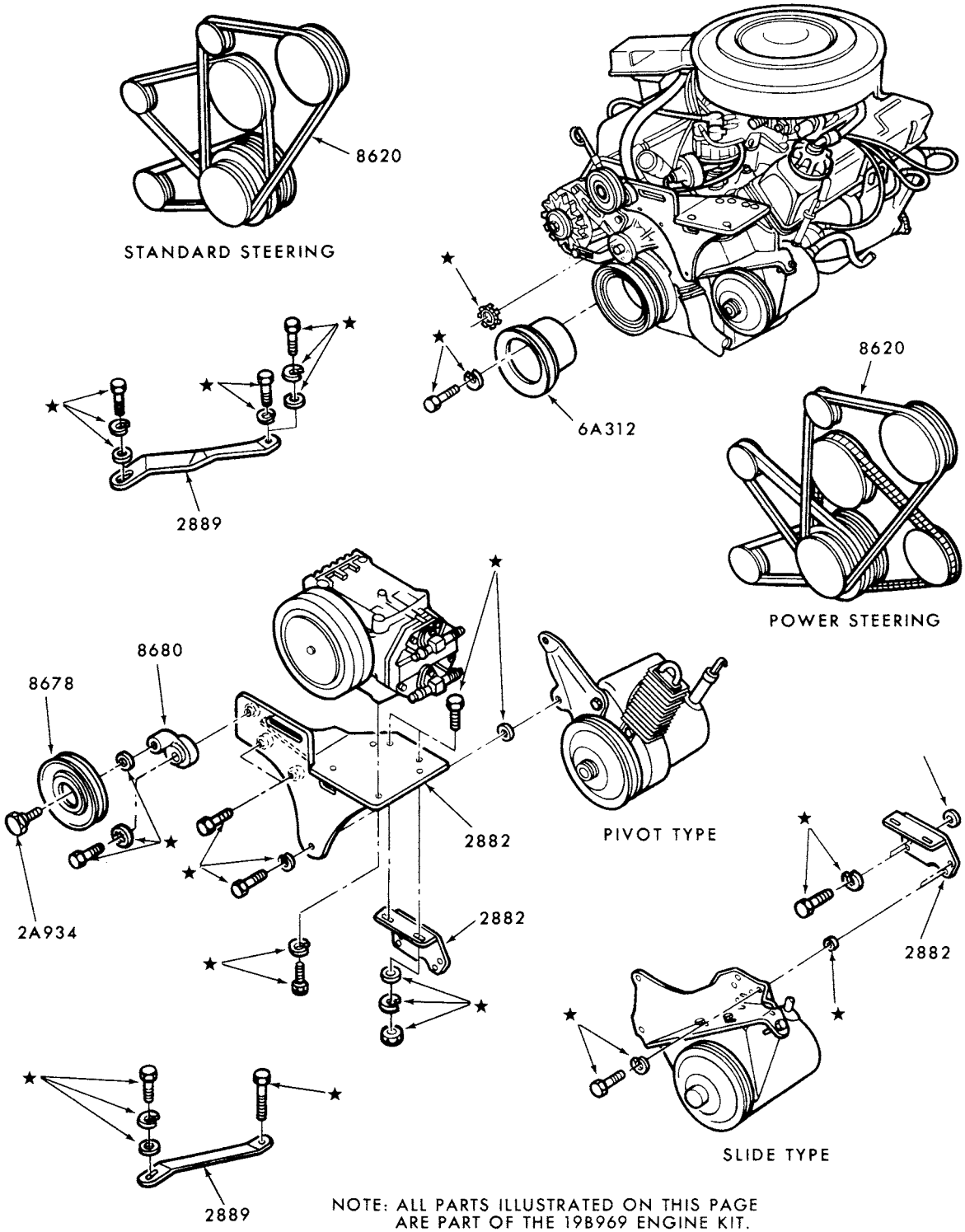

NOTE: ALL PARTS ILLUSTRATED ON THIS PAGE ARE PART OF THE 19B969 ENGINE KIT.

P-15501

AIR CONDITIONER COMPRESSOR BRACKETS and PULLEYS BUILT-IN A/C (DEALER INSTALLED)
1979 F100/350--8 CYL. 302 and 351

COPYRIGHT © 1980 FORD MOTOR COMPANY, DEARBORN, MICHIGAN

INDEX

INCLUDED IN THIS INDEX ARE THE FOLLOWING MAJOR GROUPS

DOORS and WINDOWS
EXTERIOR MOULDINGS, ETC.
INSTRUMENT PANEL, PAD
SEATS and SEAT BELTS
SHEET METAL
TRIM

YEAR 19__	TITLE	MODEL	SECTION	PAGE	ILLUS. NO.
	B SERIES				
	COWL				
73/77	Vent (upper)	B500	030	6	P-11587
	INSTRUMENT PANEL				
73/77	Instrument panel	B500	030	3	P-8966
	SHEET METAL				
73/77	Sheet metal parts	B500	• S/M	11	P-5719
	E SERIES				
	COWL				
75/	Vent (side)	All	030	9	P-12883
	(upper)	All	030	6	P-12057
	DOORS and WINDOWS				
73/74	Back door handle and latch parts	All	200	5	P-6337
75/	Back door handle and latch parts	All	200	16	P-12102
75/	Back door window parts (moveable) - tempered	All	200	18	P-12062
	- laminated	All	200	21	P-12964
75/	Back door window parts (stationary)	All	200	17	P-12110
73/74	Body side step parts	All--w/hinged doors	200	3	P-6335
73/74	Body window parts-side and rear (moveable)	All	200	1	P-10479
73/74	Body window parts-side and rear (stationary)	All	200	1	P-6341
73/74	Front door handle and latch parts	All	200	3	P-6332
75/	Front door handle and latch parts	All	200	14	P-12060
77/	Front door step parts	All	200	25	P-14450
73/74	Front door window parts	All	200	2	P-6331
75/	Front door window parts	All	200	19	P-12059
77/	Port hole window	All	200	24	P-13444
75/	Quarter window front (stationary)	All	200	20	P-12691
75/	Quarter window parts (moveable)-tempered	All	200	18	P-12061
	-laminated	All	200	21	P-12963
75/	Quarter window rear (stationary)	All	200	17	P-12131
73/	Roof vent	All	200	22	P-13003
73/74	Side and back door window parts	All--w/hinged doors	200	4	P-6336
73/	Side door handle and latch parts	All--w/sliding doors	200	9	P-8748
73/74	Side door handle and latch parts	All--w/hinged doors	200	5	P-6337
75/	Side door handle and latch parts	All--w/hinged doors	200	15	P-12099
73/74	Side door track parts	All--w/sliding doors	200	8	P-8749
75/	Side door track parts	All--w/sliding doors	200	23	P-13006
73/74	Side door window parts (moveable)	All--w/sliding doors	200	7	P-8747
75/	Side door window parts (moveable) - tempered	All	200	18	P-12061
	- laminated	All	200	21	P-12963
75/	Side door window parts (stationary)	All--w/hinged doors	200	7	P-12109
75/	Side door window parts (stationary)	All--w/sliding doors	200	20	P-12691
78/	Weatherstrips - door openings	All	200	26	P-15169
	EXTERIOR MOULDINGS - Refer to Exterior Moulding Section at the end of Text Catalog				
	INSTRUMENT PANEL				
73/74	Instrument panel and pad	All	030	4	P-8998
75/	Instrument panel and pad	All	030	8	P-12156

• S/M - Sheet Metal I/T - Interior Trim

COPYRIGHT © 1980 FORD MOTOR COMPANY —DEARBORN, MICHIGAN

INDEX

YEAR 19__	TITLE	MODEL	SECTION	PAGE	ILLUS. NO.
	E SERIES - cont'd.				
	SEAT BELTS				
73/74	Seat belt installation	All	620	1	P-6311
75	Seat belt installation - driver and passenger	All	620	5	P-14259
	- 2nd and 3rd seat	All	620	6	P-14260
	- 4th seat	All	620	6	P-14261
76/	Seat belt installation - driver and passenger	All	620	5	P-14262
	- 2nd and 3rd seat	All	620	9	P-14263
	- 4th and 5th seat	All	620	9	P-14264
79	Seat belt installation - 2nd row captains chair	All	620	10	P-15162
	SEATS				
75/	Front seat parts - captains chair - upper half - Bostrom	All	600	16	P-14408
	- Hoover	All	600	17	P-16325
73/74	- non folding	All	600	3	P-6309
75/	- lower half-Bostrom	E100/350	600	4	P-12393
78/	- lower half-Lear Siegler	E100/350	600	13	P-14409
75/	- non-folding--moveable	All	600	6	P-12692
73/74	- passenger folding	E100/300 (89)	600	3	P-6308
75/	- passenger folding	E100/350	600	11	P-12038
75/	- passenger non-folding--stationary	All	600	6	P-12693
79	Front seat mechanism & related parts - upper half	E100/350	600	16	P-15056
73/	Rear seat parts - w/armrest	E100/350 (82)	600	2	P-12956
	- w/o armrest - 4th seat	E100/350 (82)	600	2	P-12957
78/	Rear seat parts - w/o armrest - 5th seat	E100/350 (82)	600	12	P-13108
78/	- quick disconnect	E100/350	600	12	P-14537
79	- captains chair - 2nd row - lower half - Bostrom	All	600	15	P-14985
79	- bed seat	All	600	14	P-15064
	SHEET METAL				
73/74	Front upper body	All	•S/M	1	P-6278
73/74	Lower body	All--105" W/B	•S/M	6	P-8779
73/74	Lower body	All--123" W/B	•S/M	7	P-8780
75/	Lower body	E100/350	•S/M	17	P-12031
73/74	Rear upper body-L.H.	All--105" W/B	•S/M	3	P-6280
73/74	Rear upper body-L.H.	All--123" W/B	•S/M	5	P-6351
73/74	Rear upper body-R.H.	All--105" W/B-w/hinged doors	•S/M	2	P-6279
73/74	Rear upper body-R.H.	All--123" W/B-w/hinged doors	•S/M	4	P-6281
73/74	Upper body	E300 (Cutaway Cab)	•S/M	9	P-8942
75/	Upper body	E250/350(Cutaway Cab)	•S/M	18	P-12037
75/	Upper body	All--w/hinged doors	•S/M	20	P-13042
73/74	Upper body-R.H.	All--w/sliding doors	•S/M	8	P-8781
75/	Upper body	All--w/sliding door	•S/M	19	P-13043
78/	Lower body	E100/350 (Super Van/Wagon)	•S/M	21	P-13005
78/	Upper body	E100/350 (Super Van/Wagon)-w/hinged doors	•S/M	22	P-13045
78/	Upper body	E100/350 (Super Van/Wagon)-w/sliding door	•S/M	23	P-13044
	TRIM				
73/74	Engine cover	All	•I/T	1	P-6340
75/	Engine cover	All	030	7	P-12056
75/	Interior trim (floor insulators)	All	•I/T	13	P-12855
73/	Interior insulation	All--A/C	•I/T	7	P-8193
73/74	Interior trim (floor)	All	•I/T	1	P-6340
75/	Interior trim (floor carpets)	All	•I/T	11	P-12113
75/	Interior trim (floor mats)	All	•I/T	11	P-12112

INDEX

YEAR 19__	TITLE	MODEL	SECTION	PAGE	ILLUS. NO.
	E SERIES - cont'd.				
	TRIM - cont'd.				
75/	Interior trim garnish mouldings and related parts				
	- w/windows-R.H.	All-exc. (Super wagon)	•I/T	19	P-14313
	-L.H.	All-exc. (Super wagon)	•I/T	20	P-15062
	- w/o windows-R.H.	All-exc. (Super wagon)	•I/T	19	P-14312
	-L.H.	All-exc. (Super wagon)	•I/T	20	P-15061
78/	Interior trim garnish mouldings and related parts				
	- w/windows-R.H.	E100/350 (Super wagon)	•I/T	18	P-14320
	-L.H.	E100/350 (Super wagon)	•I/T	21	P-15063
	- w/o windows-R.H.	E100/350 (Super wagon)	•I/T	19	P-14312
	-L.H.	E100/350 (Super wagon)	•I/T	20	P-15061
73/74	Interior trim (L. H.)	All--w/o body side windows	•I/T	4	P-8553
75/	Interior trim panels (L.H.)	All--w/o body side windows	•I/T	16	P-12384
73/74	Interior trim (L. H.)	All--w/body side windows	•I/T	6	P-9093
75/	Interior trim panels (L.H.)	All--w/body side windows	•I/T	14	P-12382
73/74	Interior trim (R. H.)	All--w/o body side windows	•I/T	4	P-8552
75/	Interior trim panels (R.H.)	All--w/o body side windows	•I/T	17	P-12385
73/74	Interior trim (R. H.)	All--w/body side windows	•I/T	5	P-9092
75/	Interior trim panels (R.H.)	All--w/body side windows	•I/T	15	P-12383
73/74	Interior trim (roof)	All	•I/T	2	P-6944
75/	Interior trim (headlining)	All	•I/T	12	P-12380
75/	Interior trim (roof panels)	All	•I/T	13	P-12381
75/77	Luggage carrier	All	400	11	P-13387
75/	Roof rail kit (sport)	All	400	13	P-14431
73/74	Rub rail parts	All	•I/T	3	P-6943
75/	Rub rail parts (L.H.)	All--w/o body side windows	•I/T	16	P-12384
	(R.H.)		•I/T	17	P-12385
75/	Spare tire cover	All	•I/T	12	P-12140
79	Utility table	All	200	25	P-15029
	WINDSHIELD				
73/	Rear view mirror and sun visor	All	030	9	P-13023
73/74	Windshield parts	All	030	1	P-6285
75/	Windshield parts	All	030	6	P-12057
	F SERIES				
	BACK-OF-CAB EQUIPMENT				
73/76	Camper tie down parts	F250/350	400	8	P-10406
77/	Fuel filler cover	F100/350	400	11	P-13256
77/	Fuel filler door	F100/350	400	10	P-13254
73/	Liftgate (pickup box cover)	F100/350(99)--8' box	400	5	P-10194
73/	Pickup box cover (sliding windows)	F100/350(99)--8' box	400	2	P-10196
73/	Pickup box cover (stationary windows)	F100/350(99)--8' box	400	3	P-10195
78/	Pickup box cover kit (reinforcement)	F100/350 (99)	400	12	P-14326

• S/M - Sheet Metal I/T - Interior trim

COPYRIGHT © 1979 FORD MOTOR COMPANY — DEARBORN, MICHIGAN

INDEX

YEAR	TITLE	MODEL	SECTION	PAGE	ILLUS. NO.
	F SERIES -cont'd.				
	BACK-OF-CAB EQUIPMENT - cont'd.				
73/	Pickup box side rails-bolt-on type	F100/250(99)--8' box	200	9	P-6941
73/	Pickup box side rails-stake mounted	F100(99)--6 3/4' box	200	11	P-10743
73/	Pickup box side rails-stake mounted	F100/250(99)--8' box	200	11	P-10744
73/74	Platform and rack parts	F350	400	9	P-9087
75/	Platform parts	F350	400	15	P-14991
75/	Rack parts	F350	400	14	P-14987
78/	Roll bar	F100/350 (99)	400	12	P-14093
73/	Sliding window parts (pickup box cover side)	F100/350(99)--8' box	400	5	P-10193
73/	Sliding window parts (pickup box cover front)	F100/350 (99)--8' box	400	6	P-7310
73/	Spare wheel cover	F350(99)	400	7	P-10265
76/	Splash shield (rear)	F100/350	400	10	P-13219
73/	Tailgate, hinge and latch parts	F100/250(83)	•S/M	12	P-4847
73/	Tailgate, hinge and latch parts	F100/350(99)	400	4	P-10063
73/	Tie down hooks	F100/350	400	1	P-10449
73/	Tonneau cover parts	F100/350(99)--8' box	400	1	P-8334
	COWL				
73/	Vent (upper)	F350(84)	030	6	P-11587
	(side)	F100/350	030	7	P-12884
	DOORS and WINDOWS				
73/	Back window parts (sliding)	F100/500	400	6	P-7310
73/	Back window parts (stationary)	F100/500	400	6	P-10230
73/	Body side step parts	F100/350	200	22	P-13002
73/77	Front door handle and latch parts	F100/500	200	10	P-10231
73/77	Front door window parts	F100/500	200	6	P-10562
78/	Front door handle and latch parts	F100/350	200	10	P-10231
78/	Front door window parts	F100/350	200	6	P-10562
74/	Quarter window - moveable	F100/350(Super Cab)	200	13	P-11475
74/77	Quarter window-stationary	F100/350(Super Cab)	200	13	P-11474
77/	Quarter window-stationary	F100/350(Super Cab)	200	24	P-14096
73/77	Rear door handle and latch parts	F250/500(Crew Cab)	200	20	P-12952
73/77	Rear door window parts	F250/500(Crew Cab)	200	12	P-11158
78/	Rear door handle and latch parts	F250/350(Crew Cab)	200	20	P-12952
78/	Rear door window parts	F250/350	200	12	P-11158
	EXTERIOR MOULDINGS - Refer to Exterior Moulding Section at the end of Text Catalog				
	INSTRUMENT PANEL				
73/	Glove compartment parts (hang on A/C)	F100/250	030	3	P-10768
73/77	Instrument panel	F350/500(84)	030	3	P-8966
73/	Instrument panel and pad	F100/350	030	2	P-10224
73/77	Instrument panel and pad	F500(81)	030	5	P-7137
78/	Instrument panel	F350(84)	030	3	P-8966
	SEAT BELTS				
	Seat belt installation				
73/75	Front - w/shoulder harness	F100/500	620	2	P-9251
76 77	- w/shoulder harness	F100/500	620	7	P-12753
74/75	- w/shoulder harness	F250/500 (Crew Cab)	620	3	P-12861
76 77	- w/shoulder harness	F250/500 (Crew Cab)	620	4	P-12859
77/	- w/shoulder harness	F100/350	620	8	P-14092
78/	- w/shoulder harness	F250/350(Crew Cab)	620	4	P-12859
76	- w/shoulder harness	F100/350 (Super Cab)	620	7	P-12856
73/74	- w/o shoulder harness	F250/500 (Crew Cab)	620	3	P-12862
76/79	- w/shoulder harness	F100/350 (Super Cab)	620	8	P-12914
74/75	- w/o shoulder harness	F250/500 (Crew Cab)	620	4	P-12860
73/74	Rear - w/o shoulder harness	F250/500 (Crew Cab)	620	3	P-12862
74/75	- w/o shoulder harness	F250/500 (Crew Cab)	620	4	P-12860
76 77	- w/o shoulder harness	F250/500 (Crew Cab)	620	4	P-12859
78/	- w/o shoulder harness	F250/350(Crew Cab)	620	4	P-12859

• S/M - Sheet Metal I/T - Interior Trim

INDEX

YEAR 19__	TITLE	MODEL	SECTION	PAGE	ILLUS. NO.
	F SERIES - cont'd.				
	SEATS				
73/77	Front seat parts - Bostrom	F500	600	1	P-3454
73/77	- full width - folding - upper half	F100/500	600	5	P-12951
73/77	- full width - non-folding - upper half	F100/500	600	5	P-12950
73/77	- full width - lower half	F100/500	600	9	P-12949
78/	- full width - folding-upper half	F100/350	600	5	P-12951
78/	- full width-non-folding-upper half	F100/350	600	5	P-12950
78/	- full width - lower half	F100/350	600	12	P-12949
74/	- full width - upper half	F100/350 (Super Cab)	600	9	P-11472
73/77	Rear seat parts - full width	F250/500 (Crew Cab)	600	7	P-11156
78/	- full width	F250/350(Crew Cab)	600	7	P-11156
74/	- center facing	F100/350 (Super Cab)	600	8	P-11473
74/	- forward facing	F100/350 (Super Cab)	600	10	P-11531
	SHEET METAL				
73/	Pickup box parts	F100/250(83)	•S/M	12	P-4847
73/	Pickup box parts	F100/350(99)	•S/M	13	P-10227
73/77	Sheet metal parts	F100/500(81) (Regular Cab)	•S/M	10	P-10226
78/	Sheet metal parts	F100/350(81)	•S/M	10	P-10226
73/77	Sheet metal parts	F350/500(84)	•S/M	11	P-5719
78/	Sheet metal parts	F350 (84)	•S/M	11	P-5719
73/77	Sheet metal parts - lower body	F250/500(Crew Cab)	•S/M	14	P-11154
	- upper body	F250/500(Crew Cab)	•S/M	15	P-11155
78/	Sheet metal parts - lower body	F250/350(Crew Cab)	•S/M	14	P-11154
	- upper body	F250/350(Crew Cab)	•S/M	15	P-11155
74/	Sheet metal parts - lower body	F100/350(Super Cab)	•S/M	16	P-11476
	- upper body	F100/350(Super Cab)	•S/M	16	P-11476
	STORAGE COMPARTMENT				
73/	Tool storage compartment	F100/350(99)	400	7	P-10264
	TRIM				
75/	Dash and floor insulator	F100/350	•I/T	18	P-13220
73/77	Interior trim	F100/500 (Regular Cab)	•I/T	8	P-10266
78/	Interior trim	F100/350(Regular Cab)	•I/T	8	P-10266
73/77	Interior trim	F250/500 (Crew Cab)	•I/T	9	P-11160
78/	Interior trim	F250/350(Crew Cab)	•I/T	9	P-11160
74/	Interior trim	F100/350(Super Cab)	•I/T	10	P-11530
	WINDSHIELD				
73/	Rear view mirror and sun visor	F100/350	030	9	P-13023
73/77	Windshield parts - "Before Ser. 040,001"	F100/500(81)	030	1	P-10229
77	Windshield parts - "From Ser. 040,001"	F500(81)	030	10	P-13064
77/	Windshield parts - "From Ser. 040,001"	F100/350	030	10	P-13064

• S/M - Sheet Metal I/T - Interior Trim

COPYRIGHT © 1979 FORD MOTOR COMPANY — DEARBORN, MICHIGAN

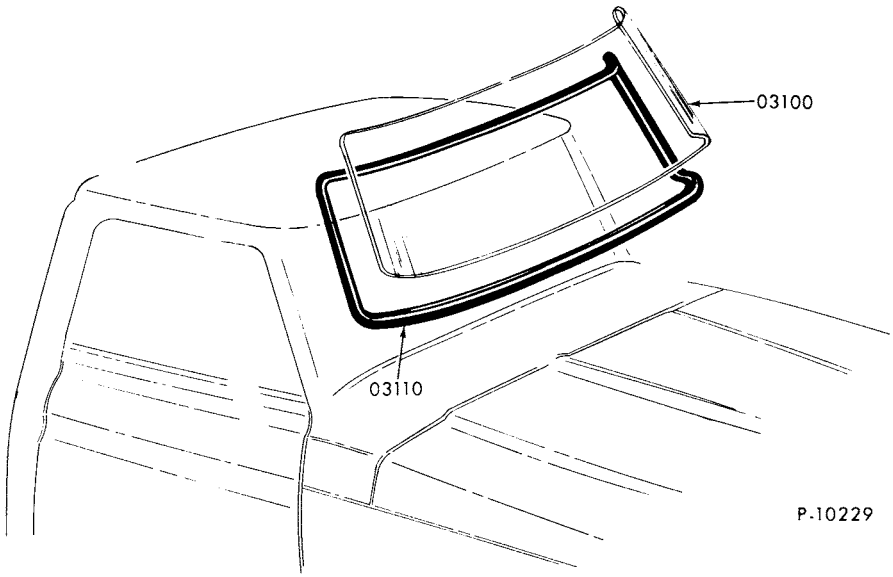

WINDSHIELD PARTS

1973/77 F100/500-BODY TYPE 81 - "BEFORE SER. 040,001"

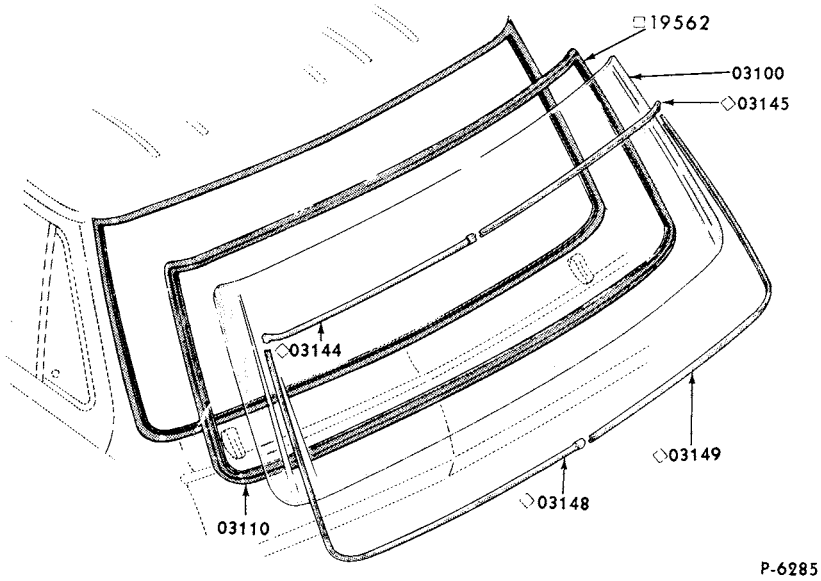

□ REFER TO PAINT SECTION
◇ REFER TO GROUP IN EXTERIOR MOULDING SECTION FOR DETAILS

WINDSHIELD PARTS

1973/74 E100/300

COPYRIGHT © 1979 FORD MOTOR COMPANY, DEARBORN, MICHIGAN

1973/79 TRUCK SERIES 100/500

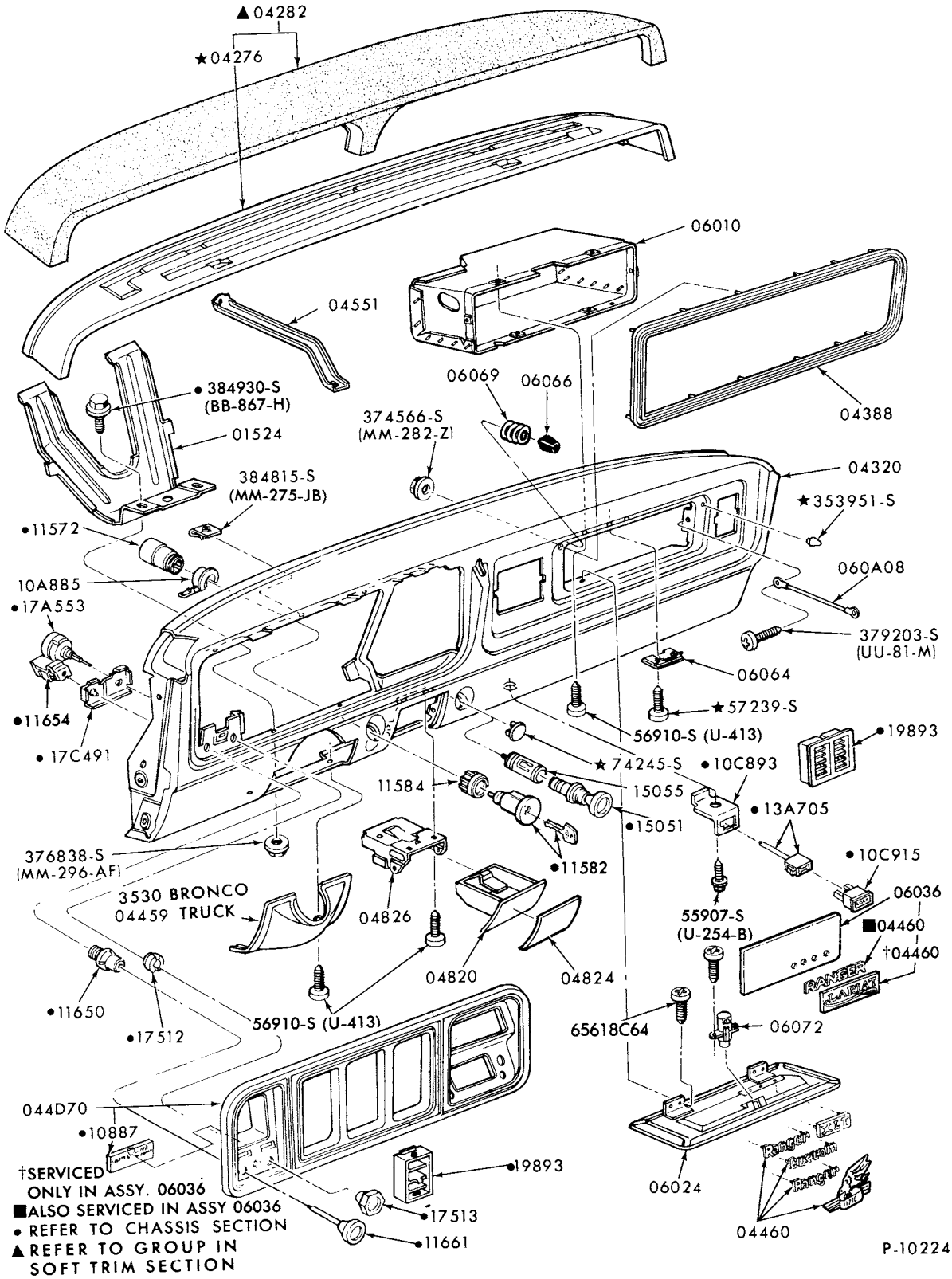

INSTRUMENT PANEL, PAD and RELATED PARTS
1973/ F100/350 (81)

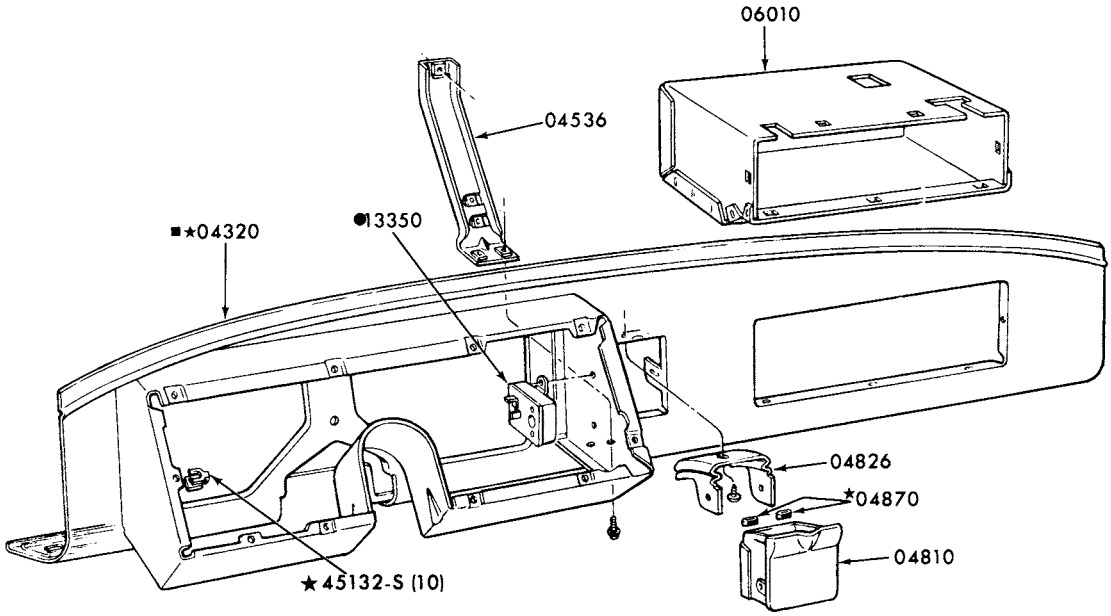

■ SERVICED ONLY IN ASSY.—GROUP 00120
● REFER TO GROUP IN CHASSIS SECTION

P-8966

INSTRUMENT PANEL and RELATED PARTS
1973/77 B-F350/500-BODY TYPE 84 and 1978 F350-BODY TYPE 84

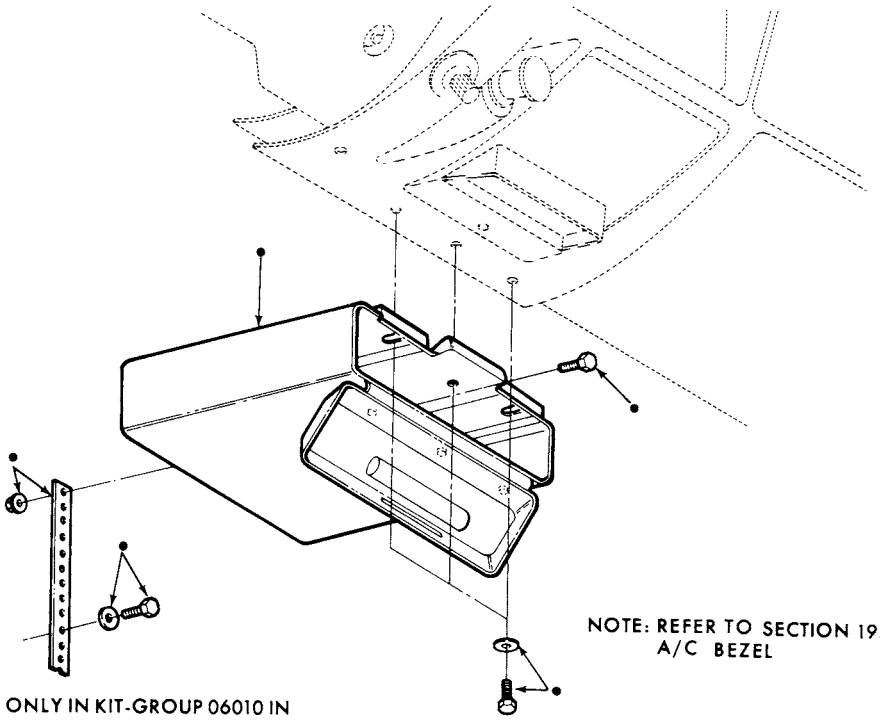

NOTE: REFER TO SECTION 195 FOR A/C BEZEL

• SERVICED ONLY IN KIT-GROUP 06010 IN ACCESSORIES SECTION

P-10768

GLOVE COMPARTMENT PARTS
1973/ F100/250--HANG ON A/C

COPYRIGHT © 1979 FORD MOTOR COMPANY DEARBORN, MICHIGAN

1973/79
TRUCK SERIES 100/500

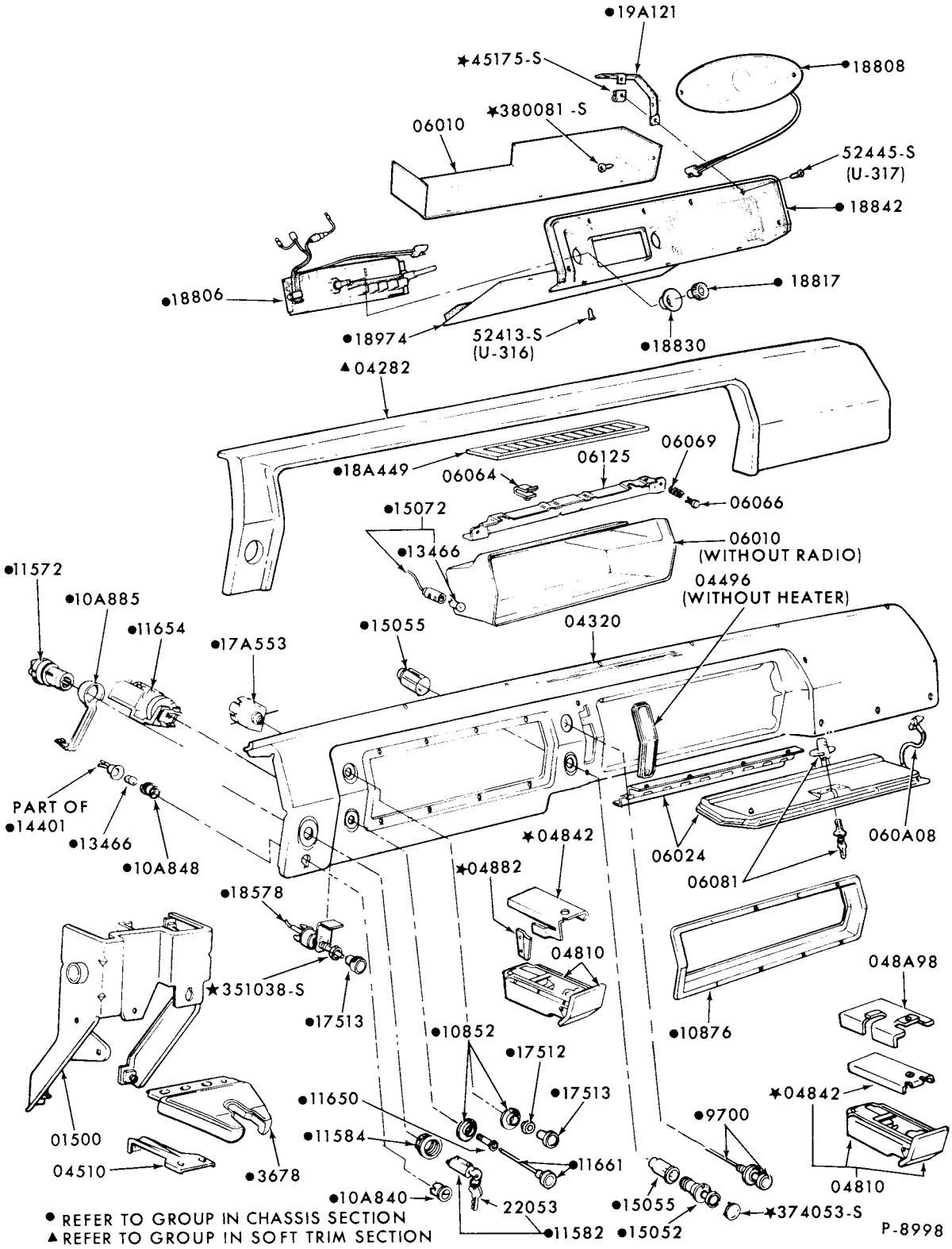

• REFER TO GROUP IN CHASSIS SECTION
▲ REFER TO GROUP IN SOFT TRIM SECTION

INSTRUMENT PANEL, PAD and RELATED PARTS
1973/74 E100/300

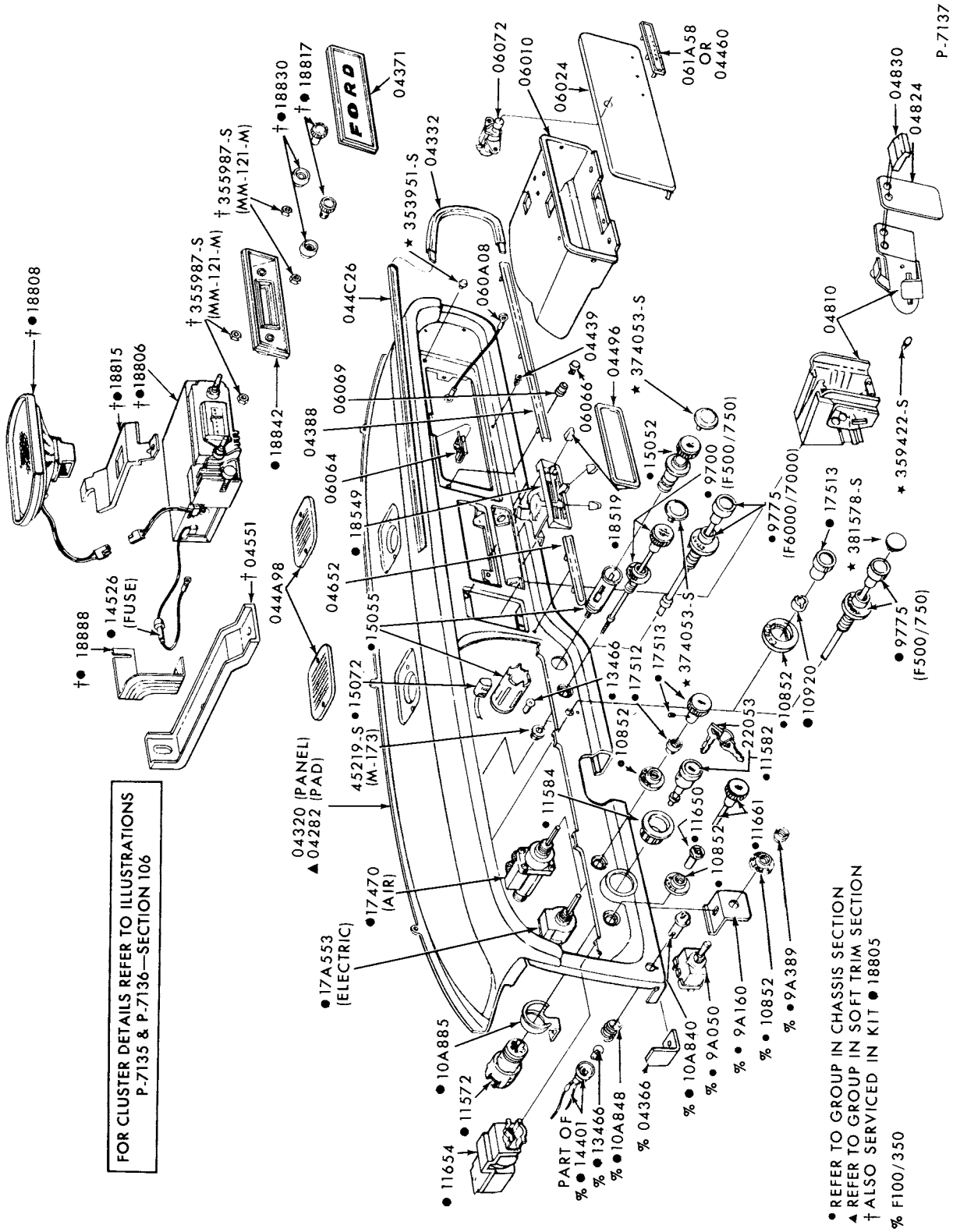

INSTRUMENT PANEL, PAD and RELATED PARTS
1973/77 F500-BODY TYPE 81

COPYRIGHT © 1979 - FORD MOTOR COMPANY - DEARBORN, MICHIGAN

1973/79
TRUCK SERIES 100/500

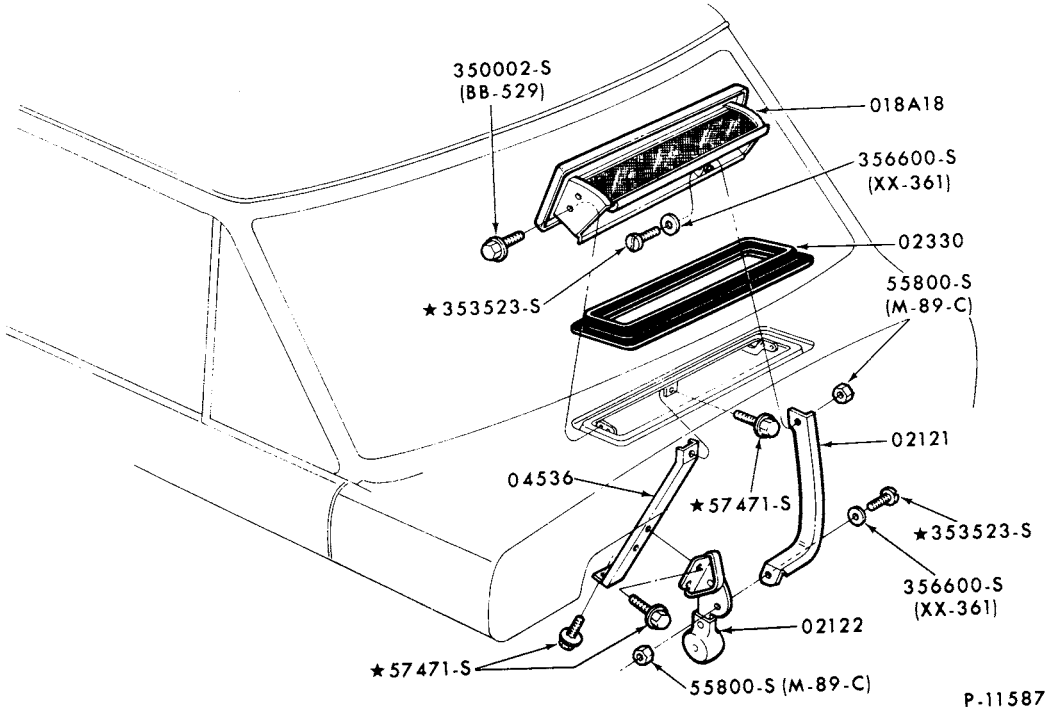

COWL VENT
1973/77 B500 and 1973/ F350-BODY TYPE 84

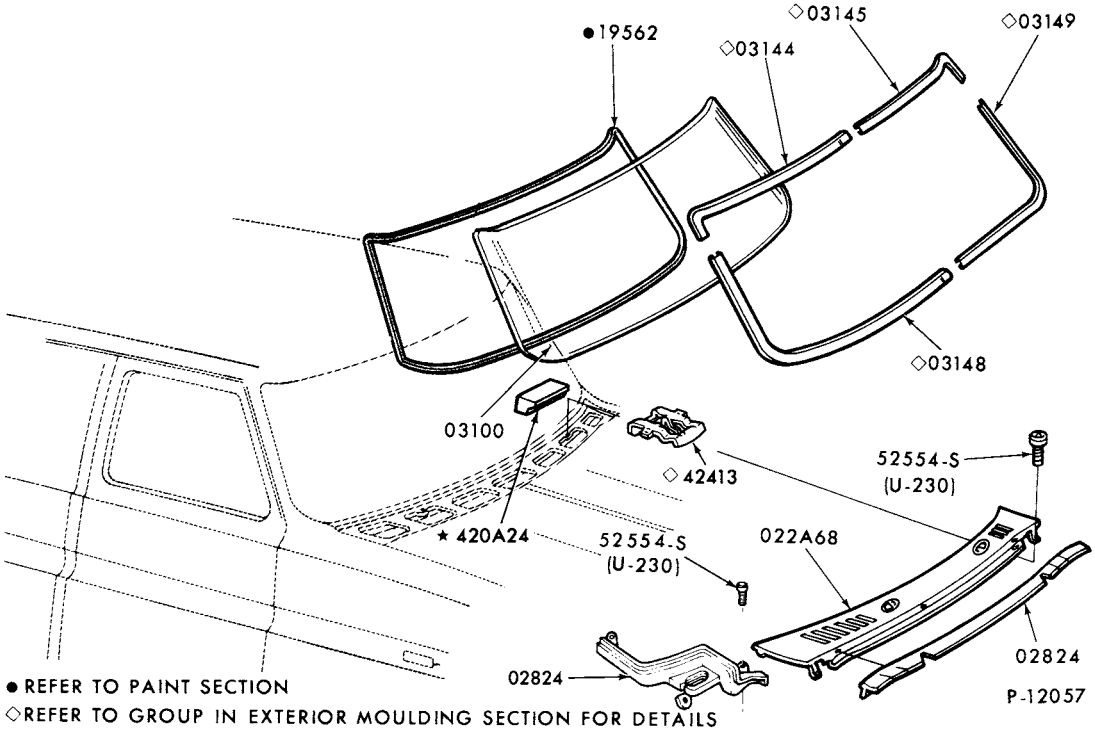

WINDSHIELD PARTS
1975/ E100/350

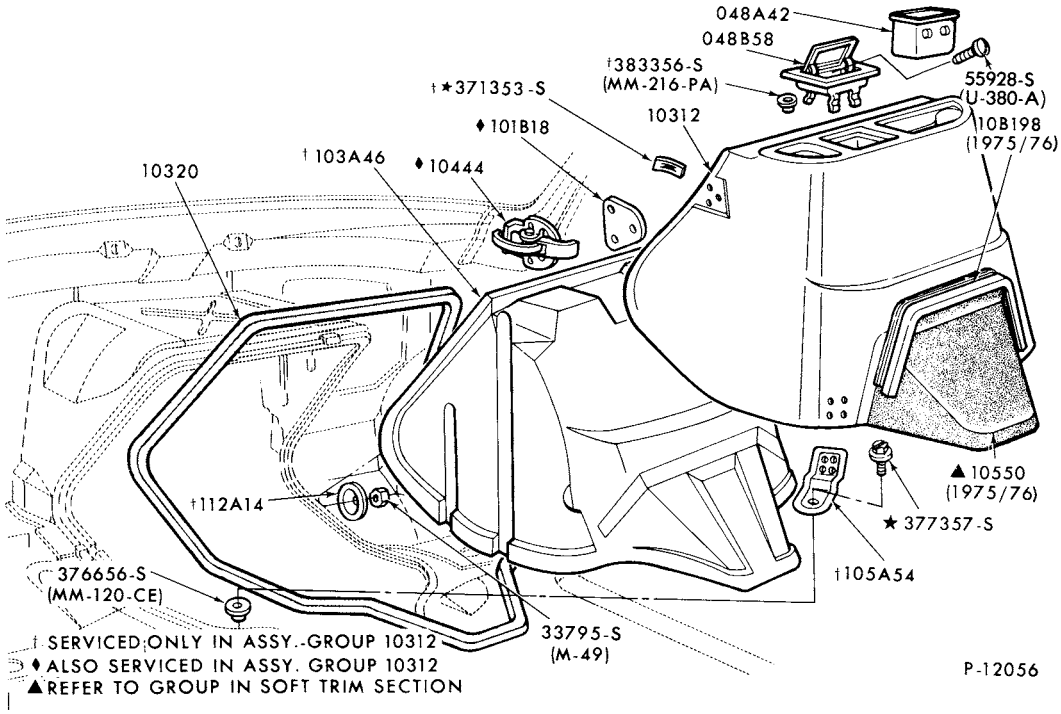

ENGINE COVER PARTS
1975/ E100/350

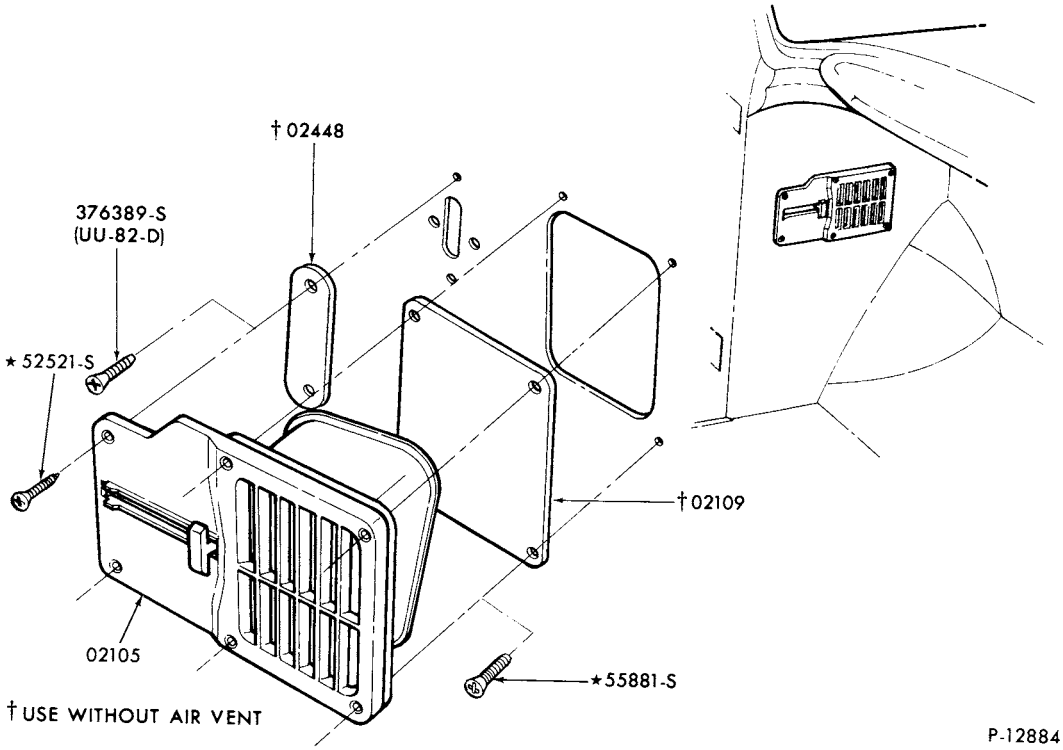

AIR VENTS and RELATED PARTS
1973/ F100/350

COPYRIGHT © 1979 FORD MOTOR COMPANY DEARBORN, MICHIGAN

1973/79
TRUCK SERIES 100/500

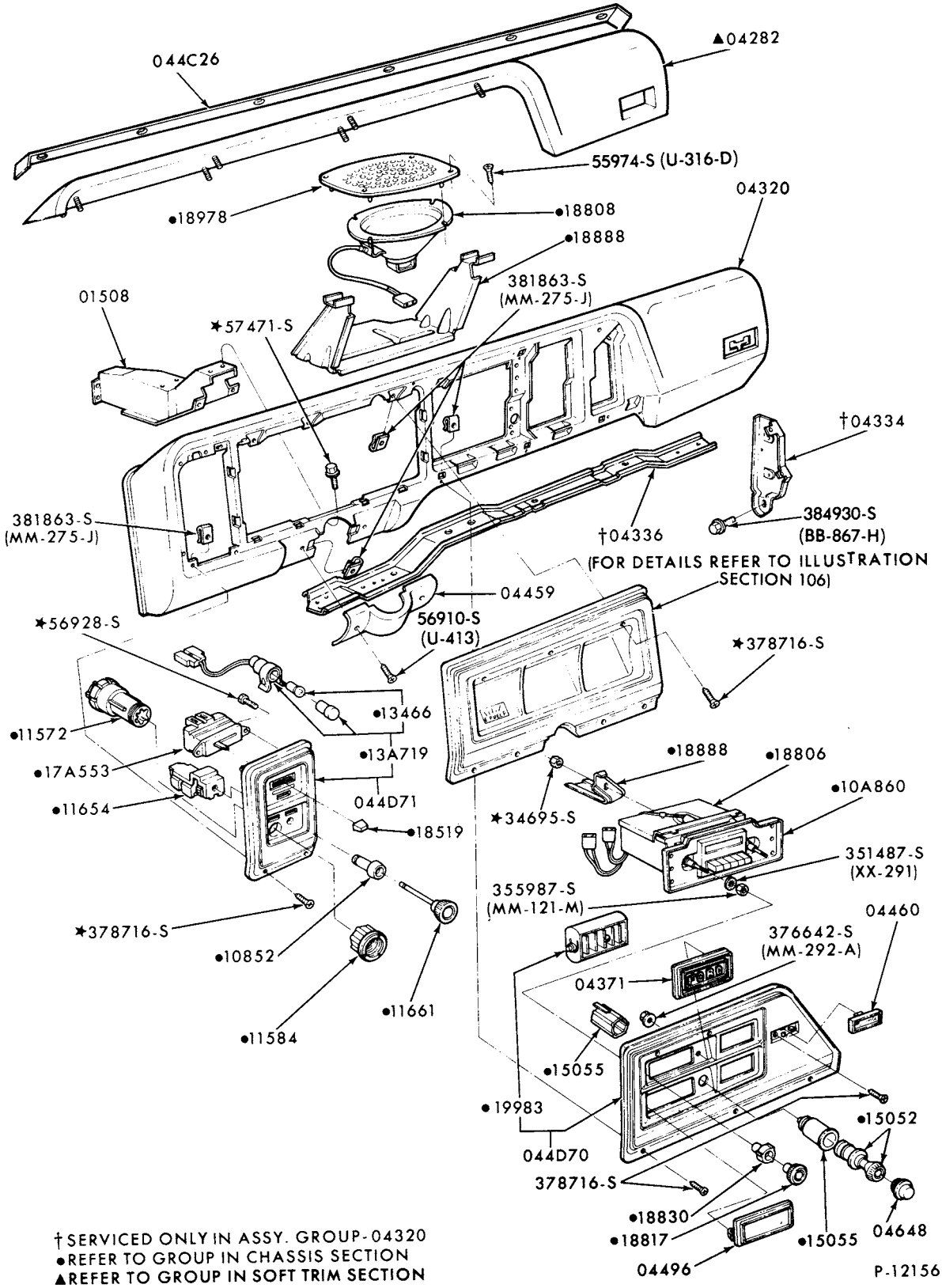

† SERVICED ONLY IN ASSY. GROUP-04320
• REFER TO GROUP IN CHASSIS SECTION
▲ REFER TO GROUP IN SOFT TRIM SECTION

INSTRUMENT PANEL, PAD and RELATED PARTS
1975/ E100/350

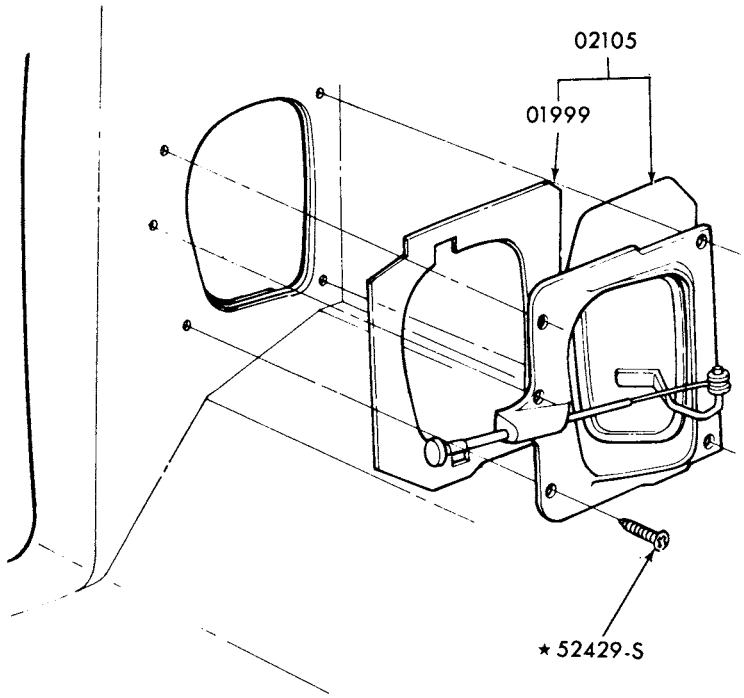

AIR VENTS and RELATED PARTS
1975/ E100/350

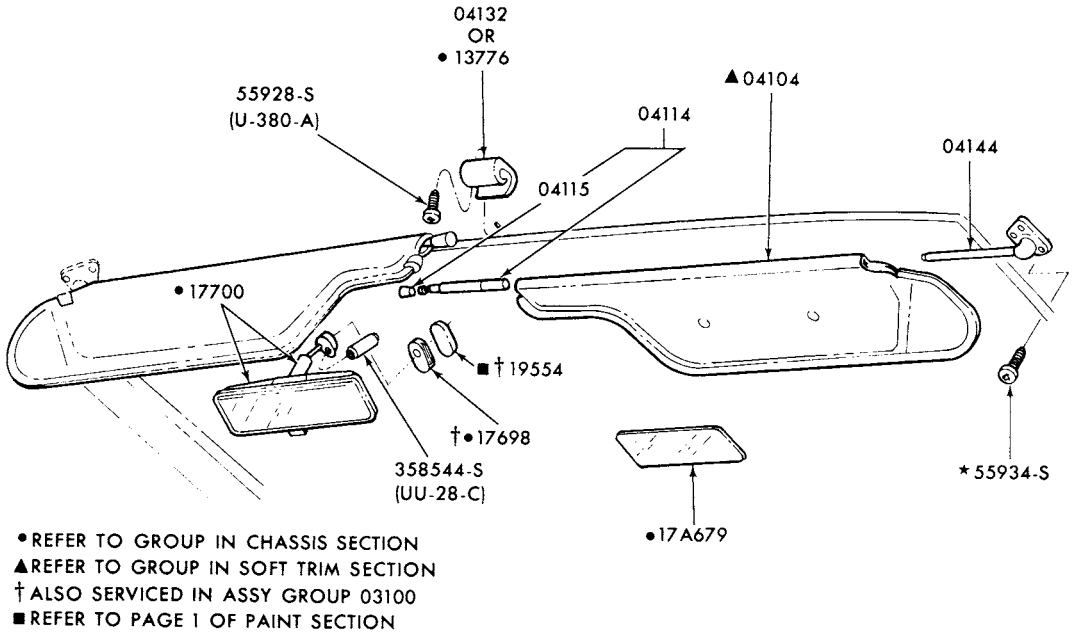

SUN VISOR, VANITY MIRROR and REAR VIEW MIRROR-TYPICAL
1973/ E100/350 and F100/350

COPYRIGHT © 1979 FORD MOTOR COMPANY—DEARBORN, MICHIGAN

1973/79
TRUCK SERIES 100/500

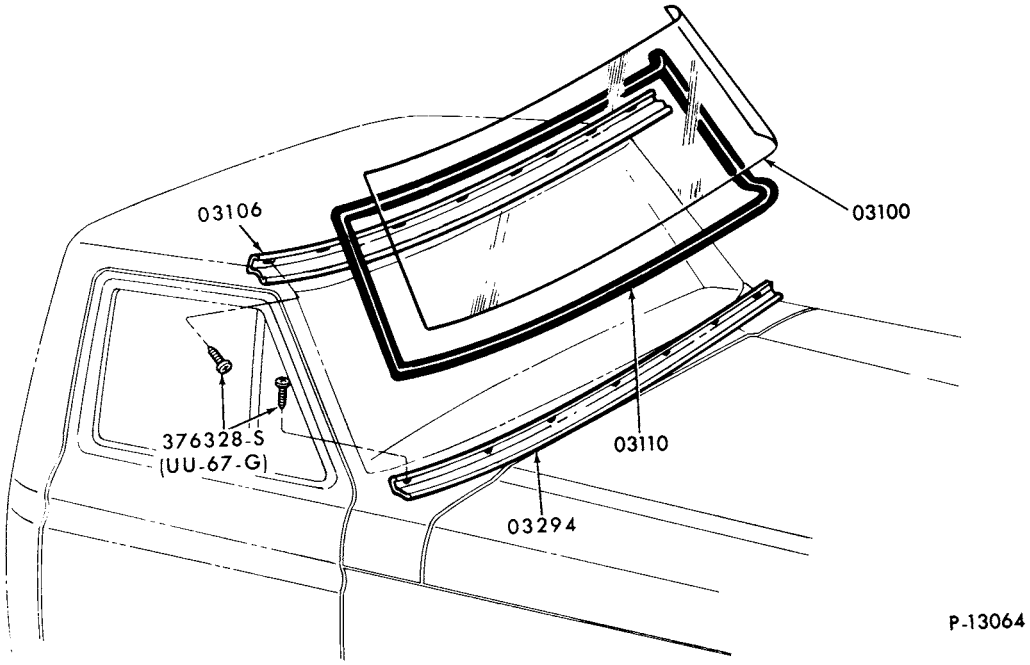

WINDSHIELD PARTS
1977 F100/500-BODY TYPE 81 - "FROM SER. 040,001"
1978/ F100/350-BODY TYPE 81

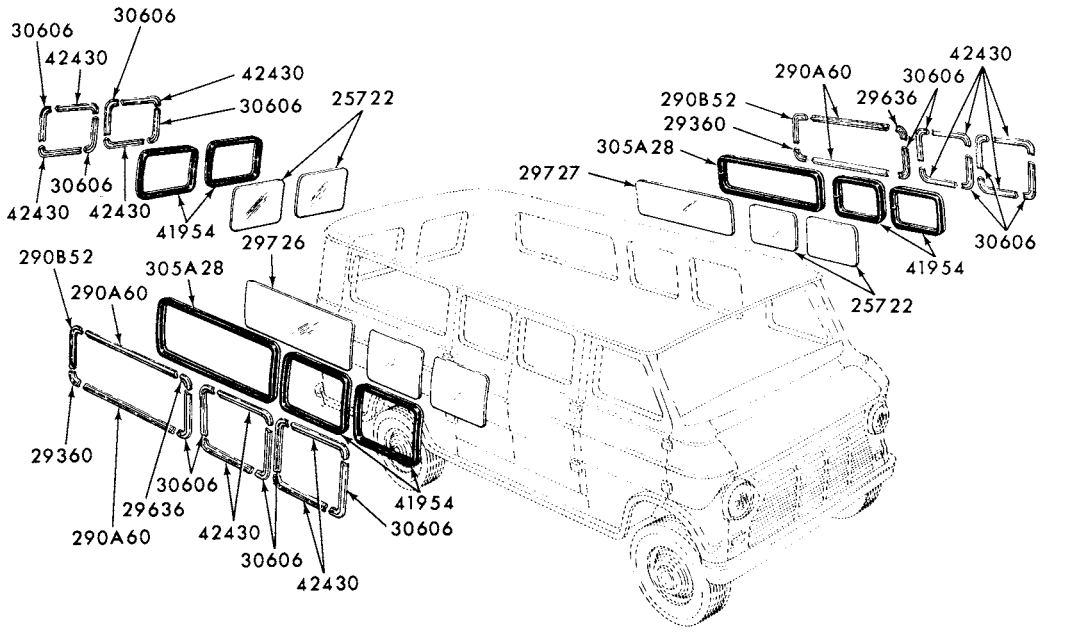

WINDOW PARTS - BODY SIDE and REAR-STATIONARY
1973/74 E100/300

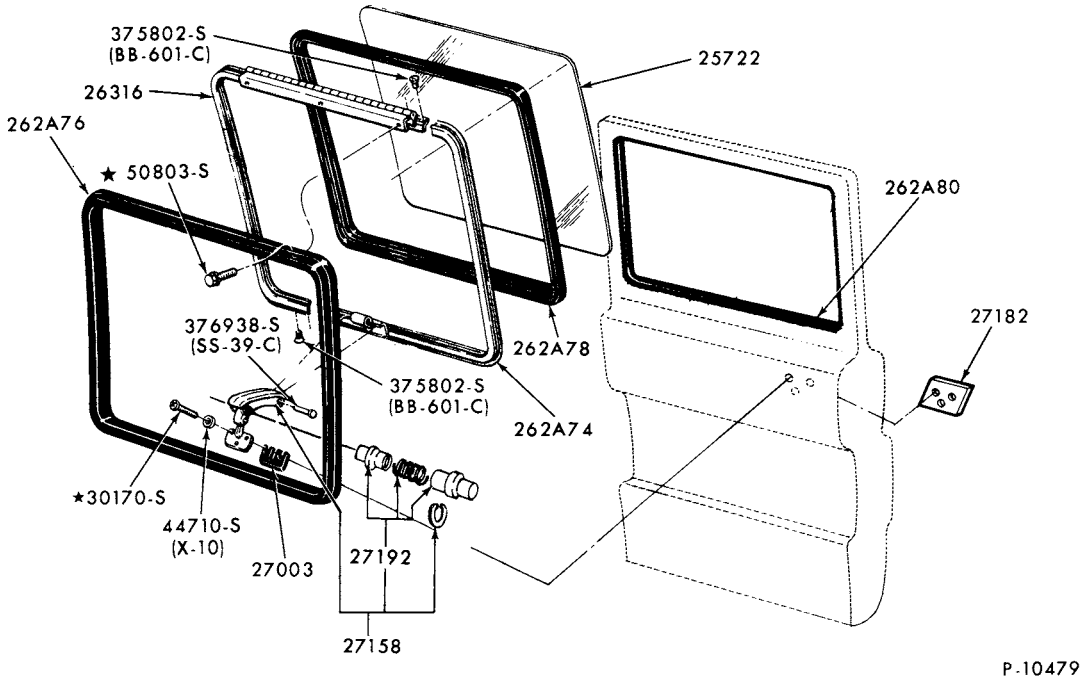

WINDOW PARTS - BODY SIDE and REAR-MOVEABLE
1973/74 E100/300

COPYRIGHT © 1979 FORD MOTOR COMPANY, DEARBORN, MICHIGAN

1973/79 TRUCK SERIES 100/500

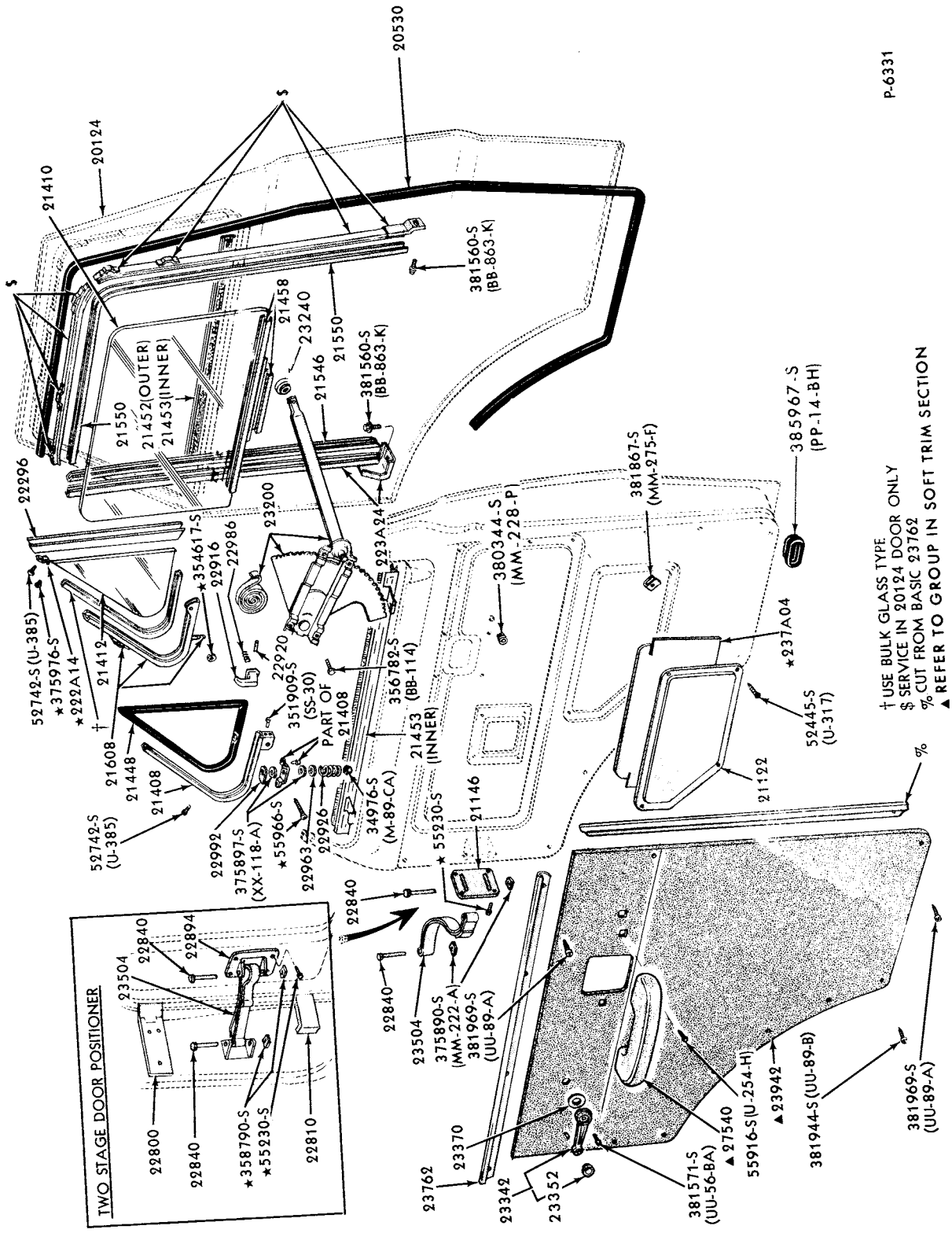

FRONT DOOR WINDOW PARTS
1973/74 E100/300

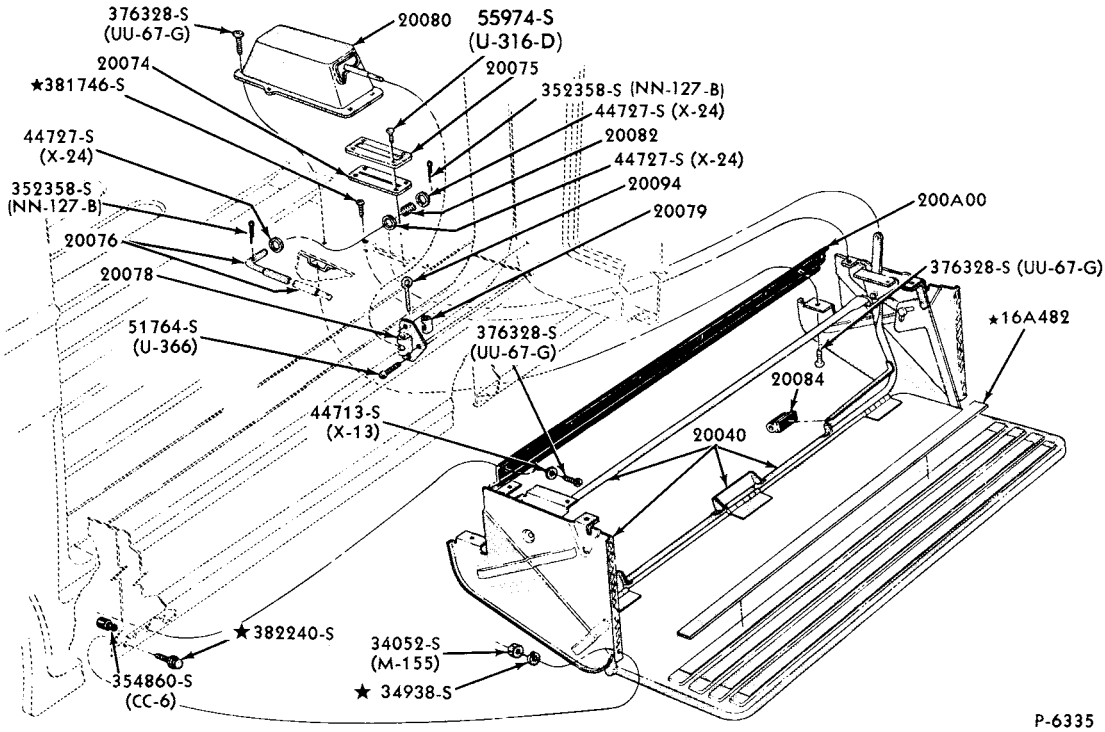

BODY SIDE STEP PARTS
1973/74 E100/350--w/HINGED DOORS

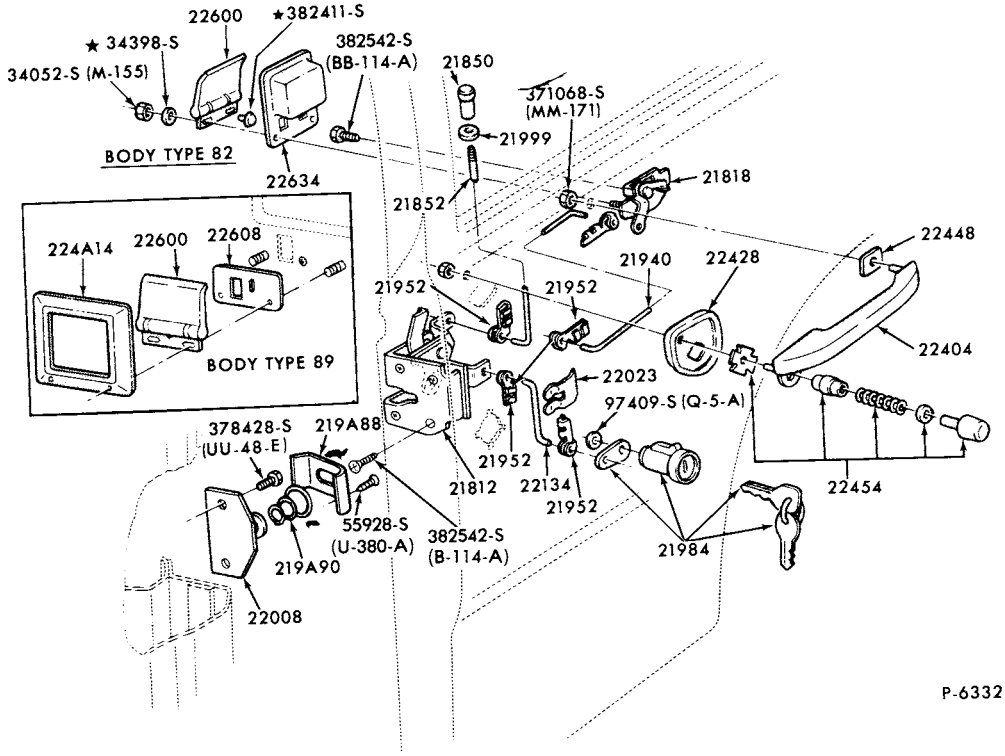

FRONT DOOR HANDLE and LATCH PARTS
1973/74 E100/300

COPYRIGHT © 1979 FORD MOTOR COMPANY DEARBORN, MICHIGAN

1973/79 TRUCK SERIES 100/500

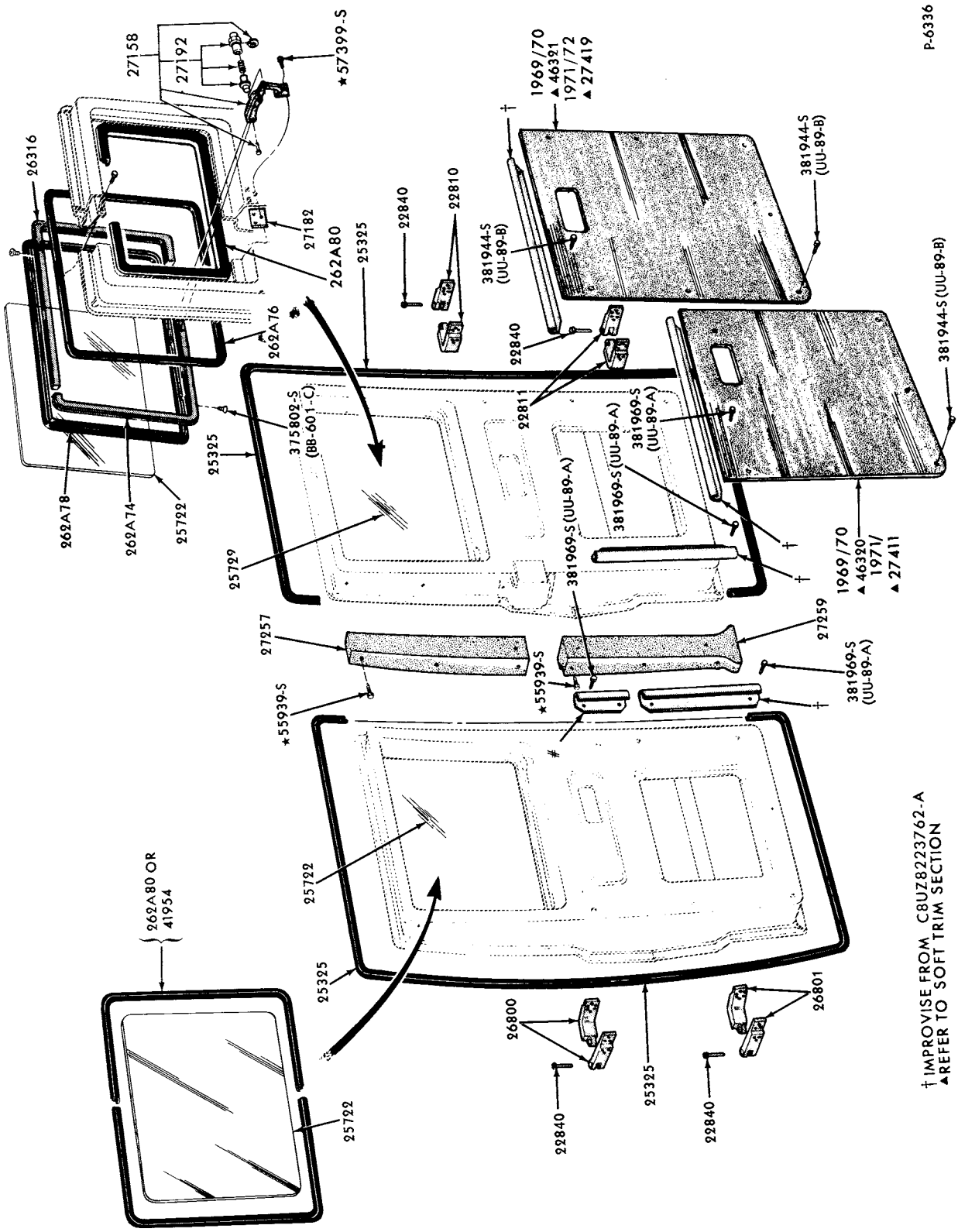

SIDE and BACK DOOR WINDOW PARTS
1973/74 E100/300--w/HINGED DOORS

P-6337

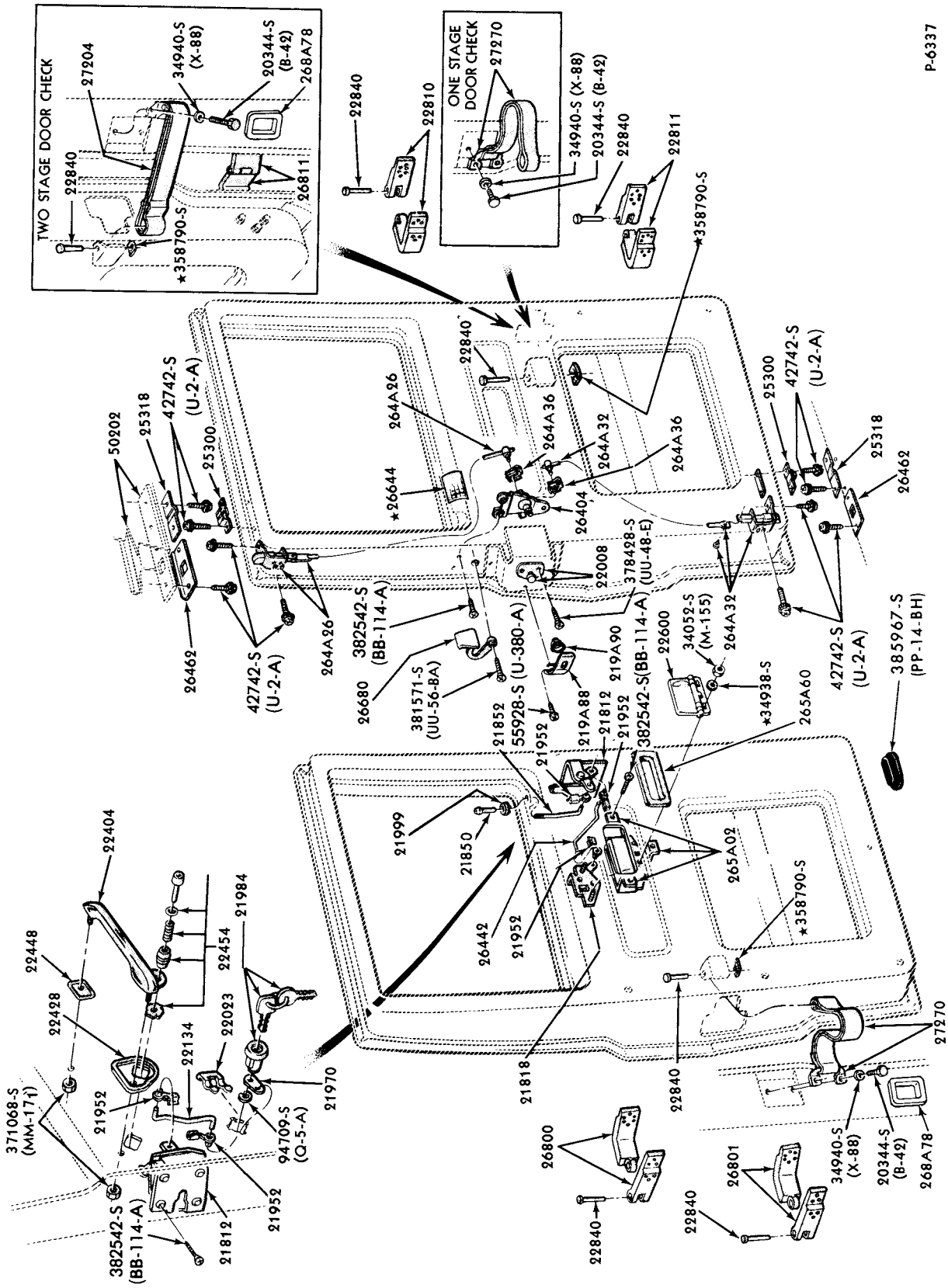

BODY SIDE and BACK DOOR HANDLE and LATCH PARTS
1973/74 E100/300--w/HINGED DOORS

COPYRIGHT © 1979 FORD MOTOR COMPANY DEARBORN, MICHIGAN

1973/79 TRUCK SERIES 100/500

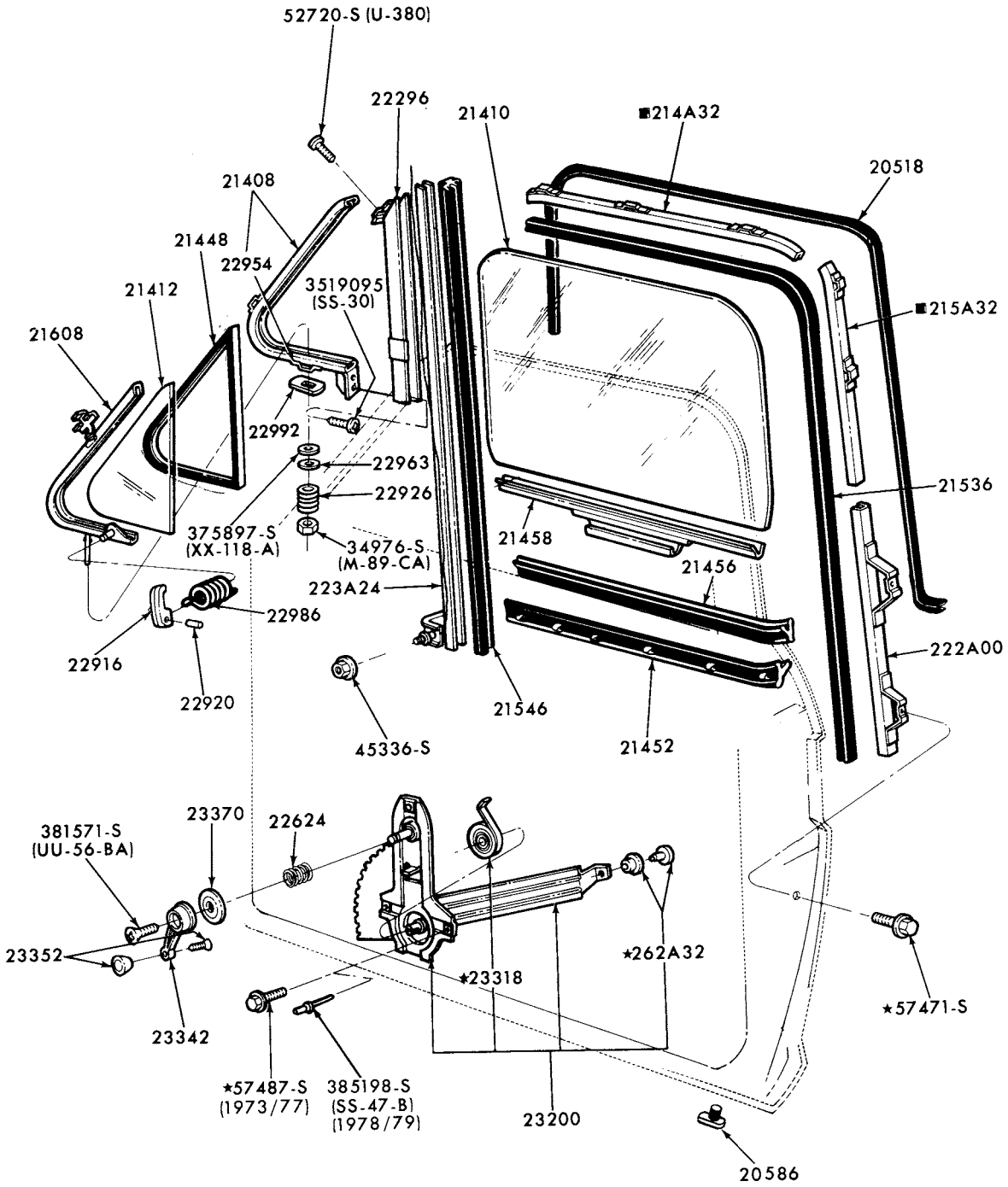

■ SERVICED ONLY IN ASSY.—GROUP 20124-5

P-10562

FRONT DOOR WINDOW PARTS
1973/77 F100/500 1978/79 F100/350

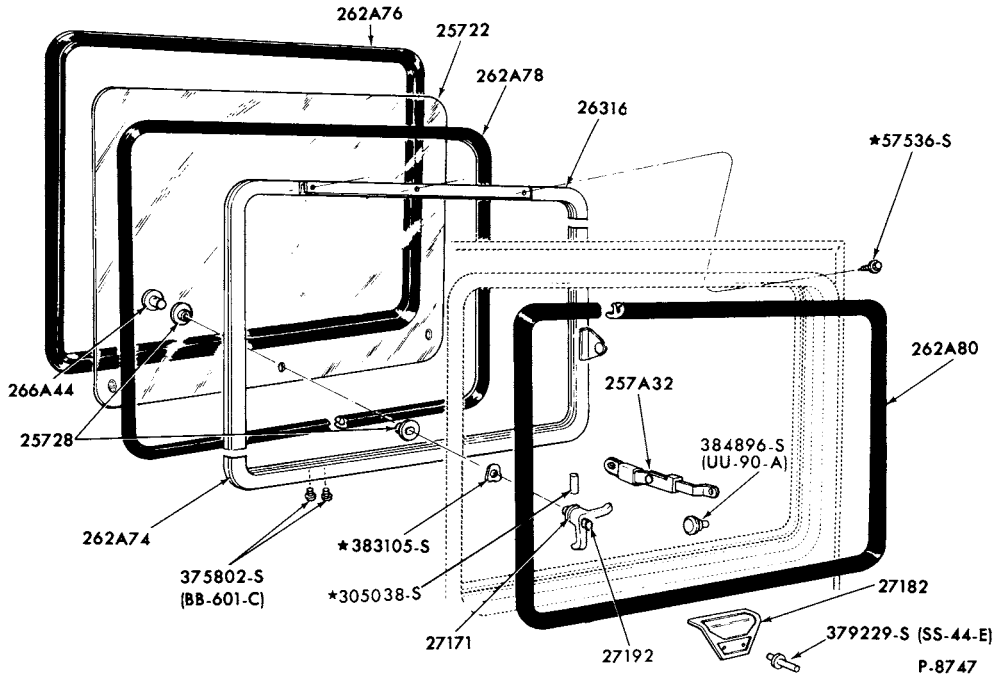

SIDE DOOR WINDOW PARTS (MOVEABLE)
1973/74 E100/300--w/SLIDING DOORS

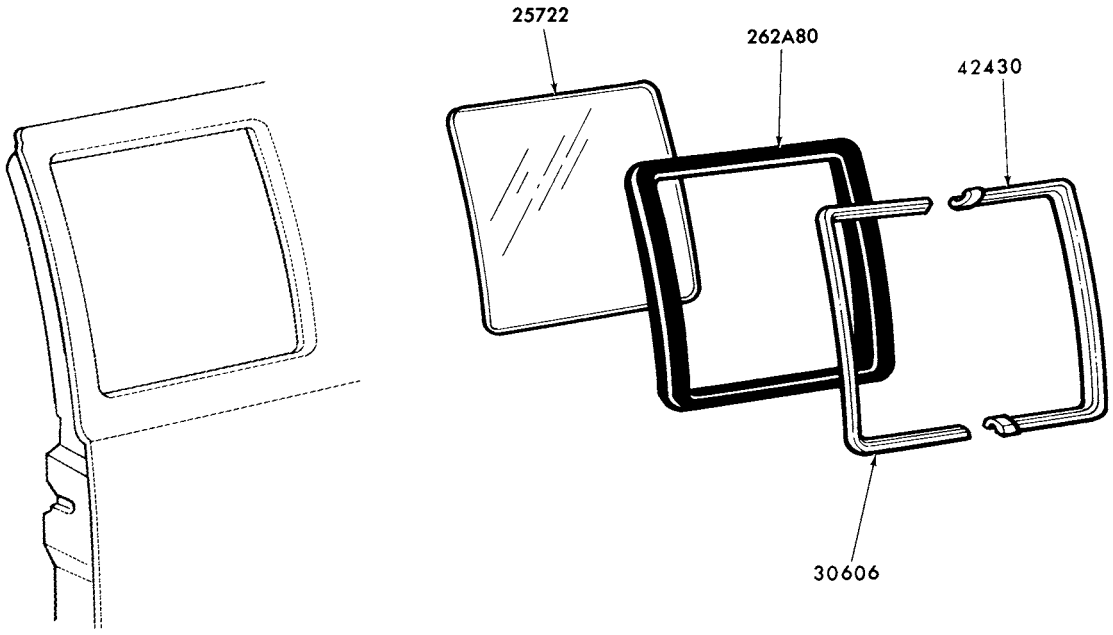

SIDE DOOR WINDOW PARTS-STATIONARY
1975/ E100/350--w/HINGED DOORS

COPYRIGHT © 1979 FORD MOTOR COMPANY, DEARBORN, MICHIGAN

1973/79 TRUCK SERIES 100/500

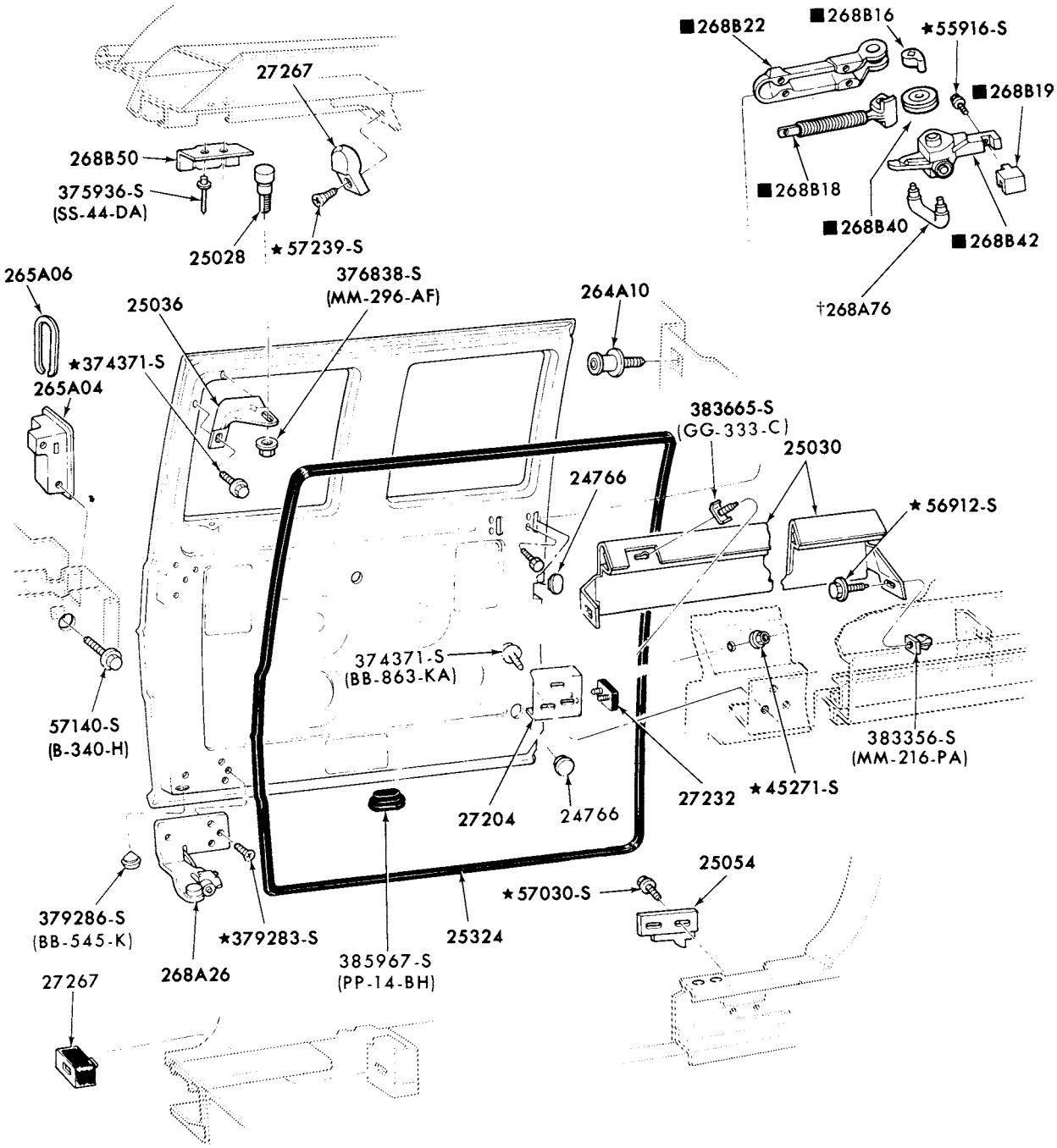

†SERVICED ONLY IN ASSY GROUP 26800
■ALSO SERVICED IN ASSY GROUP 26800

P-8749

SLIDING DOOR TRACK PARTS
1973/74 E100/350

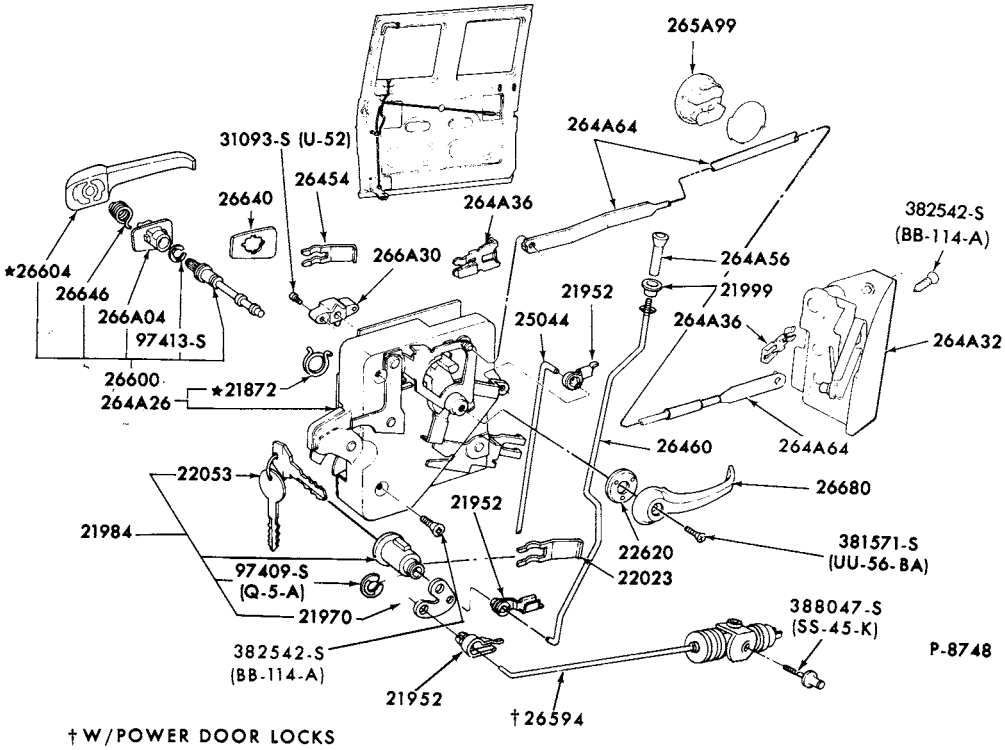

† W/POWER DOOR LOCKS

SLIDING DOOR HANDLE and LATCH PARTS
1973/ E100/350

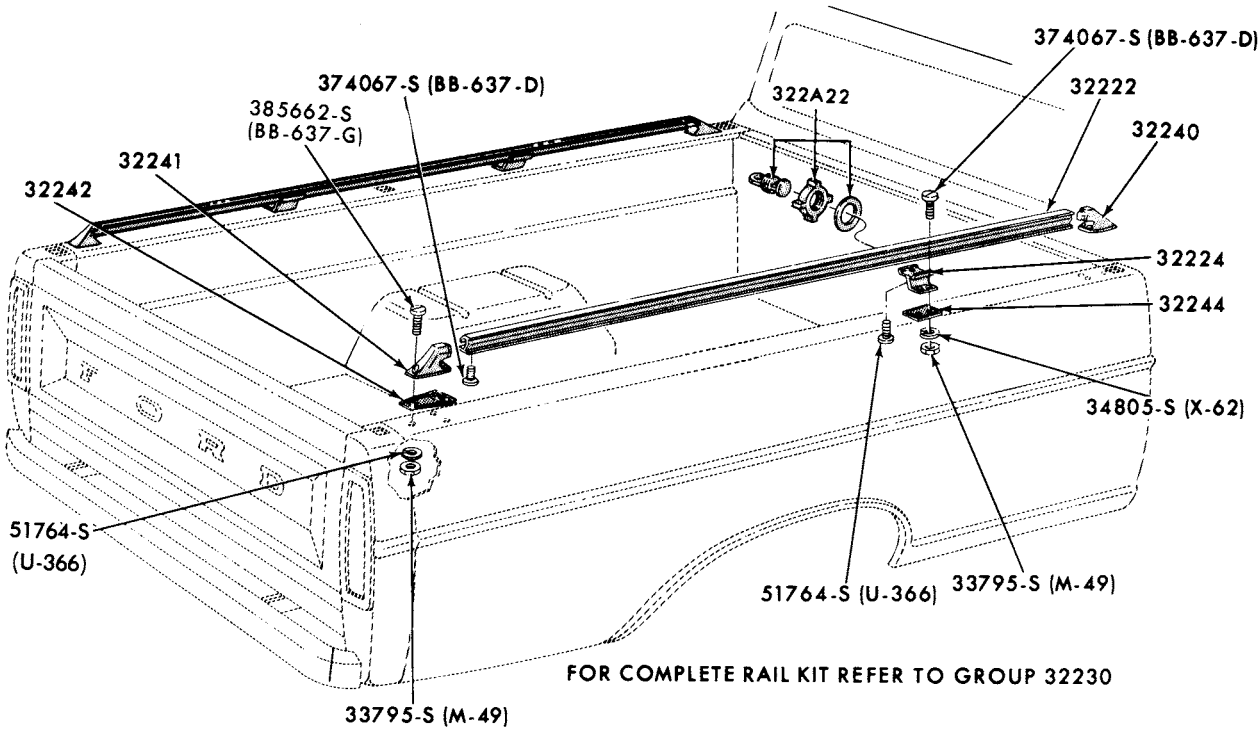

FOR COMPLETE RAIL KIT REFER TO GROUP 32230

PICKUP BOX SIDE RAILS-BOLT-ON TYPE
1973/ F100/250-BODY TYPE 99--8' BOX

COPYRIGHT © 1979 FORD MOTOR COMPANY - DEARBORN, MICHIGAN

1973/79 TRUCK SERIES 100/500

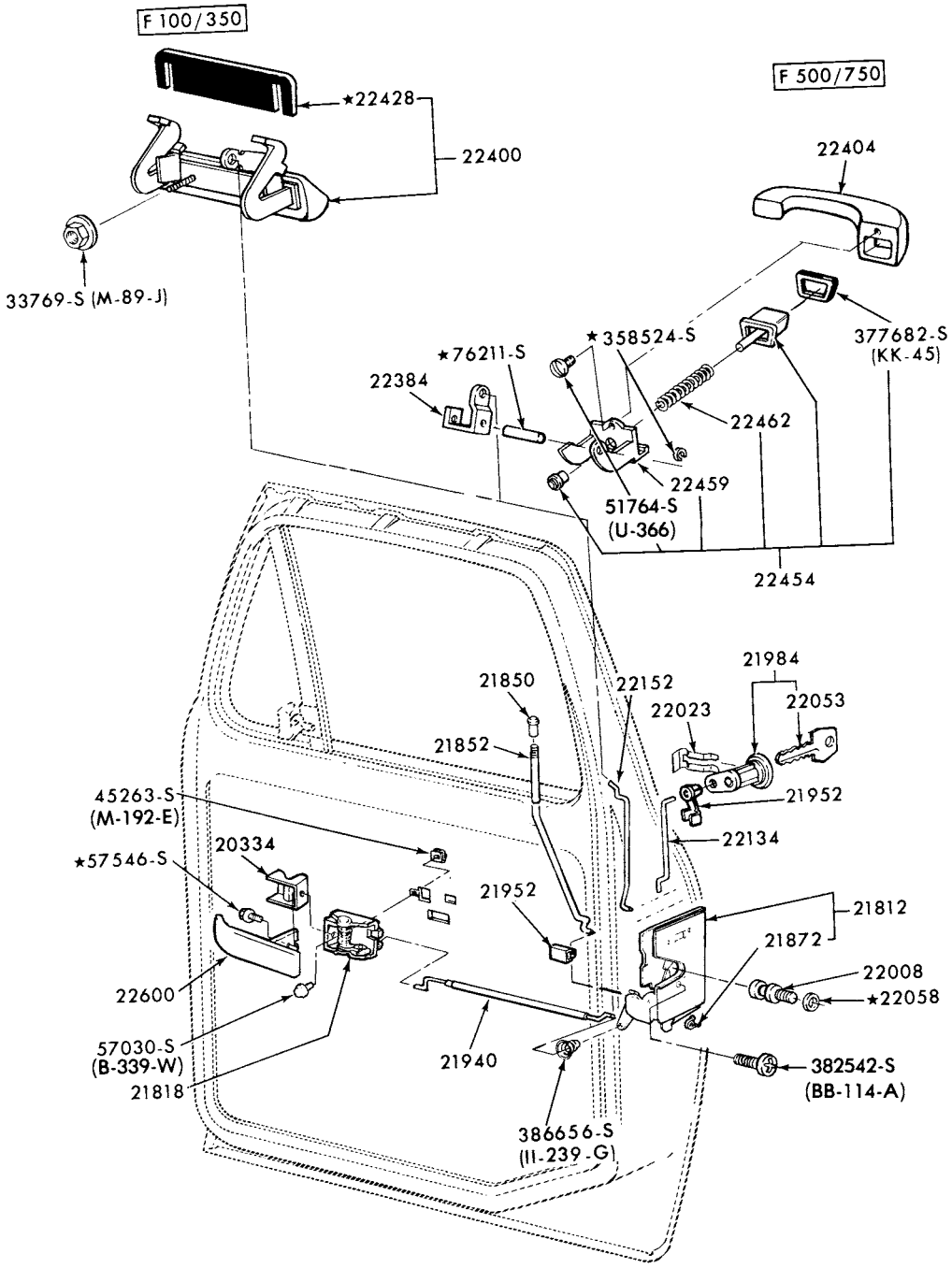

P-10231

FRONT DOOR HANDLE and LATCH PARTS
1973/77 F100/500 and 1978/ F100/350

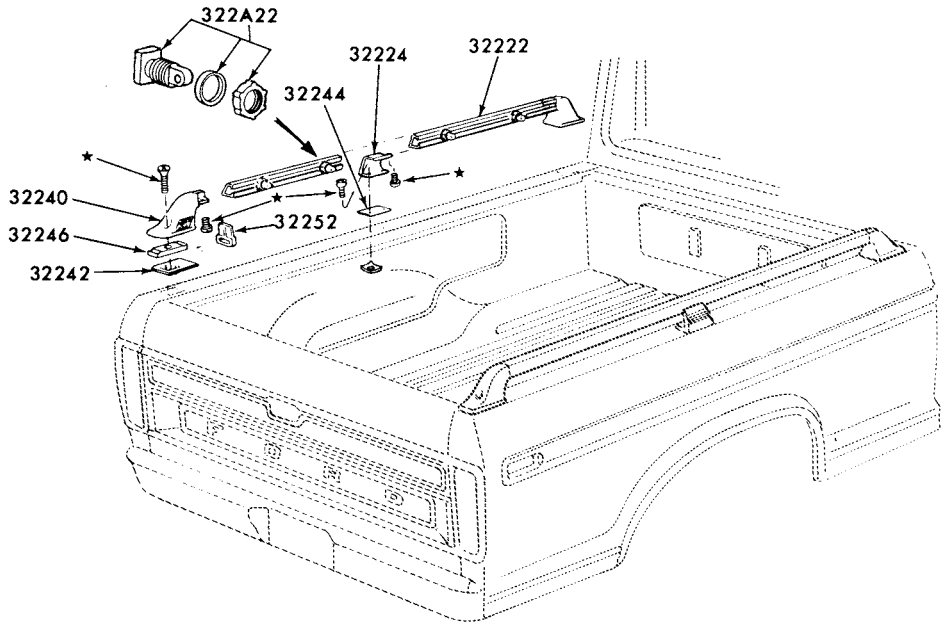

FOR COMPLETE RAIL KIT REFER TO GROUP 32230

P-10743

PICKUP BOX SIDE RAILS-STAKE MOUNTED
1973/ F100-BODY TYPE 99--6 3/4' BOX

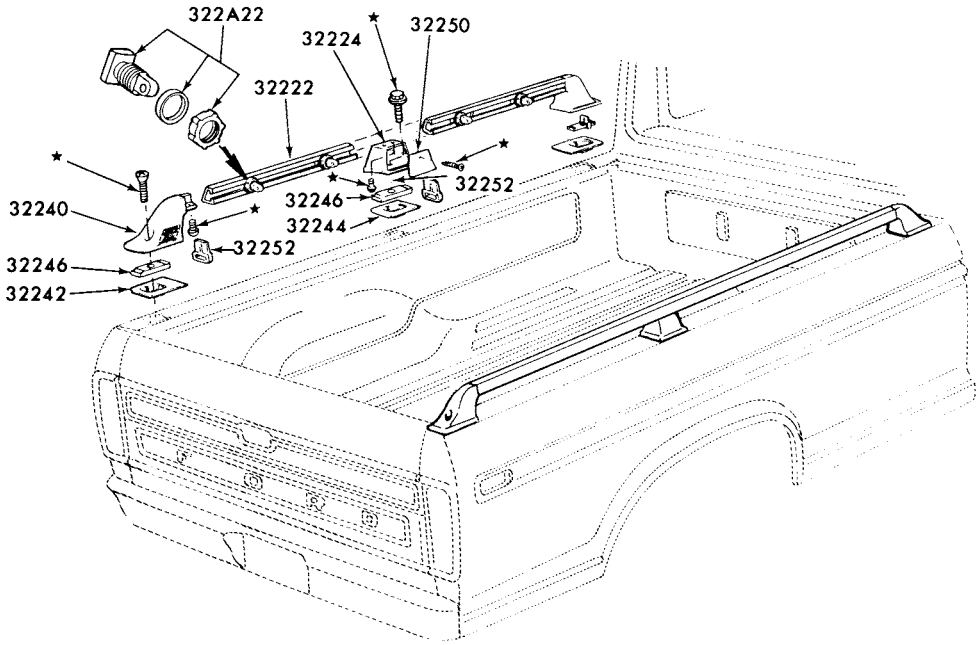

FOR COMPLETE RAIL KIT REFER TO GROUP 32230

P-10744

PICKUP BOX SIDE RAILS-STAKE MOUNTED
1973/ F100/250-BODY TYPE 99--8'BOX

COPYRIGHT © 1979 FORD MOTOR-DEARBORN, MICHIGAN COMPANY

1973/79
TRUCK SERIES 100/500

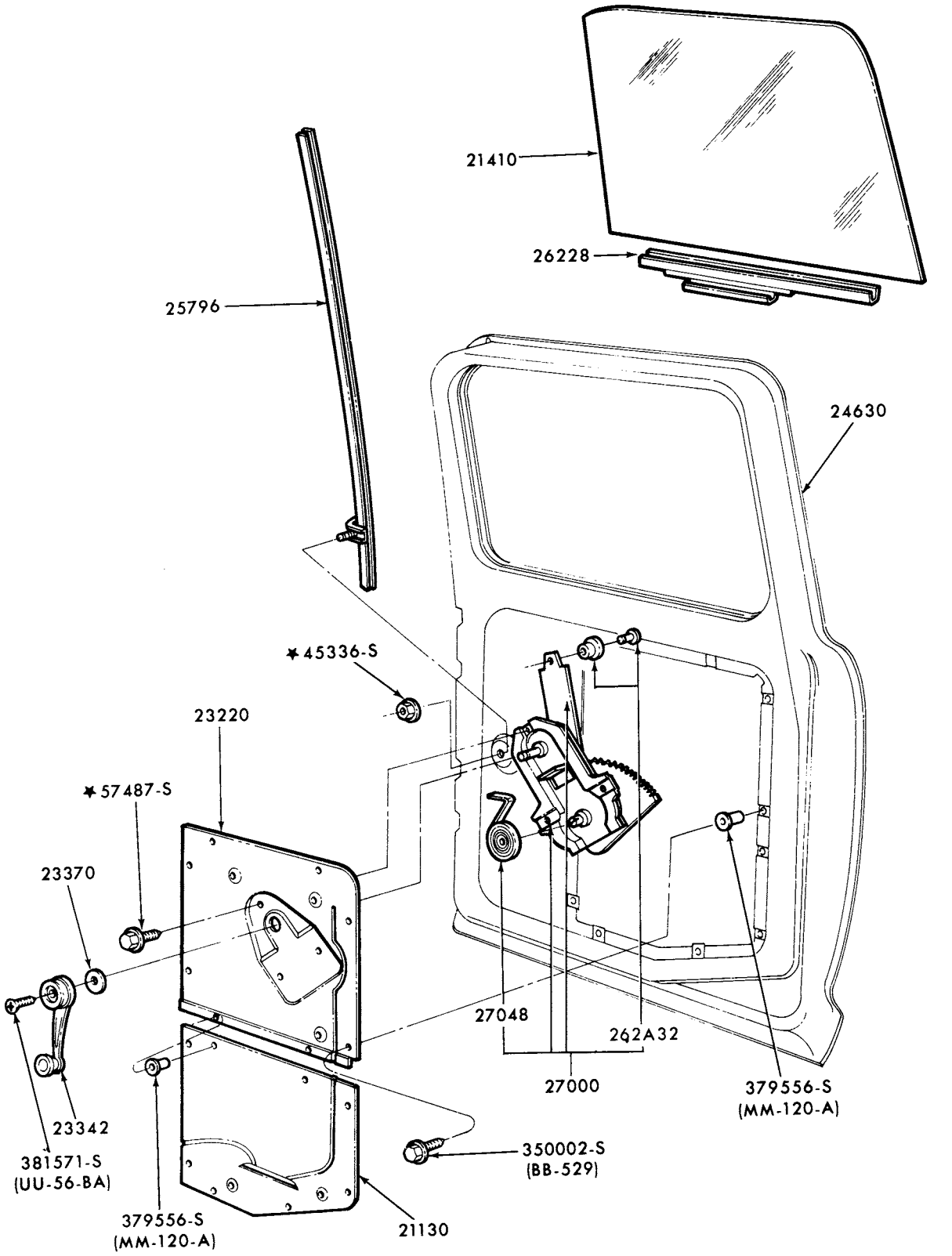

REAR DOOR WINDOW PARTS
1973/77 F250/500 (CREW CAB) and 1978/ F250/350 (CREW CAB)

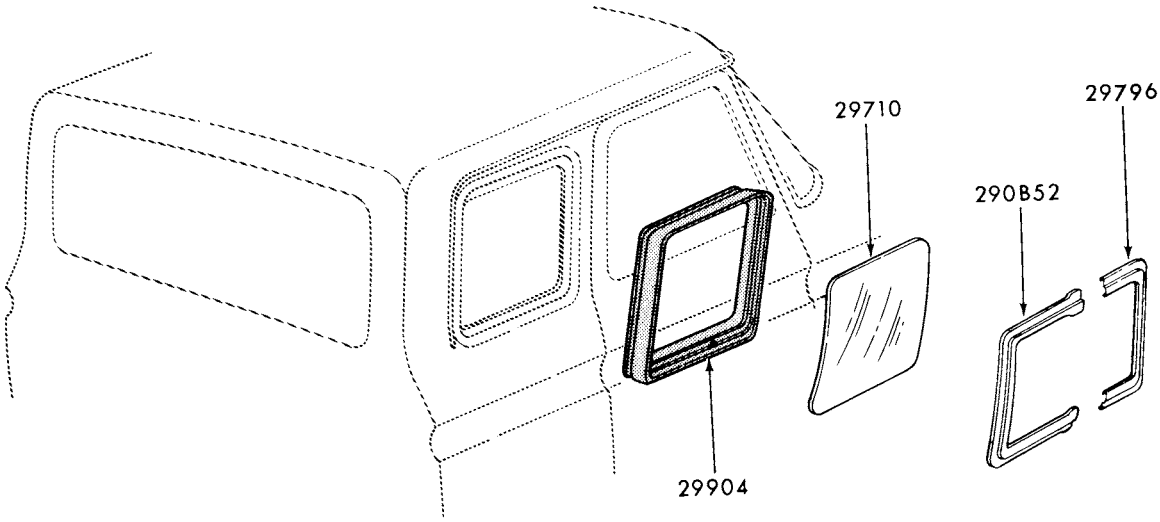

P-11474

QUARTER WINDOW and RELATED PARTS
1974/77 F100/350 (SUPER CAB)--STATIONARY TYPE - "BEFORE SER. 080,001"

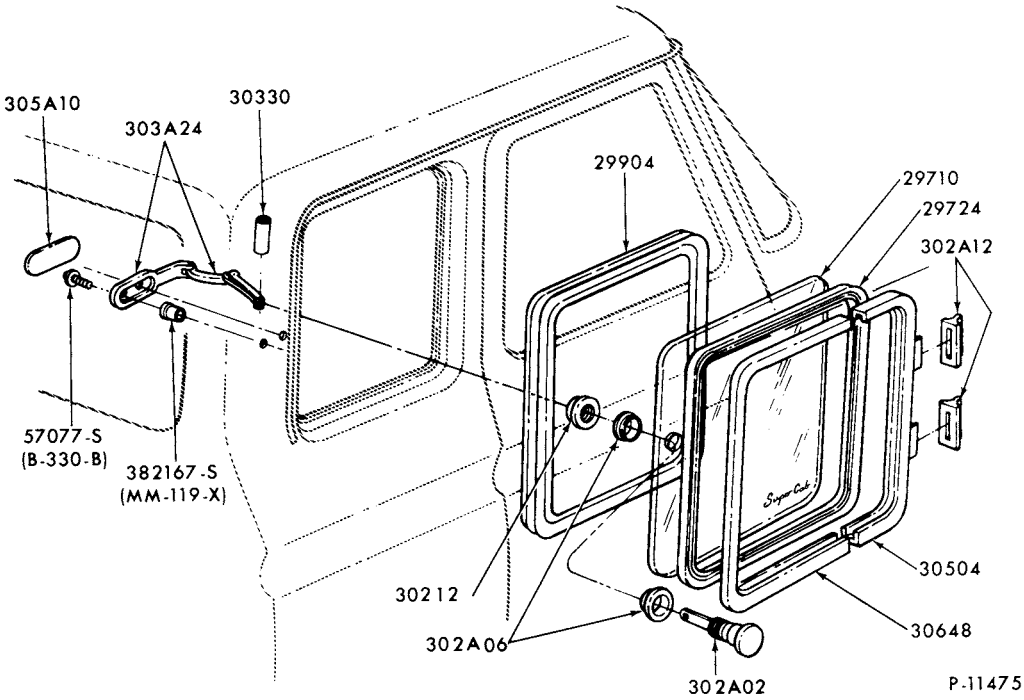

QUARTER WINDOW and RELATED PARTS
1974/ F100/350 (SUPER CAB)--MOVEABLE TYPE

COPYRIGHT © 1979 FORD MOTOR COMPANY - DEARBORN, MICHIGAN

1973/79 TRUCK SERIES 100/500

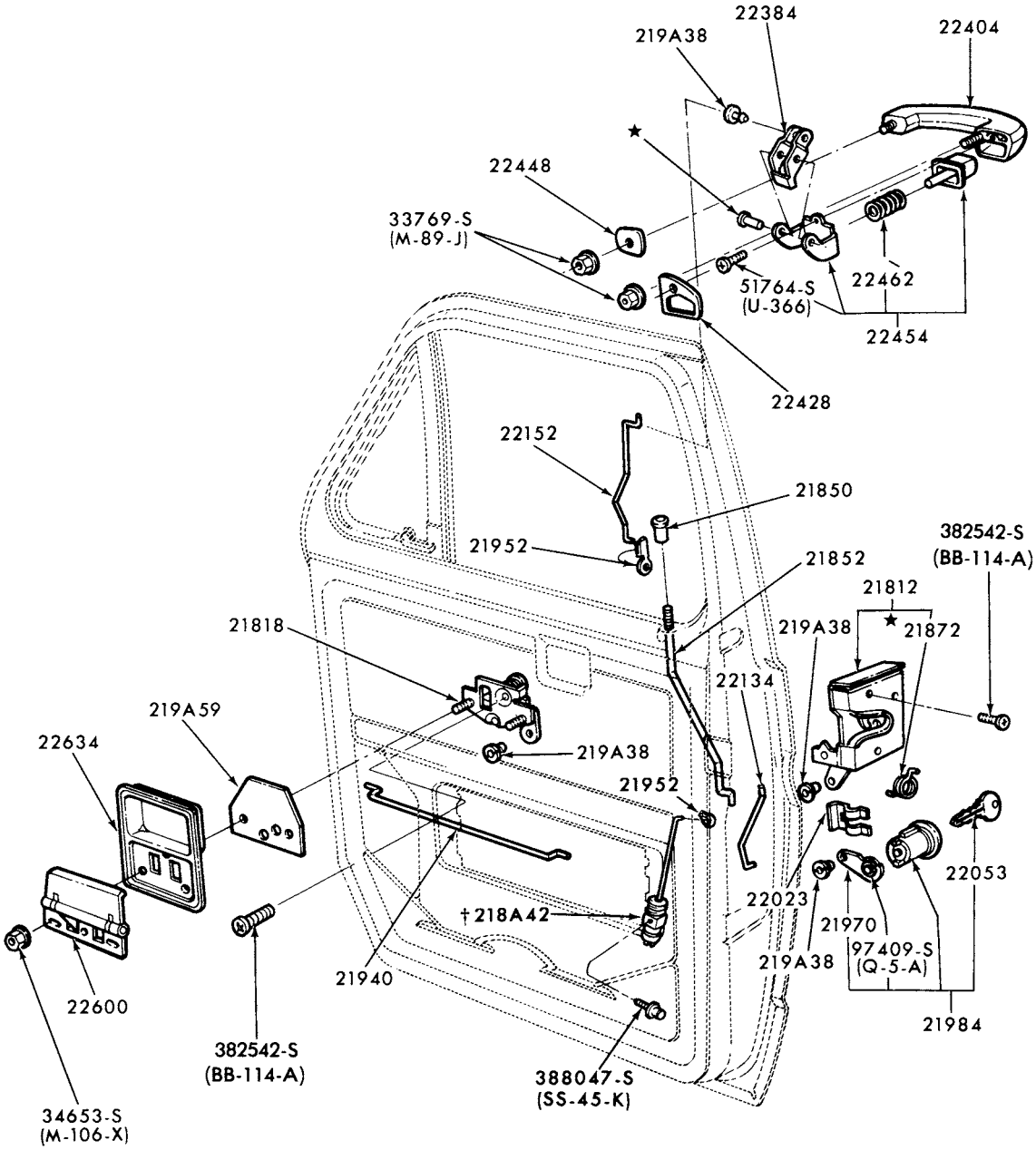

† W/POWER DOOR LOCKS

P-12060

FRONT DOOR HANDLE and LATCH PARTS
1975/ E100/350

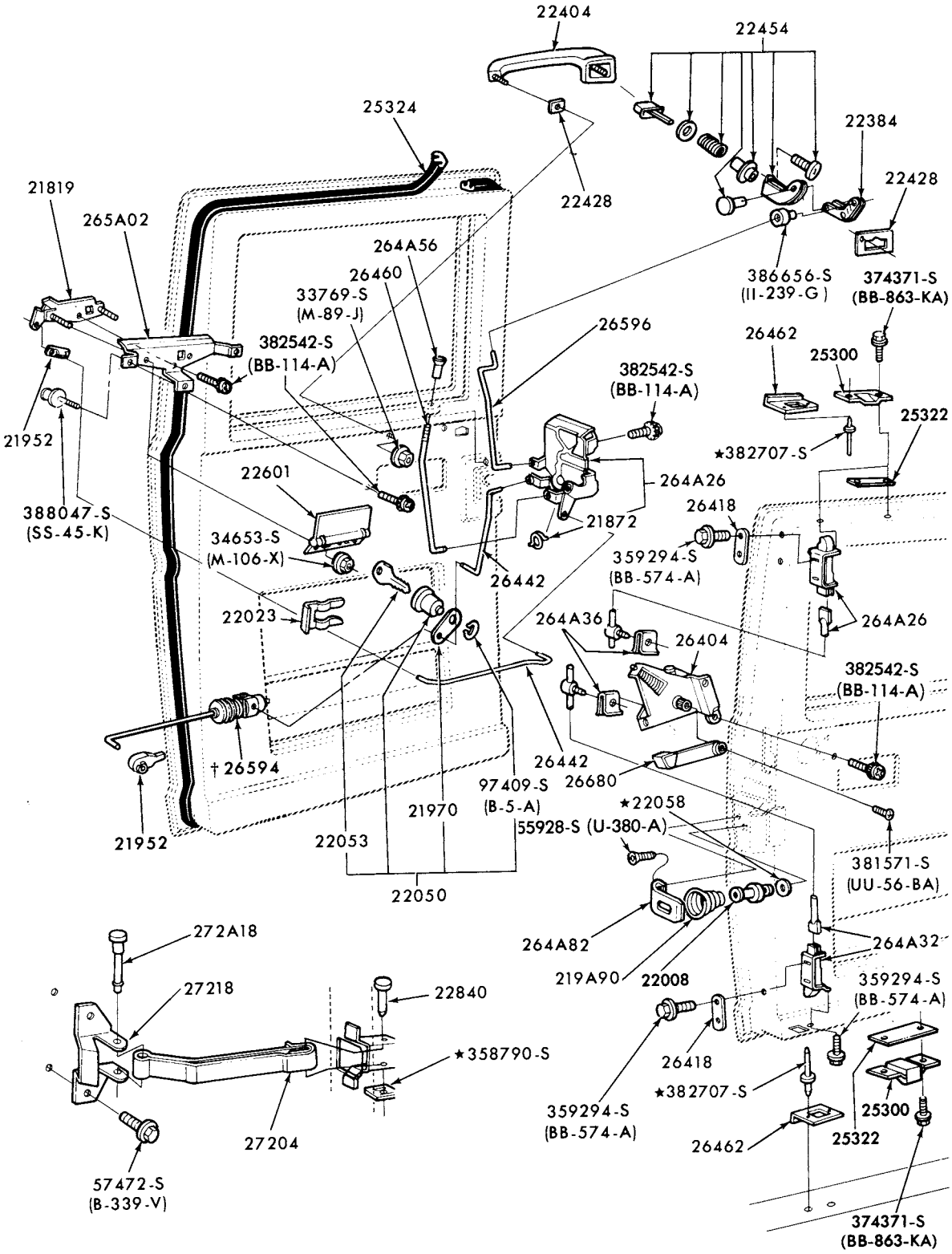

† W/POWER DOOR LOCKS

P-12099

SIDE DOOR HANDLE and LATCH PARTS
1975/ E100/350--w/ HINGED DOORS

COPYRIGHT © 1979 -FORD MOTOR-DEARBORN, MICHIGAN COMPANY

1973/79 TRUCK SERIES 100/500

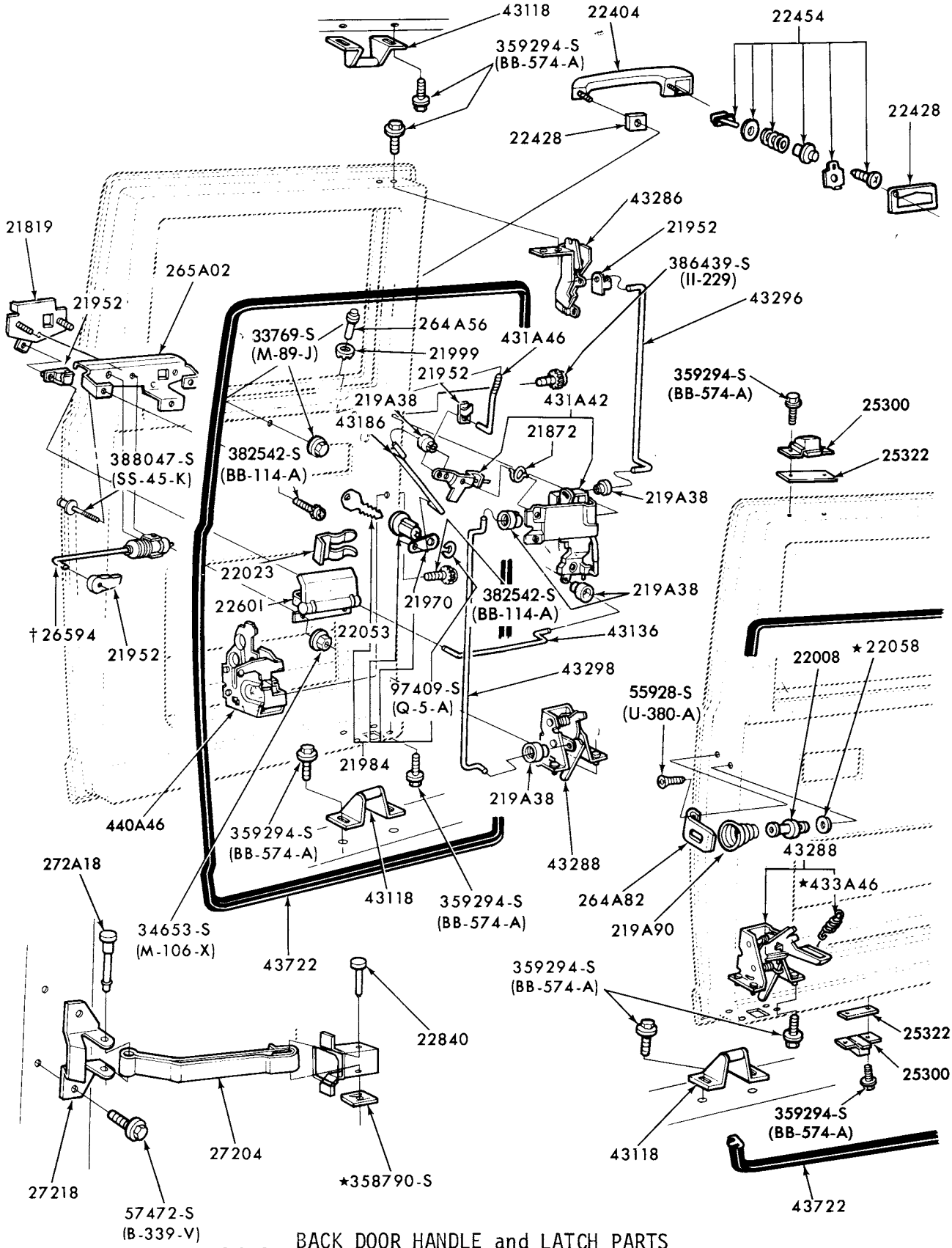

† W/POWER DOOR LOCKS

BACK DOOR HANDLE and LATCH PARTS
1975/ E100/350

P-12102

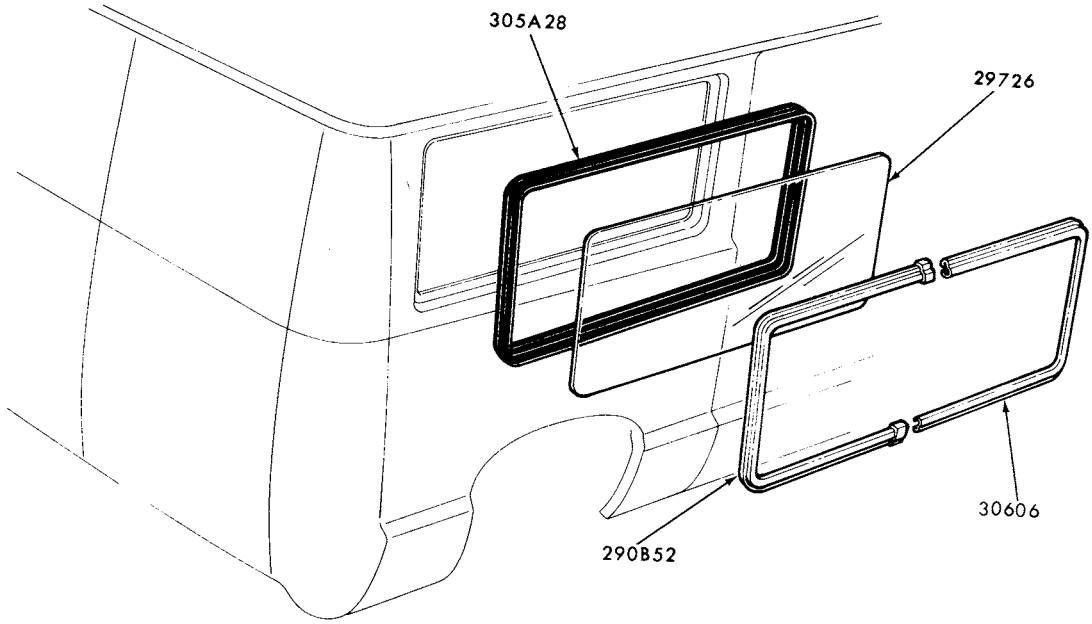

P-12131

QUARTER WINDOW REAR and RELATED PARTS
1975/ E100/350

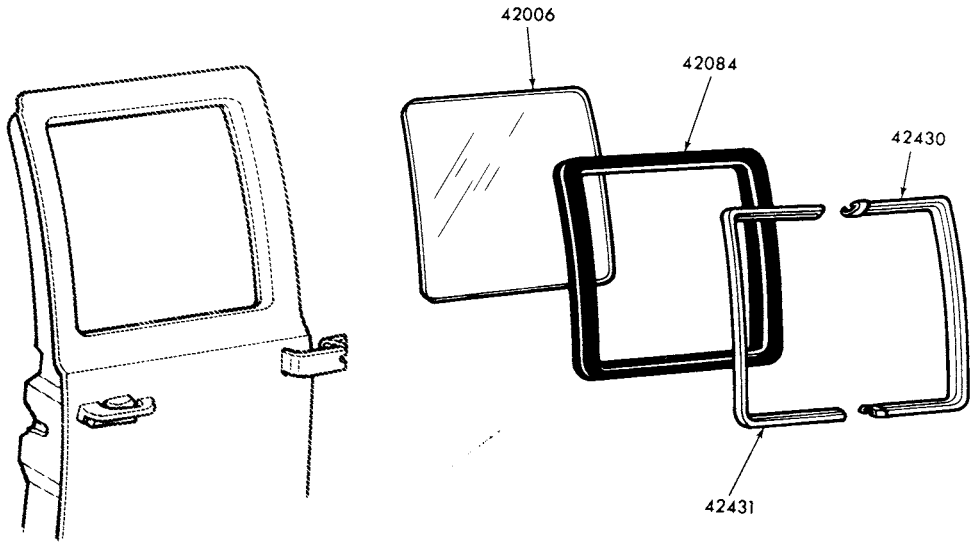

P-12110

BACK DOOR WINDOW PARTS
1975/ E100/350-STATIONARY TYPE

COPYRIGHT © 1980 FORD MOTOR COMPANY-DEARBORN, MICHIGAN

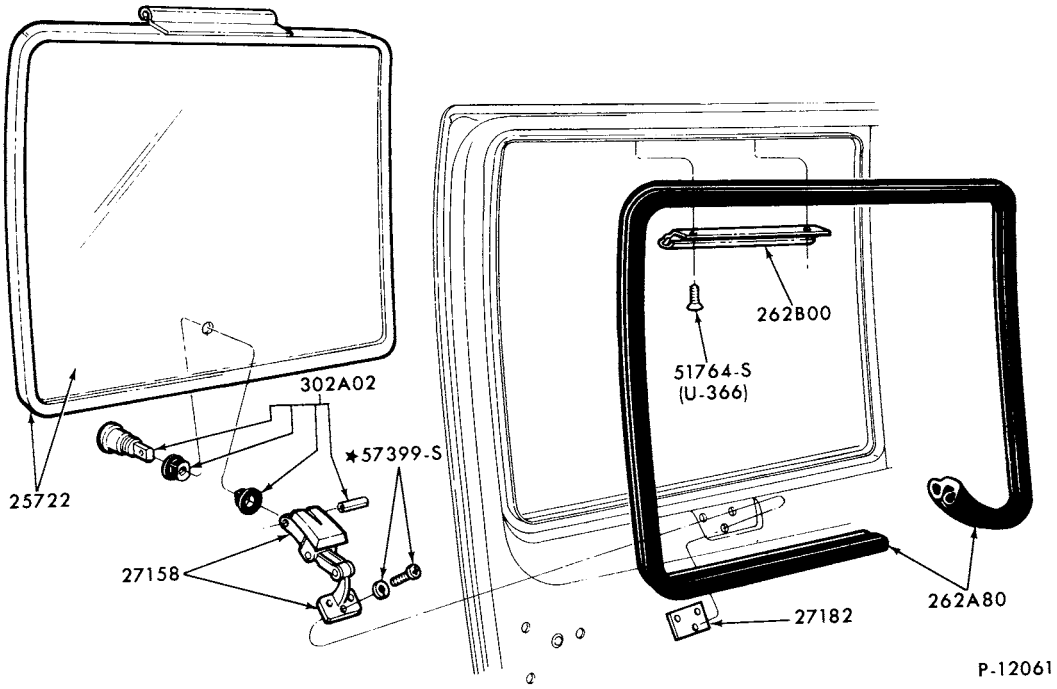

BODY and SIDE DOOR WINDOW PARTS-MOVEABLE (TEMPERED)
1975/ E100/350

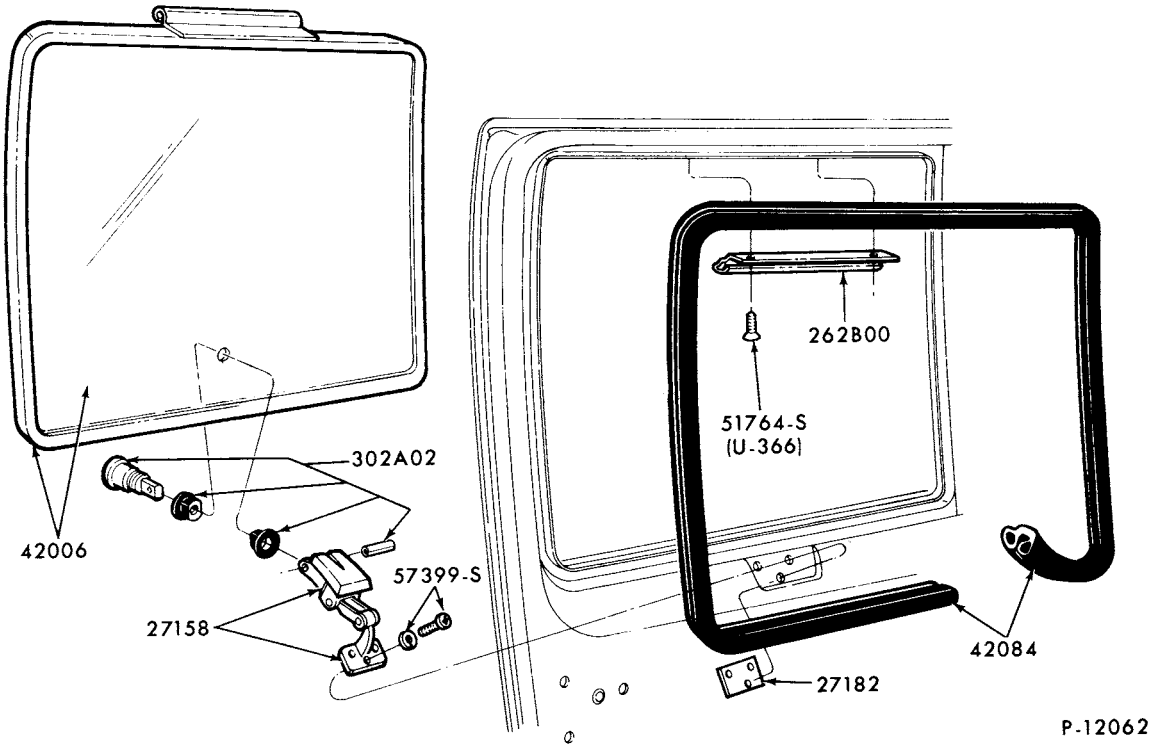

BACK DOOR WINDOW PARTS-MOVEABLE (TEMPERED)
1975/ E100/350

COPYRIGHT © 1980— FORD MOTOR COMPANY —DEARBORN, MICHIGAN

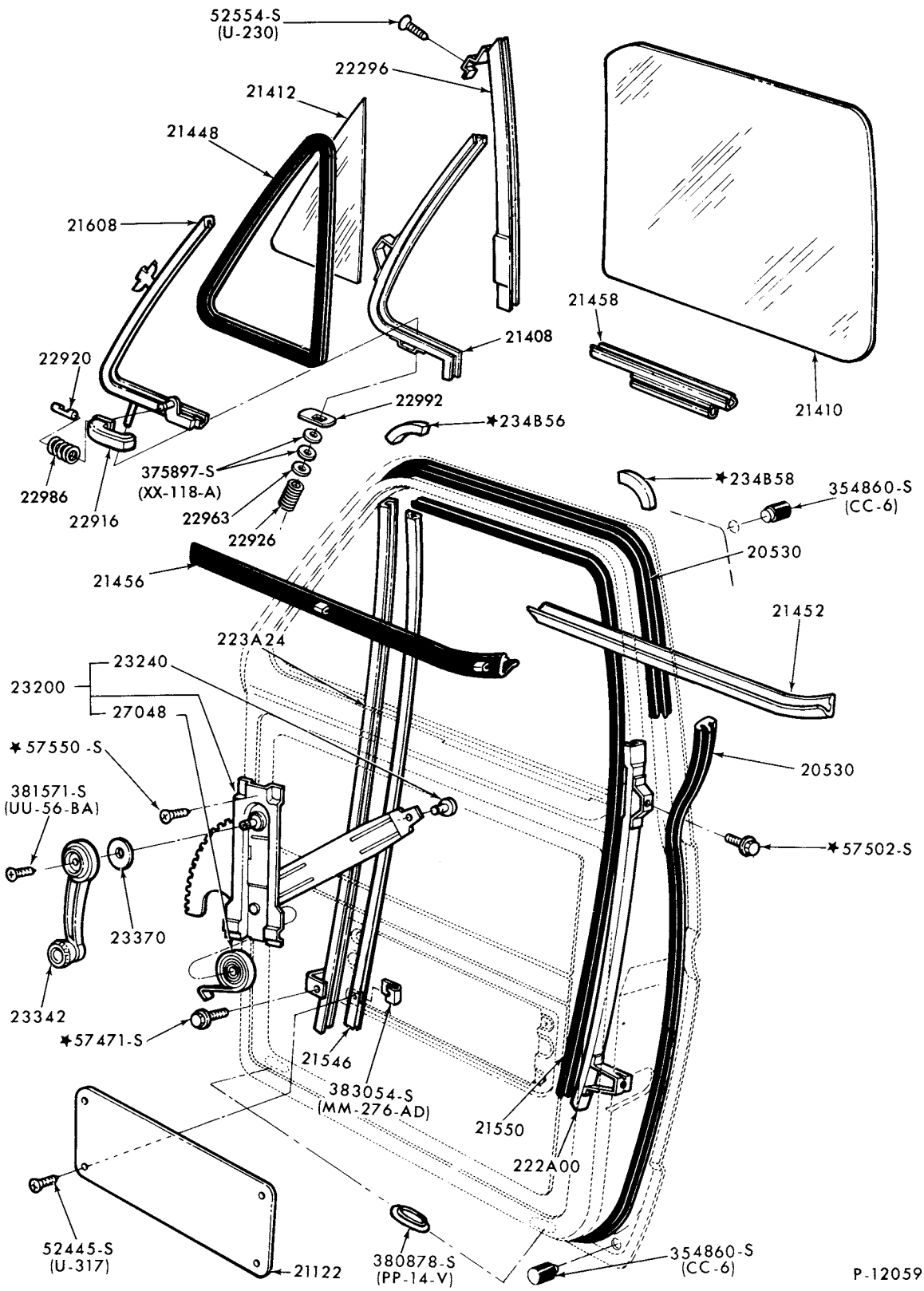

FRONT DOOR WINDOW PARTS
1975/ E100/350

COPYRIGHT © 1979 FORD MOTOR COMPANY, DEARBORN, MICHIGAN

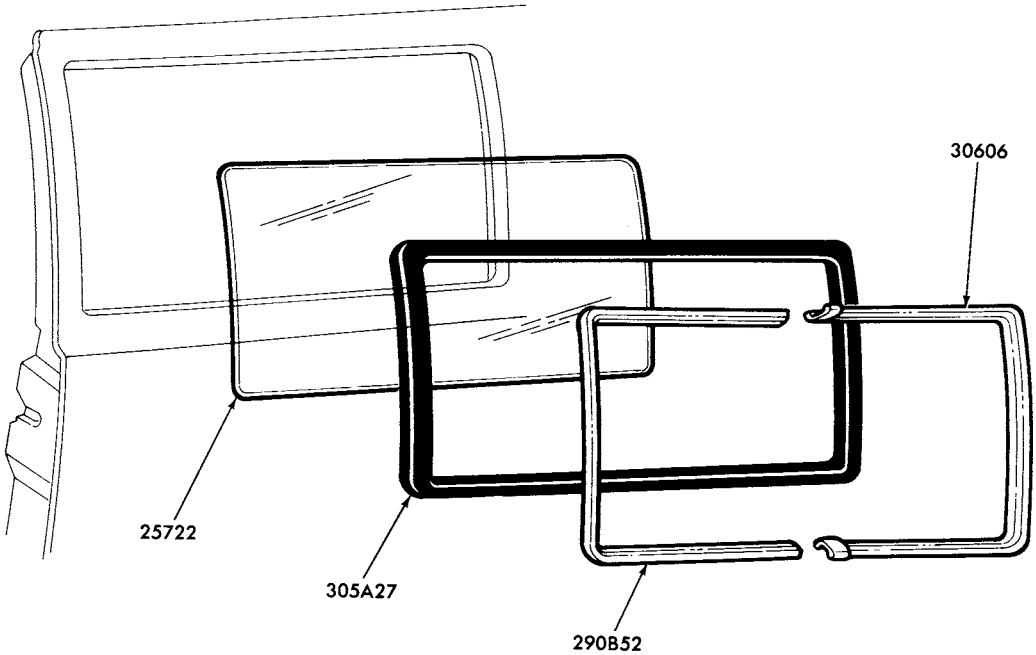

P-12691

FRONT QUARTER WINDOW and SLIDING DOOR WINDOW PARTS
1975/ E100/350-STATIONARY TYPE

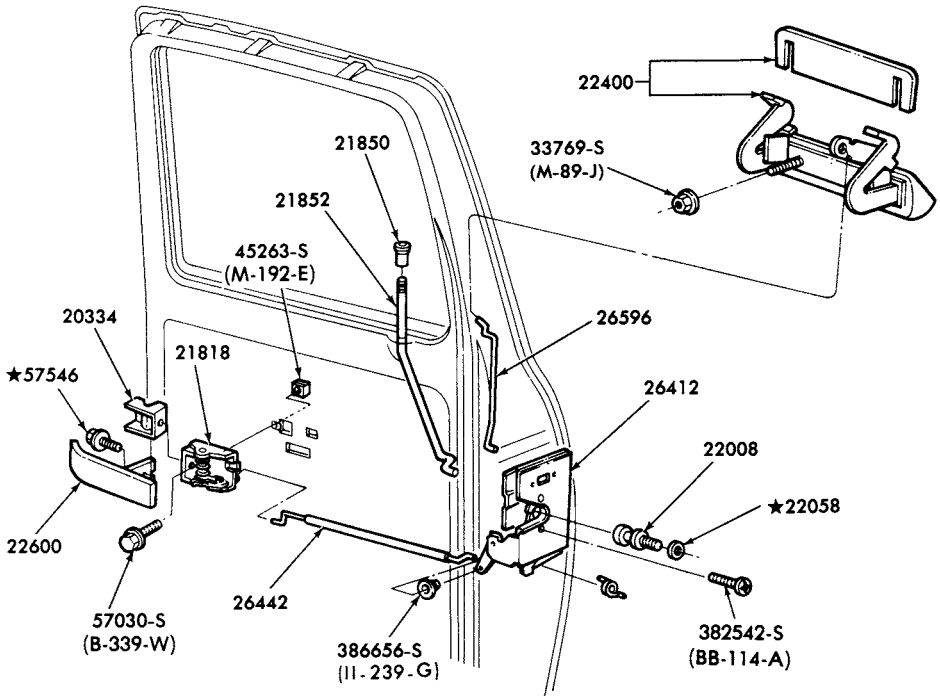

P-12952

REAR DOOR HANDLE and LATCH PARTS
1973/77 F250/500 (CREW CAB) and 1978/ F250/350 (CREW CAB)

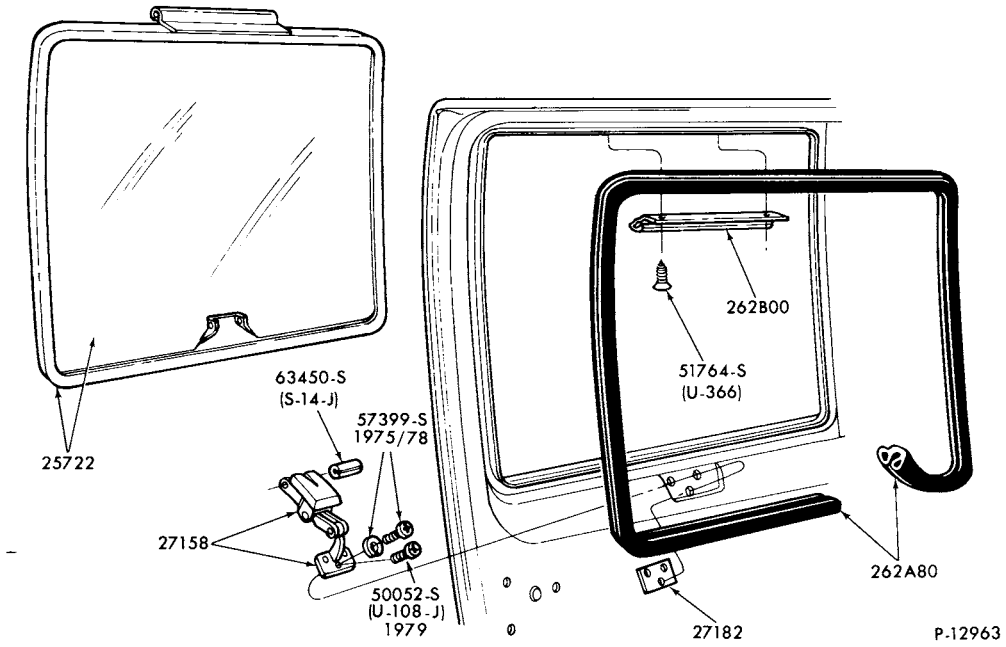

BODY and SIDE DOOR WINDOW PARTS-MOVEABLE (LAMINATED)
1975/ E100/350

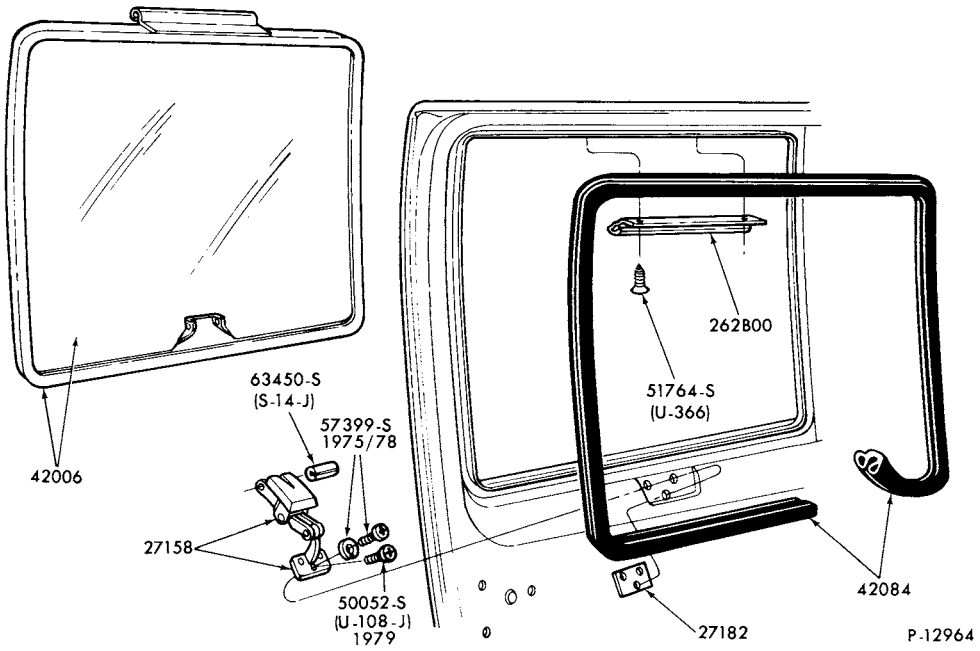

BACK DOOR WINDOW PARTS-MOVEABLE (LAMINATED)
1975/ E100/350

COPYRIGHT © 1979 FORD MOTOR-DEARBORN, MICHIGAN COMPANY

1973/79
TRUCK SERIES 100/500

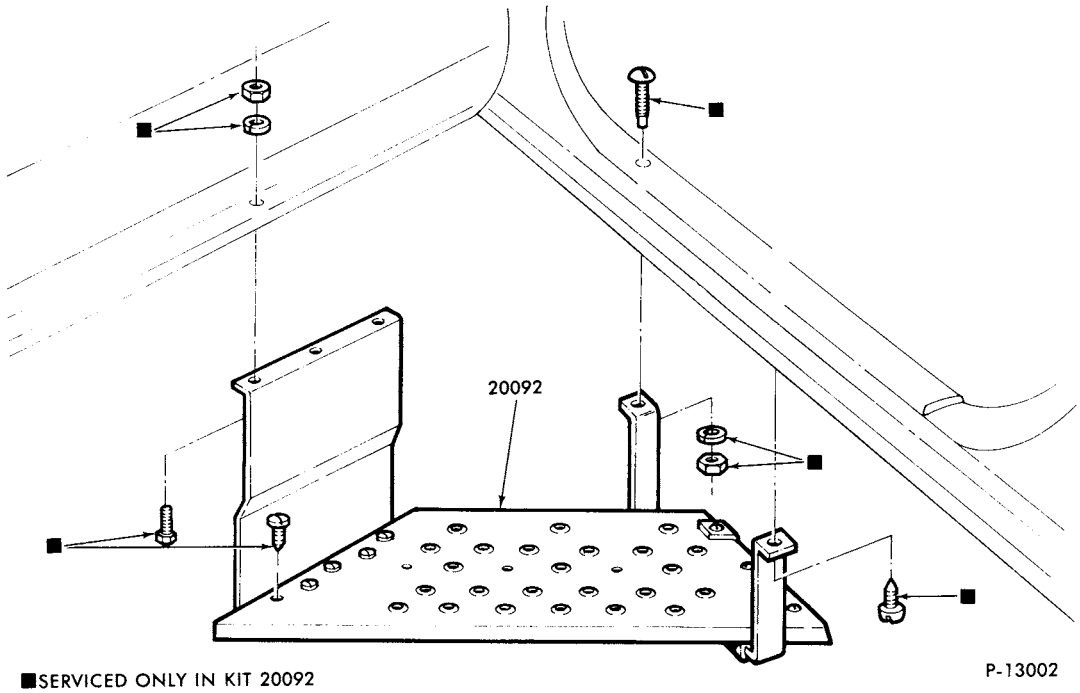

BODY SIDE STEP PARTS
1973/ F100/350

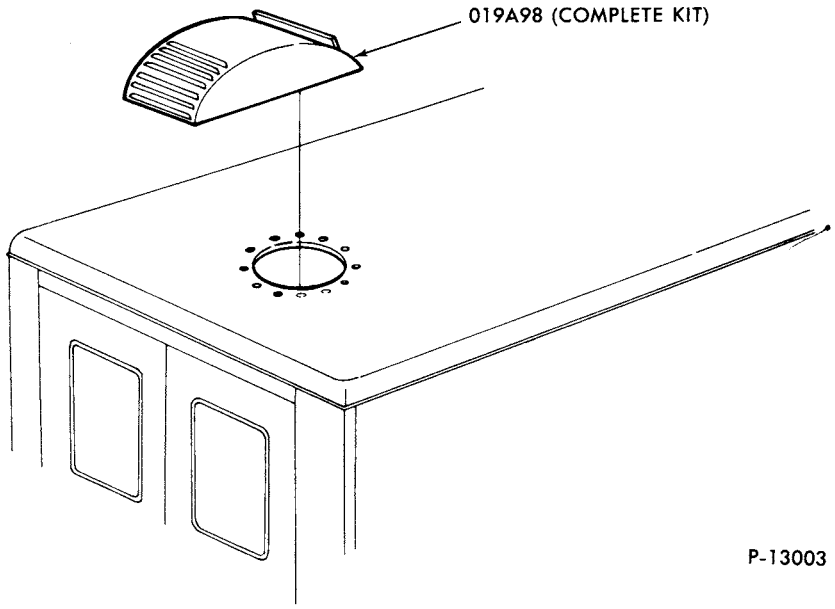

ROOF VENT (POWER)
1973/ E100/350

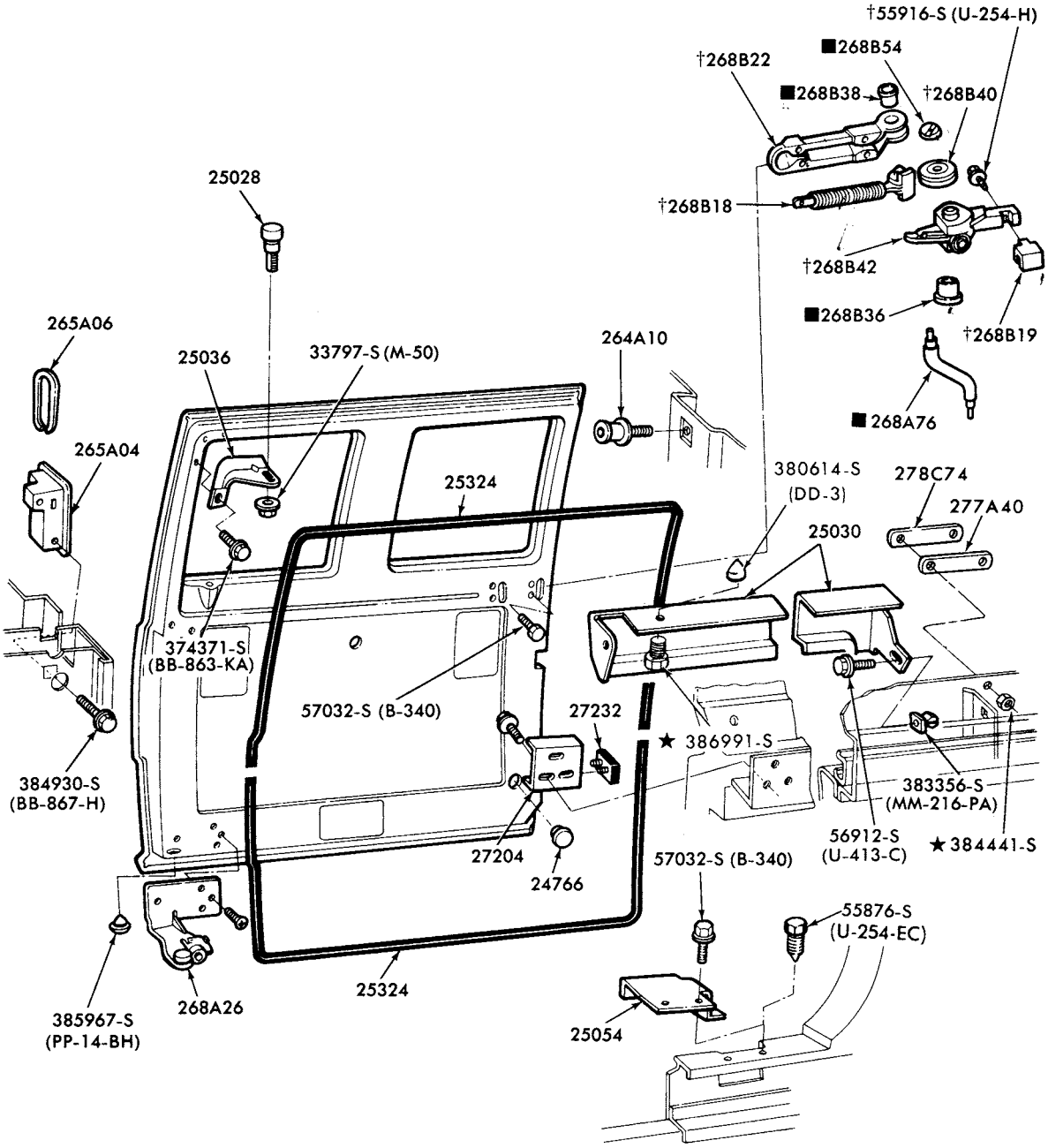

■SERVICED ONLY IN ASSY. GROUP 26800
†ALSO SERVICED IN ASSY. GROUP 26800

P-13006

SLIDING DOOR TRACK PARTS
1975/ E100/350

COPYRIGHT © 1979 FORD MOTOR COMPANY DEARBORN, MICHIGAN

1973/79
TRUCK SERIES 100/500

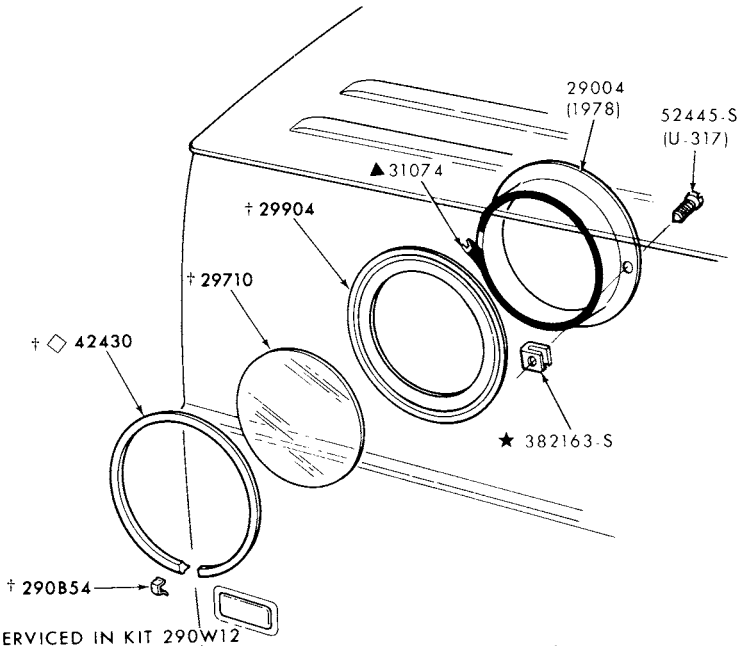

† ALSO SERVICED IN KIT 290W12
◇ REFER TO GROUP IN EXTERIOR MOULDING SECTION FOR DETAILS
▲ REFER TO GROUP IN SOFT TRIM SECTION

P-13444

PORT HOLE WINDOW
1977/ E100/350

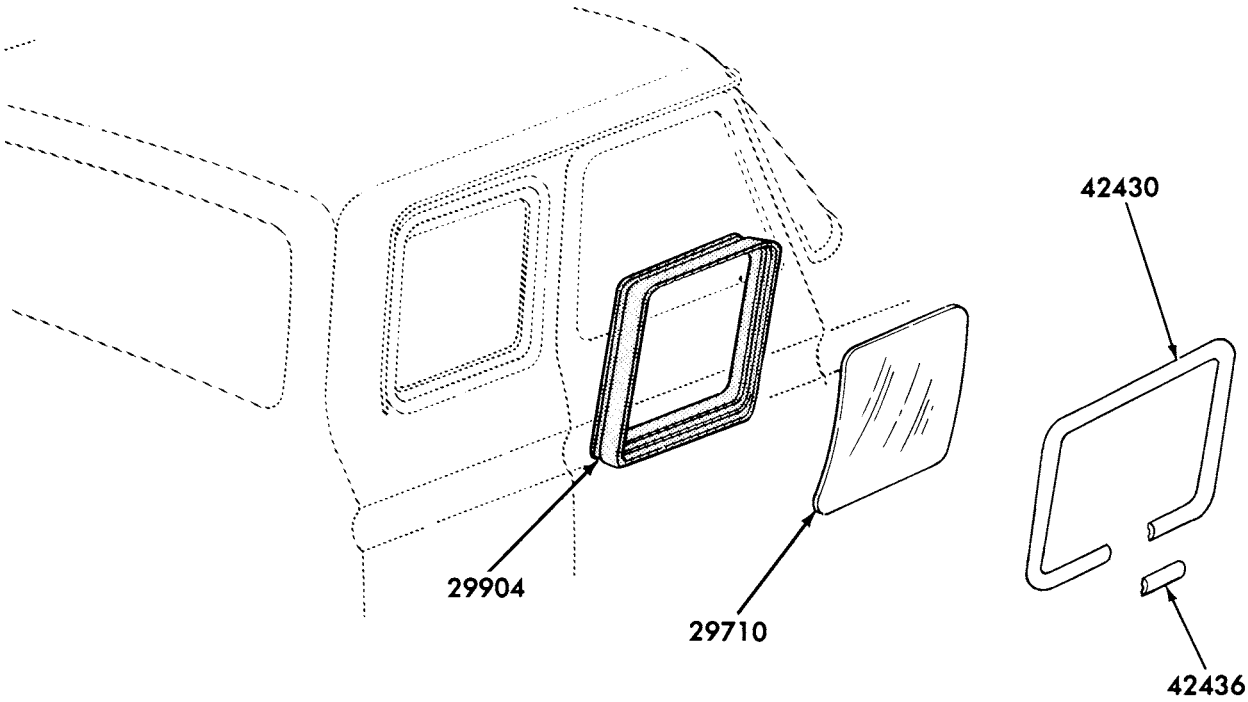

P-14096

QUARTER WINDOW and RELATED PARTS
1977/ F100/350 (SUPER CAB) -STATIONARY TYPE

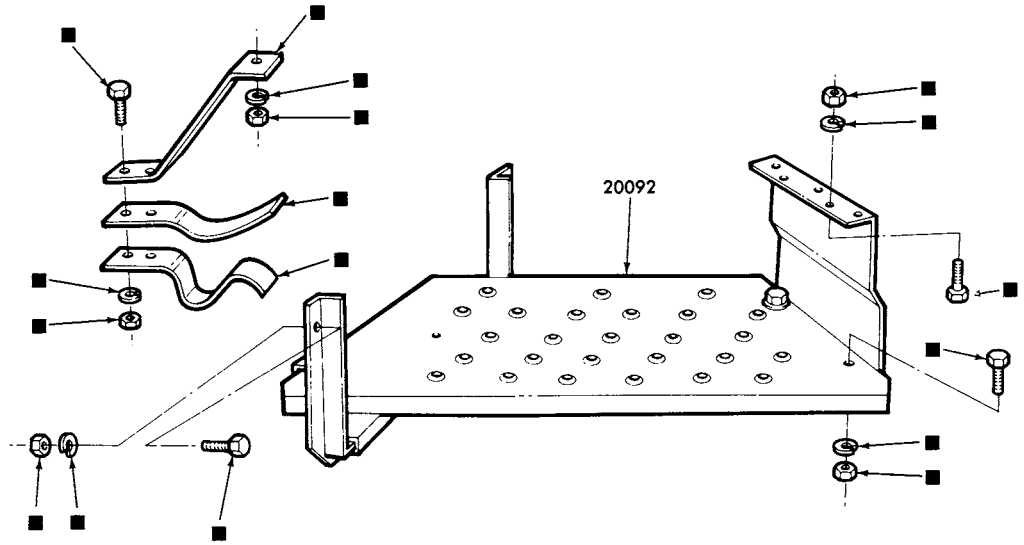

■SERVICED ONLY IN KIT 20092

P-14450

FRONT DOOR STEP PARTS
1977/79 E100/350

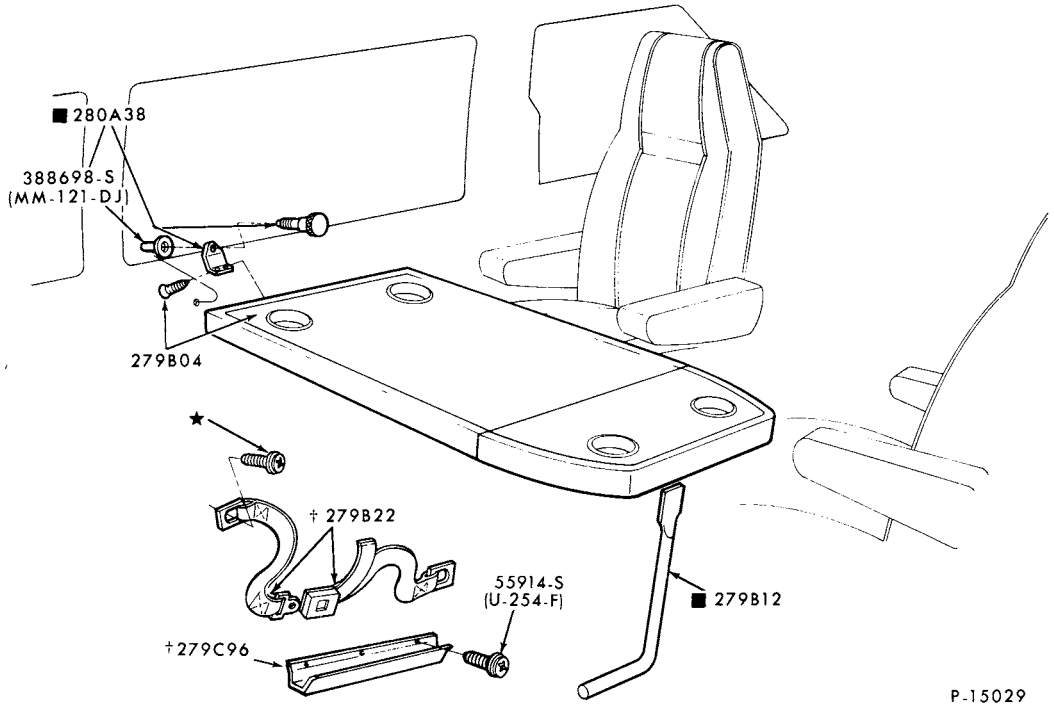

P-15029

■ ALSO SERVICED IN ASSY GROUP 279B04
† USED TO STORE UTILITY TABLE ON REAR DOOR

UTILITY TABLE and RELATED PARTS
1979 E100/350

COPYRIGHT © 1979 FORD MOTOR COMPANY—DEARBORN, MICHIGAN

1973/79
TRUCK SERIES 100/500

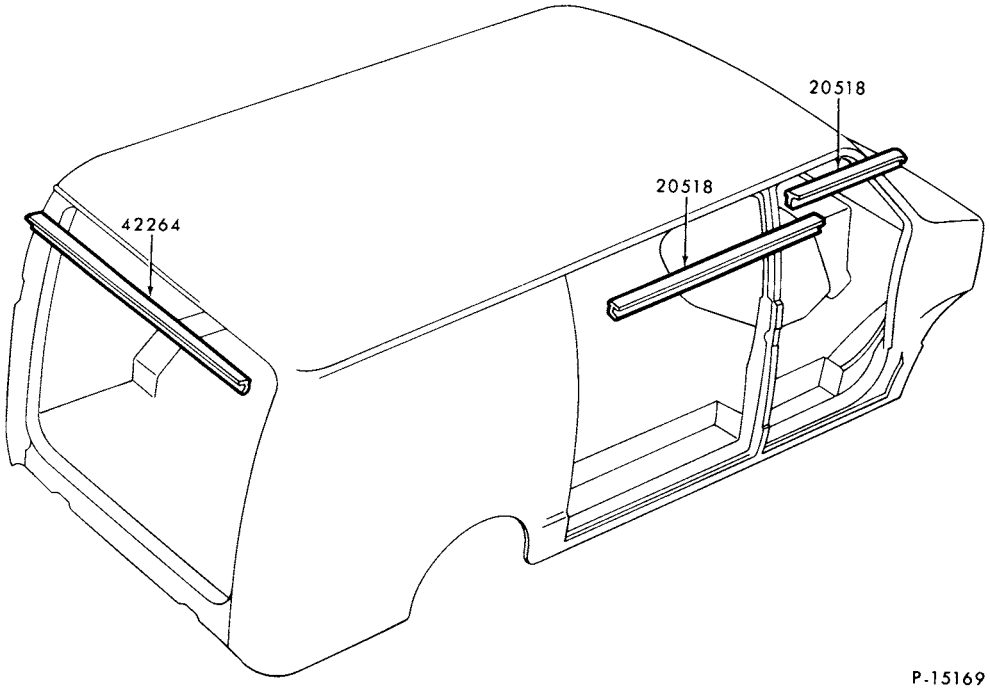

DOOR OPENING WEATHERSTRIPS
1978/79 E100/350

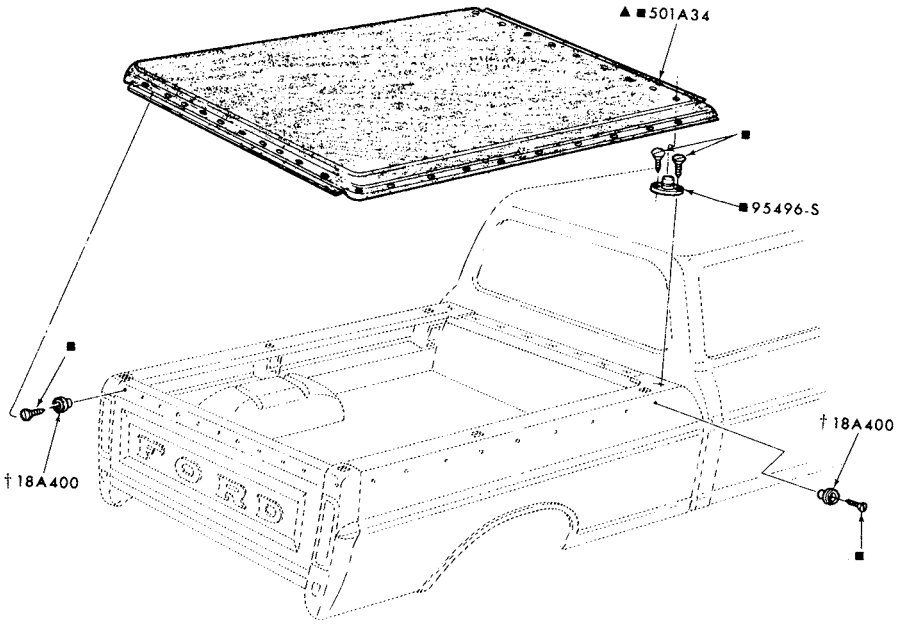

▲ REFER TO GROUP IN SOFT TRIM SECTION
■ SERVICED ONLY IN KIT—GROUP 501A42 (INCLUDES STORAGE BAG)
† ALSO SERVICED IN KIT—GROUP 501A42

P-8334

TONNEAU COVER and RELATED PARTS
1973/79 F100/350-BODY TYPE 99--8' BOX

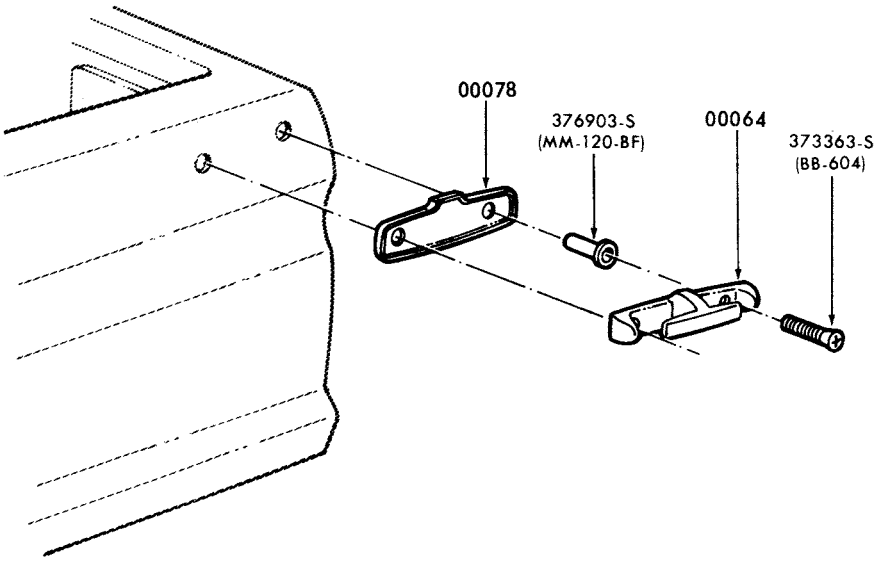

P-10449

TIE DOWN HOOKS
1973/79 F100/350

COPYRIGHT © 1980 FORD MOTOR COMPANY—DEARBORN, MICHIGAN

1973/79 TRUCK SERIES 100/500

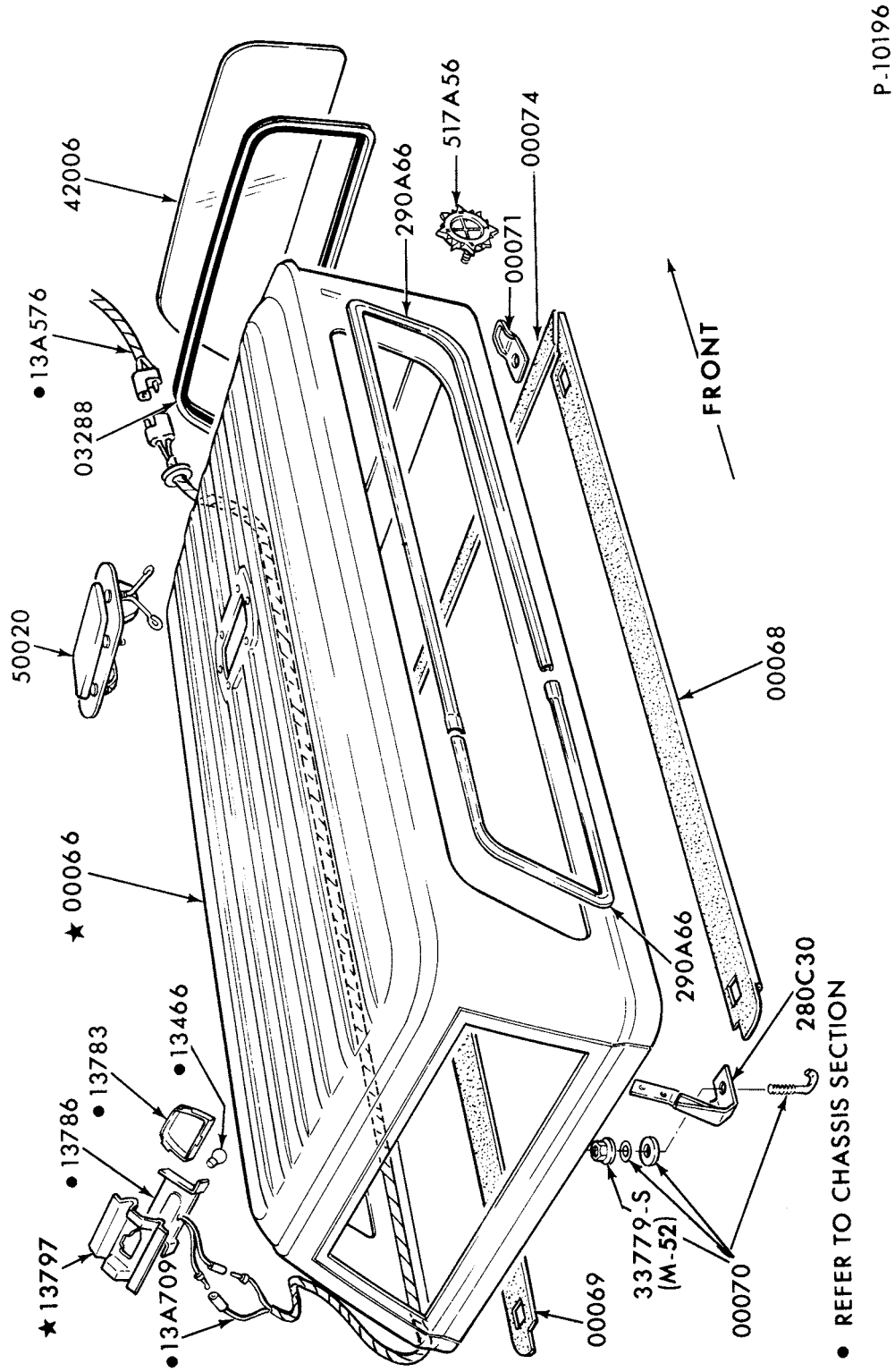

PICKUP BOX COVER (w/SLIDING WINDOWS)
1973/79 F100/350-BODY TYPE 99--8' BOX

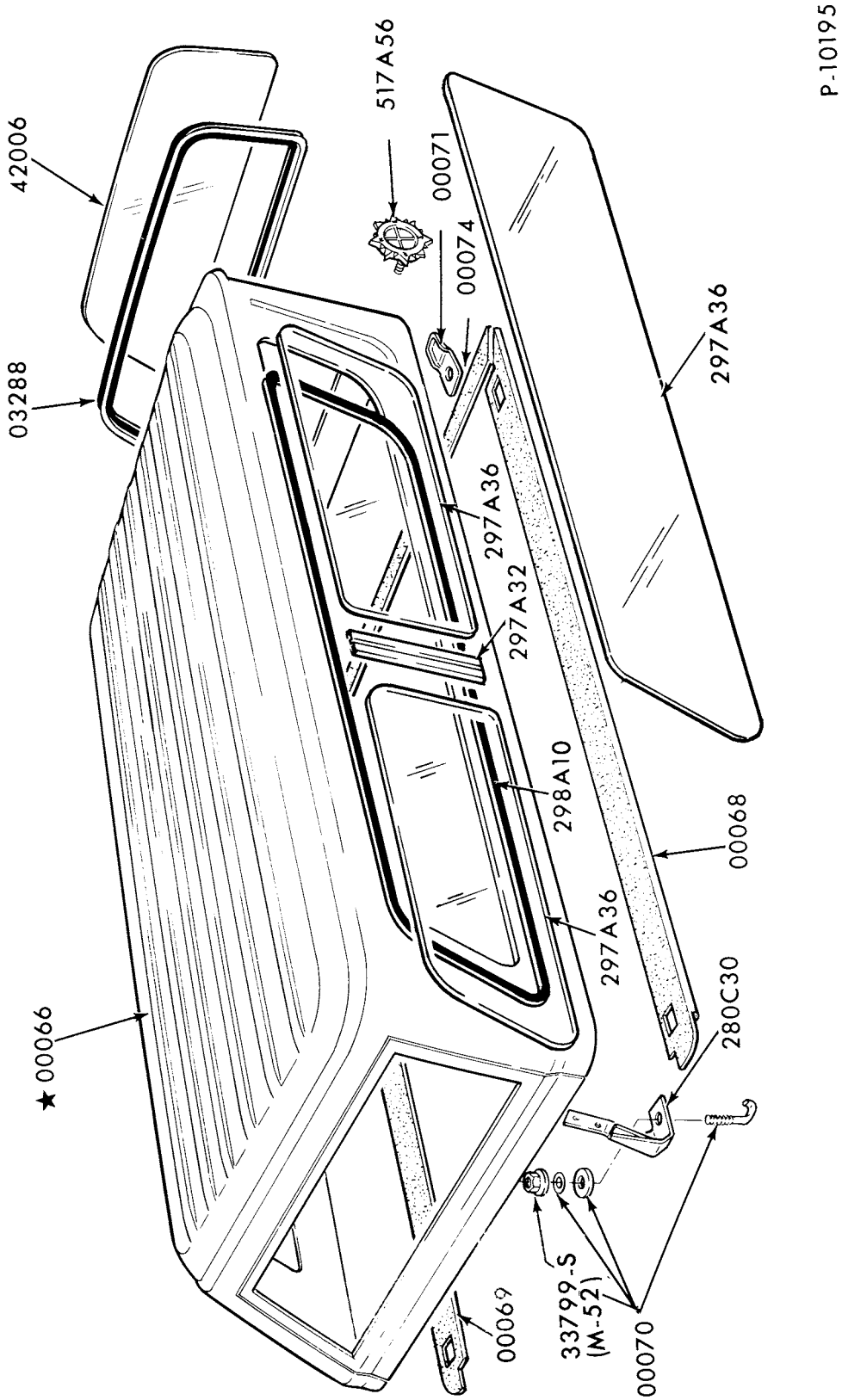

PICKUP BOX COVER (w/o SLIDING WINDOWS)
1973/ F100/350-BODY TYPE 99--8' BOX

COPYRIGHT © 1979 FORD MOTOR COMPANY · DEARBORN, MICHIGAN

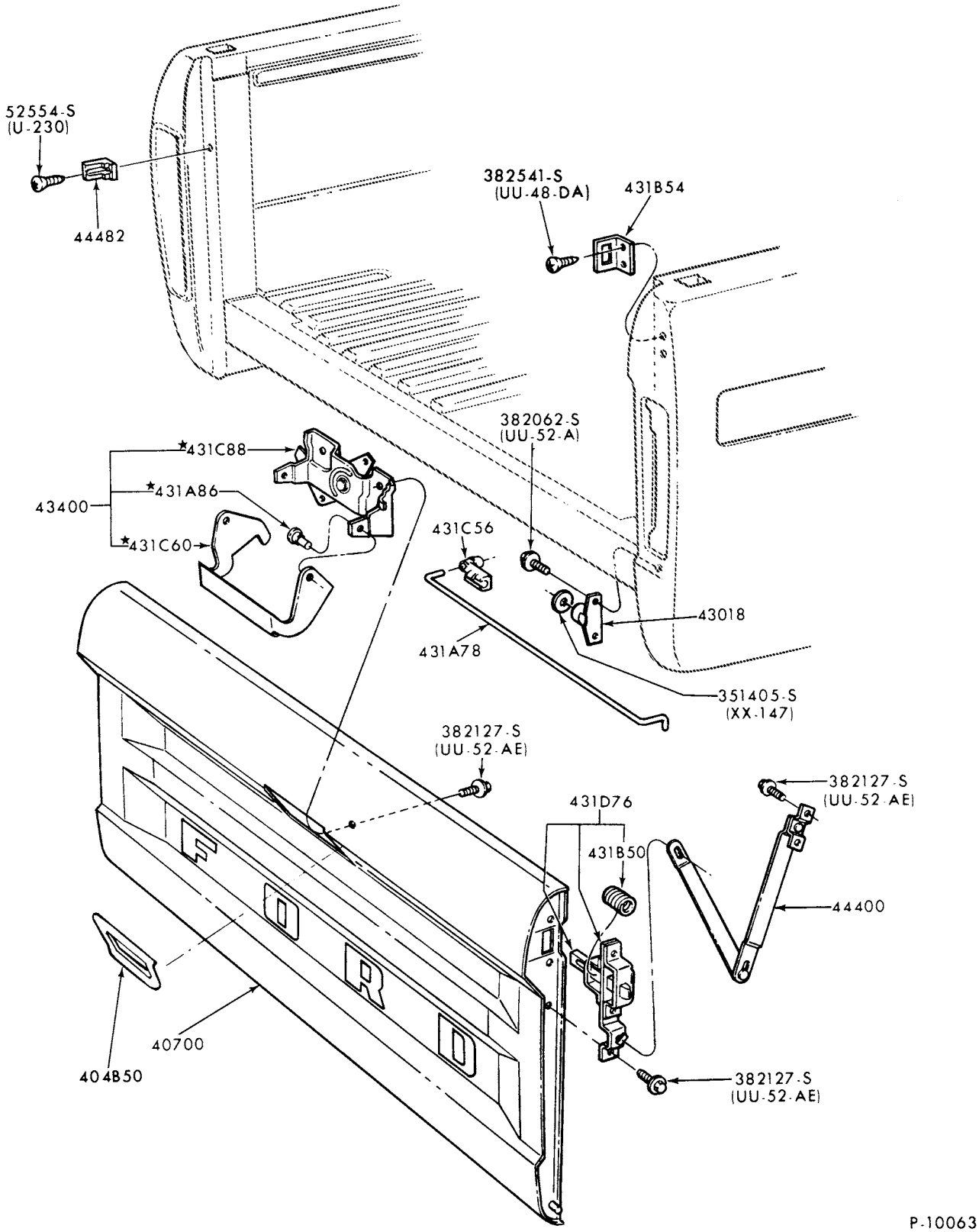

TAILGATE, HINGE and LATCH PARTS
1973/ F100/350-BODY TYPE 99

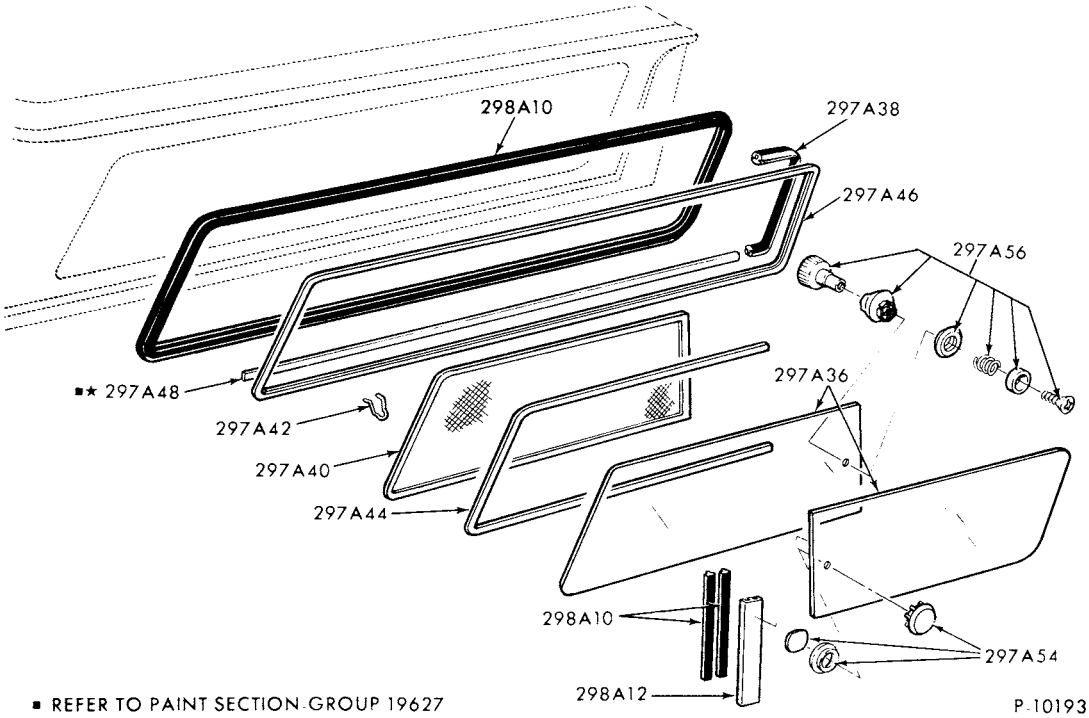

SLIDING WINDOW PARTS (PICKUP BOX COVER SIDE)
1973/ F100/350-BODY TYPE 99--8' BOX

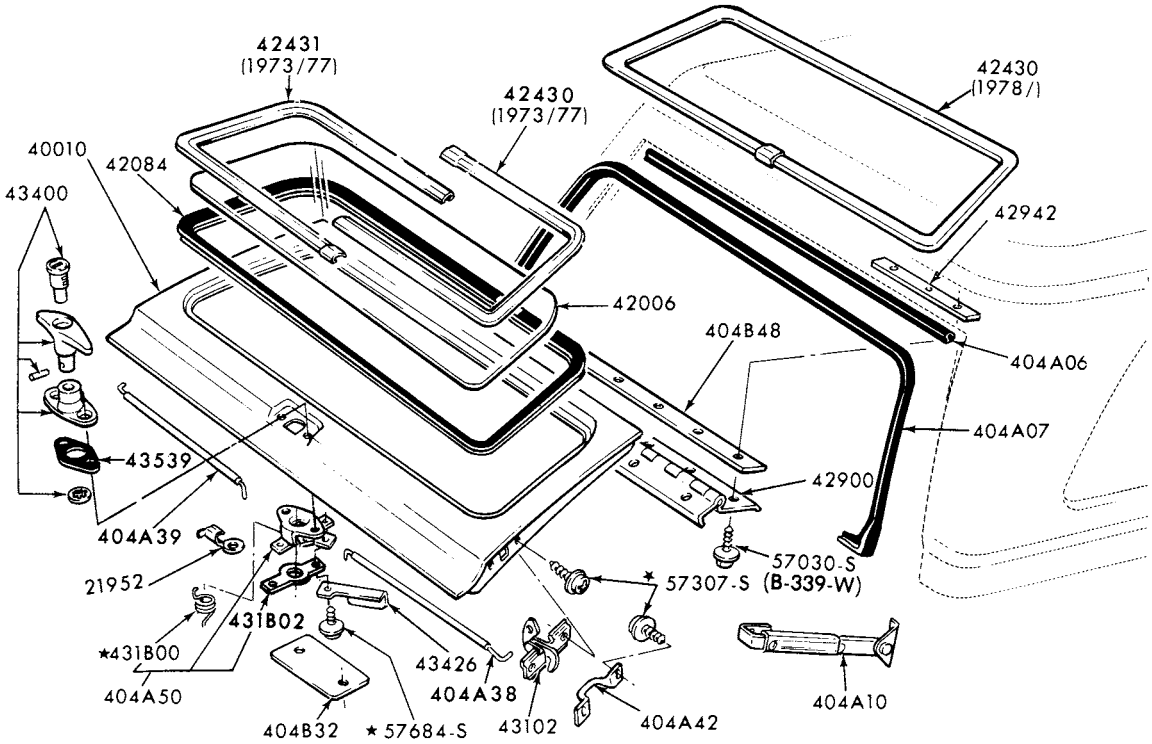

LIFTGATE PARTS (PICKUP BOX COVER)
1973/ F100/350-BODY TYPE 99--8' BOX

COPYRIGHT © 1979 - FORD MOTOR COMPANY - DEARBORN, MICHIGAN

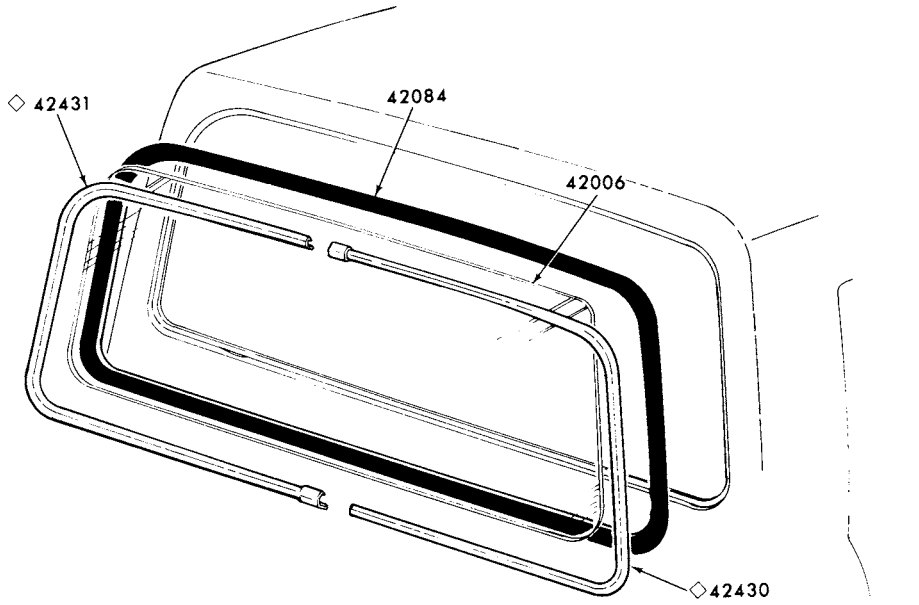

◇ REFER TO GROUP IN EXTERIOR MOULDING SECTION

BACK WINDOW PARTS - w/o SLIDING WINDOW
1973/77 F100/500 and 1978/ F100/350

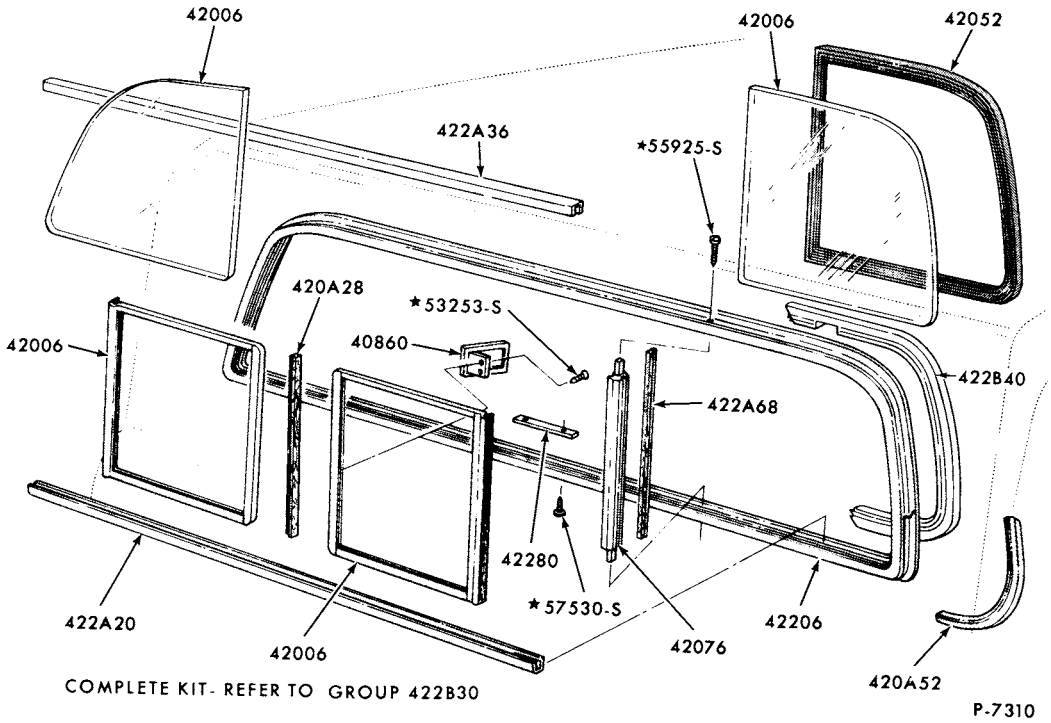

COMPLETE KIT- REFER TO GROUP 422B30

BACK WINDOW PARTS - w/SLIDING WINDOW
1973/77 F100/500-BODY TYPE 81 and 1978/ F100/350-BODY TYPE 81

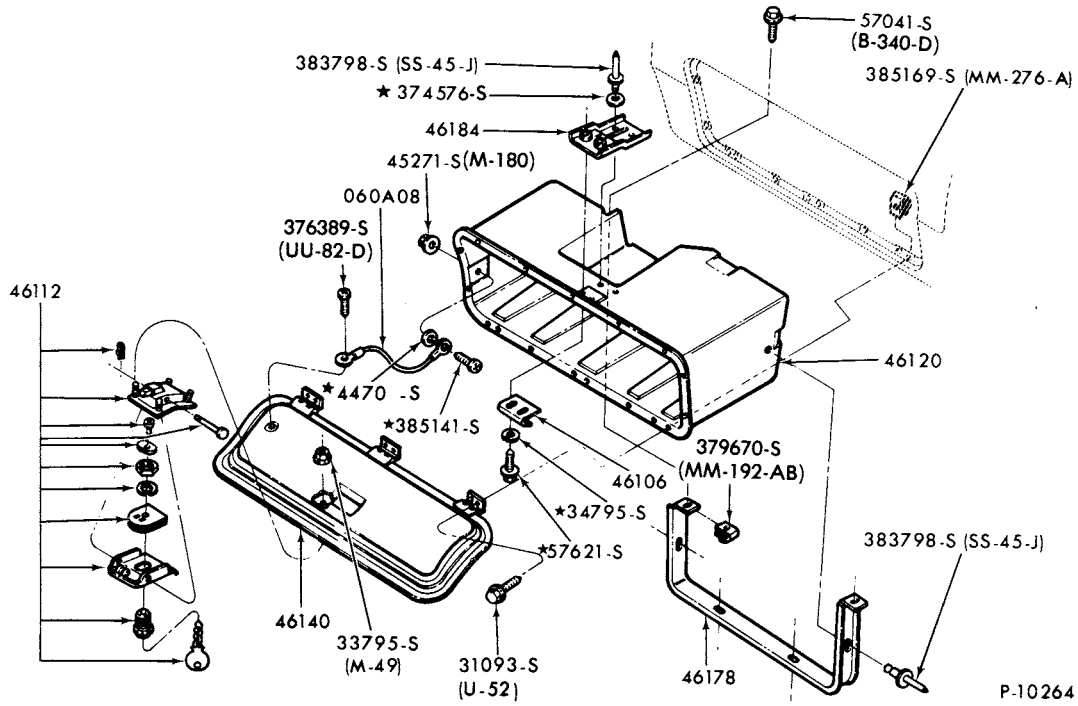

TOOL STORAGE COMPARTMENT
1973/ F100/350-BODY TYPE 99

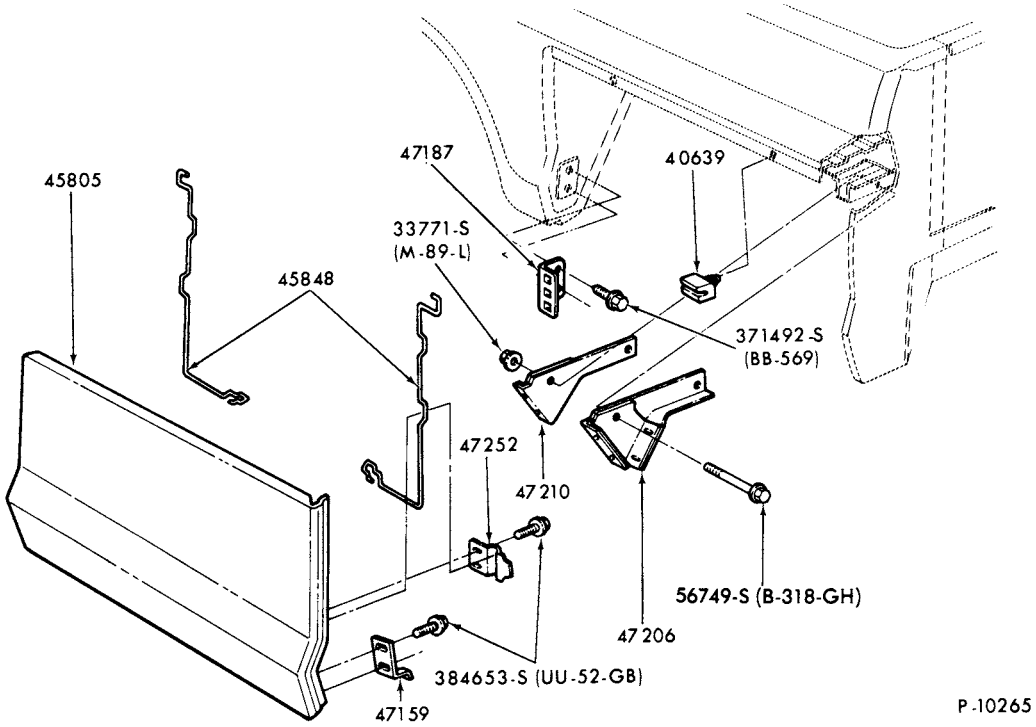

SPARE TIRE STORAGE
1973/ F250/350-BODY TYPE 99

COPYRIGHT © 1979 FORD MOTOR COMPANY - DEARBORN, MICHIGAN

1973/79 TRUCK SERIES 100/500

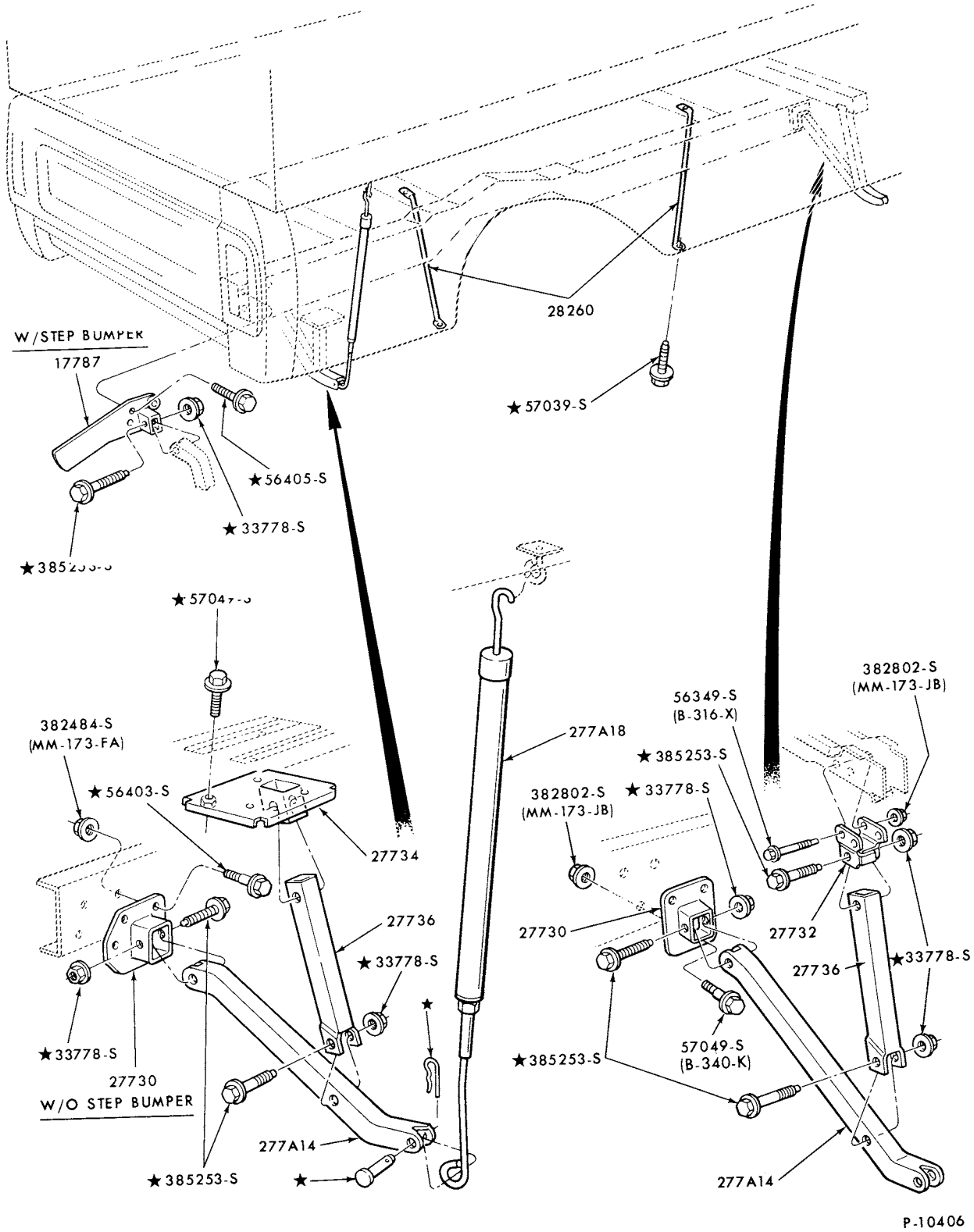

CAMPER TIE DOWN PARTS
1973/76 F250/350

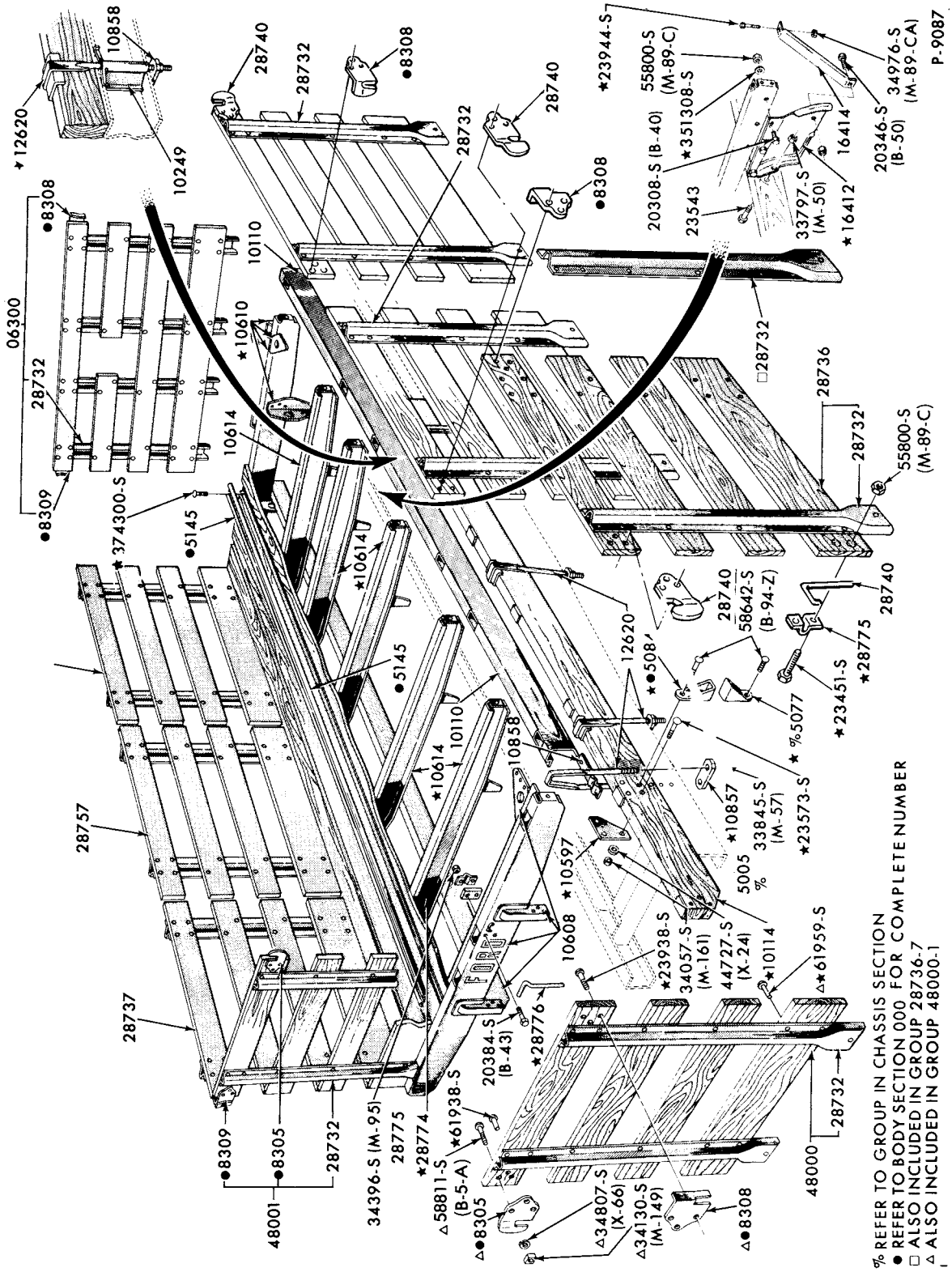

PLATFORM and RACK PARTS
1973/74 F350

COPYRIGHT © 1979 FORD MOTOR COMPANY · DEARBORN, MICHIGAN

1973/79
TRUCK SERIES 100/500

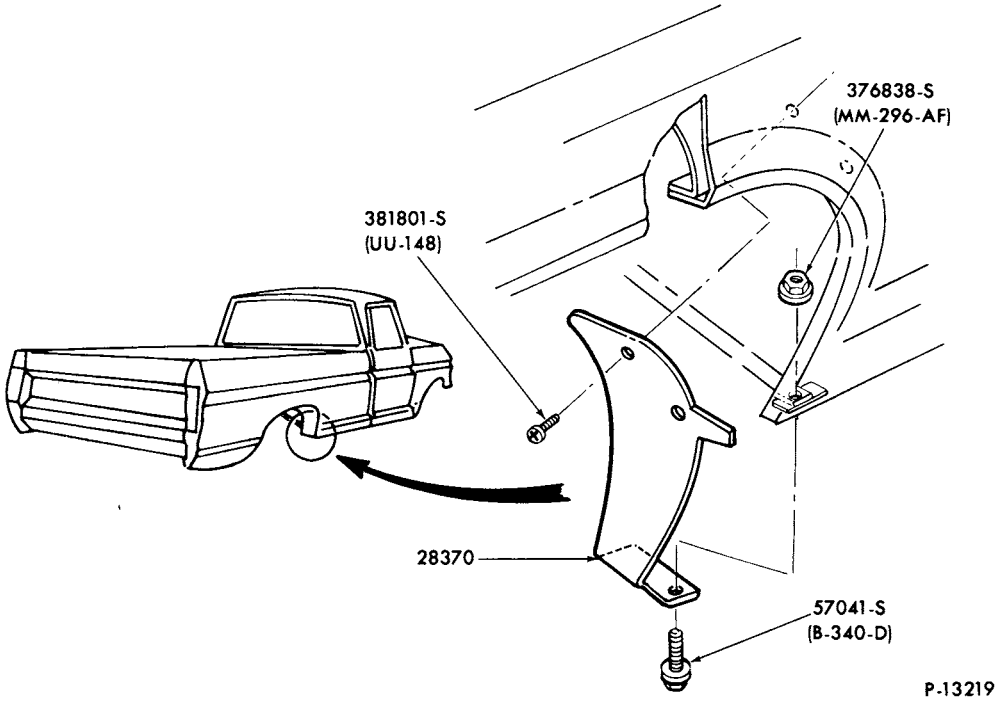

REAR SPLASH SHIELDS
1976/ F100/350

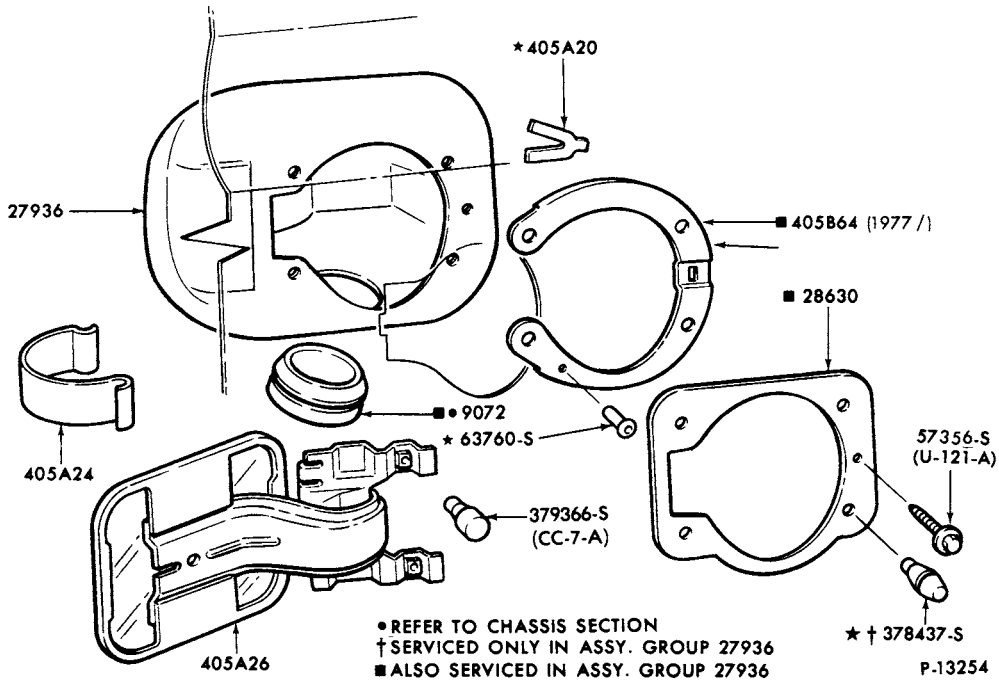

FUEL FILLER DOOR
1977/ F100/350

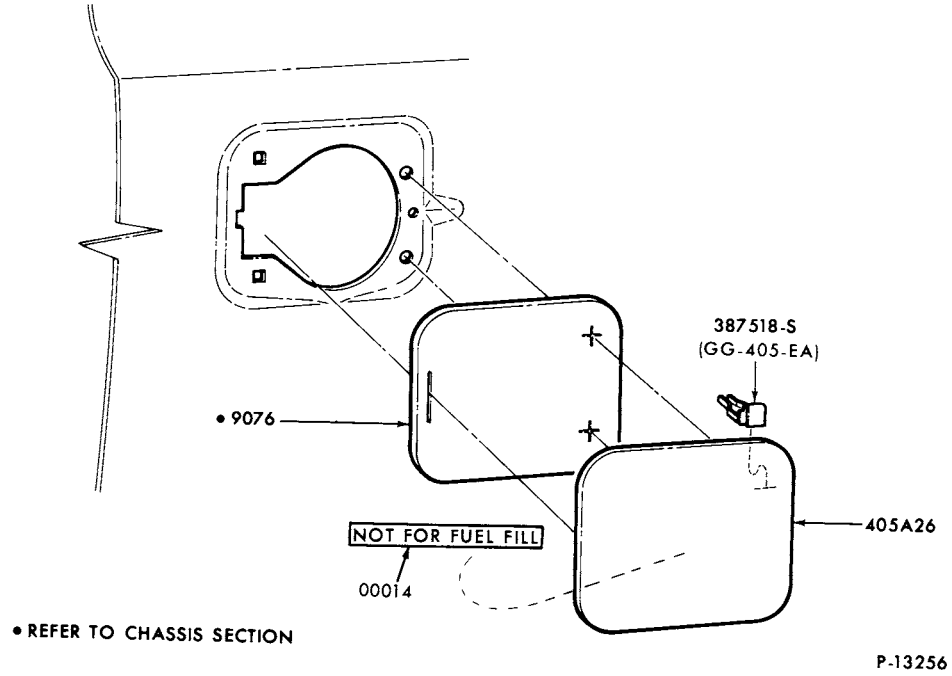

FUEL FILLER COVER
1977/79 F100/350

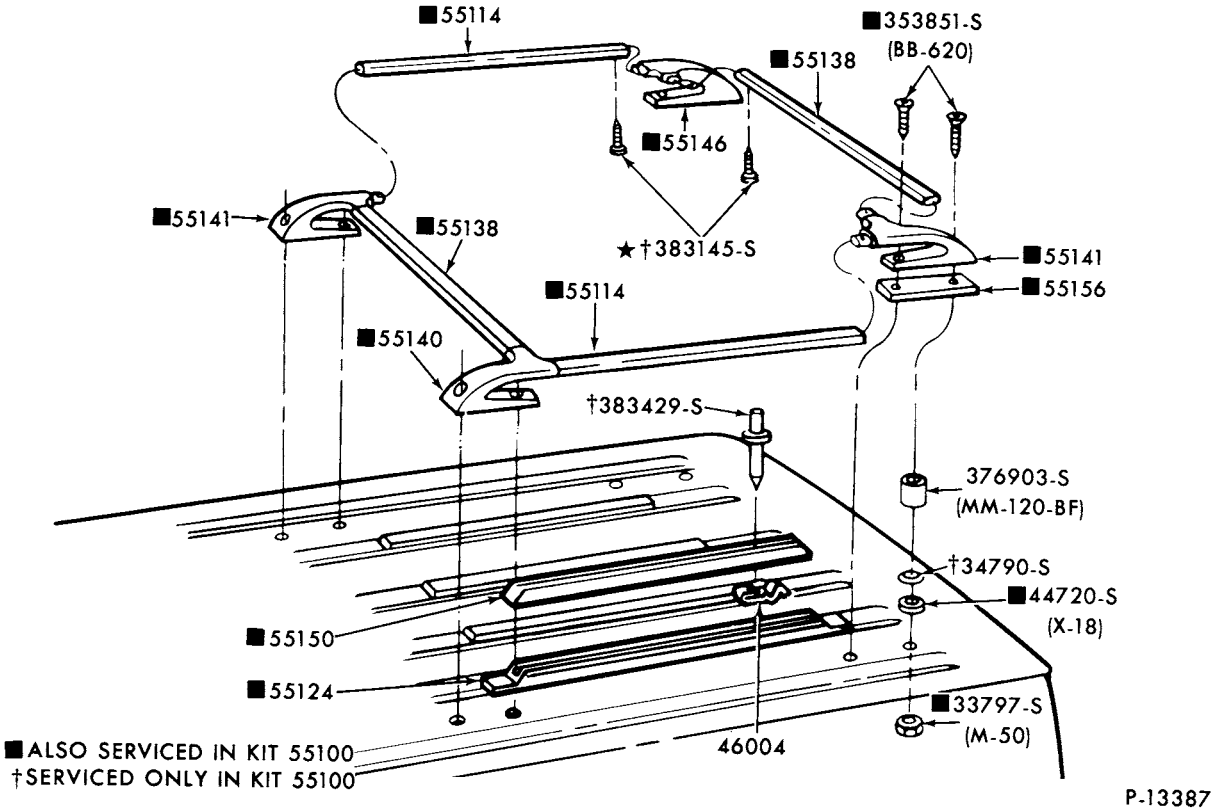

LUGGAGE CARRIER and RELATED PARTS (ROOF MOUNTED)
1975/77 E100/350

COPYRIGHT © 1979 FORD MOTOR COMPANY—DEARBORN, MICHIGAN

1973/79
TRUCK SERIES 100/500

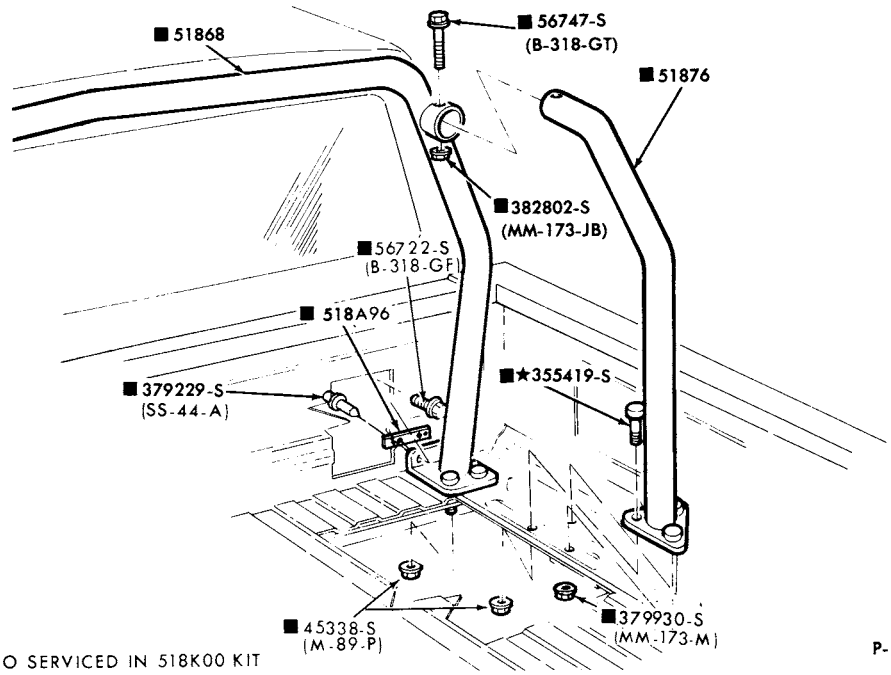

■ALSO SERVICED IN 518K00 KIT

ROLL BAR and RELATED PARTS
1978/79 F100/350 (99)

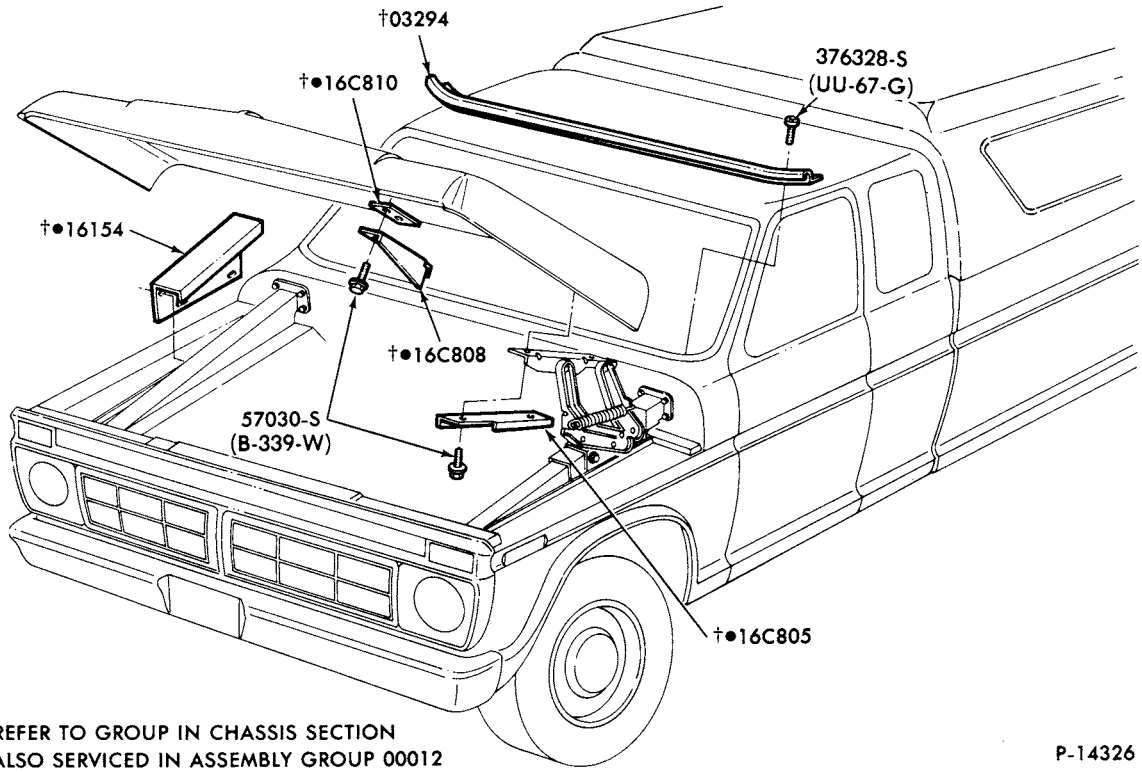

●REFER TO GROUP IN CHASSIS SECTION
†ALSO SERVICED IN ASSEMBLY GROUP 00012

PICK-UP BOX COVER REINFORCEMENT KIT and RELATED PARTS
1978/79 F100/350

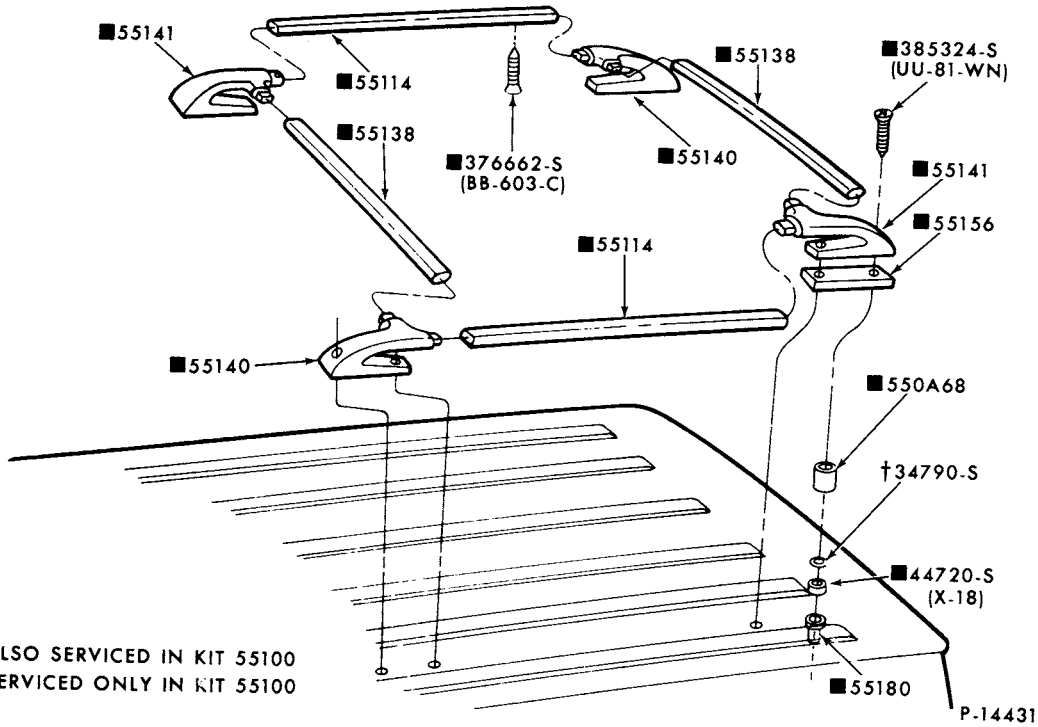

■ALSO SERVICED IN KIT 55100
† SERVICED ONLY IN KIT 55100

ROOF RAIL KIT - SPORT
1975/ ECONOLINE

COPYRIGHT © 1979 FORD MOTOR COMPANY DEARBORN, MICHIGAN

1973/79
TRUCK SERIES 100/500

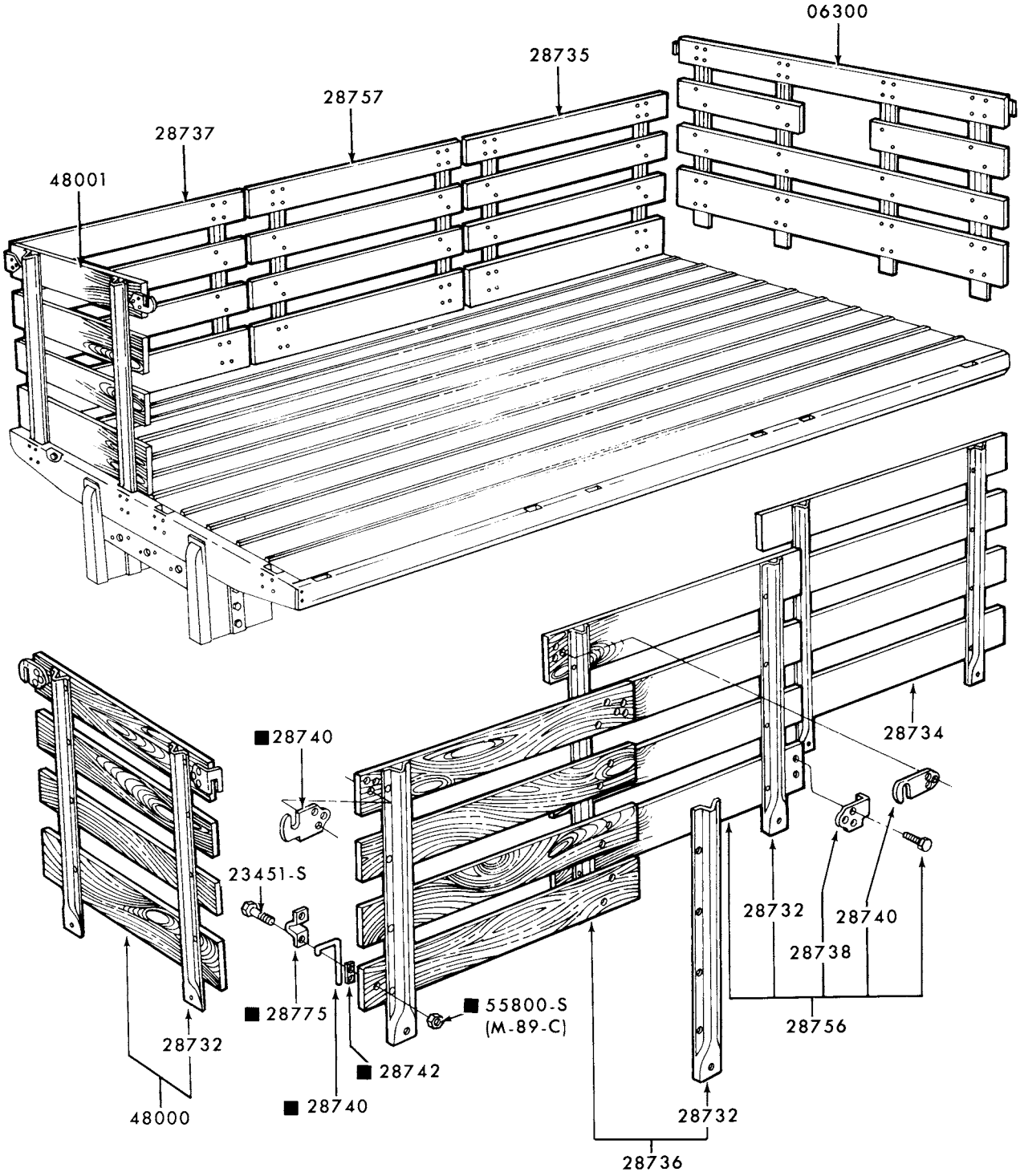

■ ALSO SERVICED IN ASSY. GROUP 28736-7

P-14987

RACK PARTS
1975/ F350

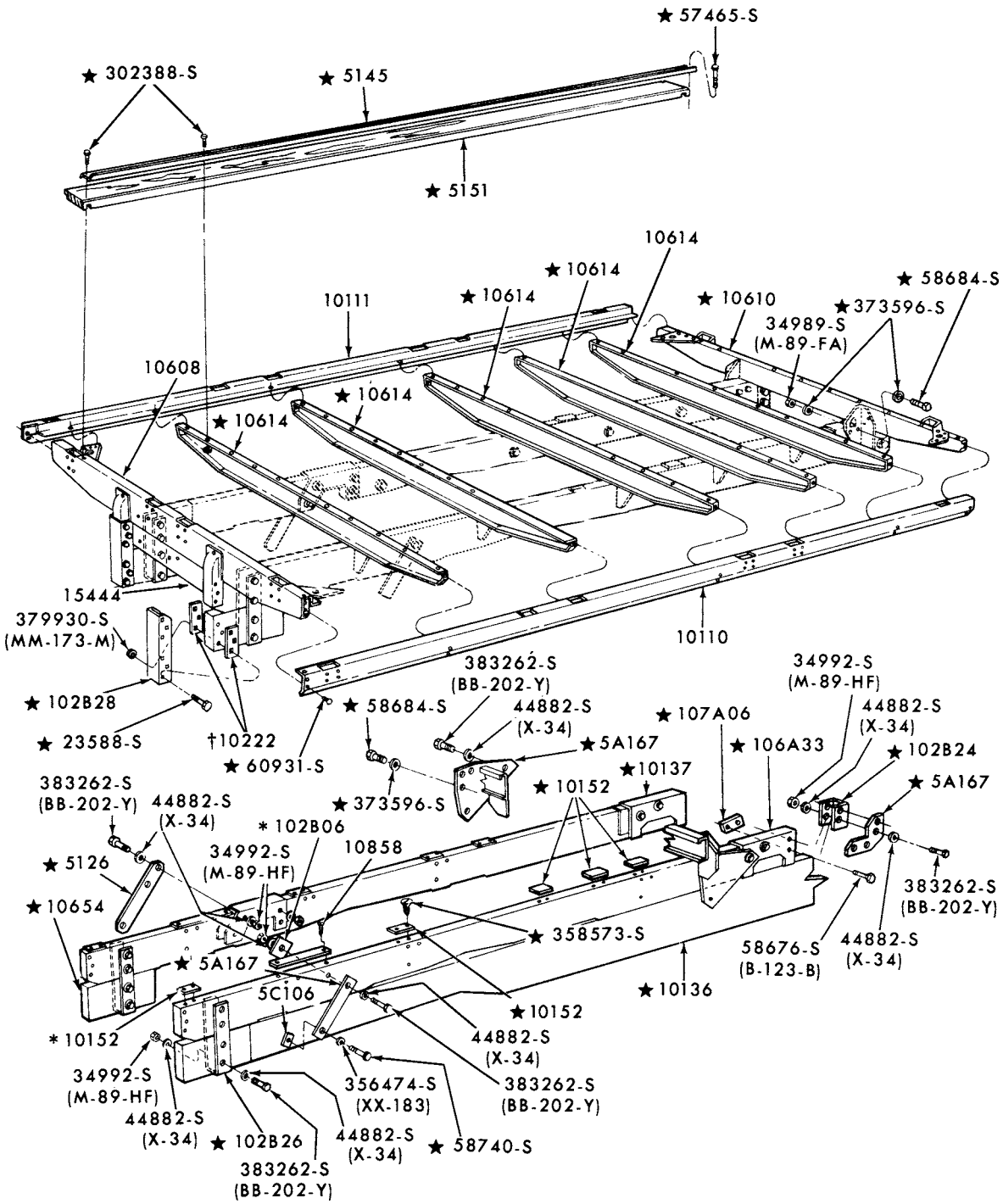

P-14991

PLATFORM PARTS
1975/ F350

COPYRIGHT © 1979 FORD MOTOR COMPANY, DEARBORN, MICHIGAN

60012-COMPLETE DRIVER SEAT ASSEMBLY INCLUDING MECHANISM

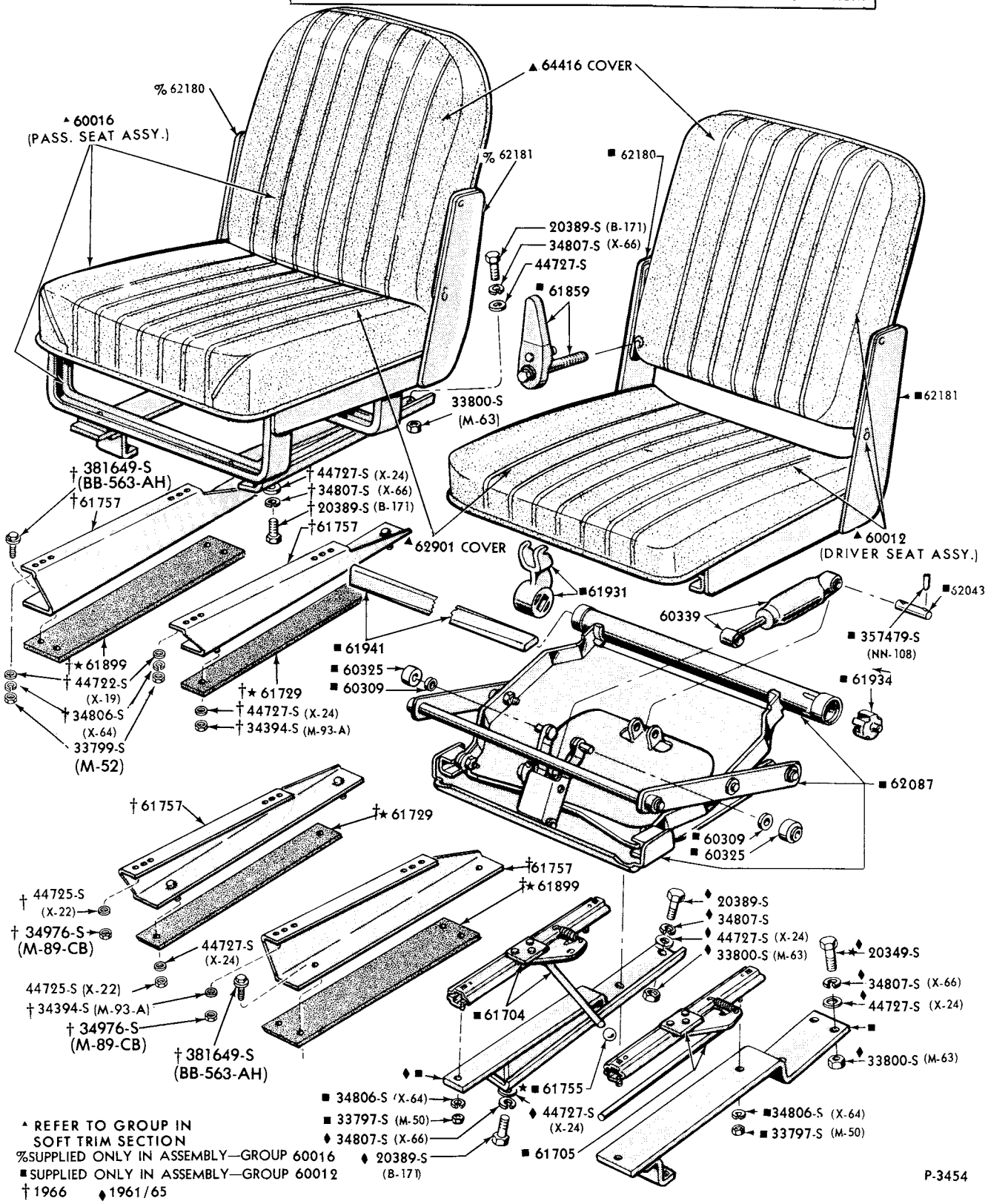

FRONT SEAT PARTS (DRIVER and PASSENGER BOSTROM)
1973/77 F500

COPYRIGHT © 1979 FORD MOTOR COMPANY DEARBORN, MICHIGAN

1973/79 TRUCK SERIES 100/500

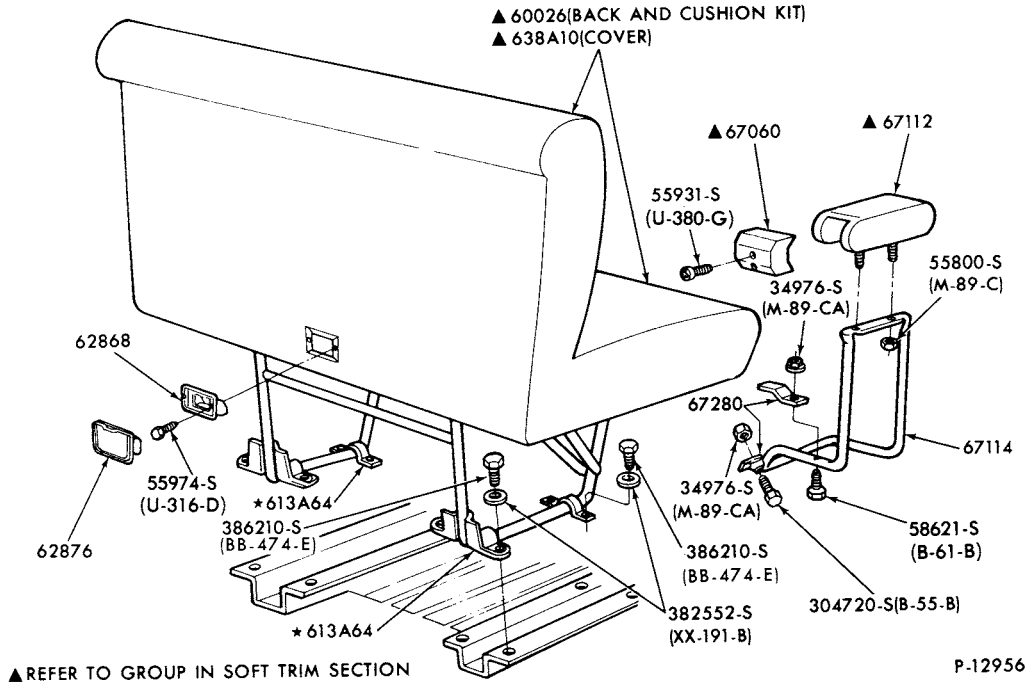

REAR SEAT PARTS (W/ARMREST)
1973/ E100/350-BODY TYPE 82

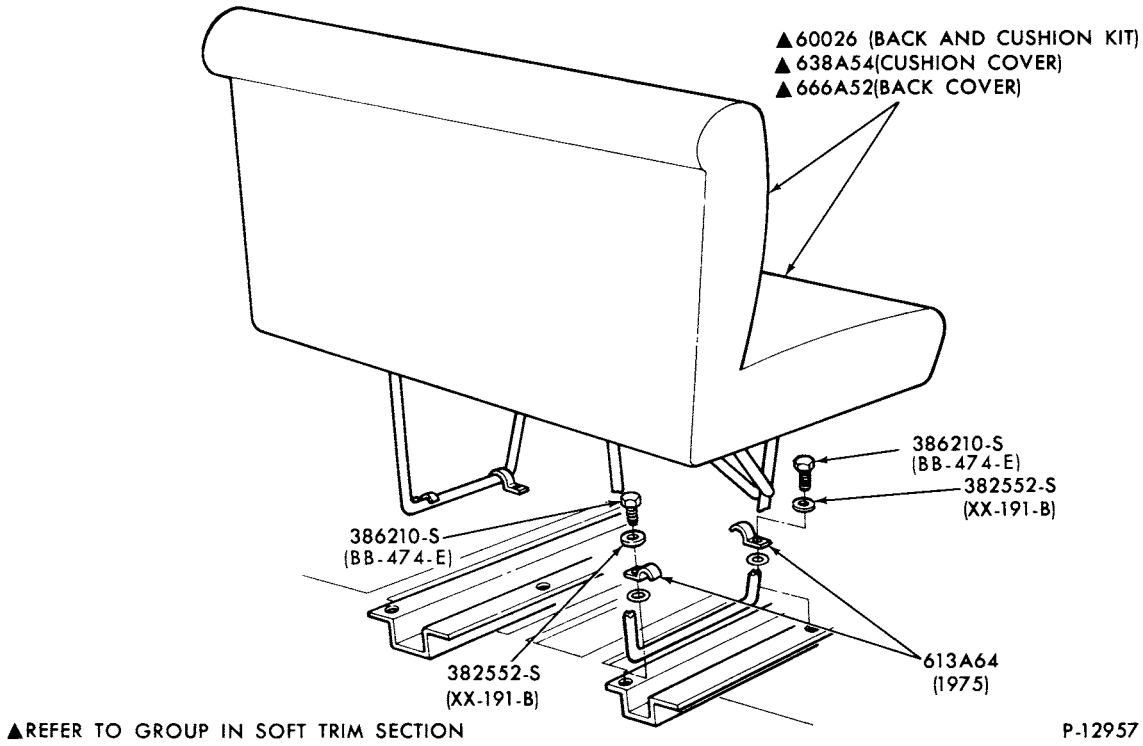

REAR SEAT PARTS (W/O ARMREST-4TH SEAT)
1973/ E100/350-BODY TYPE 82

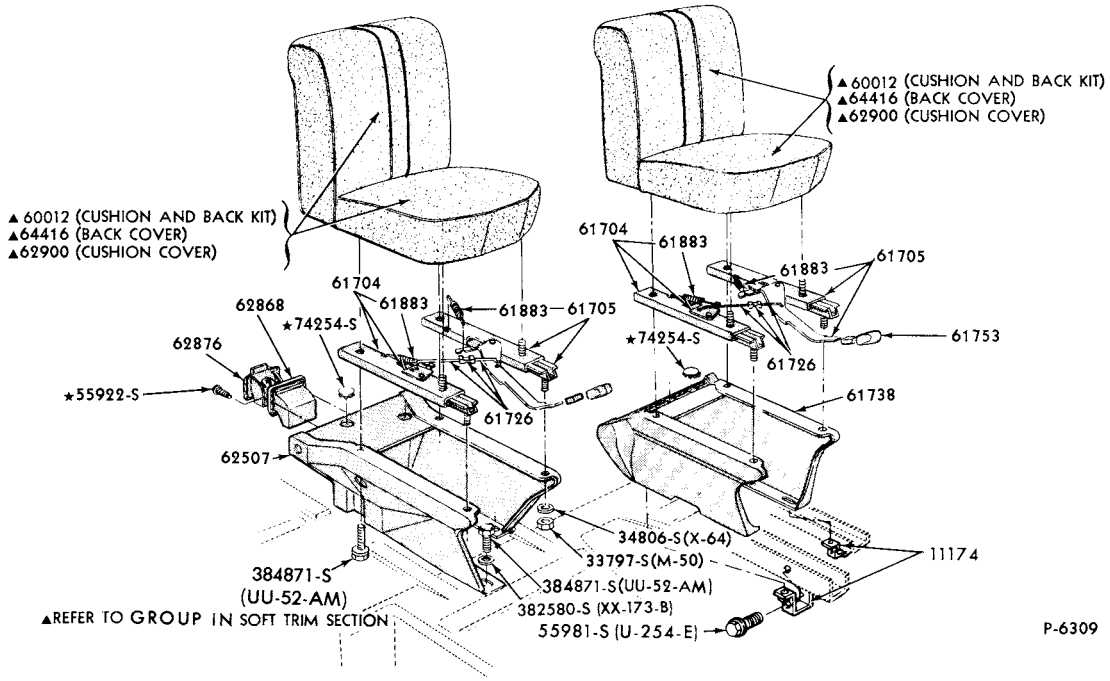

FRONT SEAT PARTS (NON-FOLDING)
1973/74 E100/350

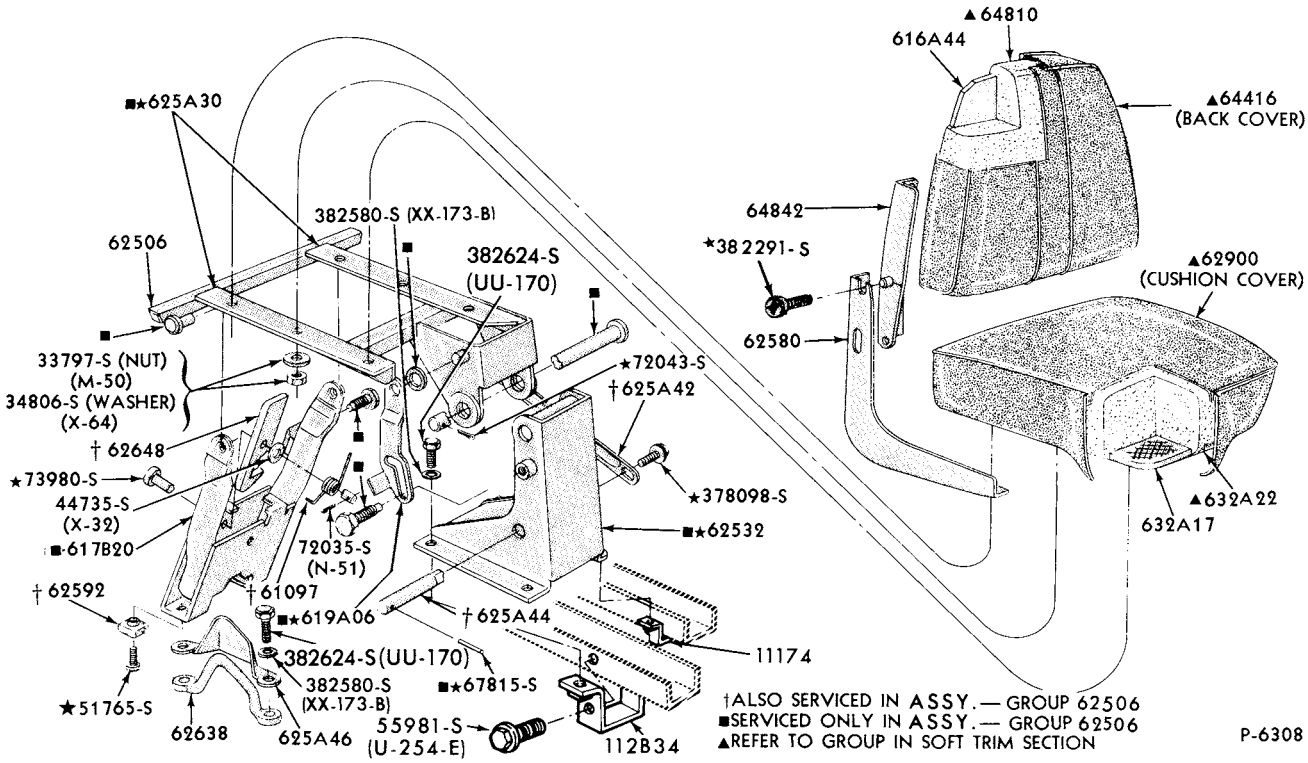

FRONT SEAT PARTS (PASSENGER FOLDING)
1973/74 E100/300-BODY TYPE 89

COPYRIGHT © 1979 FORD MOTOR COMPANY—DEARBORN, MICHIGAN

1973/79 TRUCK SERIES 100/500

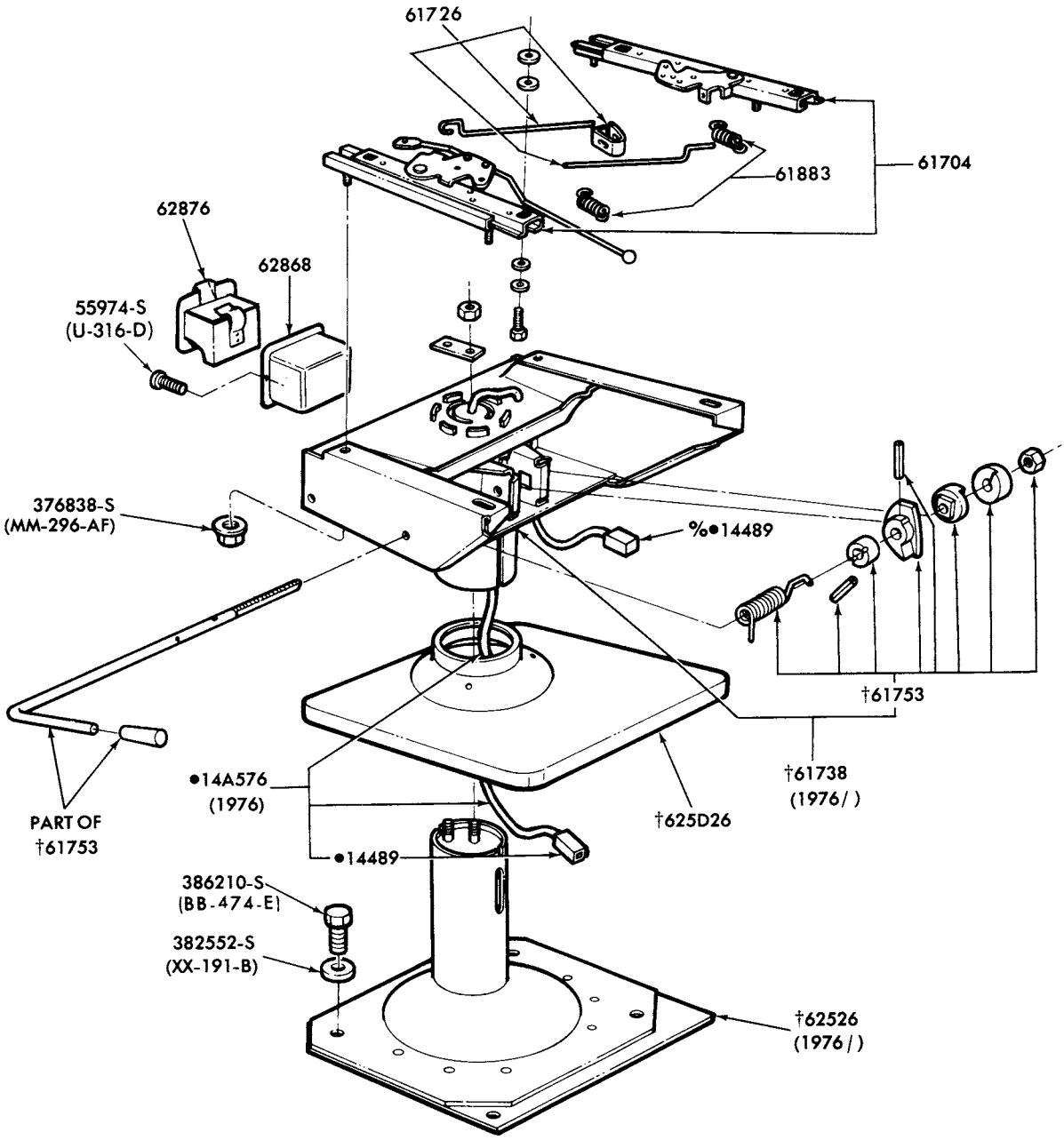

%ALSO SERVICED IN ASSY. GROUP •14A576
•REFER TO GROUP IN CHASSIS SECTION
†ALSO SERVICED IN ASSY. GROUP 60094

P-12393

FRONT SEAT PARTS-CAPTAINS CHAIR-LOWER HALF- BOSTROM
1975/ E100/350

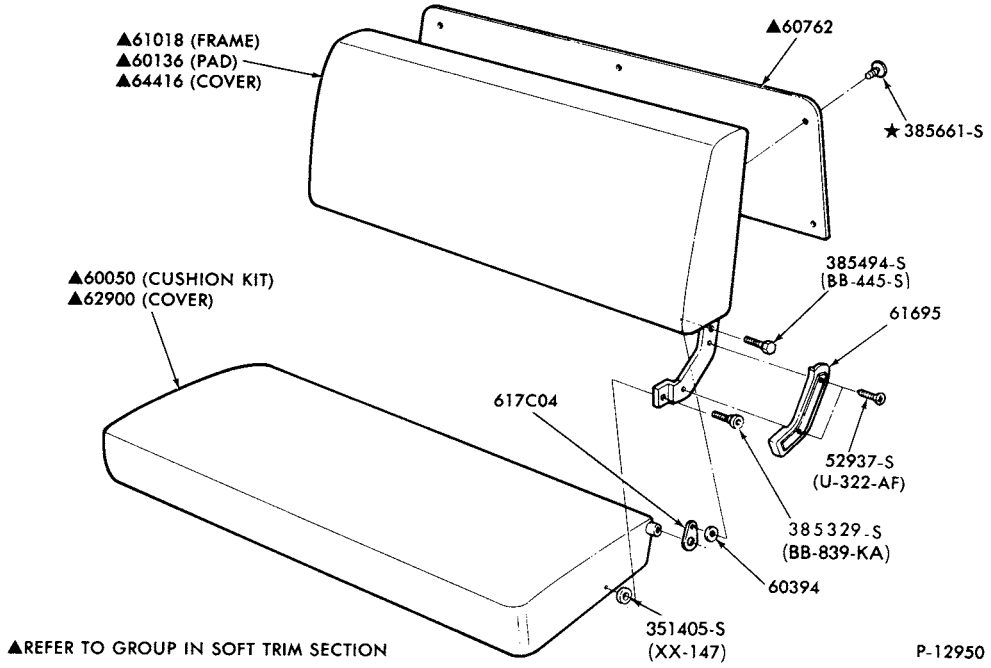

FRONT SEAT PARTS (FULL WIDTH--NON-FOLDING-UPPER HALF)
1973/77 F100/500 and 1978/ F100/350 (CREW CAB)

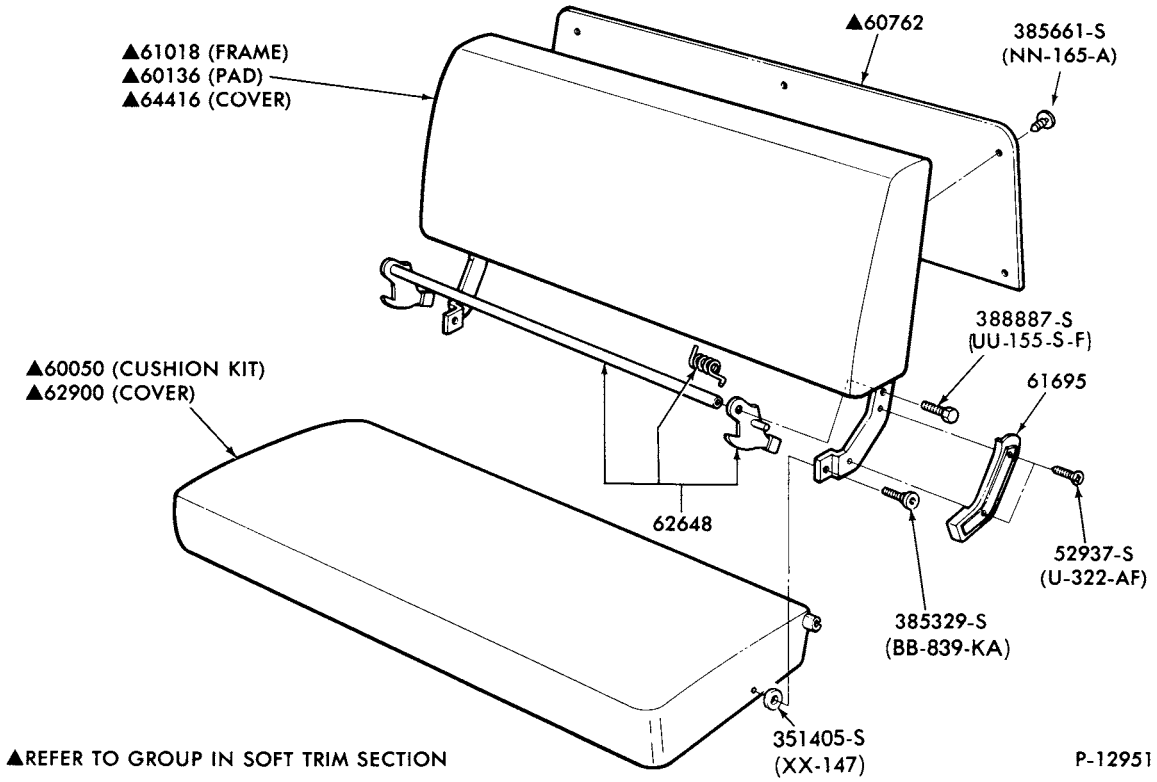

FRONT SEAT PARTS (FULL WIDTH--FOLDING-UPPER HALF)
1973/77 F100/500 and 1978/ F100/350 (REGULAR CAB)

COPYRIGHT © 1979 FORD MOTOR COMPANY DEARBORN, MICHIGAN

1973/79
TRUCK SERIES 100/500

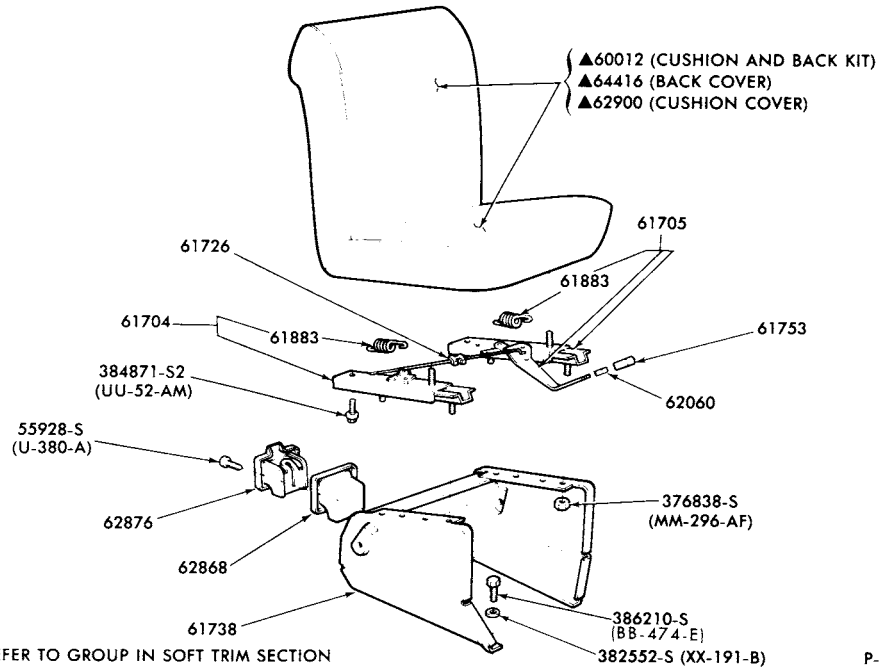

FRONT SEAT PARTS (NON-FOLDING-MOVEABLE)
1975/ E100/350

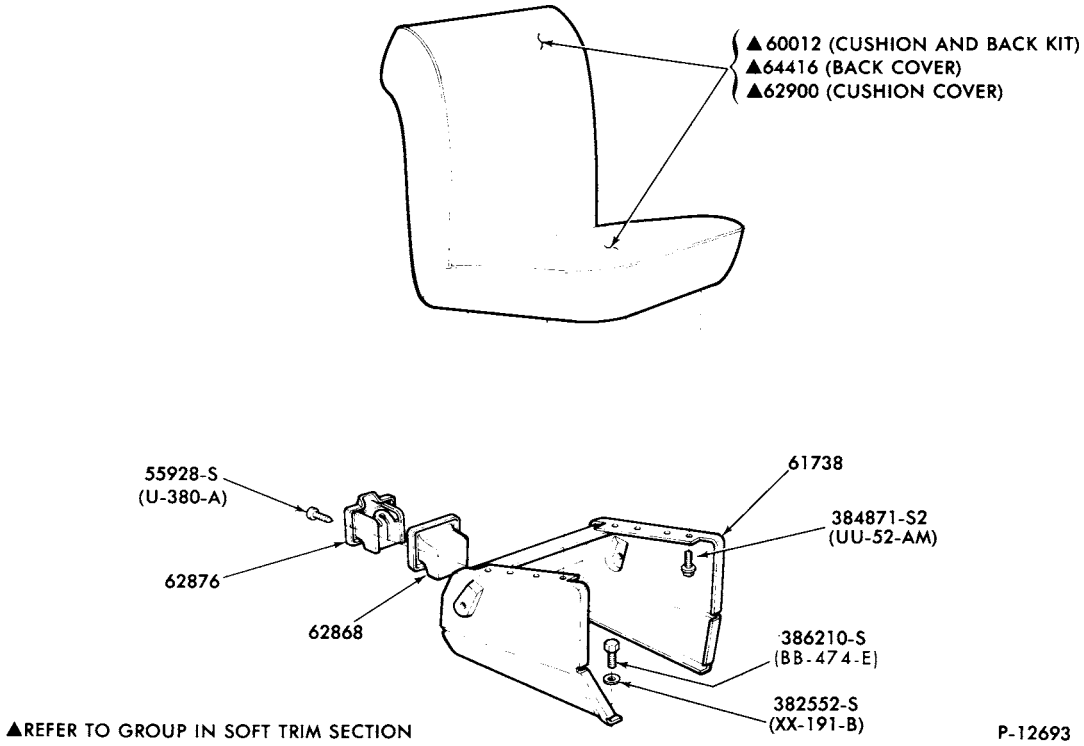

FRONT SEAT PARTS (NON-FOLDING-STATIONARY)
1975/ E100/350

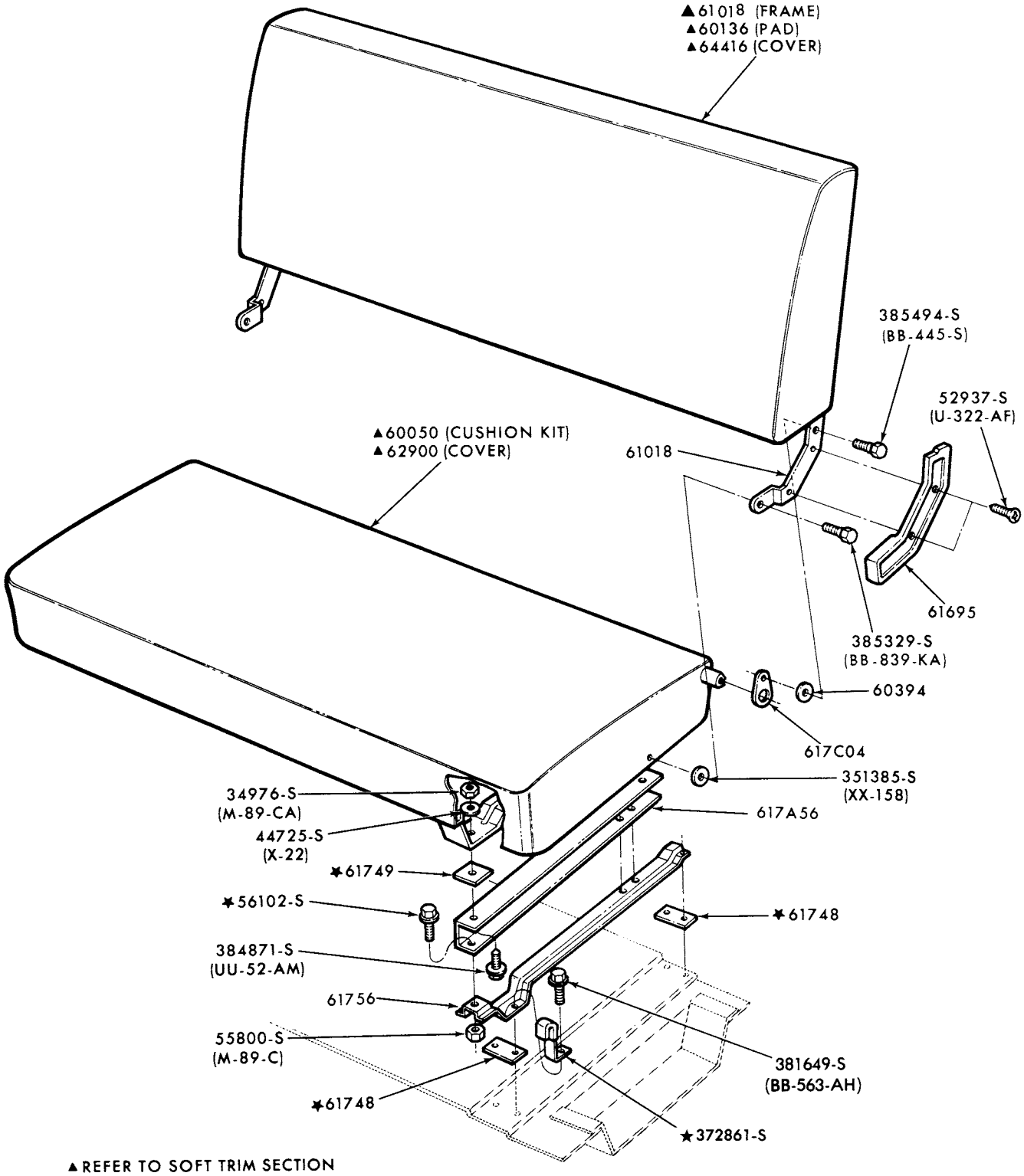

▲REFER TO SOFT TRIM SECTION

P-11156

REAR SEAT PARTS
1973/ F250/500 (CREW CAB)

COPYRIGHT © 1979 - FORD MOTOR COMPANY - DEARBORN, MICHIGAN

1973/79
TRUCK SERIES 100/500

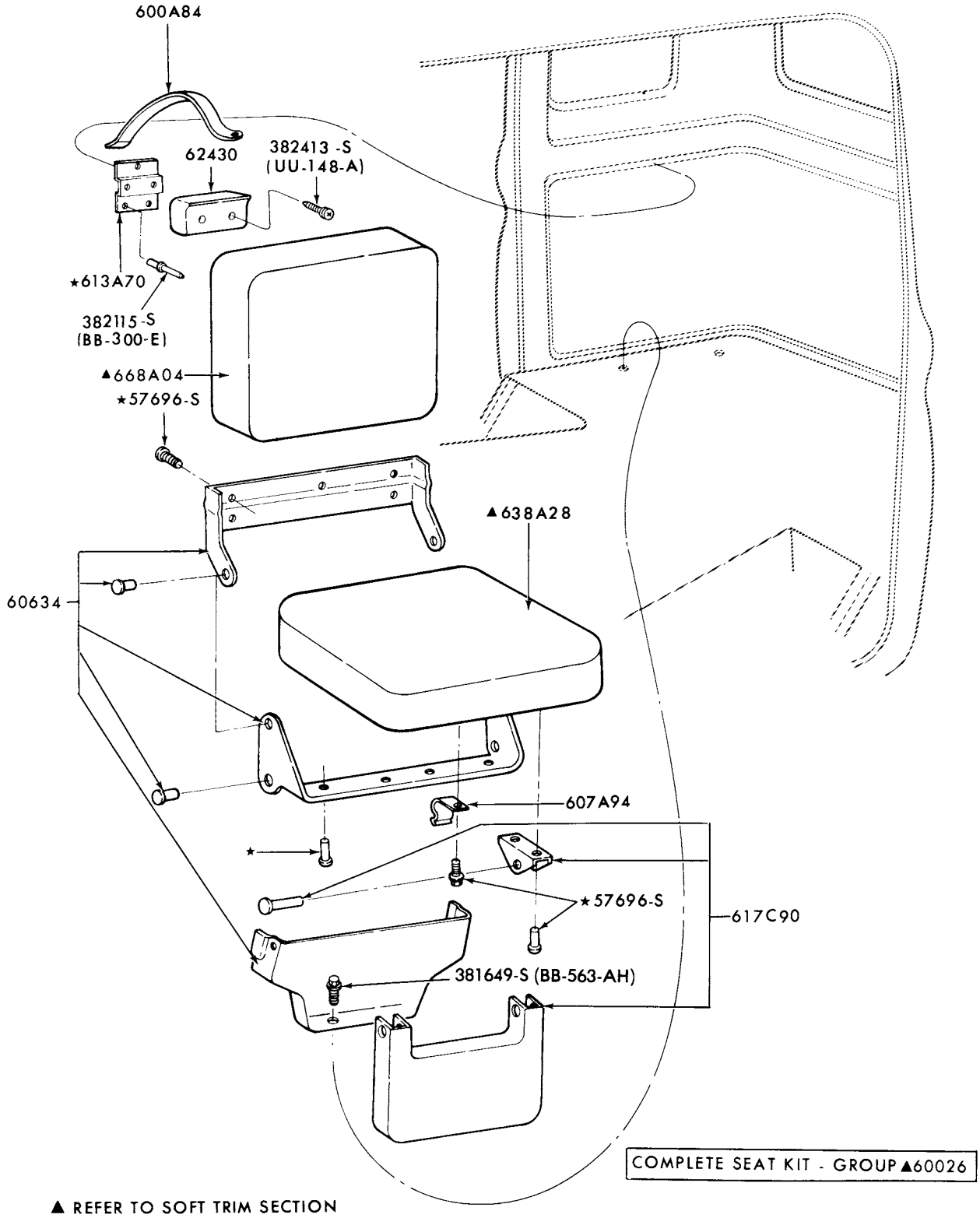

▲ REFER TO SOFT TRIM SECTION

P-11473

REAR SEAT PARTS (CENTER FACING)
1974/ F100/350 (SUPER CAB)

1973/79
TRUCK SERIES 100/500

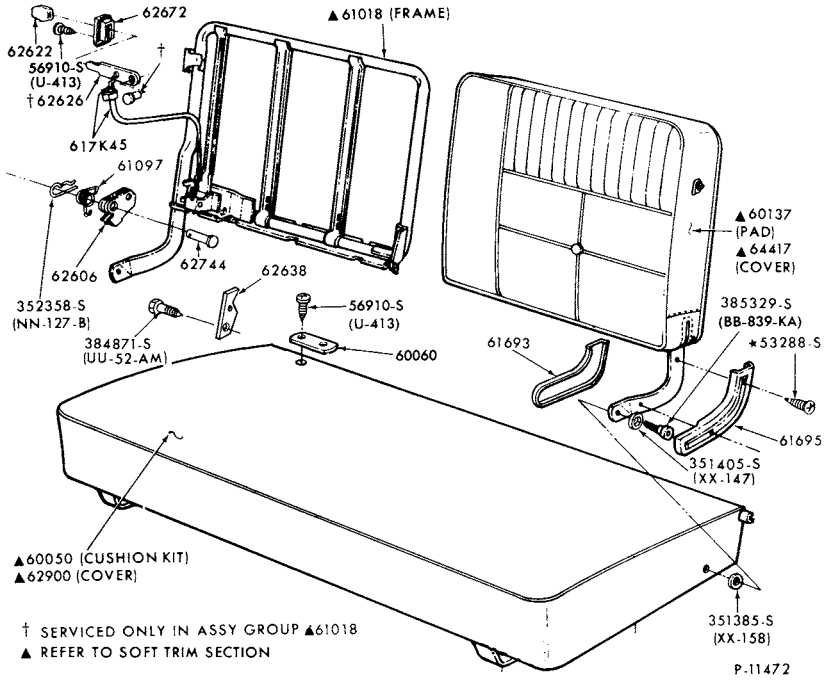

FRONT SEAT PARTS (UPPER HALF)
1974/ F100/350 (SUPER CAB)

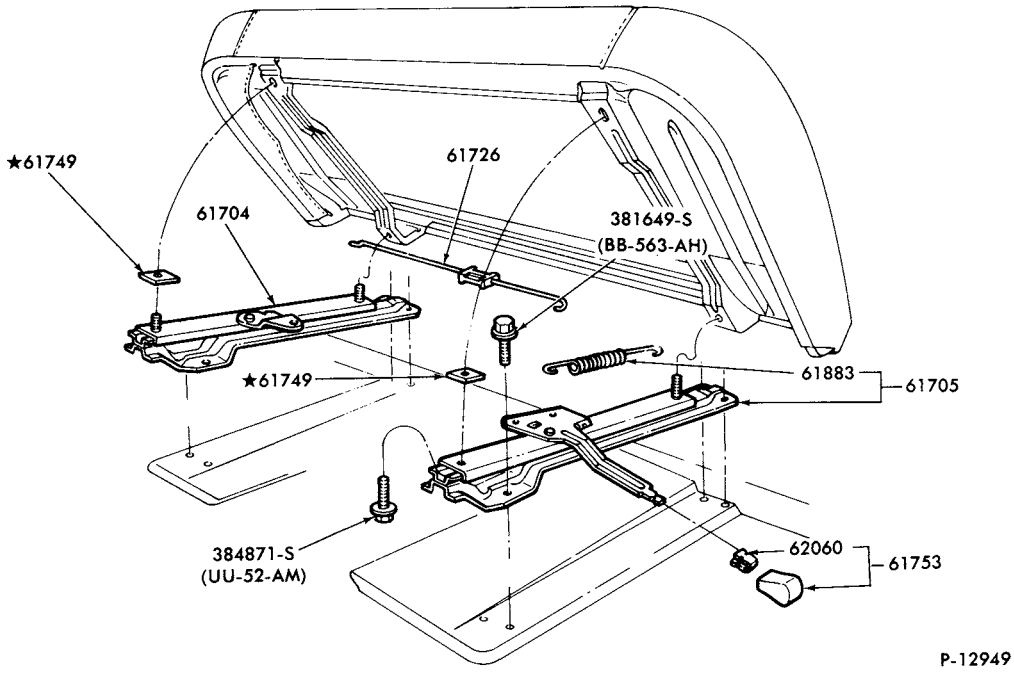

FRONT SEAT PARTS (LOWER HALF)
1973/77 F100/500 and 1978/ F100/350

COPYRIGHT © 1979 FORD MOTOR COMPANY DEARBORN, MICHIGAN

1973/79 TRUCK SERIES 100/500

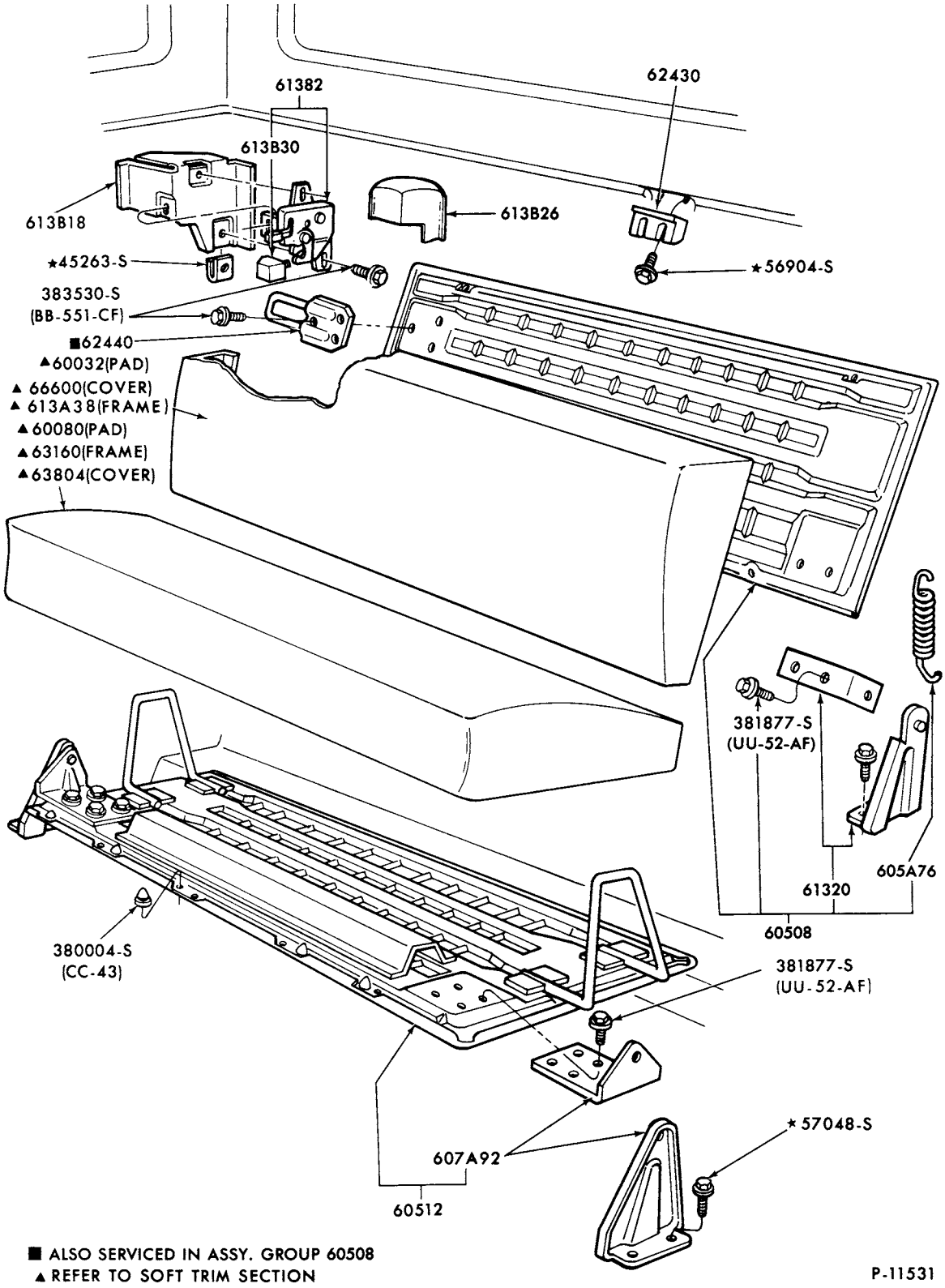

REAR SEAT PARTS (FORWARD FACING)
1974/ F100/350 (SUPER CAB)

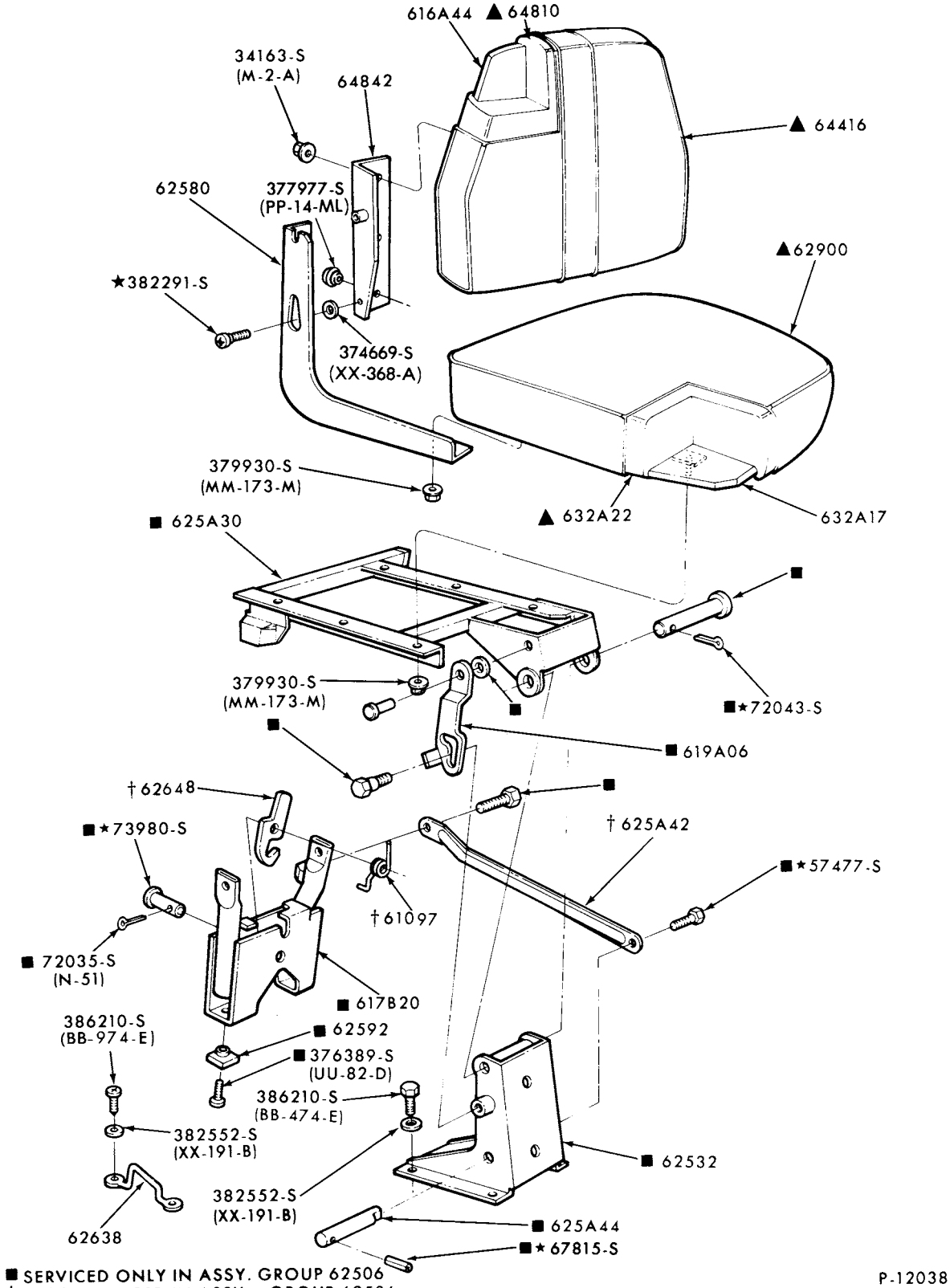

■ SERVICED ONLY IN ASSY. GROUP 62506
† ALSO SERVICED IN ASSY. - GROUP 62506
▲ REFER TO SOFT TRIM SECTION

P-12038

FRONT SEAT PARTS (PASSENGER FOLDING)
1975/ E100/350

COPYRIGHT © 1979 FORD MOTOR COMPANY—DEARBORN, MICHIGAN

1973/79
TRUCK SERIES 100/500

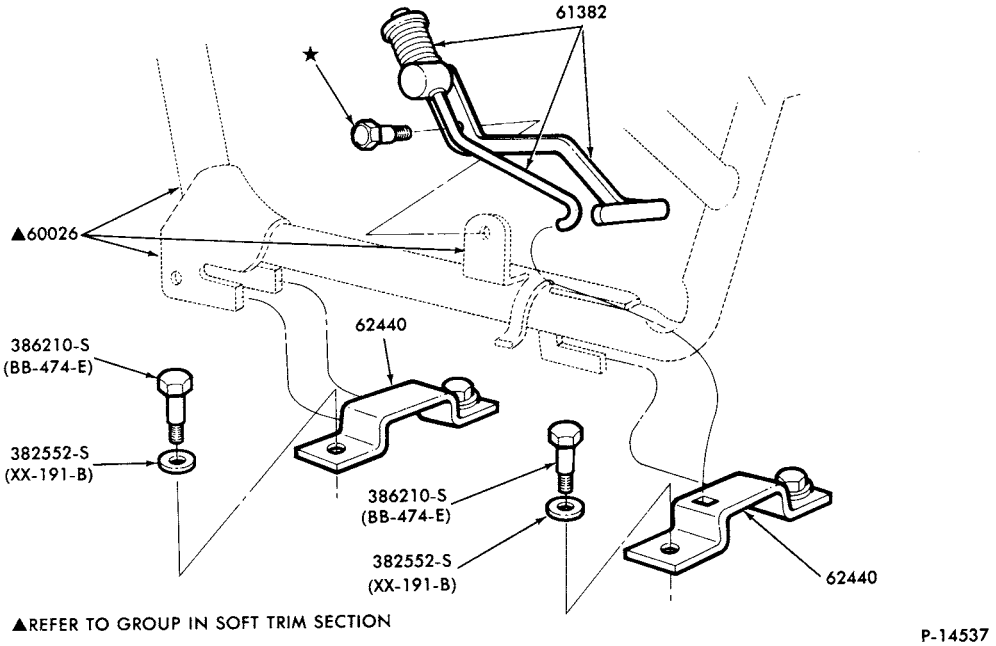

REAR SEAT PARTS (QUICK DISCONNECT)
1978/ E100/350 - BODY TYPE 82

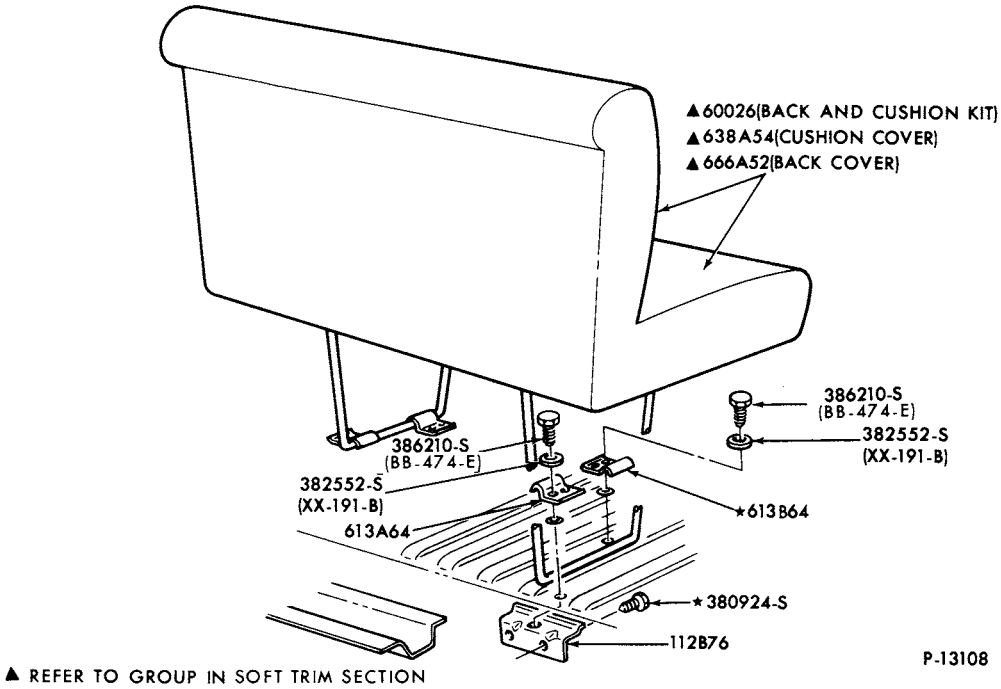

REAR SEAT PARTS (w/o ARM REST-5TH SEAT)
1978/ E100/350-BODY TYPE 82

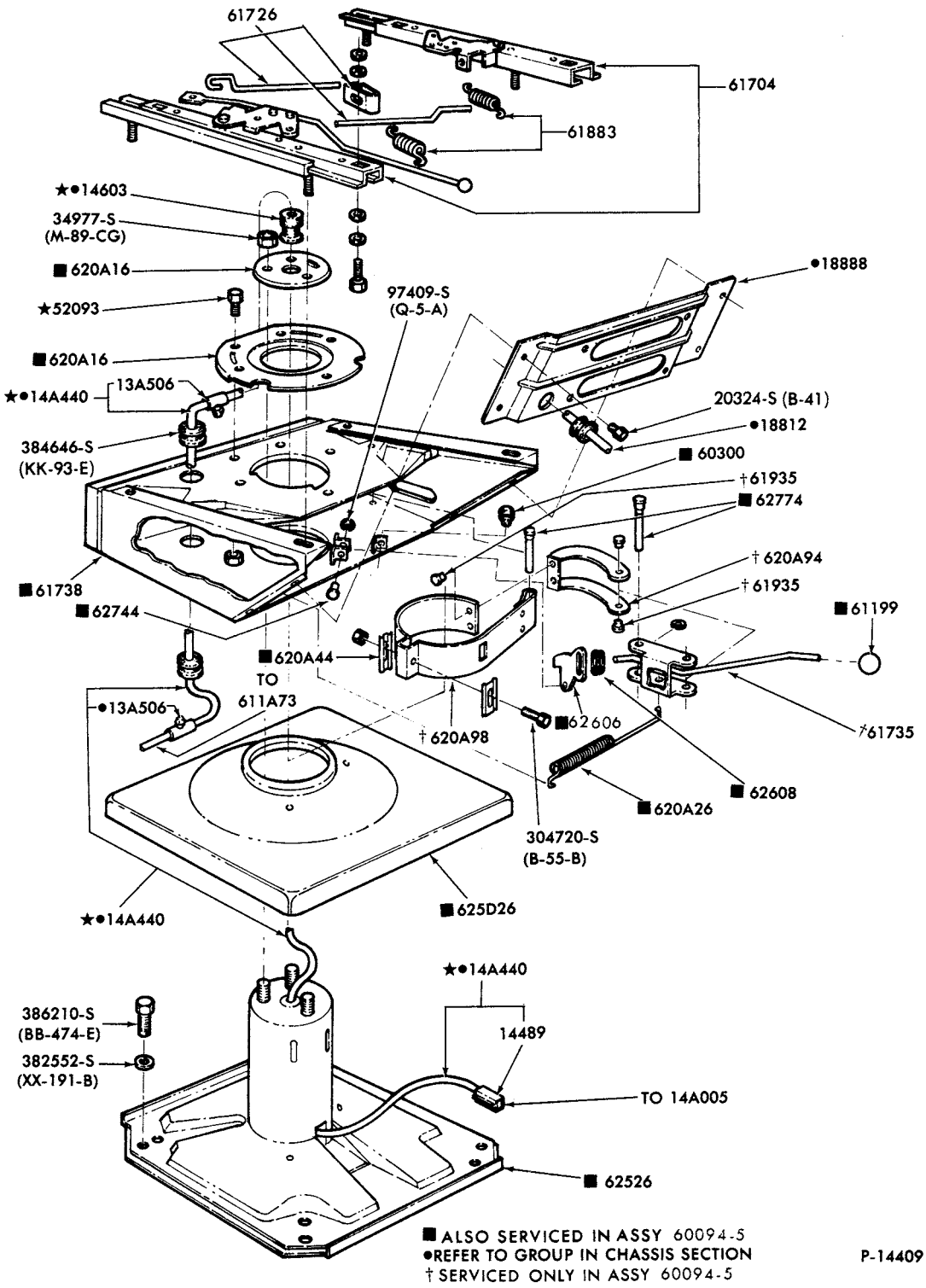

FRONT SEAT PARTS-CAPTAINS CHAIR-LOWER HALF-LEAR SIEGLER
1978/79 E100/350

COPYRIGHT © 1980— FORD MOTOR COMPANY —DEARBORN, MICHIGAN

1973/79 TRUCK SERIES 100/500

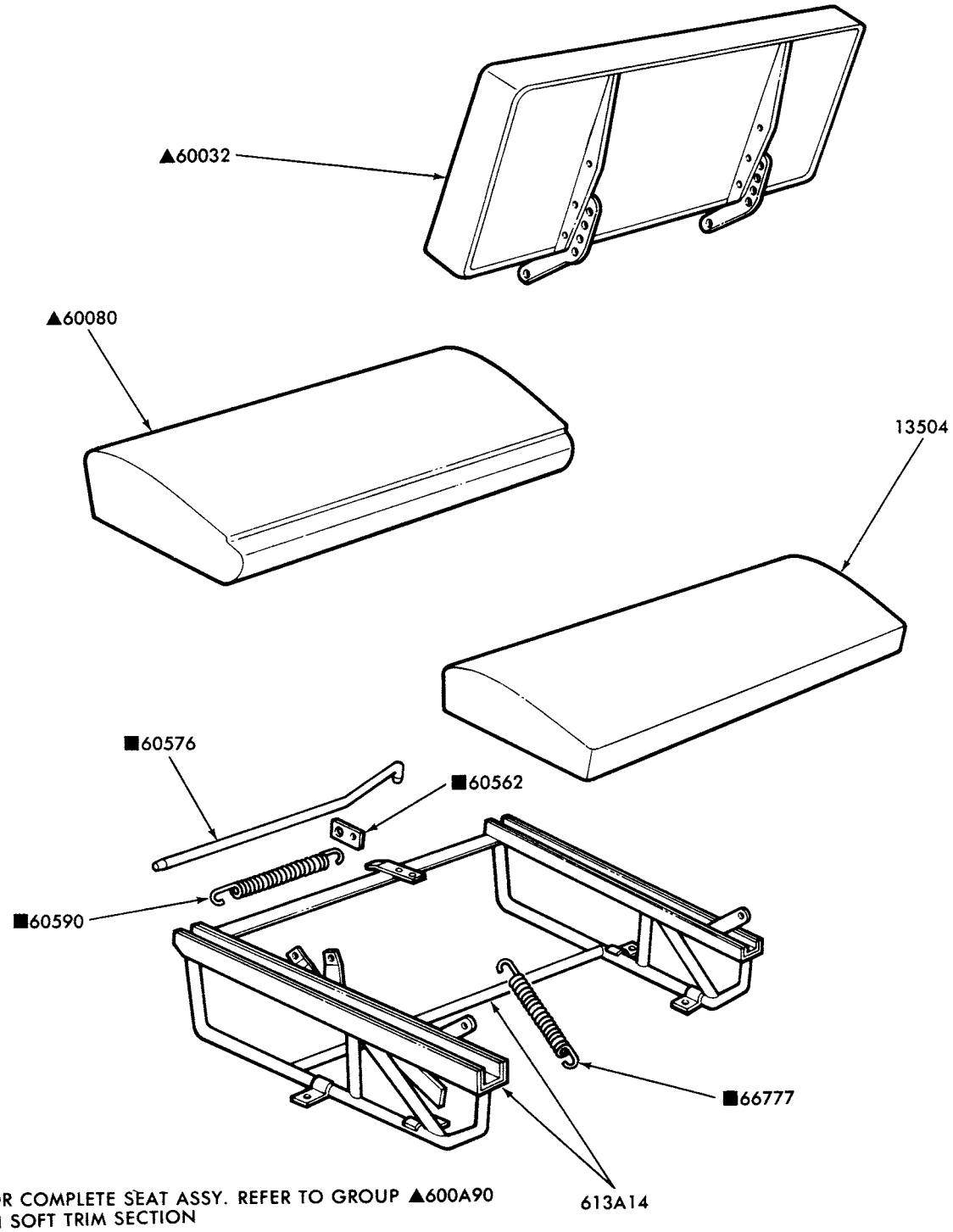

FOR COMPLETE SEAT ASSY. REFER TO GROUP ▲600A90 IN SOFT TRIM SECTION

▲REFER TO GROUP IN SOFT TRIM SECTION

■ALSO SERVICED IN ASSY. GROUP ▲600A90

P-15064

REAR SEAT PARTS (BED SEAT)
1979 E100/350

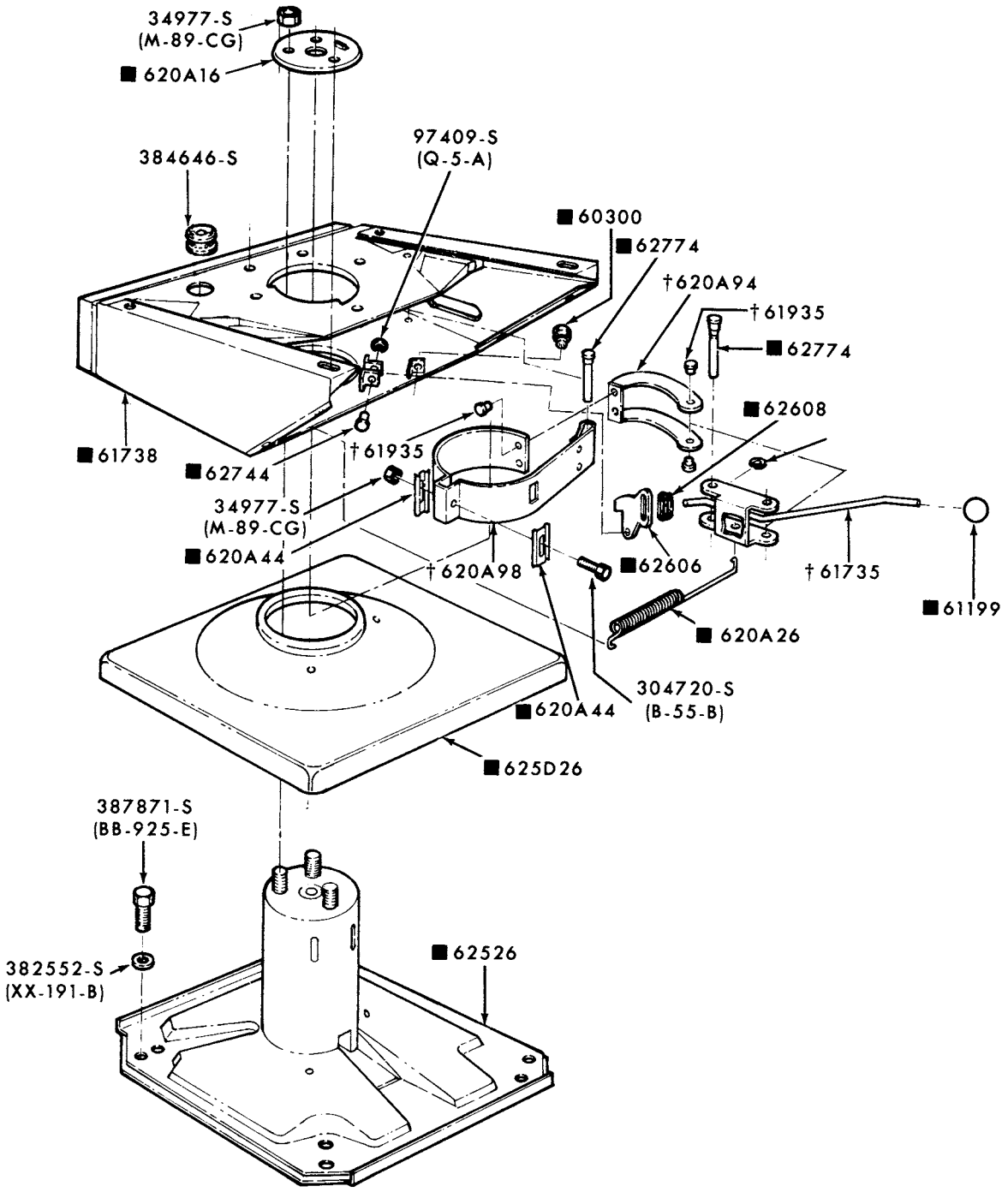

■ ALSO SERVICED IN COMPLETE ASSY 60094-S
† SERVICED ONLY IN COMPLETE ASSY 60094-S

P-14985

REAR SEAT PARTS-CAPTAINS CHAIR (2ND ROW)-LOWER HALF-BOSTROM
1979 E100/350

COPYRIGHT © 1980— FORD MOTOR COMPANY —DEARBORN, MICHIGAN

1973/79
TRUCK SERIES 100/500

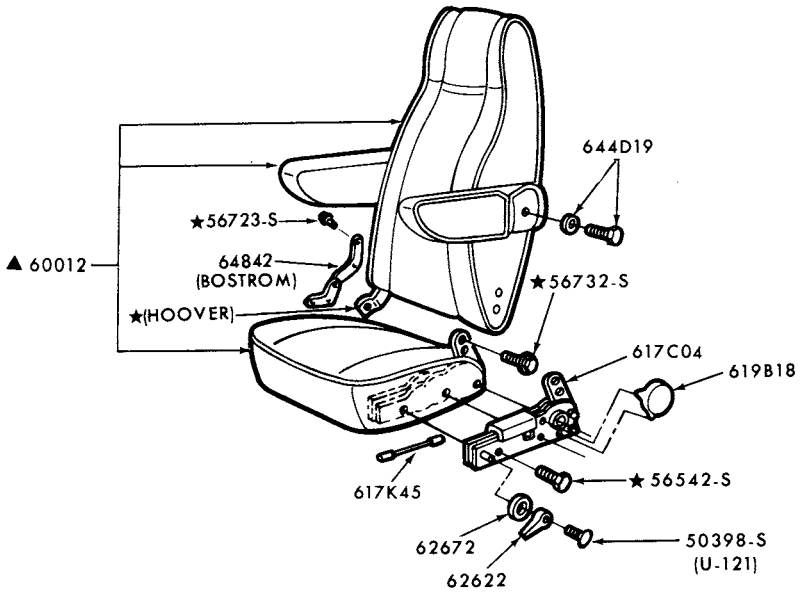

▲ REFER TO GROUP IN SOFT TRIM SECTION

P-15056

FRONT SEAT MECHANISM & RELATED PARTS (CAPTAINS CHAIR-UPPER HALF)
1979 E100/350

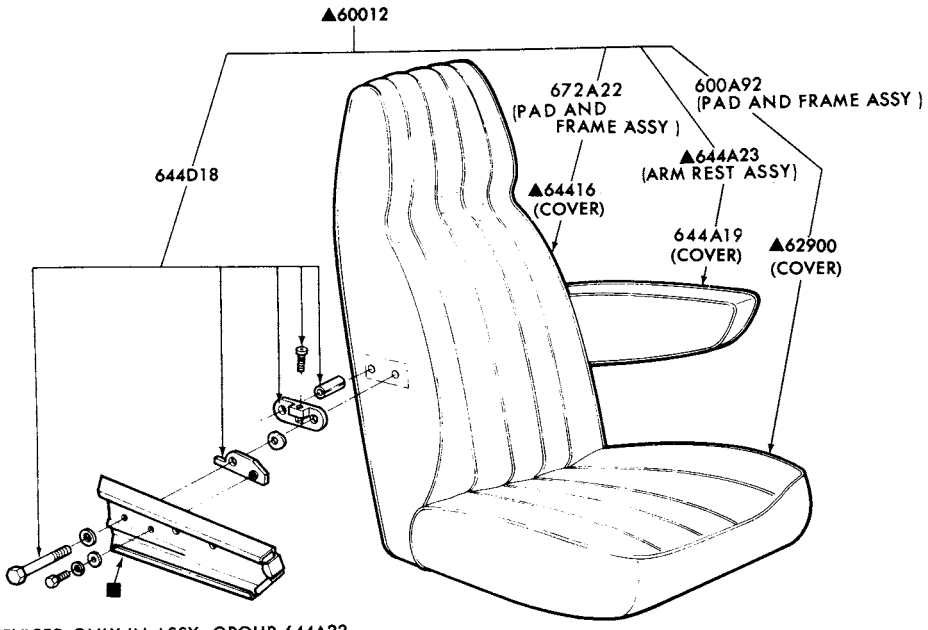

■SERVICED ONLY IN ASSY. GROUP 644A22
▲REFER TO GROUP IN SOFT TRIM SECTION

P-14408

FRONT SEAT PARTS-CAPTAINS CHAIR-UPPER HALF -BOSTROM
1975/79 E100/350

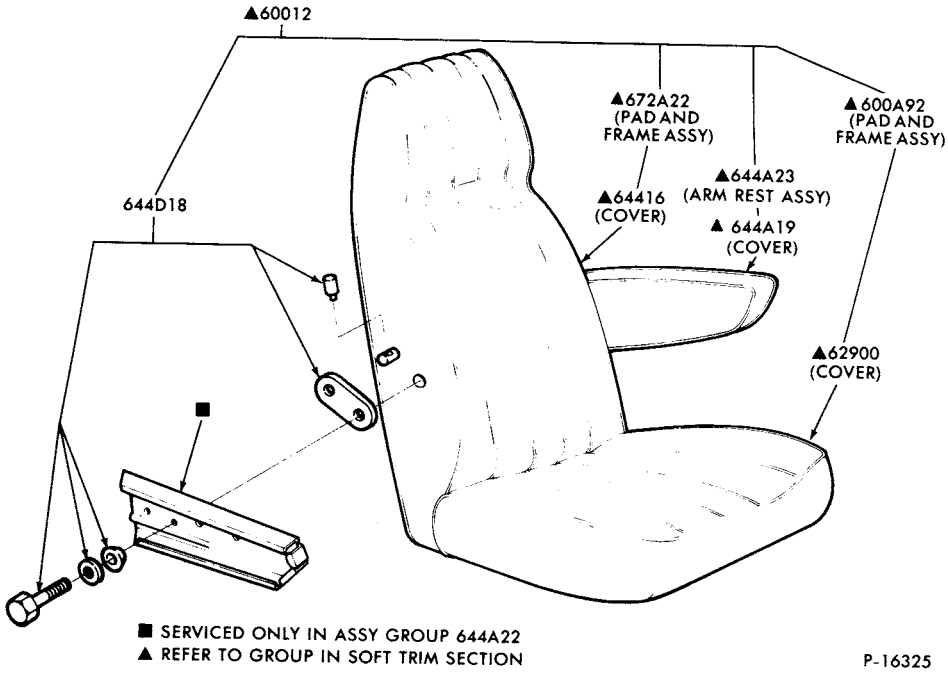

FRONT SEAT - CAPTAINS CHAIR - UPPER HALF - HOOVER
1975/79 E100/350

COPYRIGHT © 1980 FORD MOTOR COMPANY - DEARBORN, MICHIGAN

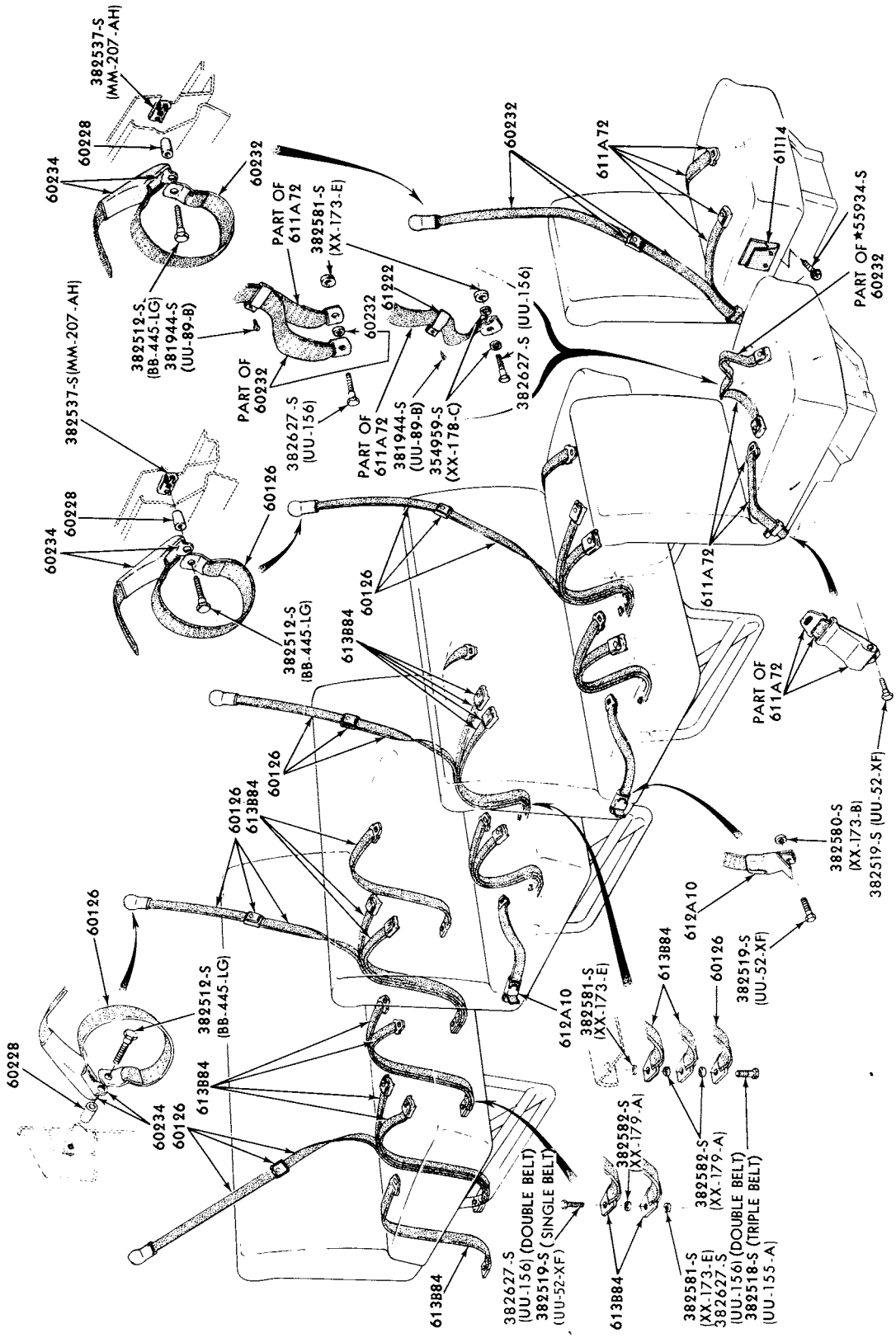

SEAT BELT and SHOULDER HARNESS PARTS
E100/350

COPYRIGHT © 1979 FORD MOTOR COMPANY, DEARBORN, MICHIGAN

1973/79 TRUCK SERIES 100/500

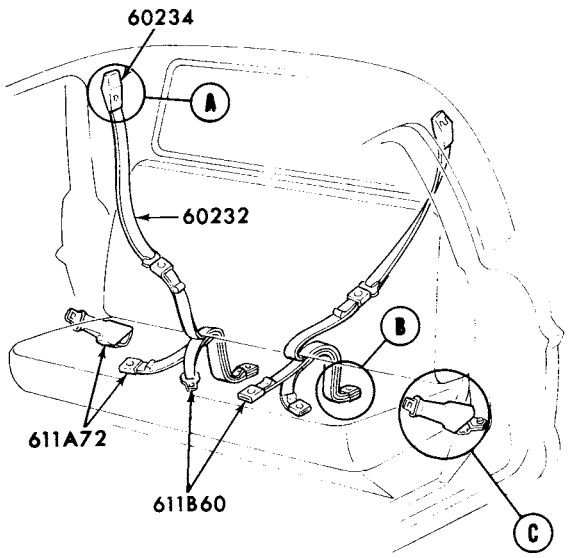

BENCH SEAT

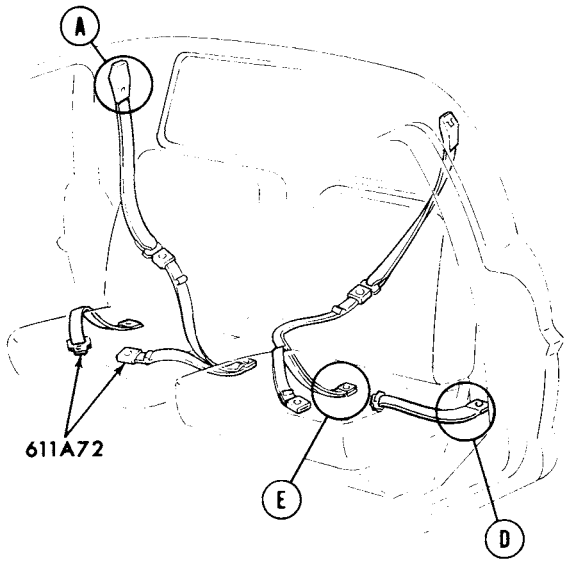

BUCKET SEAT

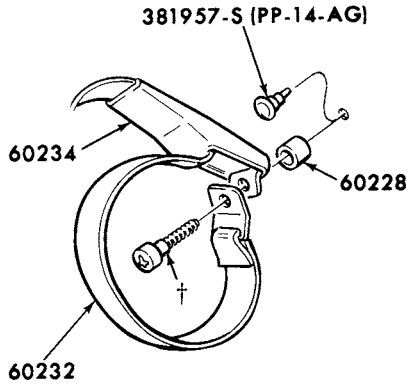

VIEW A

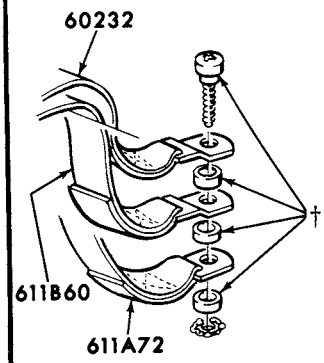

W/CENTER BELT

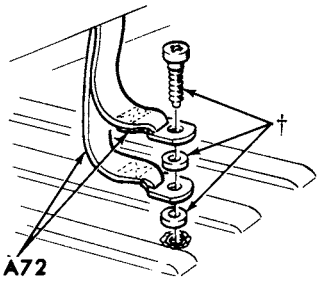

W/O CENTER BELT

VIEW B

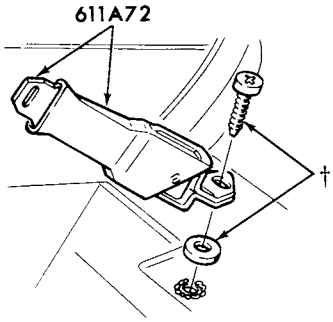

VIEW C

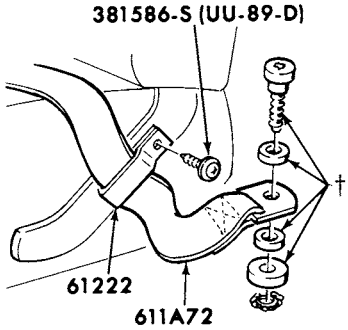

VIEW D

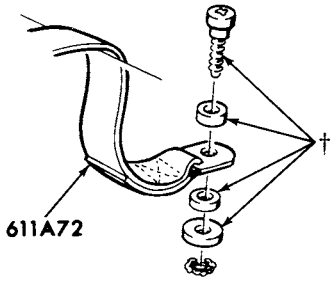

VIEW E

† REFER TO BELT GROUP IN TEXT FOR ATTACHING PARTS

P-9251

SEAT BELT and SHOULDER HARNESS PARTS
1973/75 F100/500

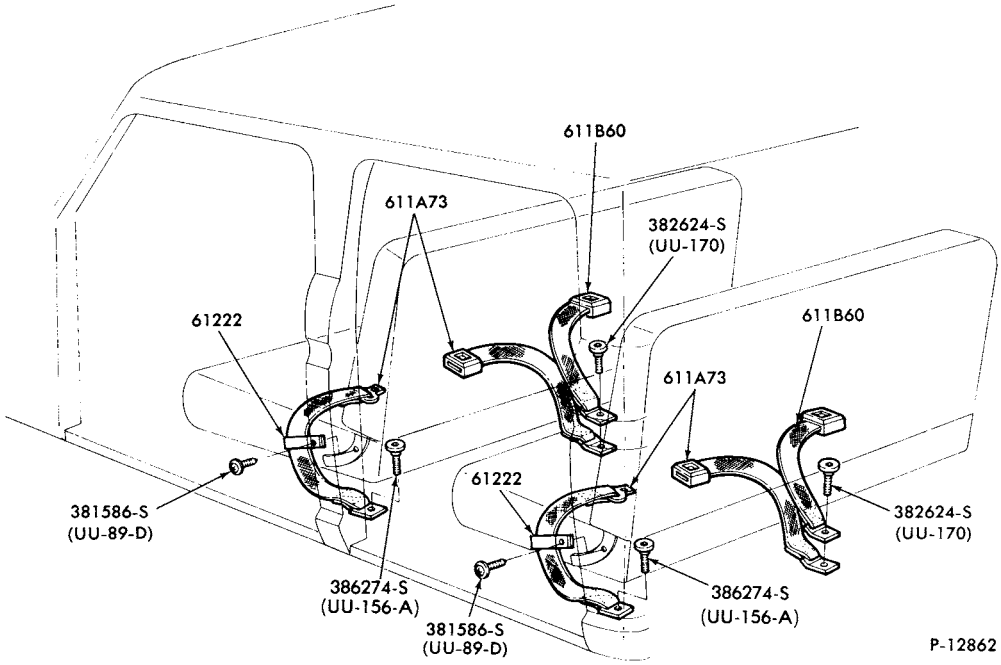

SEAT BELTS and ATTACHING PARTS
1973/74 F250/500 (CREW CAB)

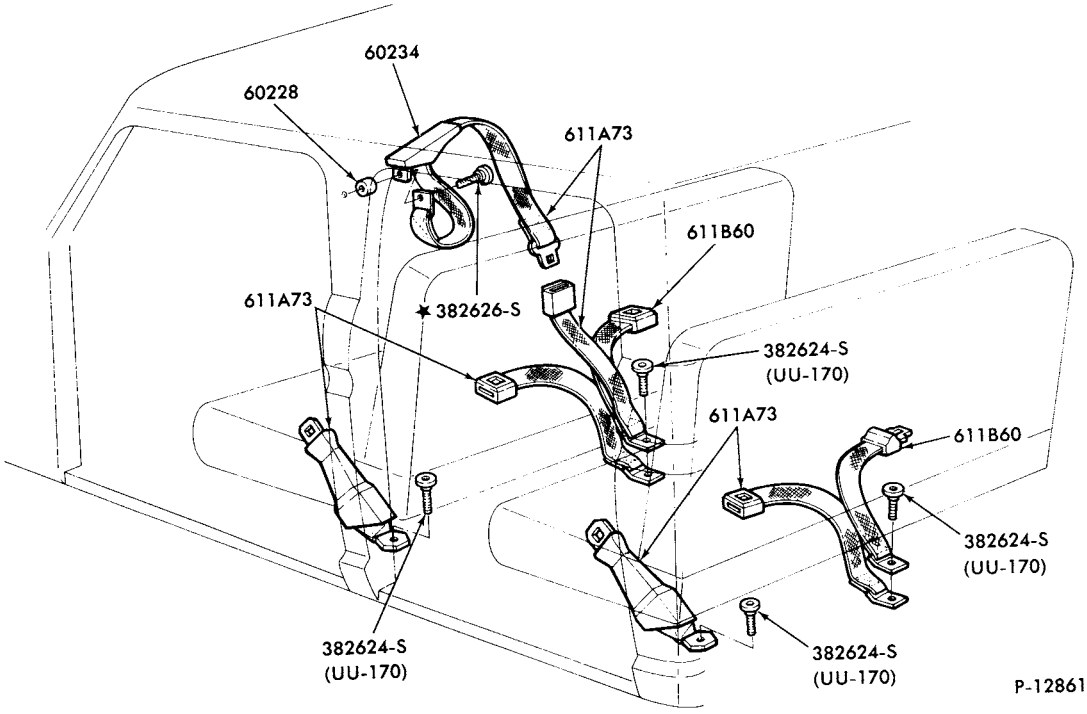

SEAT BELTS and ATTACHING PARTS--w/SHOULDER HARNESS
1974/75 F250/500 (CREW CAB)

COPYRIGHT © 1979 FORD MOTOR COMPANY, DEARBORN, MICHIGAN

1973/79
TRUCK SERIES 100/500

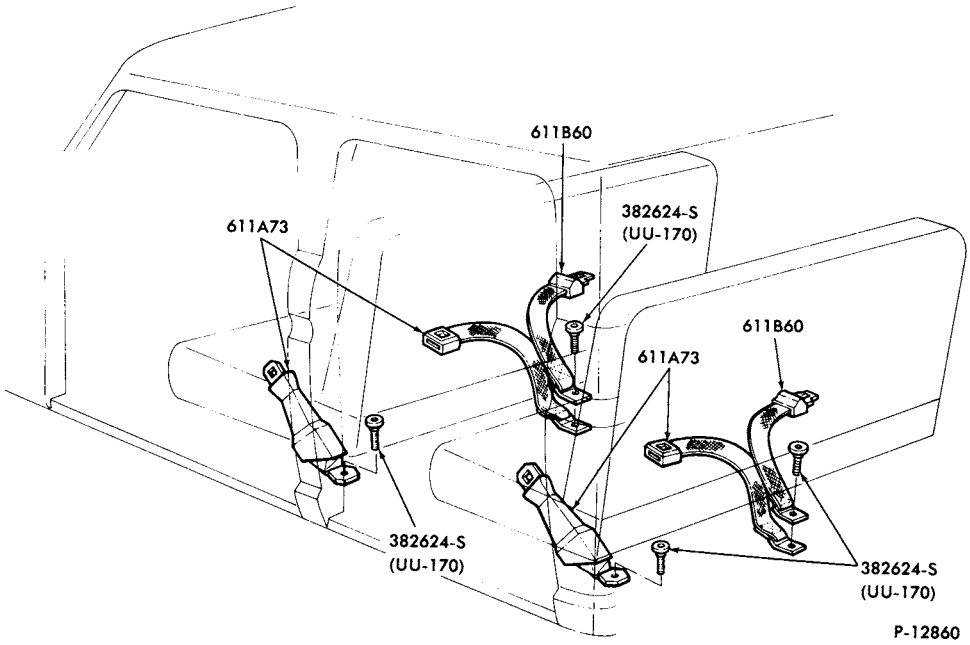

SEAT BELTS and ATTACHING PARTS--w/o SHOULDER HARNESS
1974/75 F250/500 (CREW CAB)

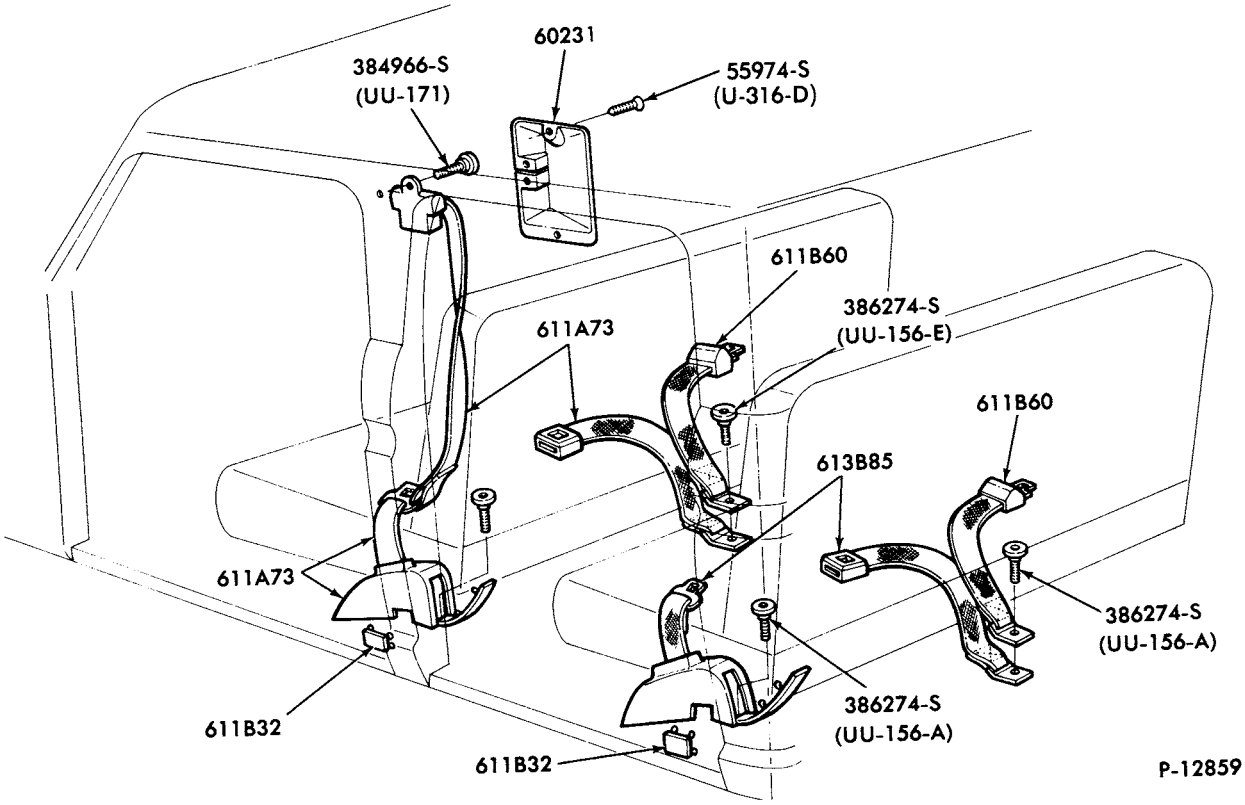

SEAT BELT and SHOULDER HARNESS PARTS
1976/77 F250/500 (CREW CAB) and 1978/ F250/350 (CREW CAB)

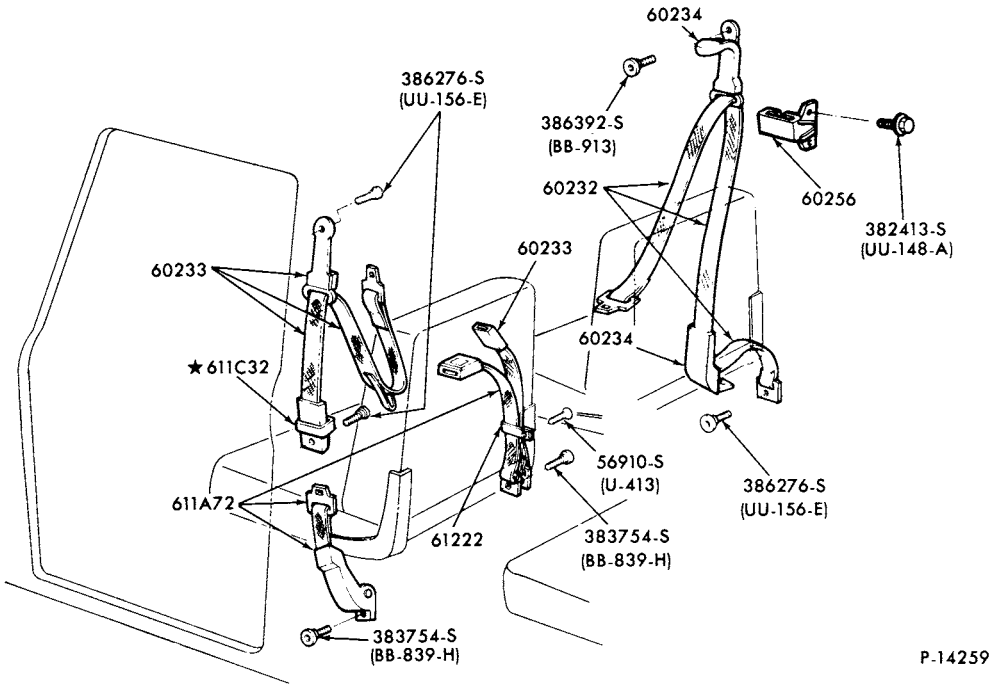

SEAT BELT and SHOULDER HARNESS PARTS (DRIVER and PASSENGER)
1975 E100/350

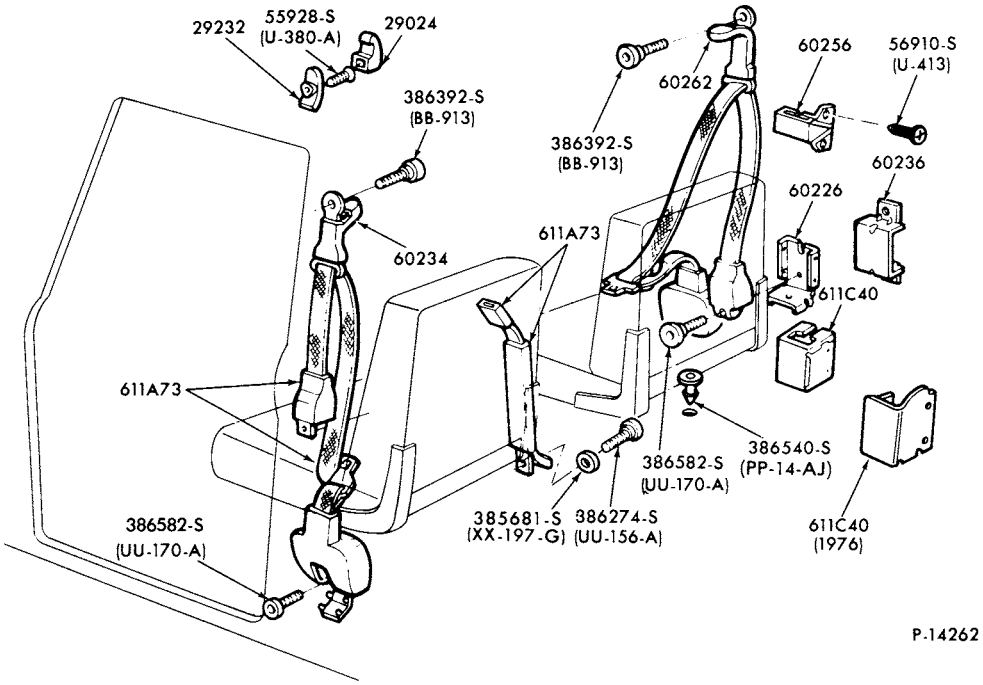

SEAT BELT and SHOULDER HARNESS PARTS (DRIVER and PASSENGER)
1976/ E100/350

COPYRIGHT © 1979 FORD MOTOR COMPANY, DEARBORN, MICHIGAN

1973/79
TRUCK SERIES 100/500

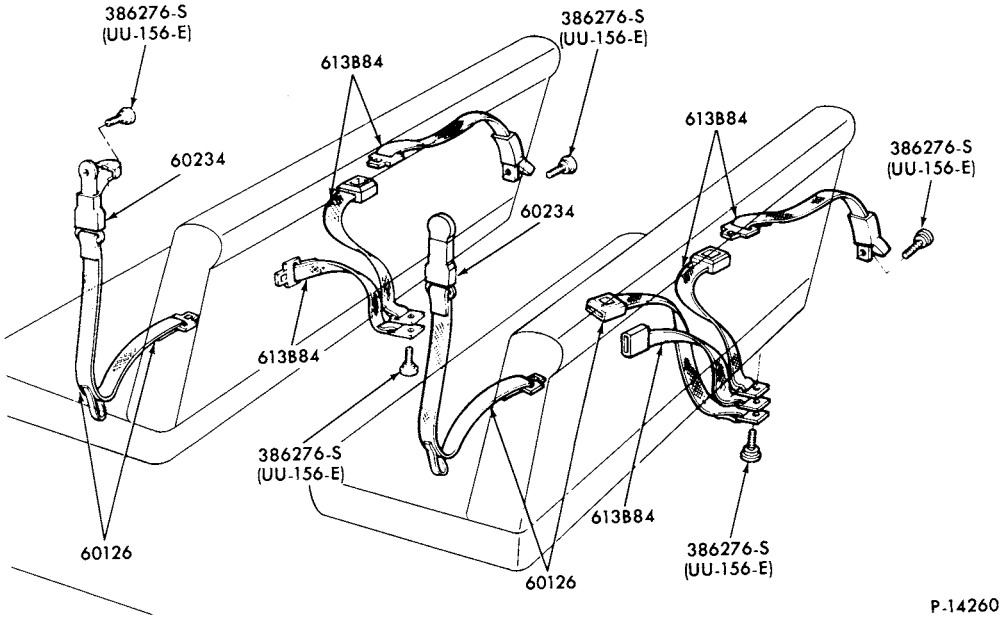

SEAT BELTS and RELATED PARTS (2ND and 3RD SEAT)
1975 E100/350

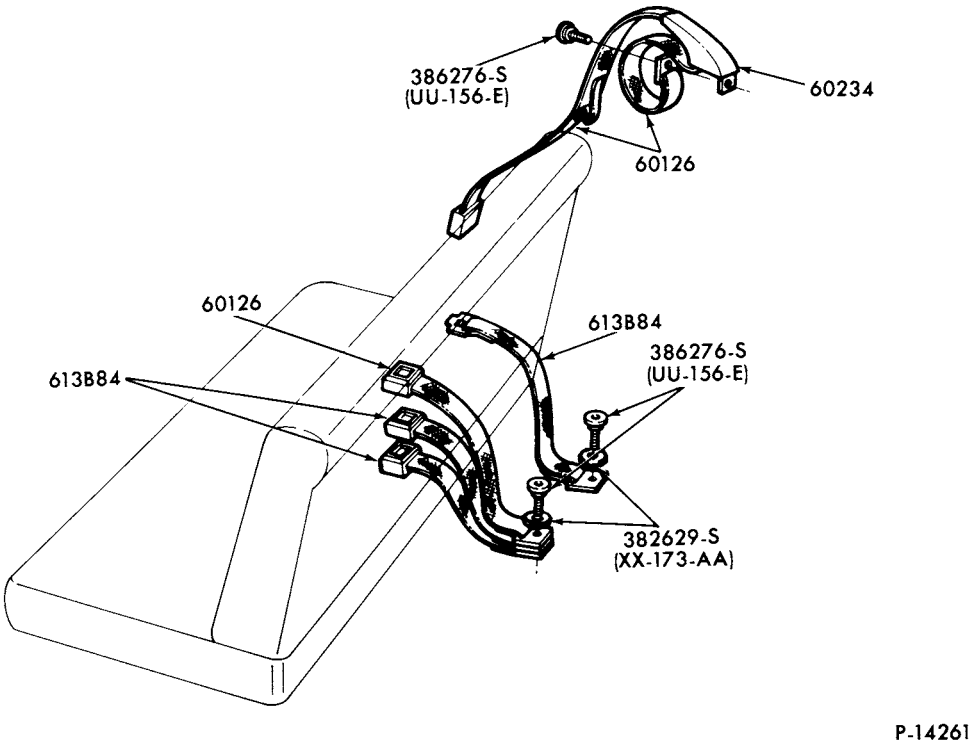

SEAT BELTS and RELATED PARTS (4TH SEAT)
1975 E100/350

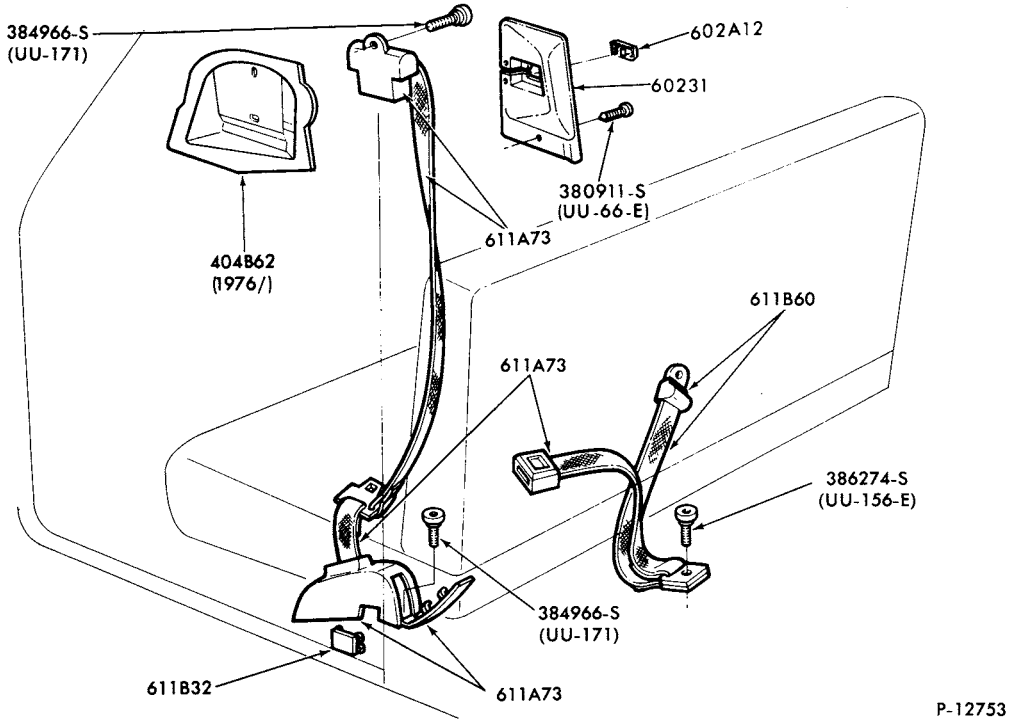

SEAT BELT and SHOULDER HARNESS PARTS
1976/77 F100/500

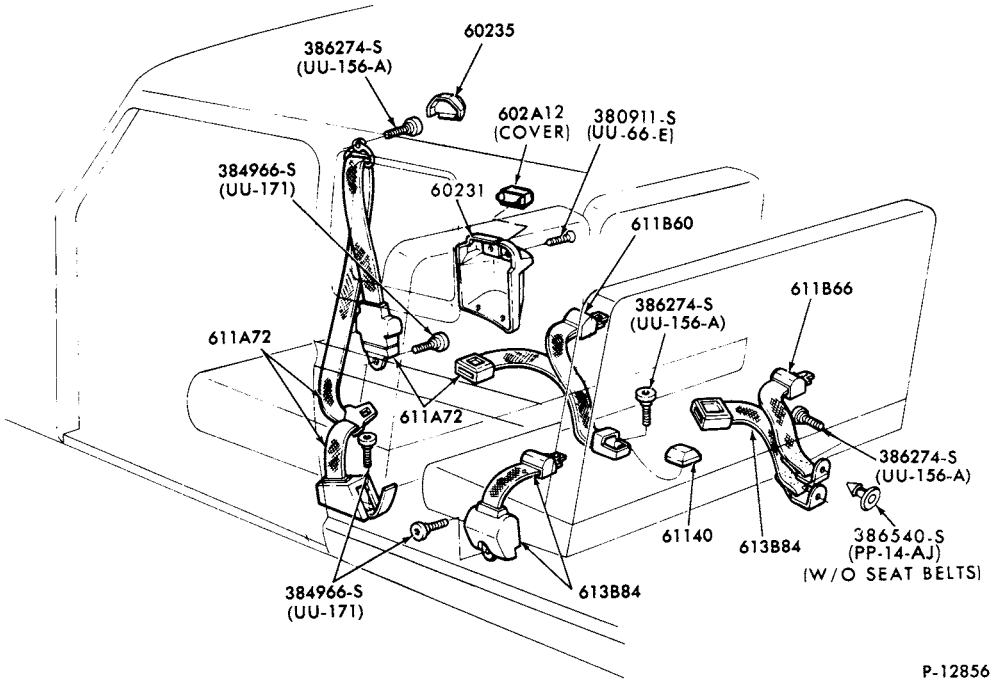

SEAT BELT and SHOULDER HARNESS PARTS--w/FORWARD FACING REAR SEAT
1976/79 F100/350 (SUPER CAB)

COPYRIGHT © 1979 FORD MOTOR COMPANY DEARBORN, MICHIGAN

1973/79
TRUCK SERIES 100/500

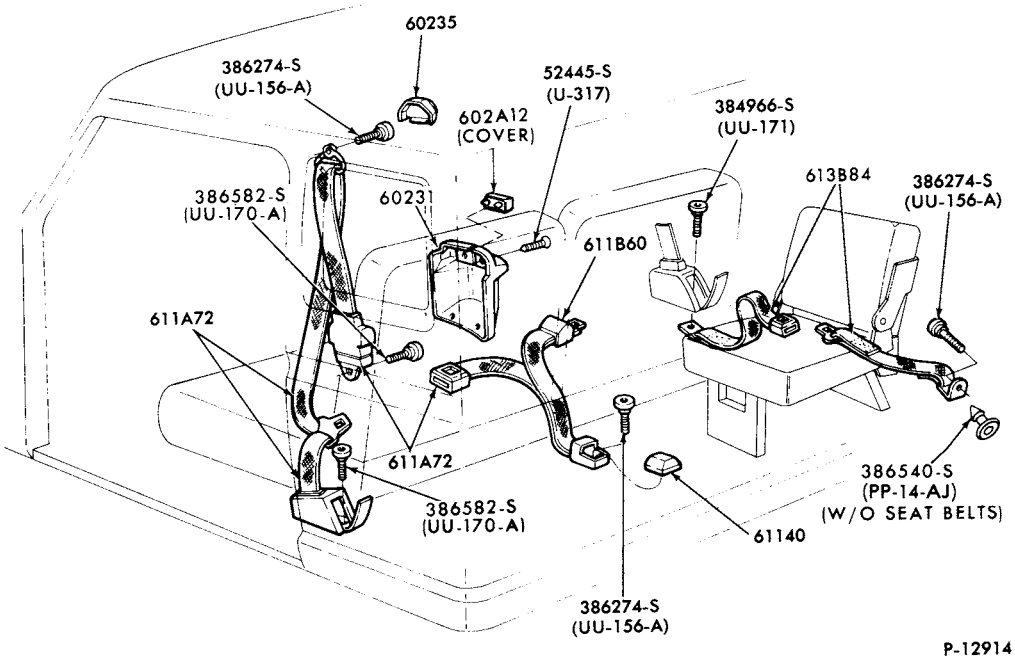

SEAT BELT and SHOULDER HARNESS PARTS--w/REAR CENTER FACING SEAT
1976/79 F100/350 (SUPER CAB)

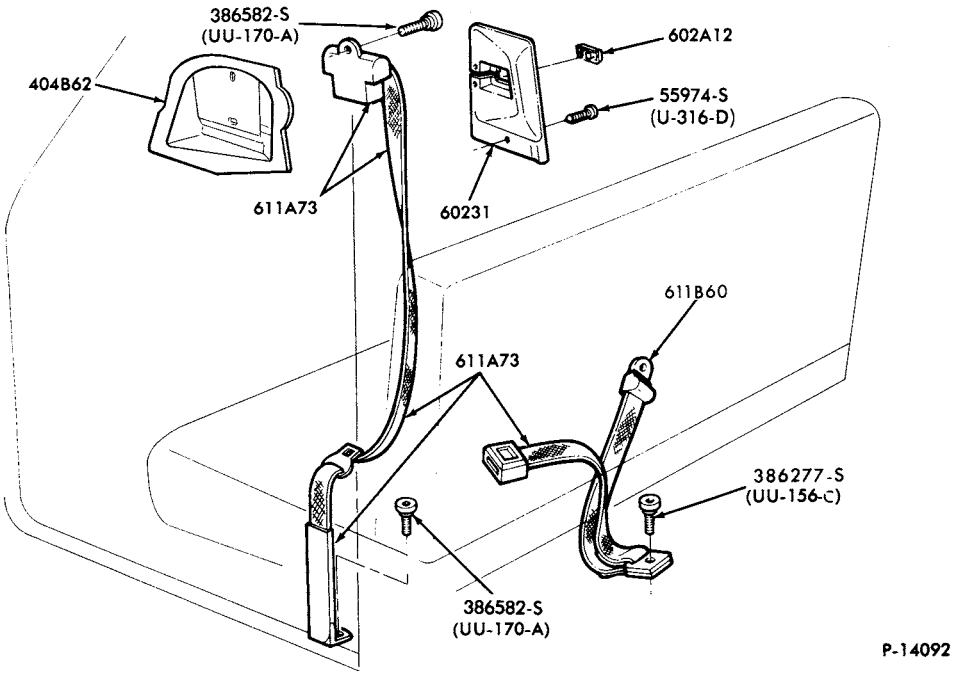

SEAT BELT and SHOULDER HARNESS PARTS
1977/79 F100/350

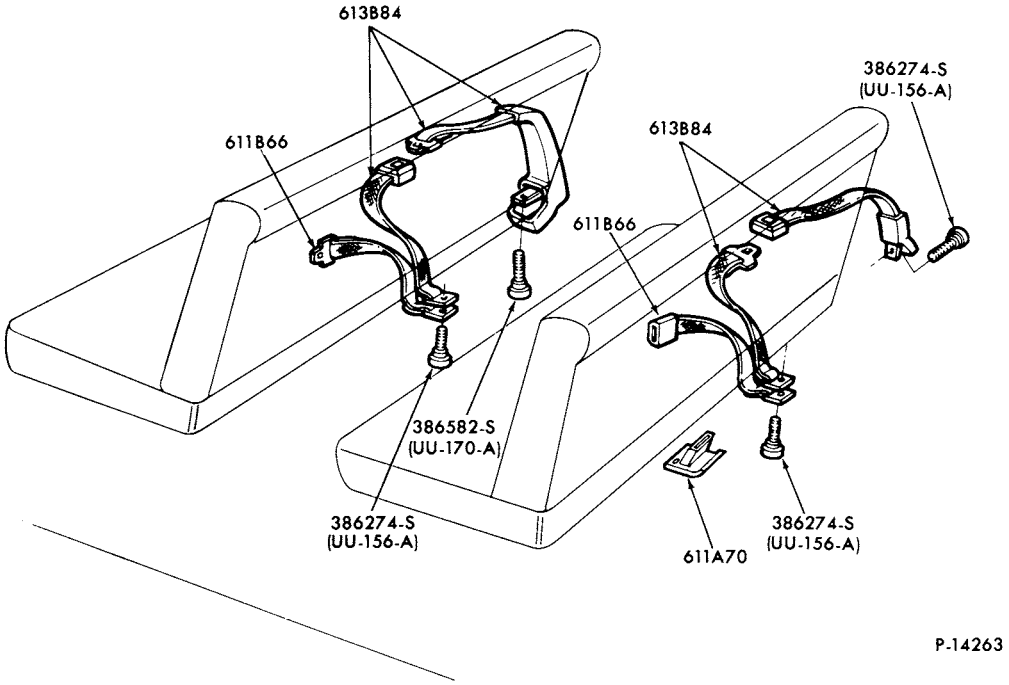

SEAT BELTS and RELATED PARTS (2ND and 3RD SEAT)
1976/79 E100/350

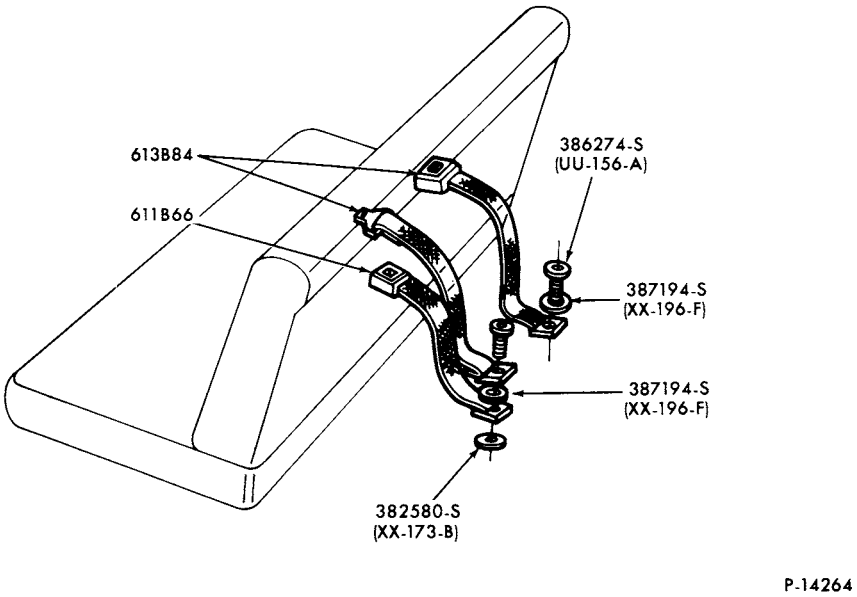

SEAT BELTS and RELATED PARTS (4TH and 5TH SEAT)
1976/79 E100/350

COPYRIGHT © 1979 FORD MOTOR COMPANY—DEARBORN, MICHIGAN

1973/79
TRUCK SERIES 100/500

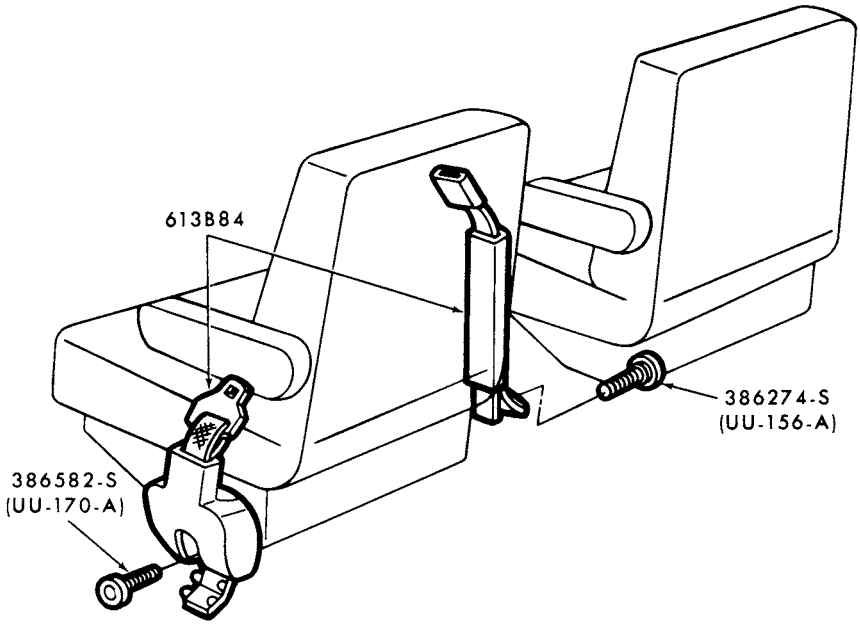

P-15162

SEAT BELTS and RELATED PARTS (2ND ROW CAPTAINS CHAIR)
1979 E100/350

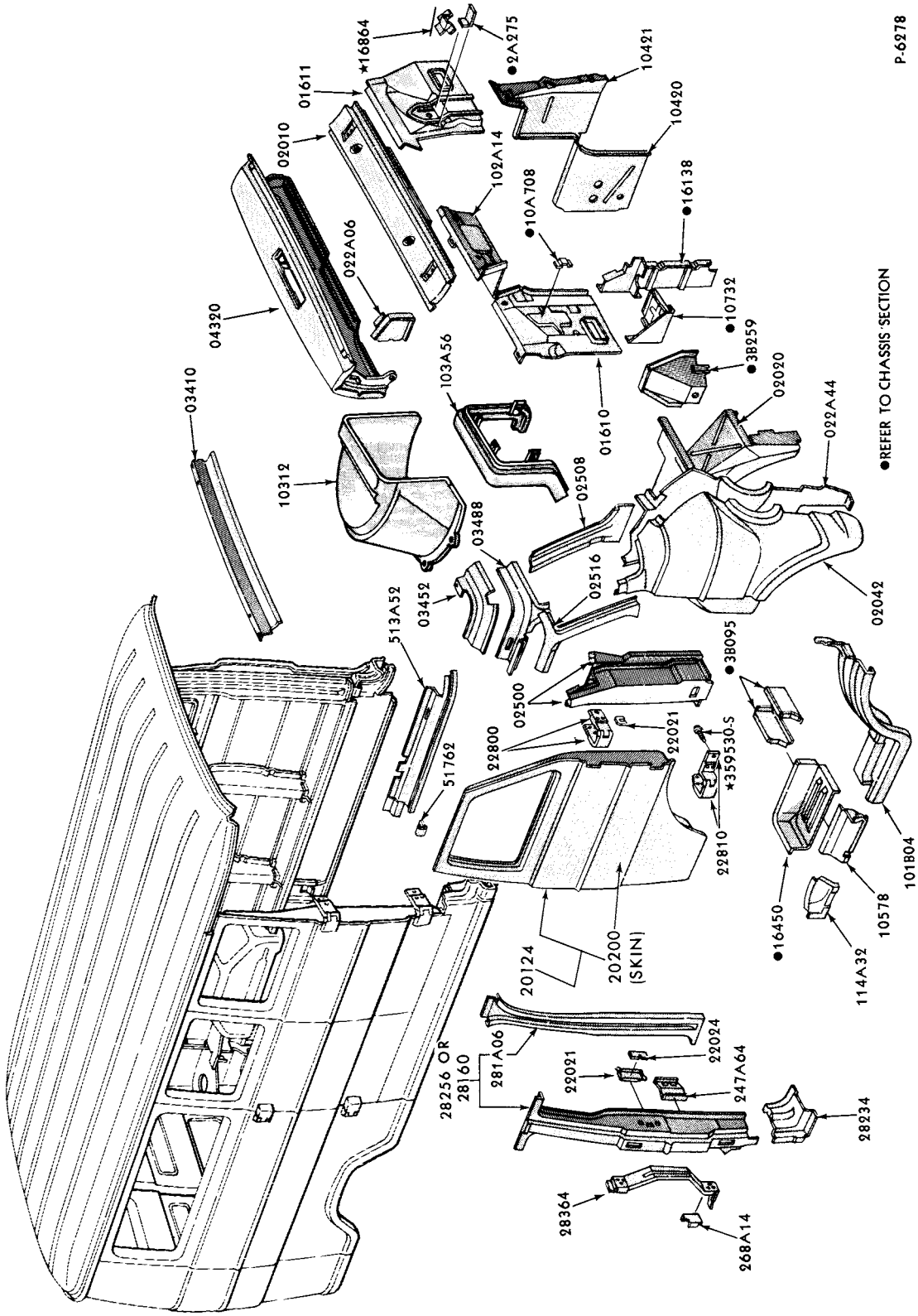

FRONT UPPER BODY SHEET METAL PARTS
1973/74 E100/300

COPYRIGHT © 1979 — FORD MOTOR COMPANY, DEARBORN, MICHIGAN

1973/79 TRUCK SERIES 100/500

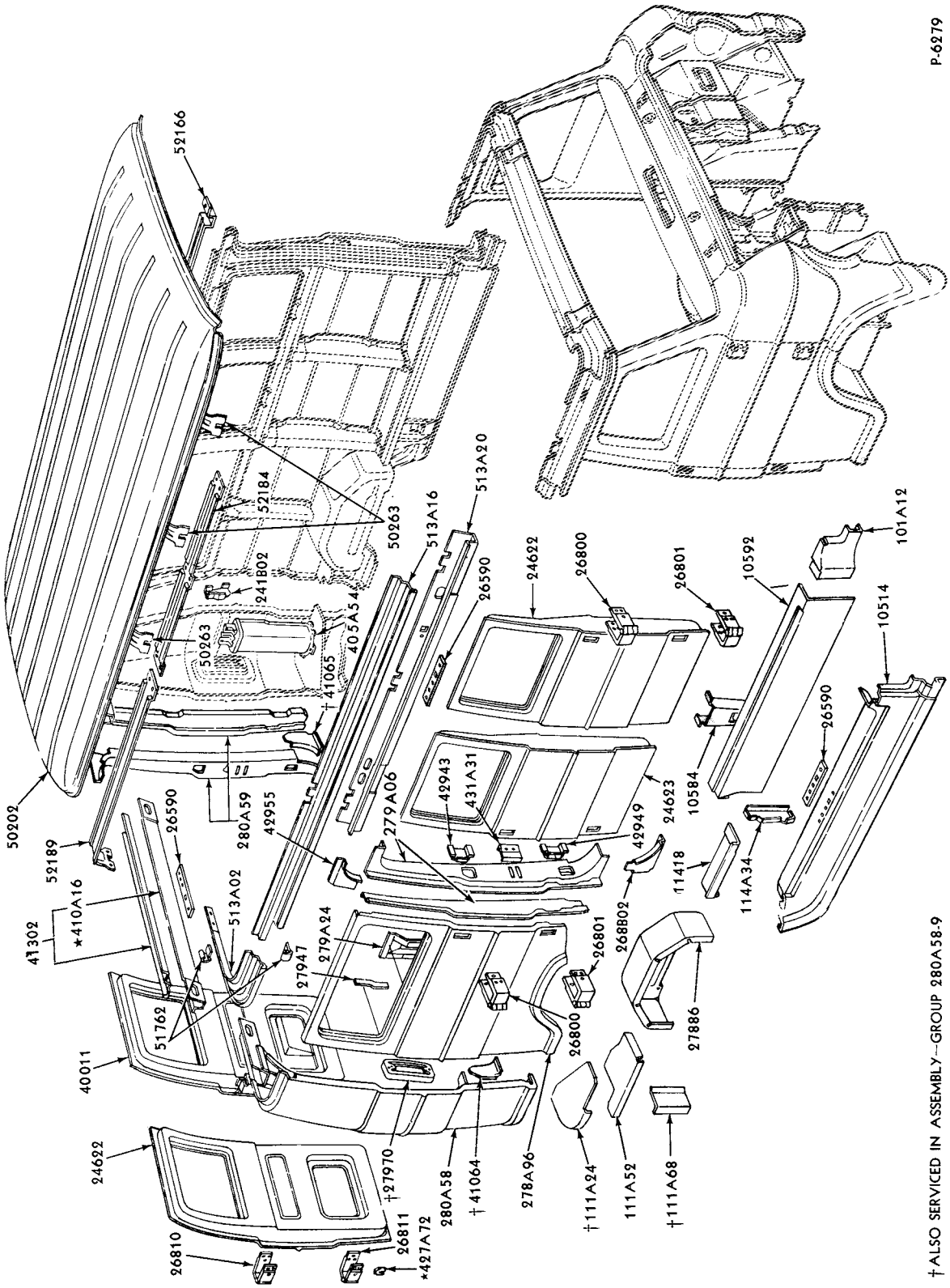

REAR UPPER BODY SHEET METAL PARTS-R.H.
1973/74 E100/300--105" W/B and HINGED DOORS

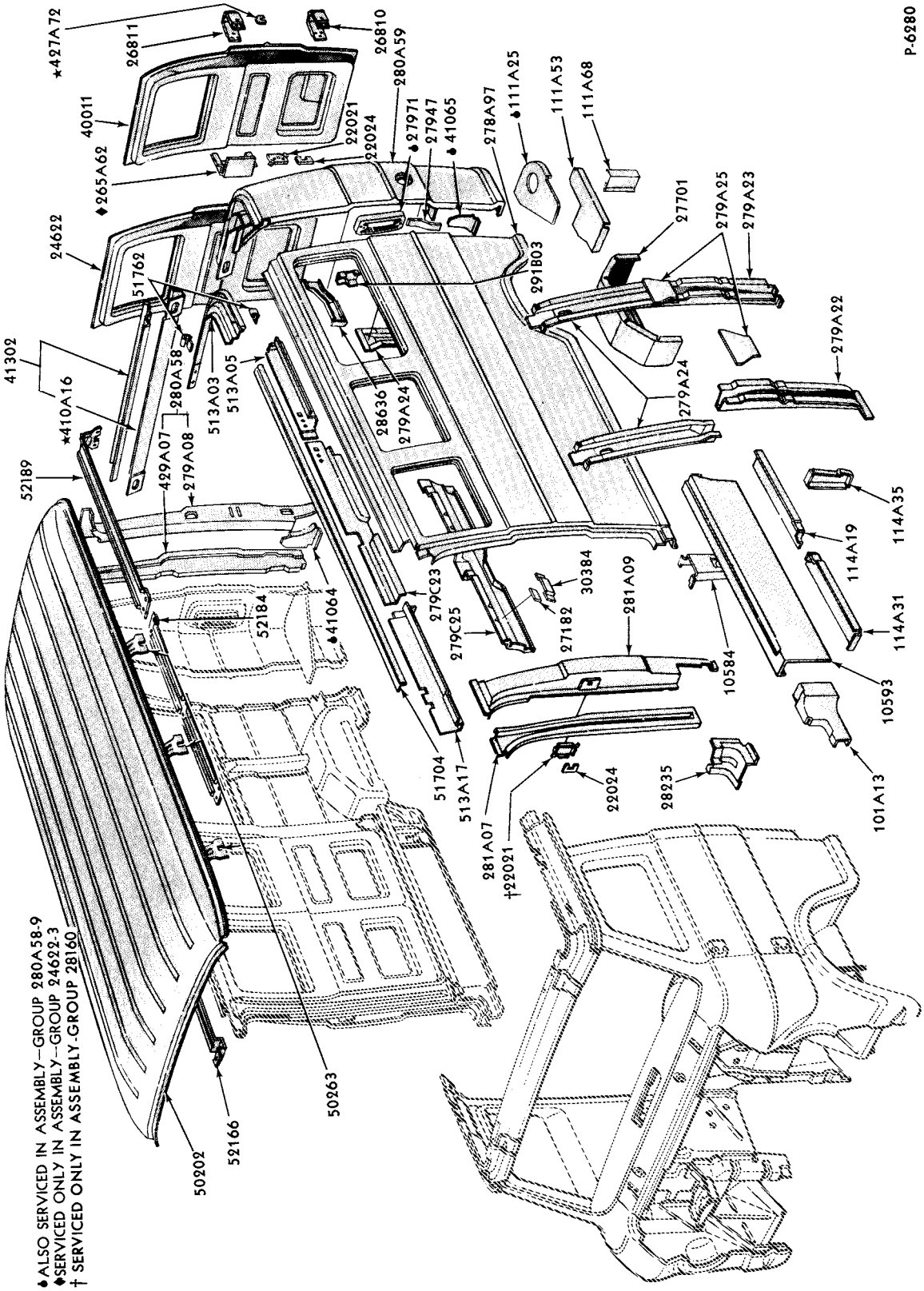

REAR UPPER BODY SHEET METAL PARTS-L.H.
1973/74 E100/300--105" W/B

COPYRIGHT © 1979 FORD MOTOR COMPANY DEARBORN, MICHIGAN

1973/79 TRUCK SERIES 100/500

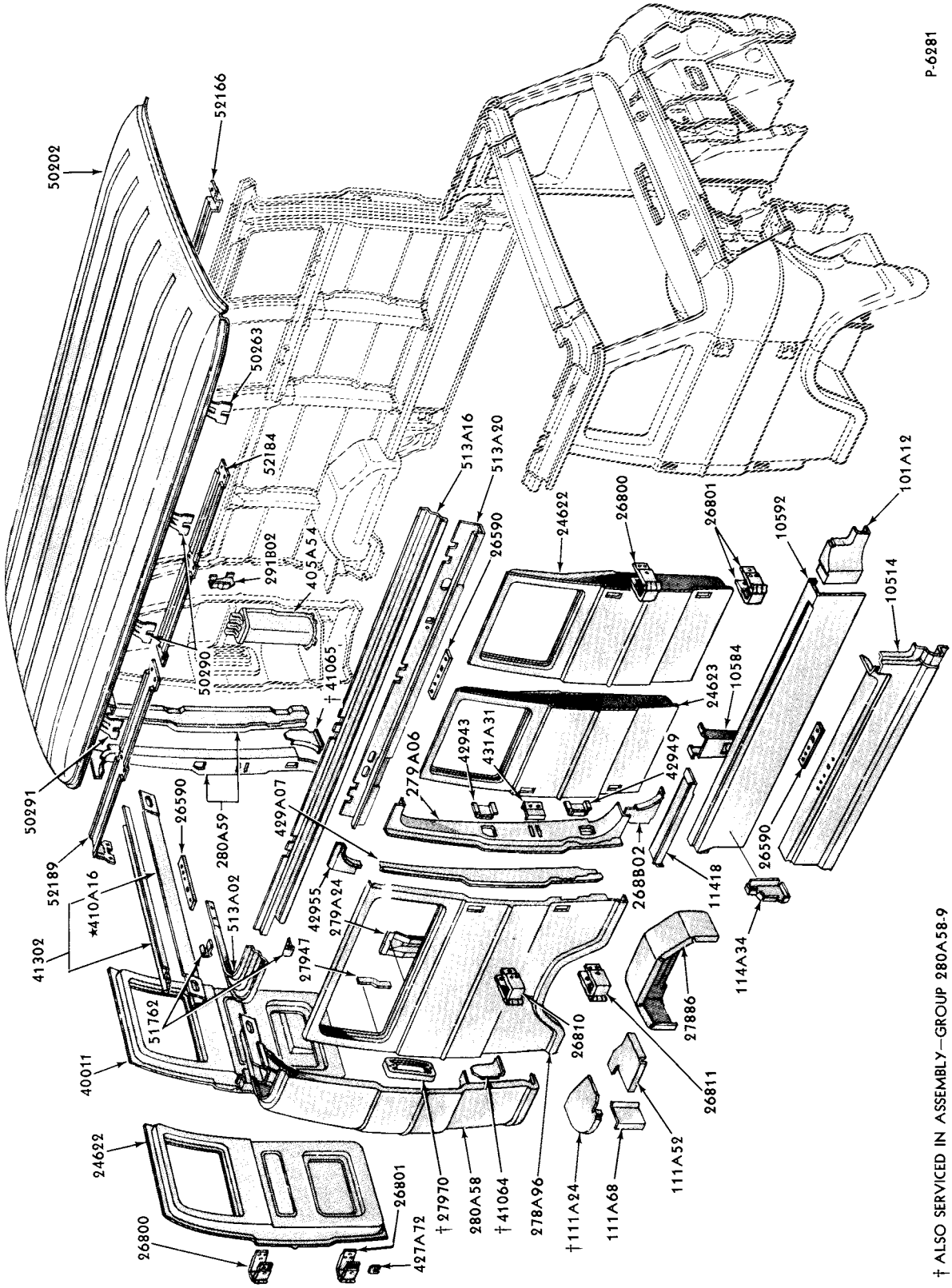

REAR UPPER BODY SHEET METAL PARTS-R.H.
1973/74 E100/300--123" W/B and HINGED DOORS

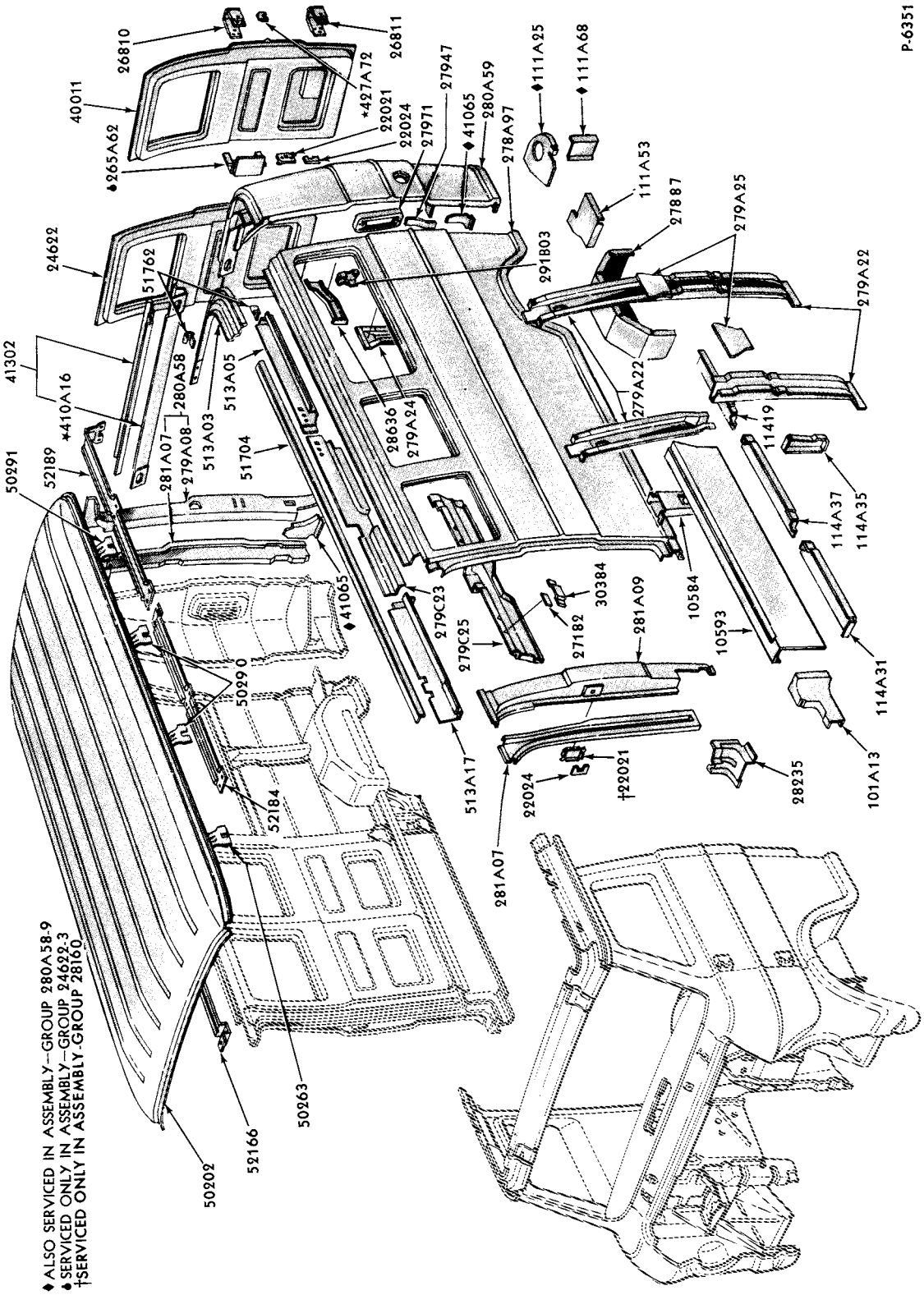

REAR UPPER BODY SHEET METAL PARTS-L.H.
1973/74 E100/300--123" W/B

COPYRIGHT © 1979 — FORD MOTOR—DEARBORN, MICHIGAN COMPANY

1973/79 TRUCK SERIES 100/500

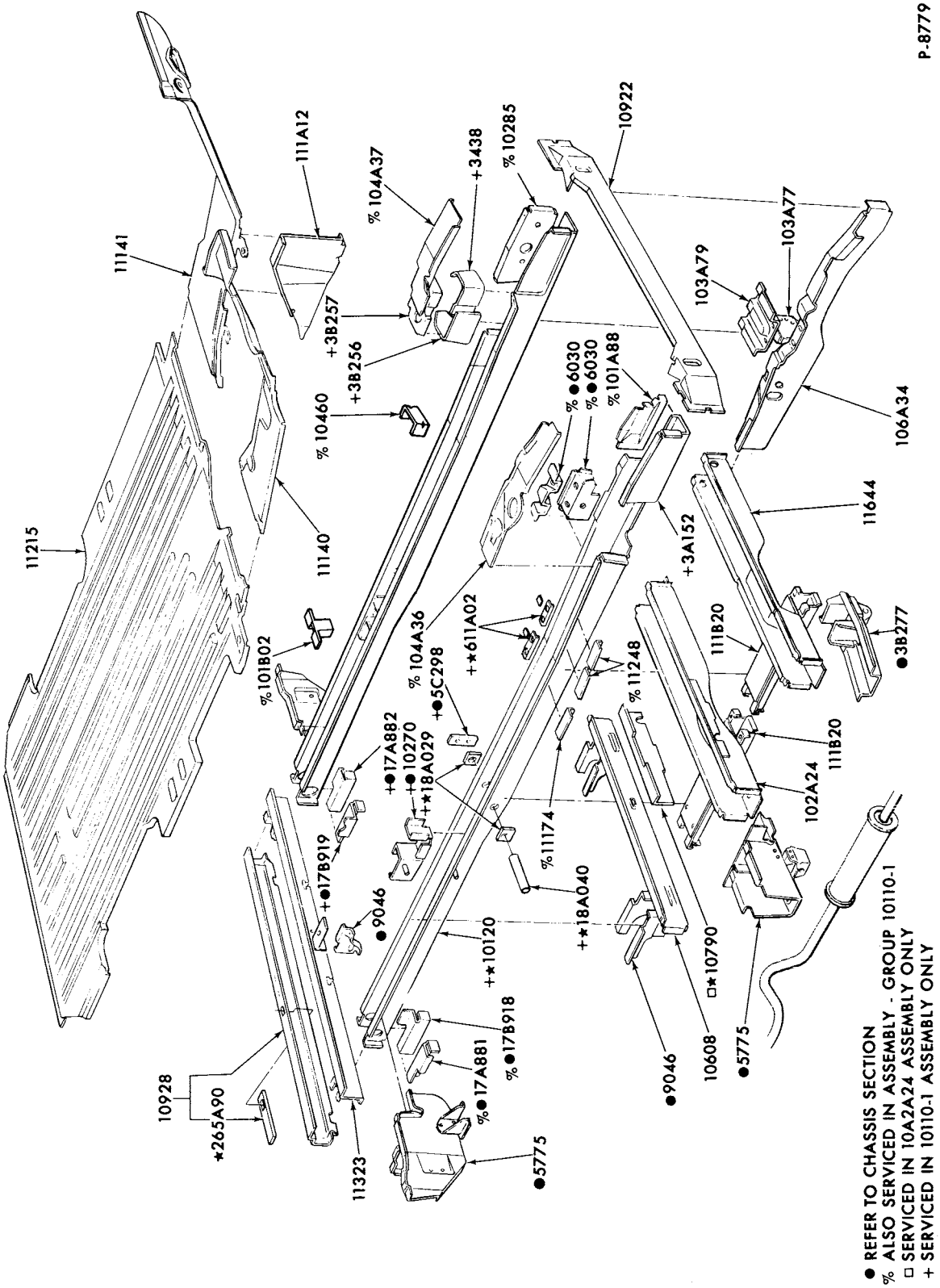

LOWER BODY SHEET METAL PARTS

1973/74 E100/300--105" W/B

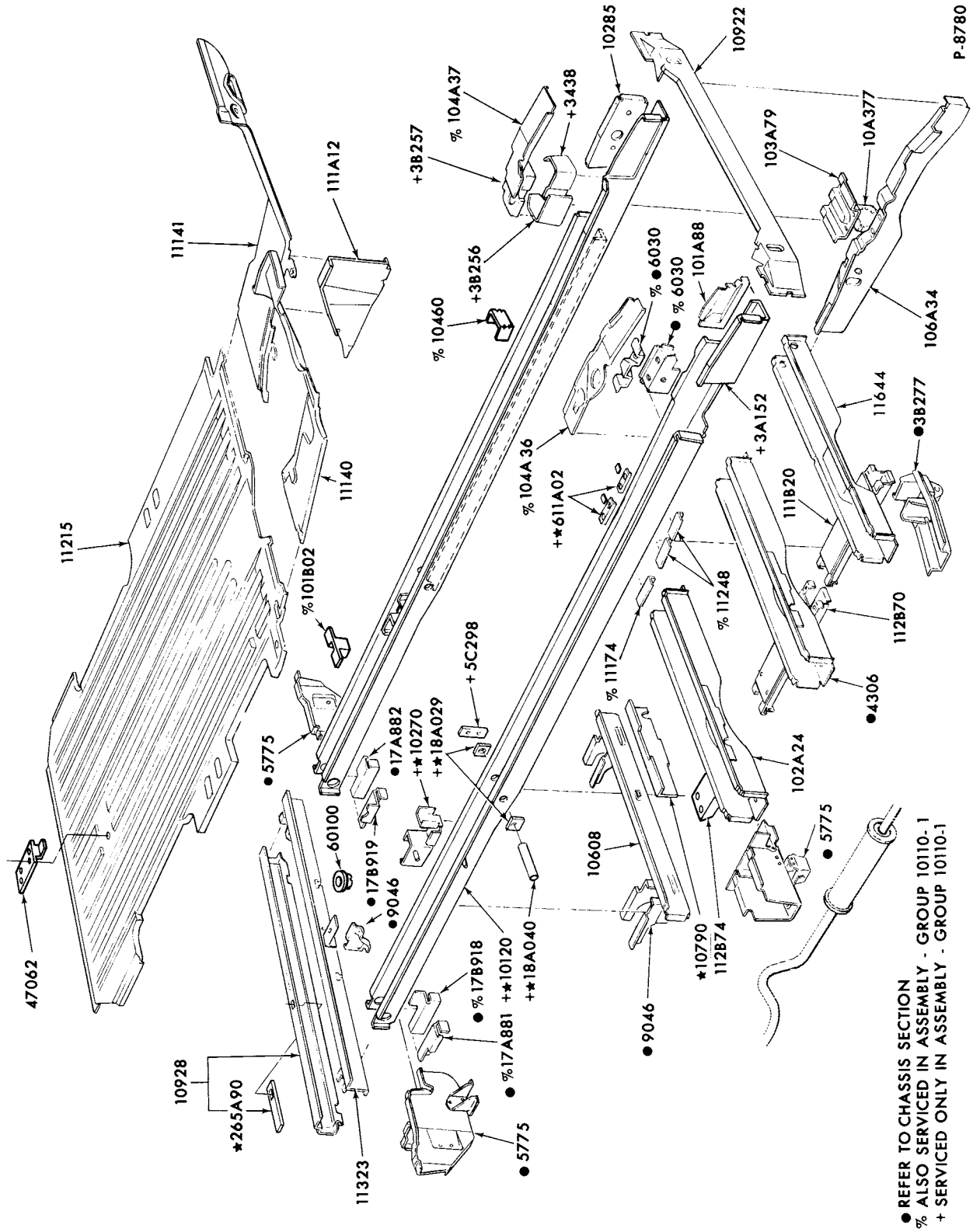

LOWER BODY SHEET METAL PARTS
1973/74 E100/300--123" W/B

COPYRIGHT © 1979 – FORD MOTOR COMPANY – DEARBORN, MICHIGAN

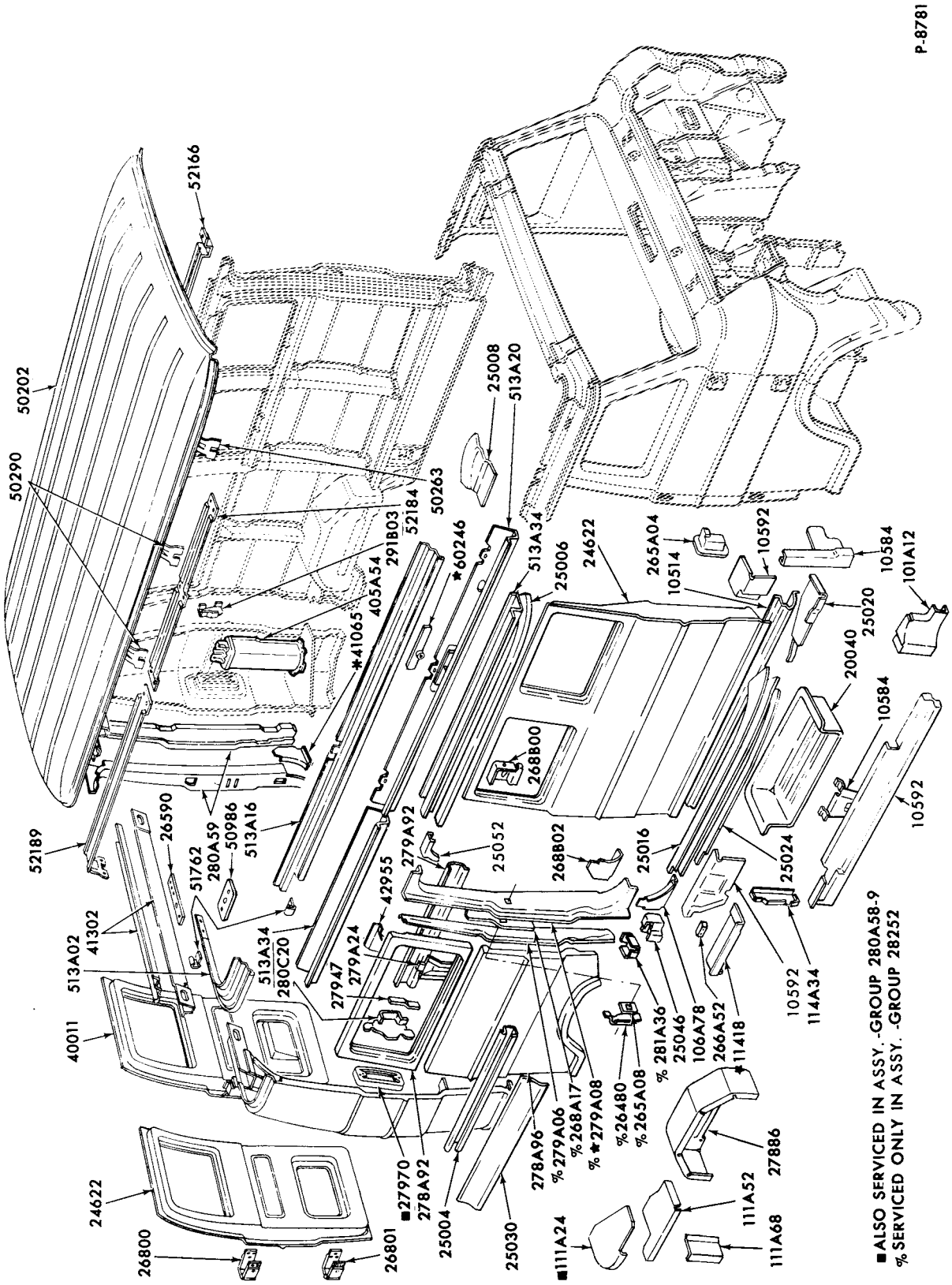

UPPER BODY SHEET METAL PARTS-R.H.
1973/74 E100/300--w/SLIDING DOOR

P-8942

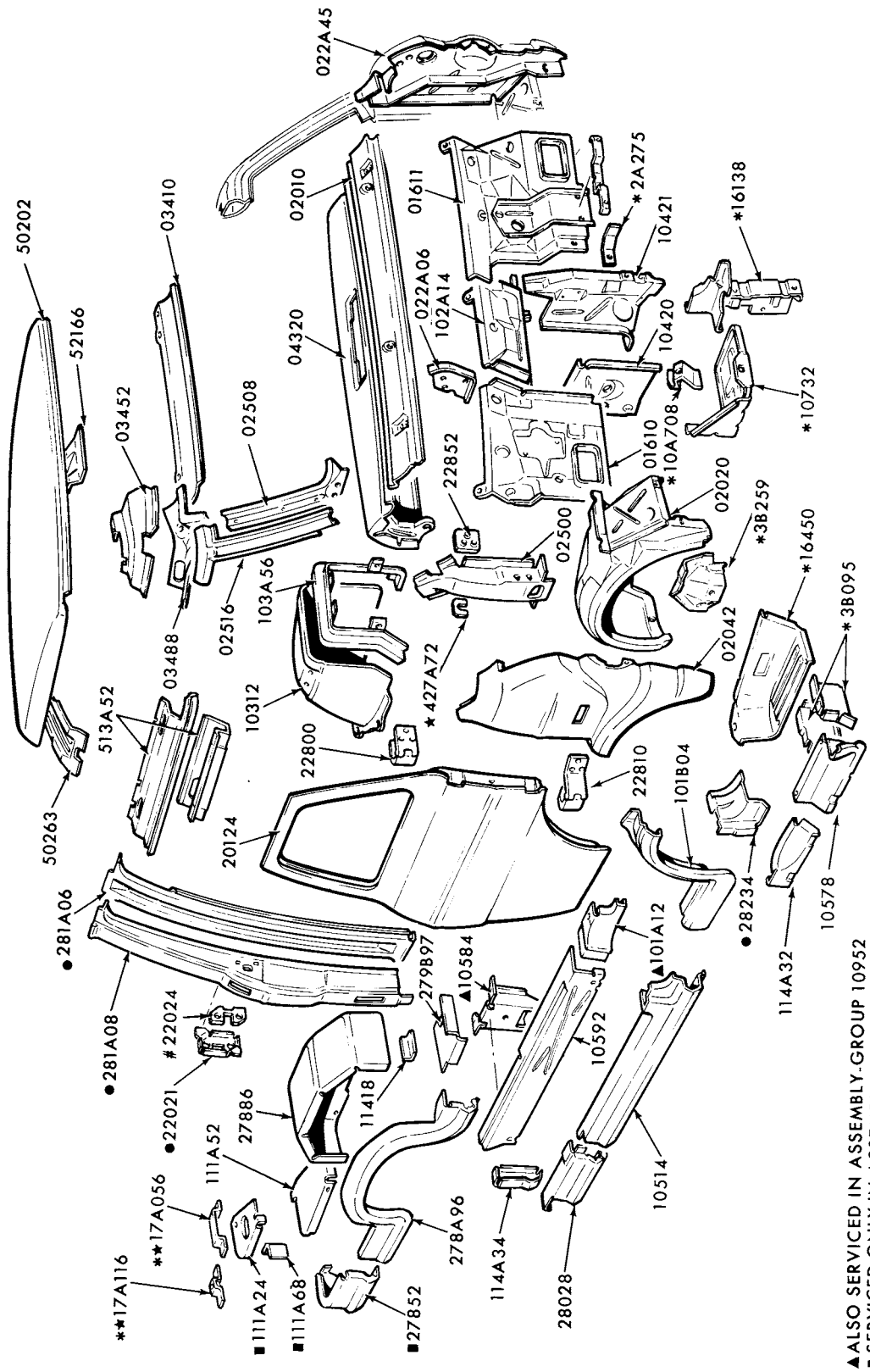

UPPER BODY SHEET METAL PARTS
1973/74 E300 (CUTAWAY CAB)

COPYRIGHT © 1979 --FORD MOTOR--DEARBORN, MICHIGAN COMPANY

1973/79 TRUCK SERIES 100/500

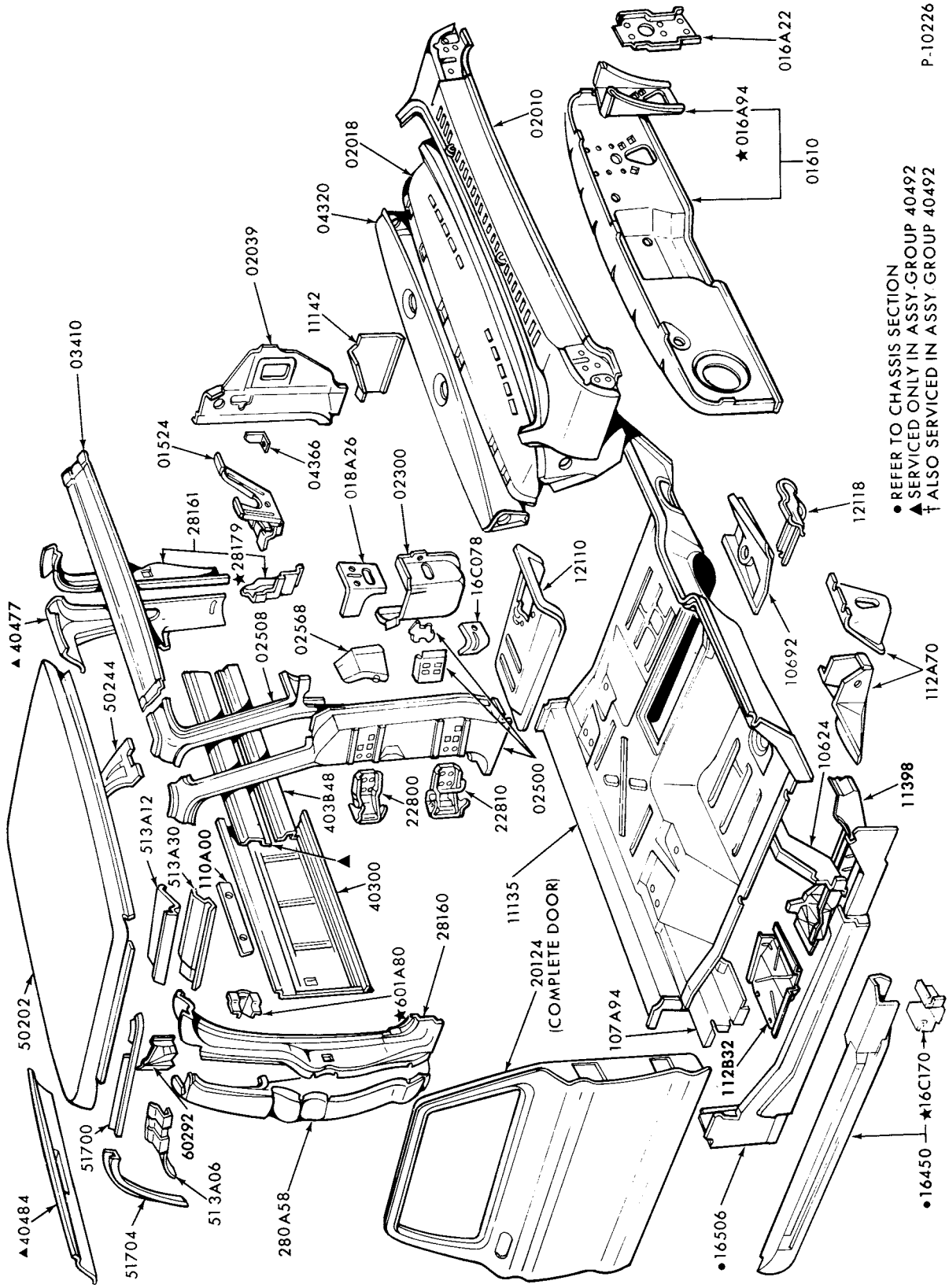

SHEET METAL PARTS
1973/77 F100/500-BODY TYPE 81 (REGULAR CAB)
1978/ F100/350-BODY TYPE 81 (REGULAR CAB)

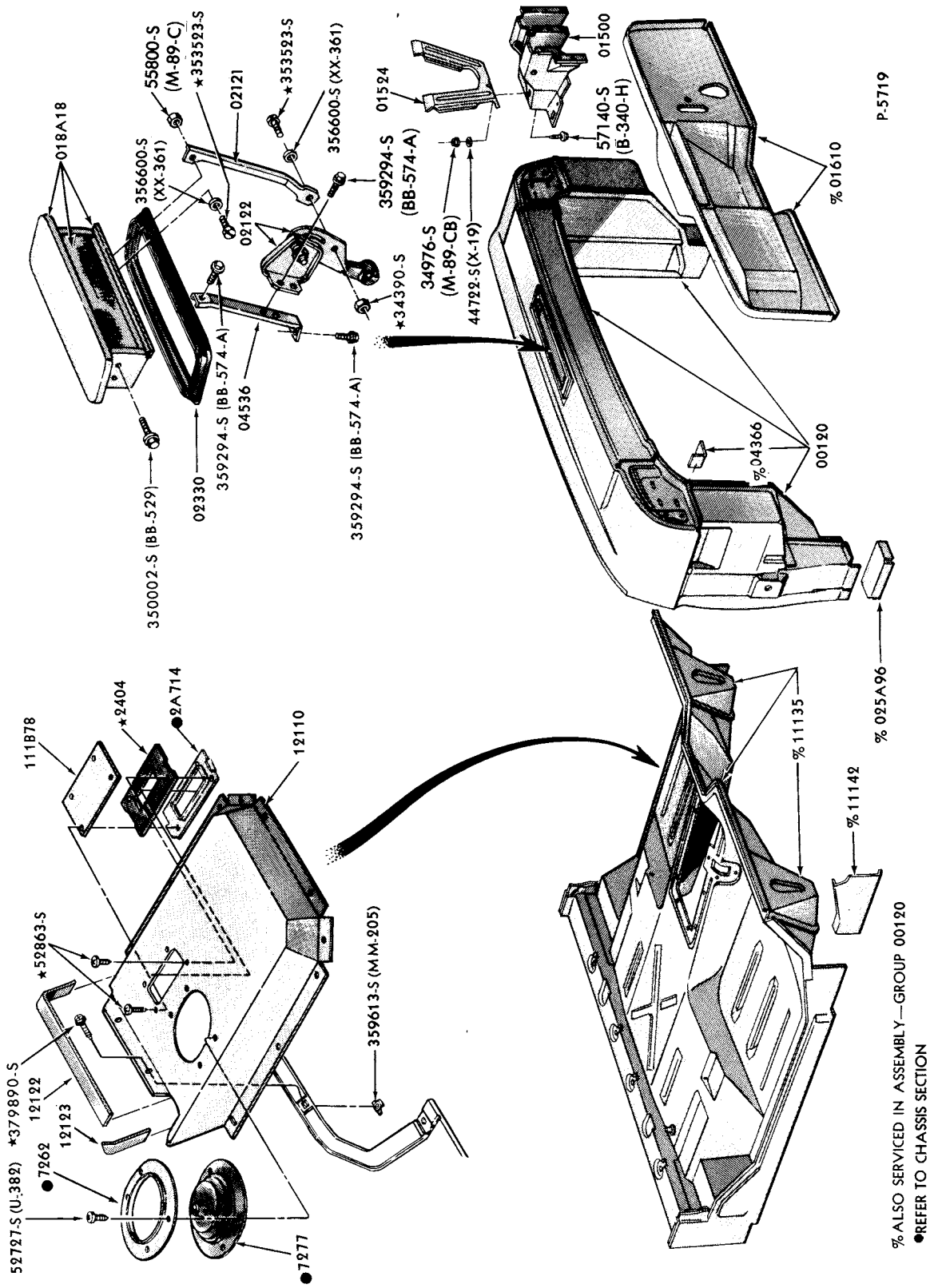

SHEET METAL PARTS

1973/77 B-F350/500-BODY TYPE 84 and 1978/ F350-BODY TYPE 84

COPYRIGHT © 1979 FORD MOTOR COMPANY — DEARBORN, MICHIGAN

1973/79 TRUCK SERIES 100/500

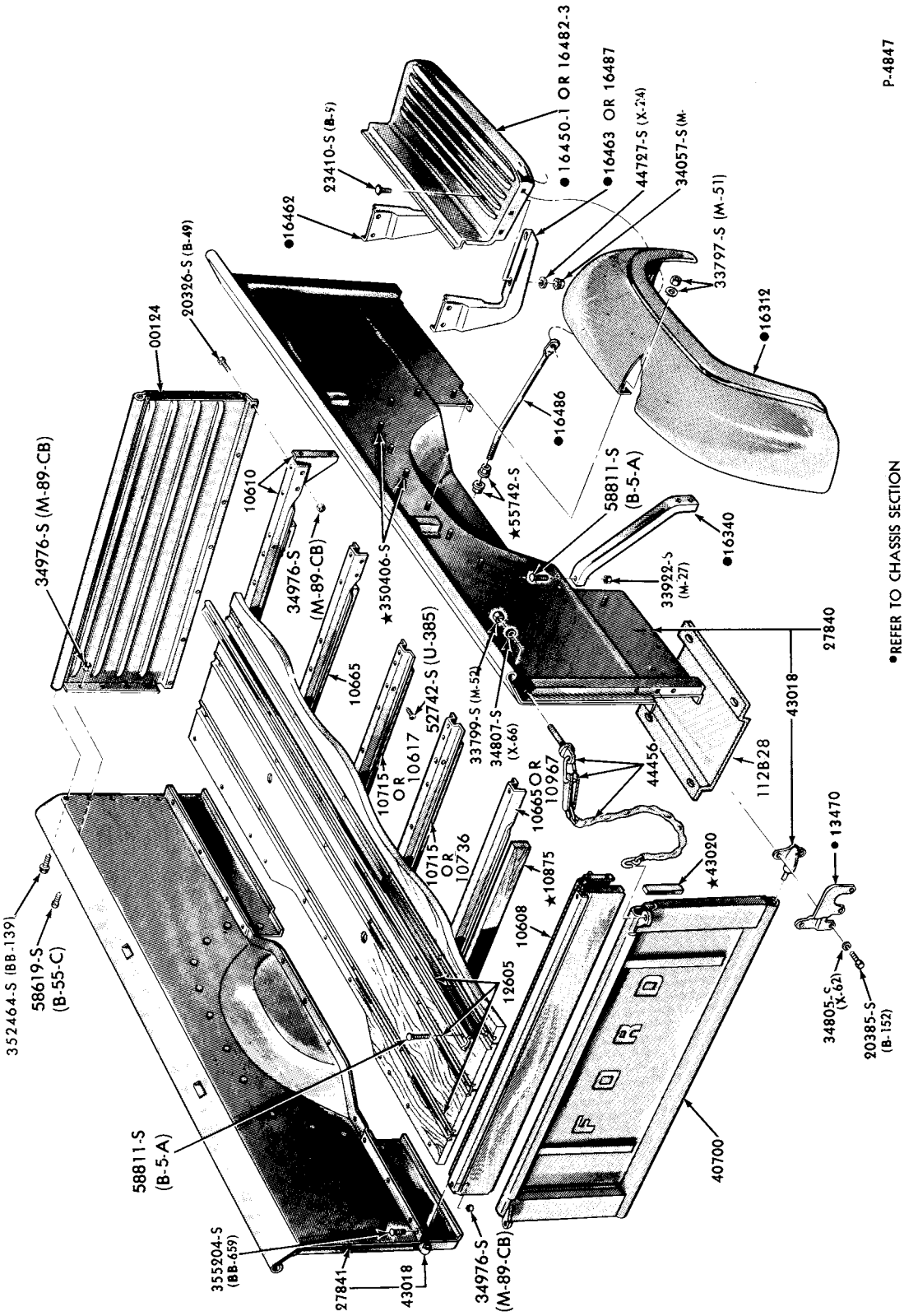

PICKUP BOX and TAILGATE PARTS-TYPICAL
1973/ F100/250-BODY TYPE 83

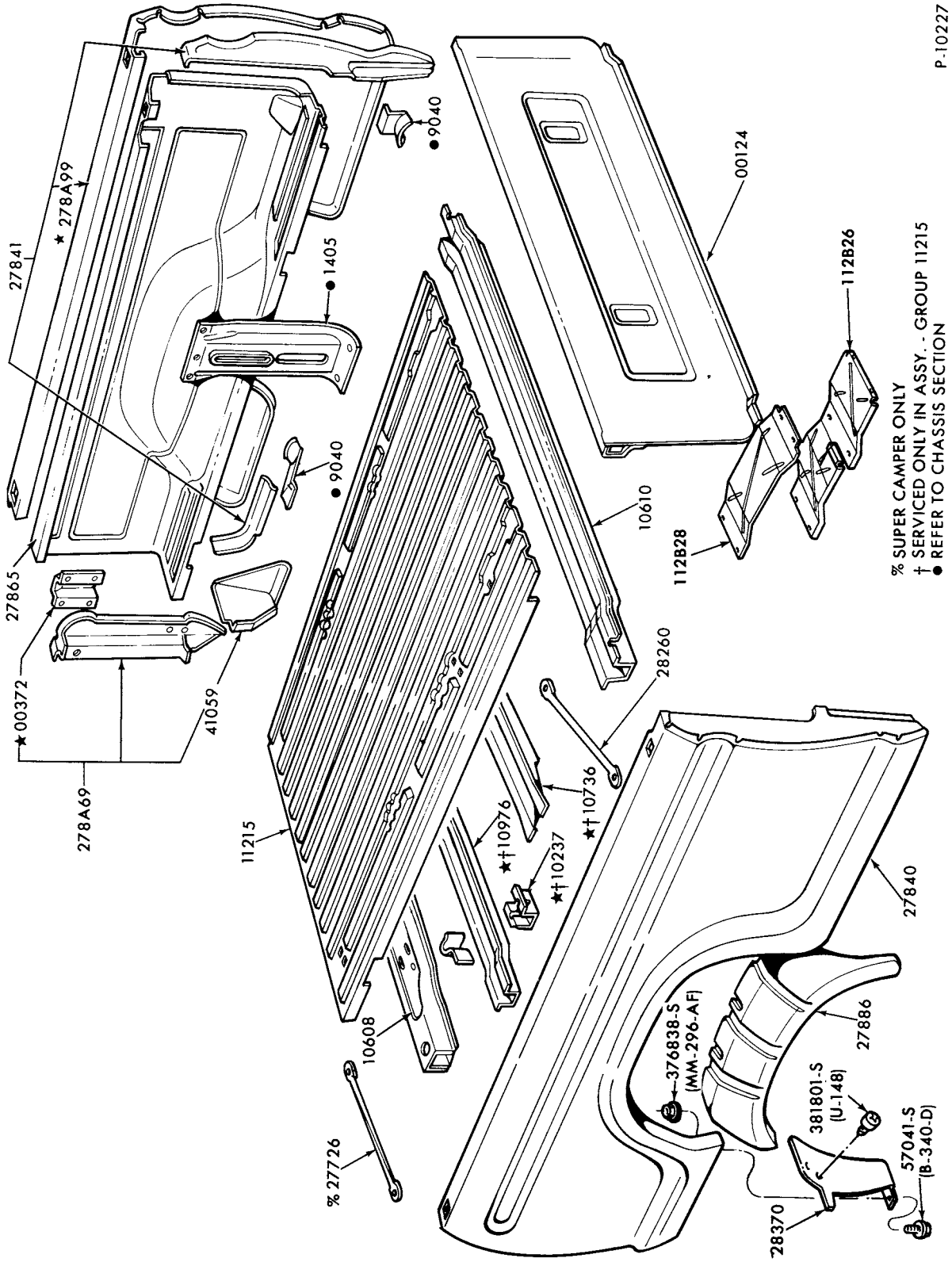

PICKUP BOX PARTS
1973/ F100/350-BODY TYPE 99

COPYRIGHT © 1979 FORD MOTOR COMPANY DEARBORN, MICHIGAN

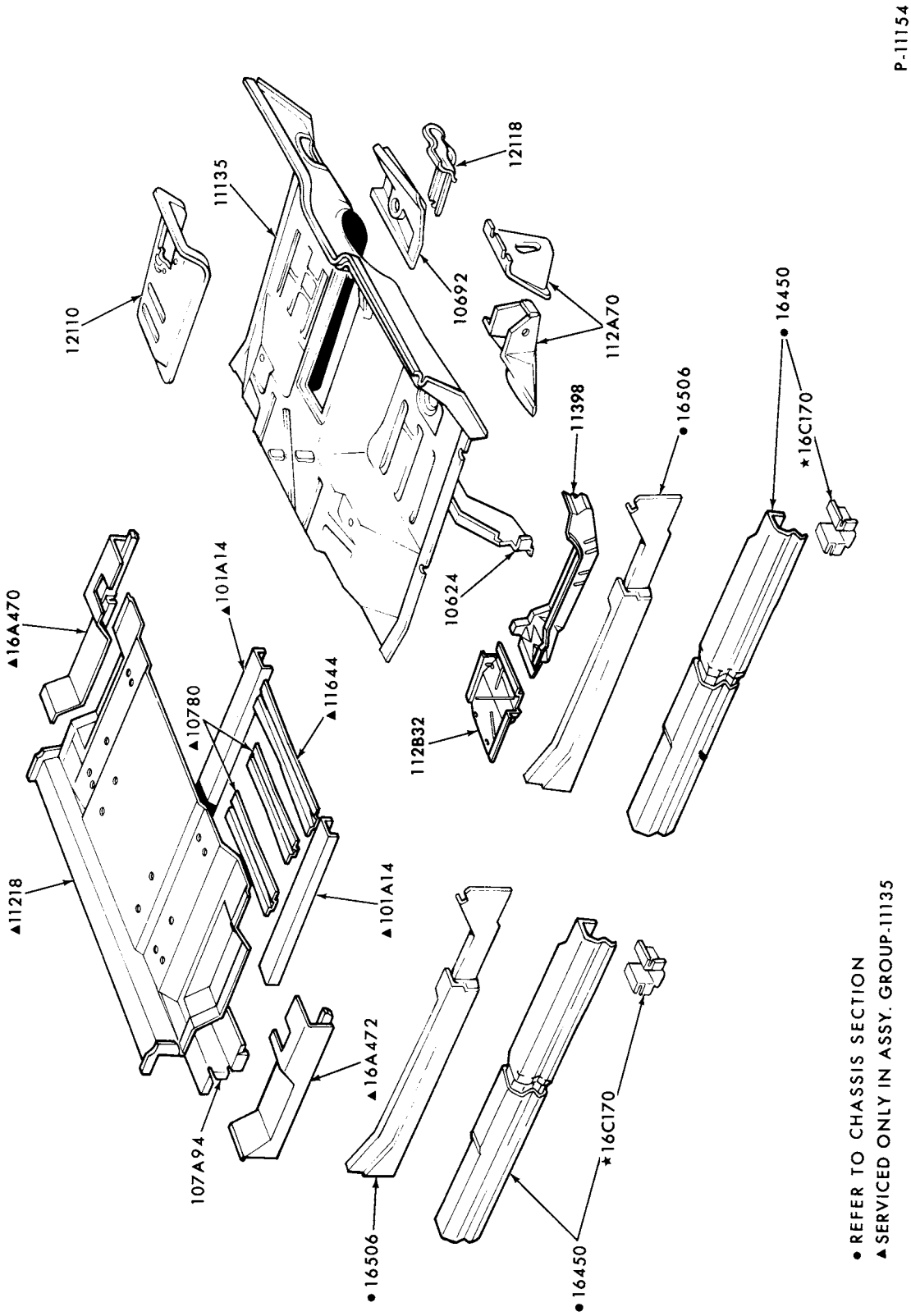

SHEET METAL PARTS - LOWER BODY
1973/77 F250/500 (CREW CAB) and 1978/ F250/350 (CREW CAB)

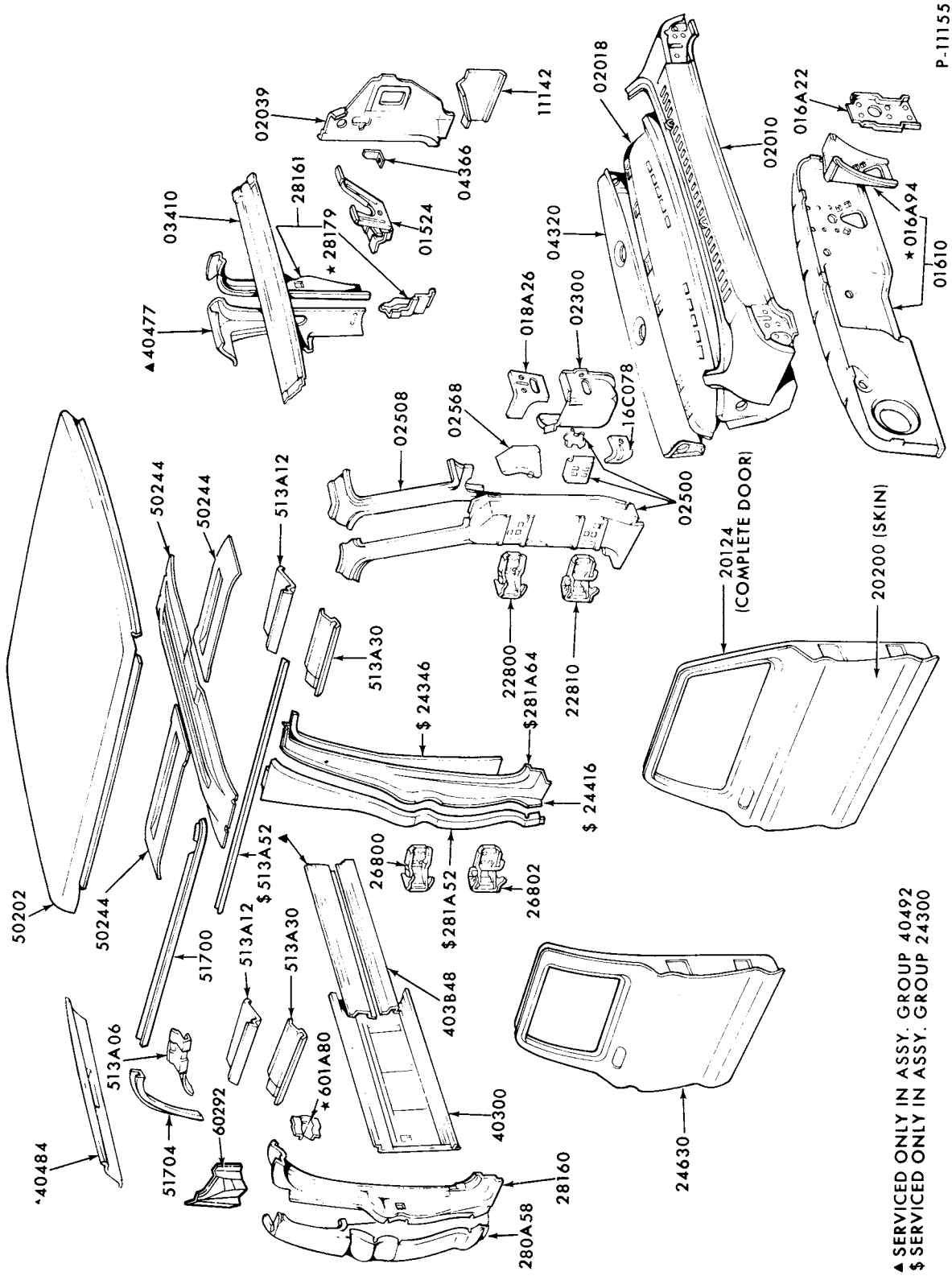

SHEET METAL PARTS - UPPER BODY
1973/ F250/500 (CREW CAB)

COPYRIGHT © 1979 -FORD MOTOR-DEARBORN, MICHIGAN
COMPANY

1973/79 TRUCK SERIES 100/500

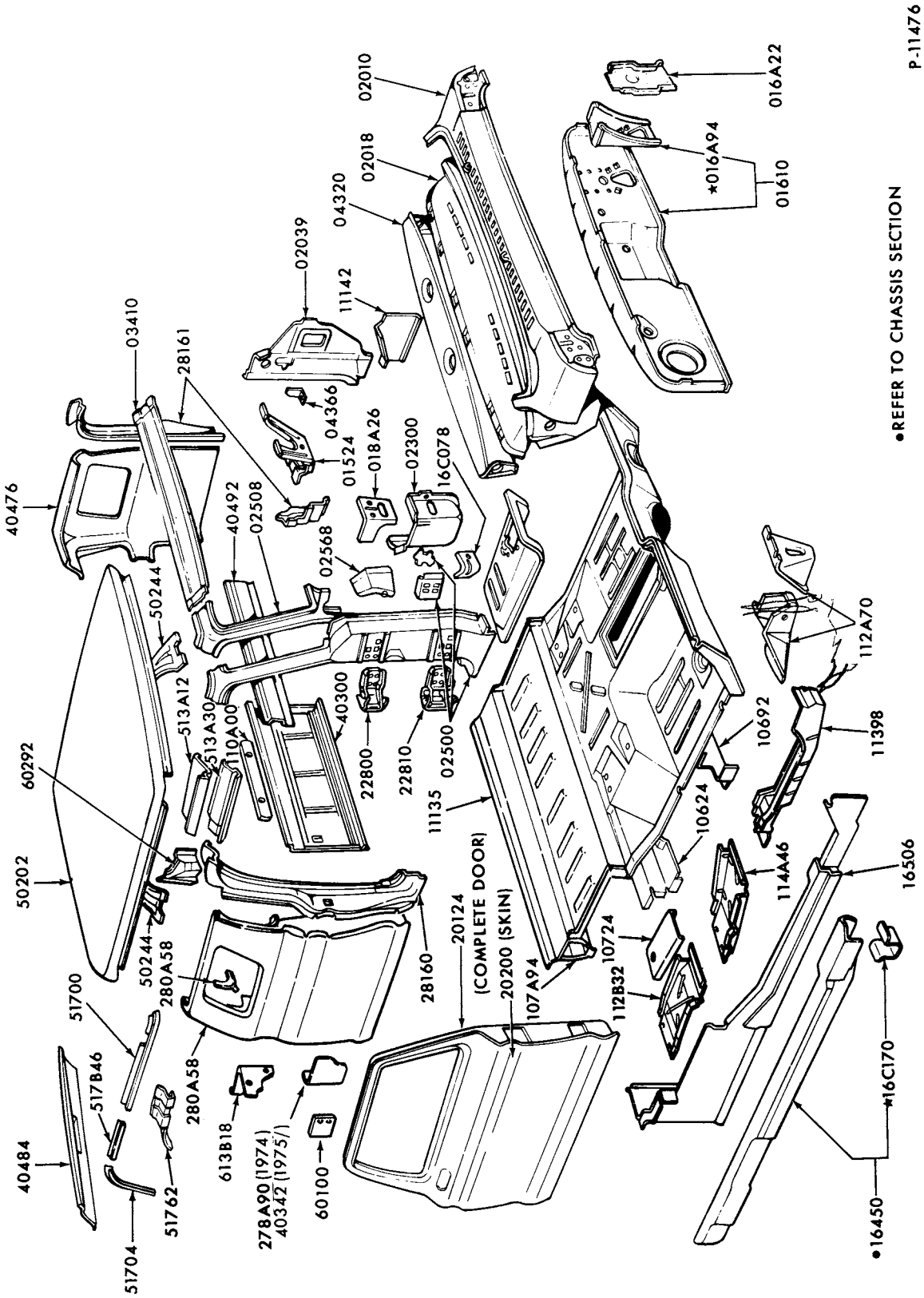

SHEET METAL PARTS - UPPER and LOWER BODY
1974/ F100/350 (SUPER CAB)

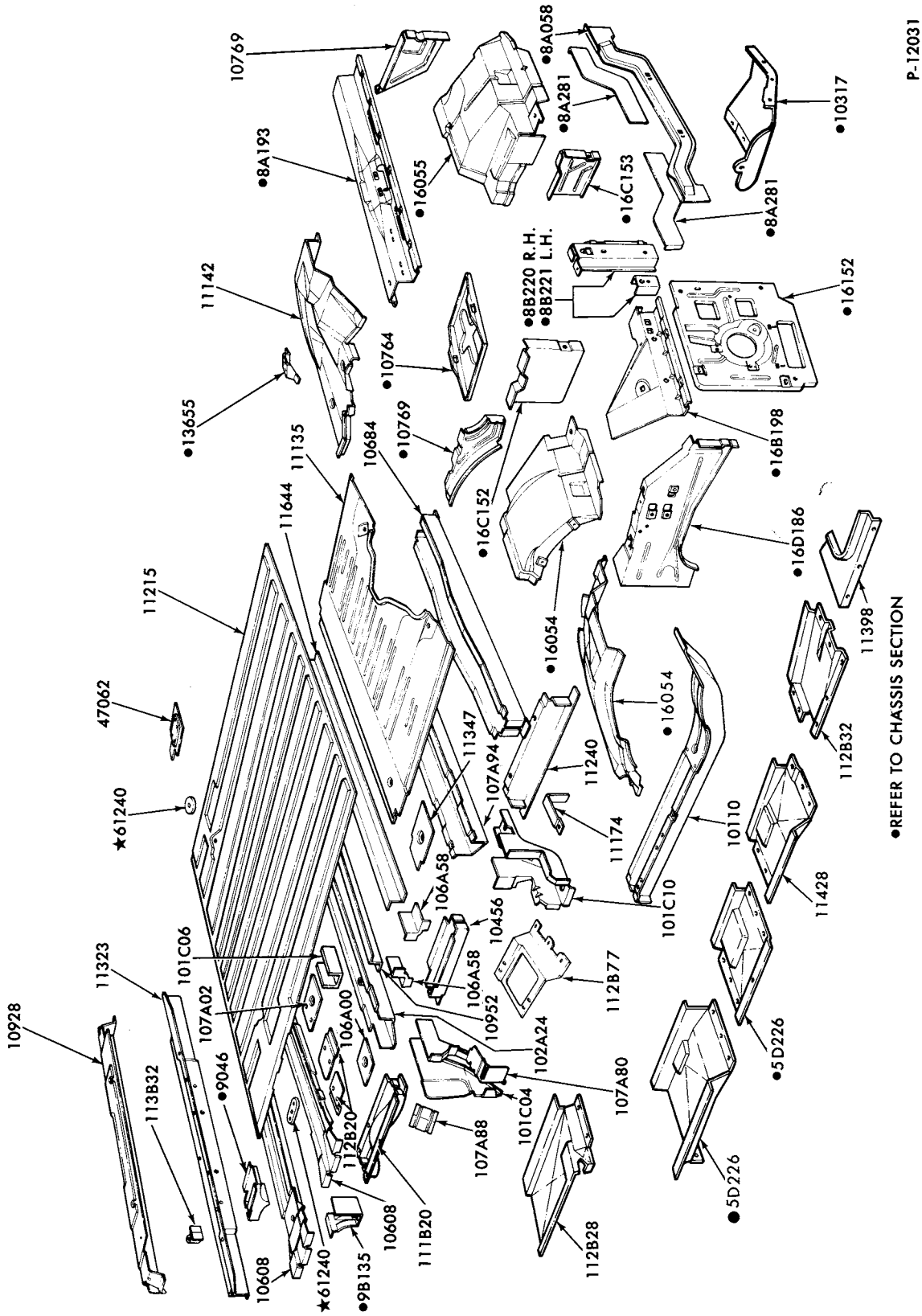

LOWER BODY SHEET METAL PARTS
1975/ E100/350

COPYRIGHT © 1979 FORD MOTOR COMPANY—DEARBORN, MICHIGAN

1973/79 TRUCK SERIES 100/500

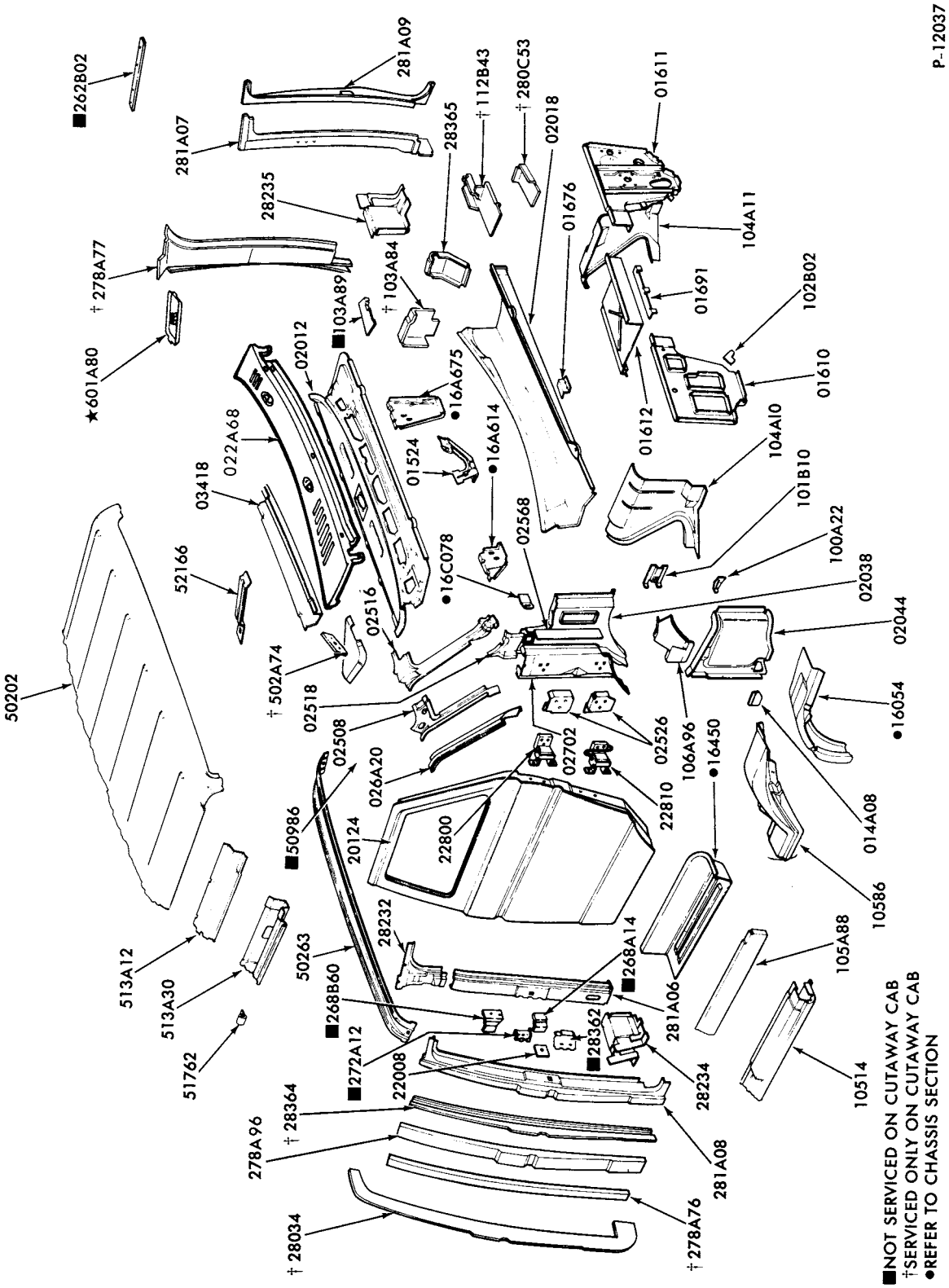

UPPER BODY SHEET METAL PARTS

1975/ E100/350

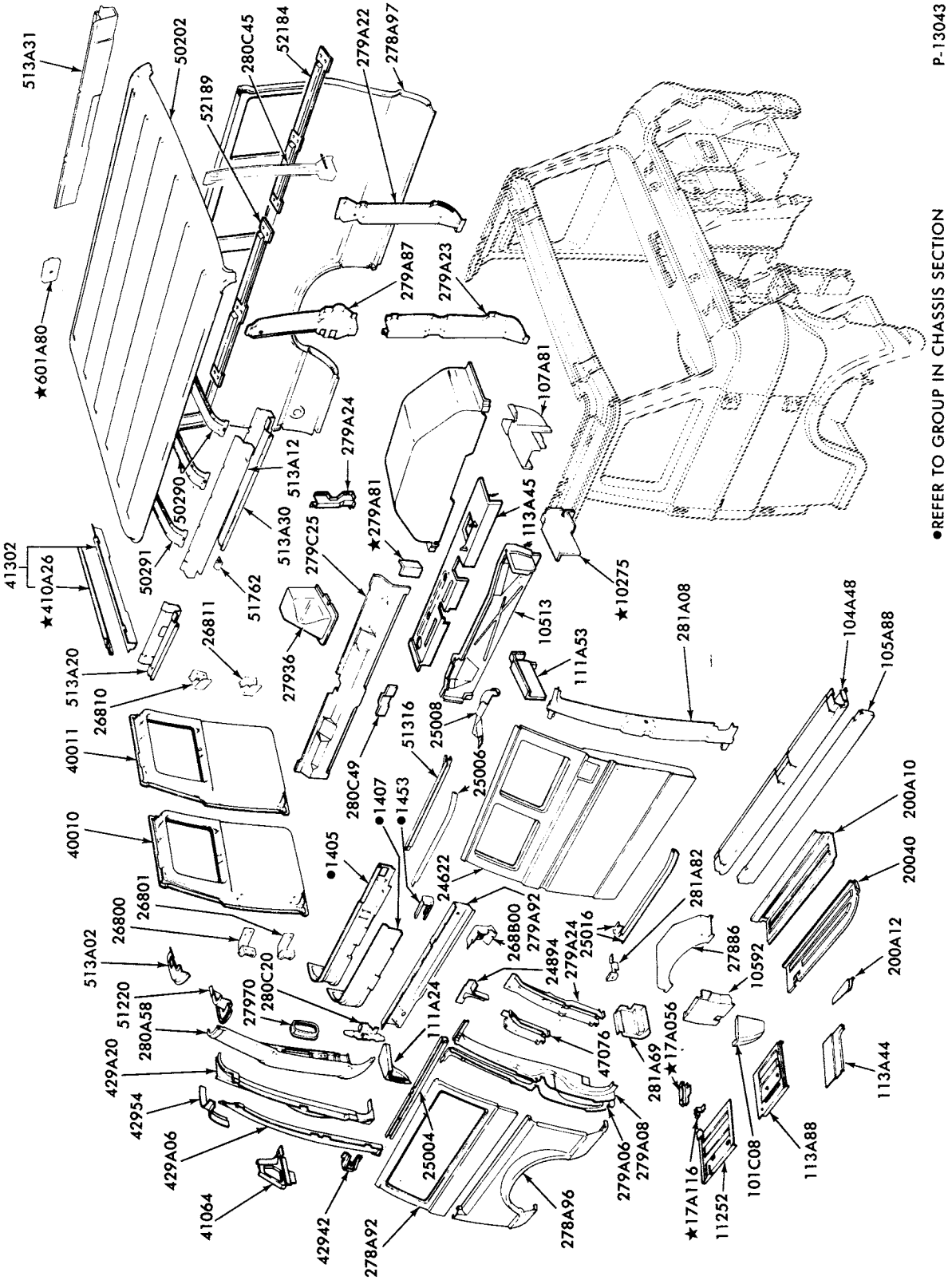

UPPER BODY SHEET METAL PARTS
1975/ E100/350--w/SLIDING DOOR

COPYRIGHT © 1980 FORD MOTOR COMPANY, DEARBORN, MICHIGAN

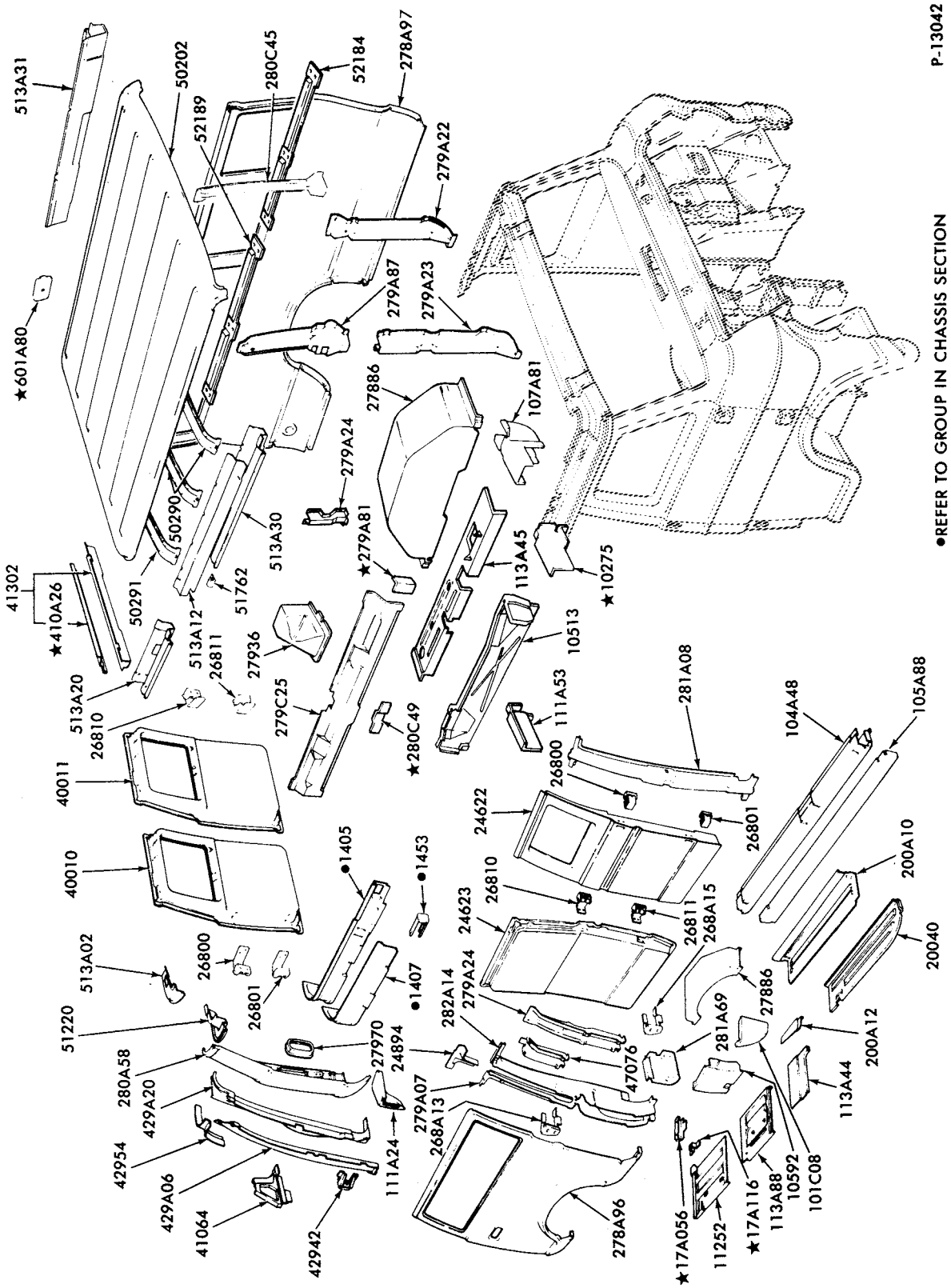

UPPER BODY SHEET METAL PARTS
1975/ E100/350--w/HINGED DOORS

1973/79 TRUCK SERIES 100/500

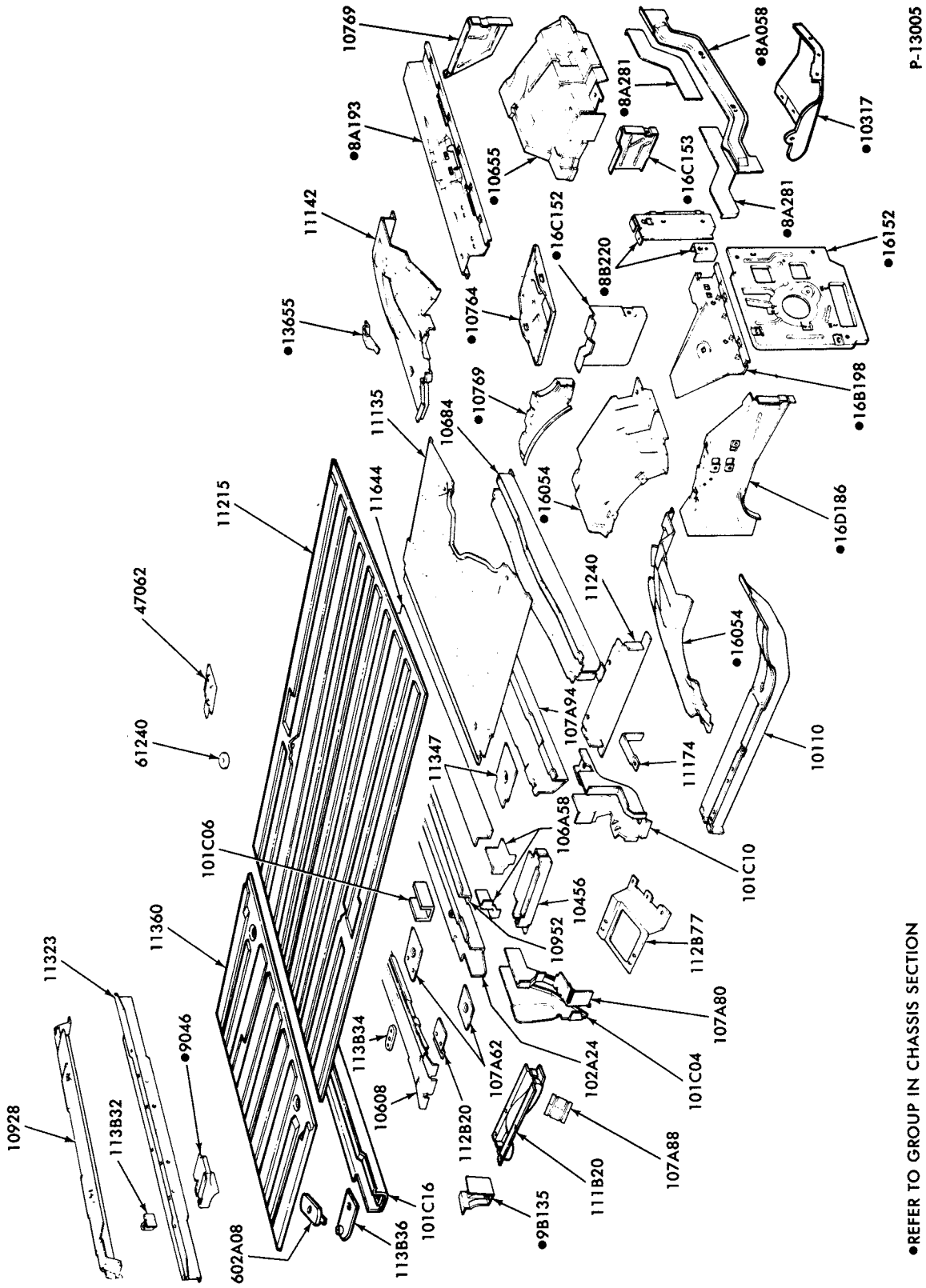

LOWER BODY SHEET METAL PARTS
1978/ E150/350 (SUPER VAN/WAGON)

COPYRIGHT © 1980— FORD MOTOR COMPANY —DEARBORN, MICHIGAN

1973/79 TRUCK SERIES 100/500

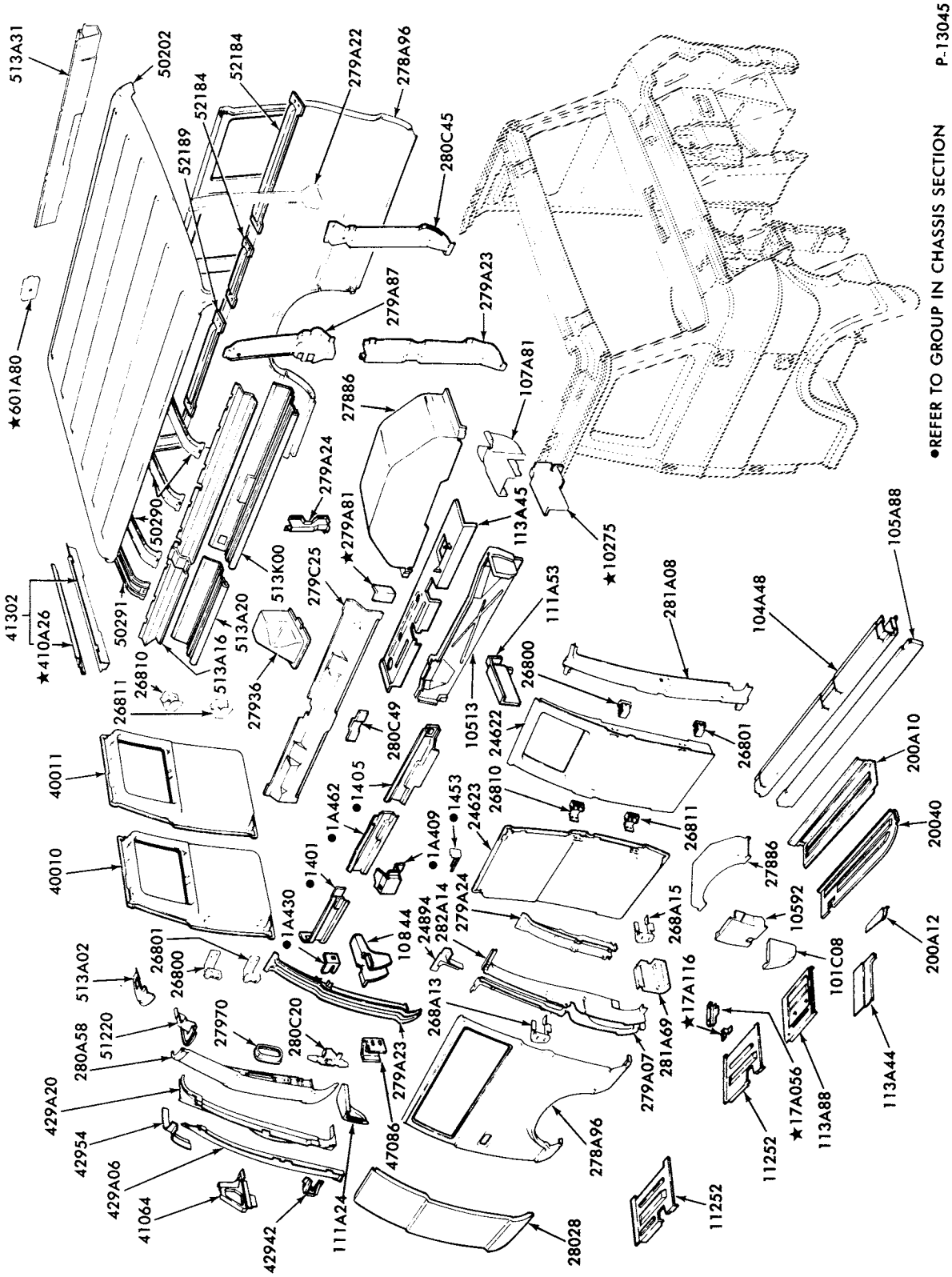

UPPER BODY SHEET METAL PARTS
1978/ E150/350 (SUPER VAN/WAGON)--w/HINGED DOORS

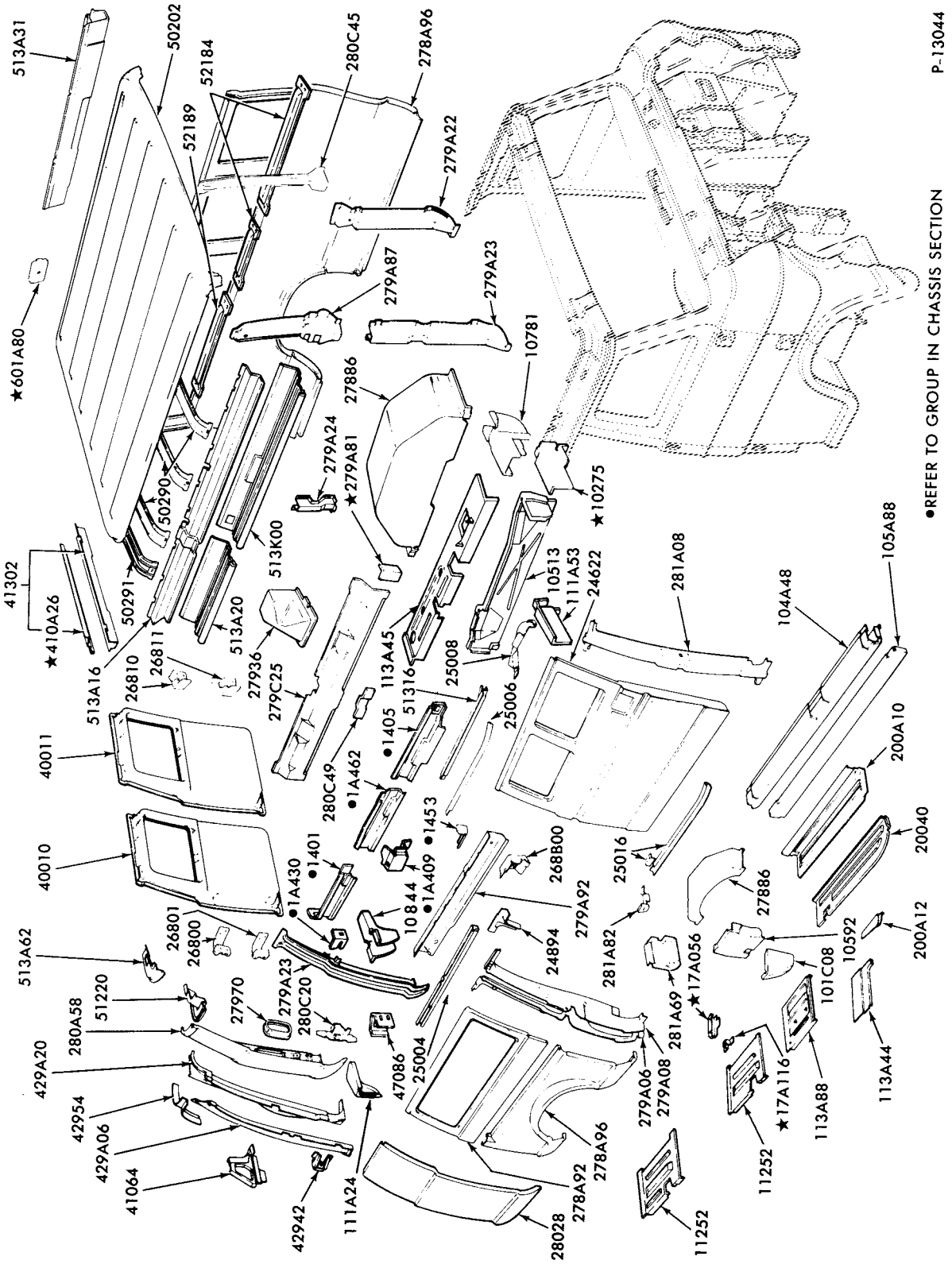

UPPER BODY SHEET METAL PARTS
1978/ E150/350 (SUPER VAN/WAGON)--w/SLIDING DOOR

COPYRIGHT © 1980 FORD MOTOR COMPANY DEARBORN, MICHIGAN

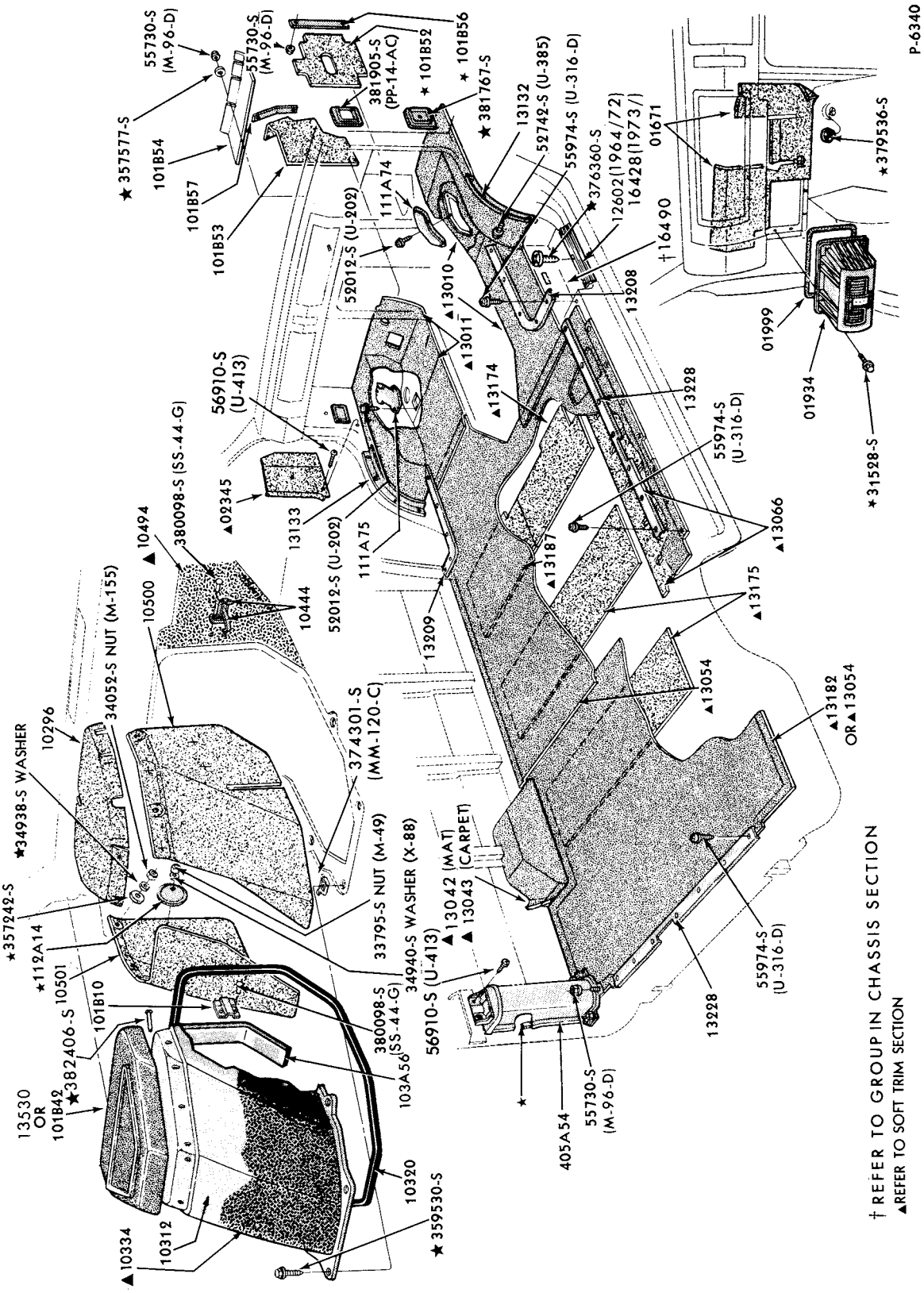

INTERIOR TRIM (FLOOR)
1973/74 E100/350

COPYRIGHT © 1979 -FORD MOTOR-DEARBORN, MICHIGAN COMPANY

1973/79
TRUCK SERIES 100/500

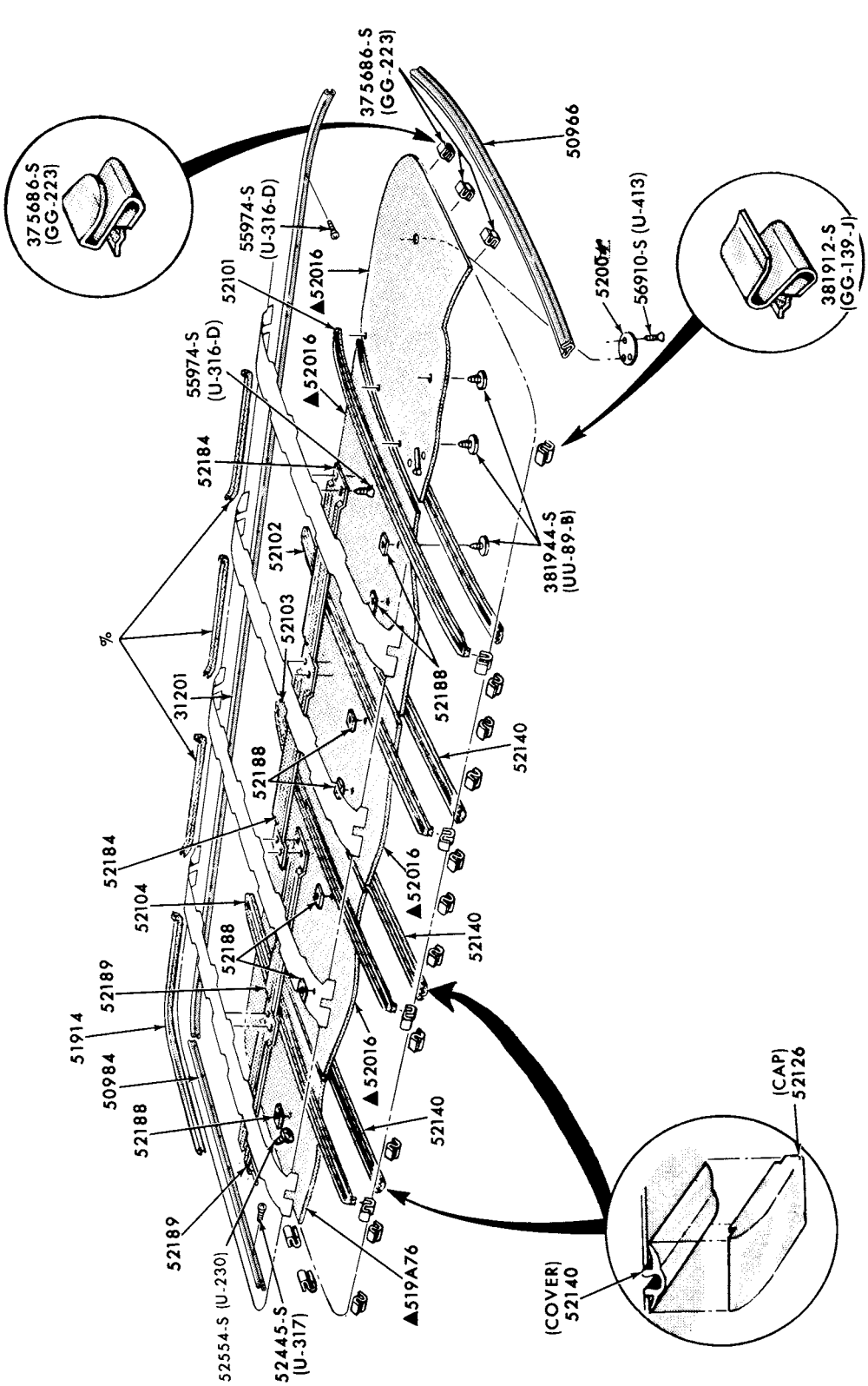

INTERIOR TRIM (ROOF)
1973/74 E100/350

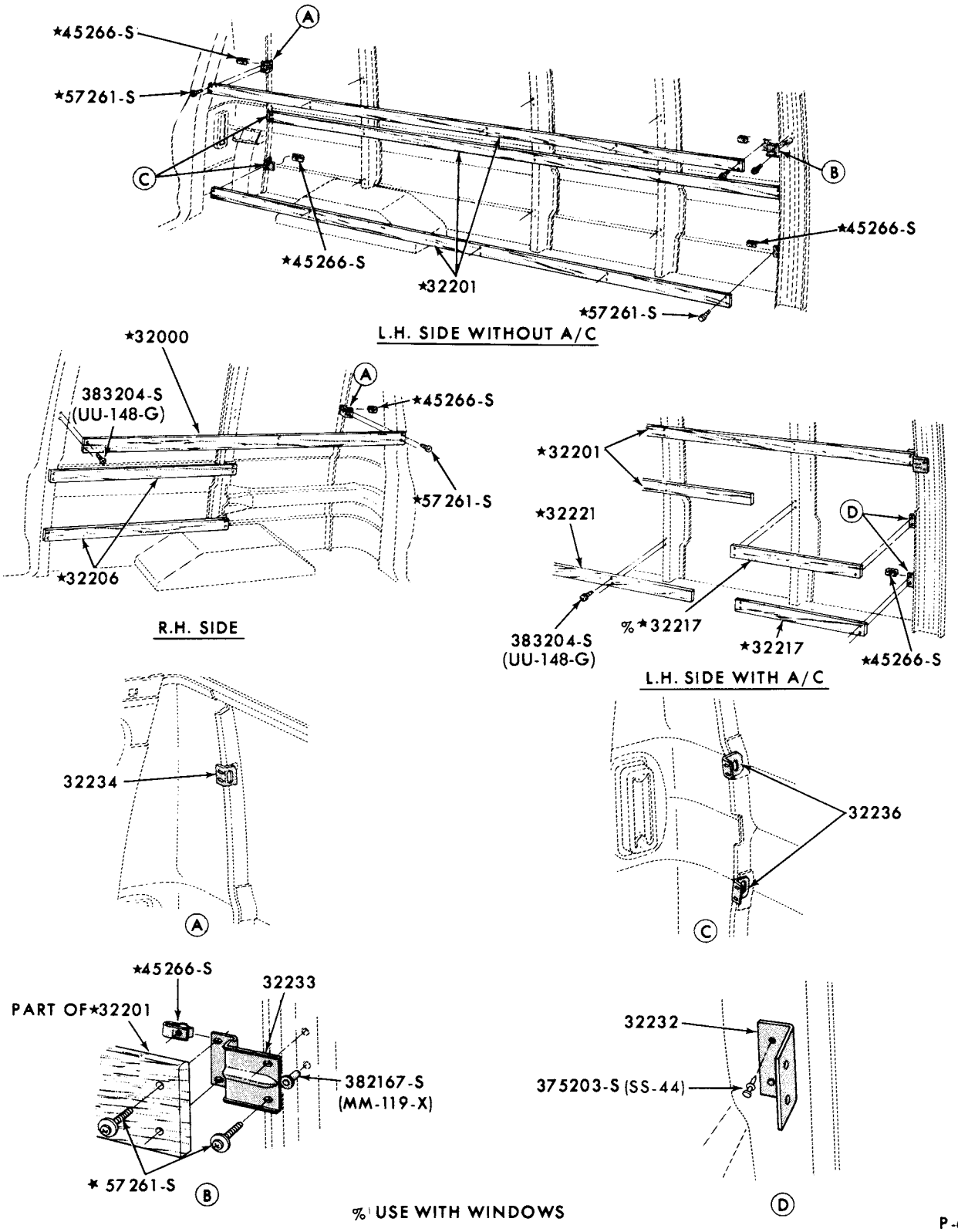

RUB RAIL PARTS
1973/74 E100/300

COPYRIGHT © 1979 FORD MOTOR COMPANY—DEARBORN, MICHIGAN

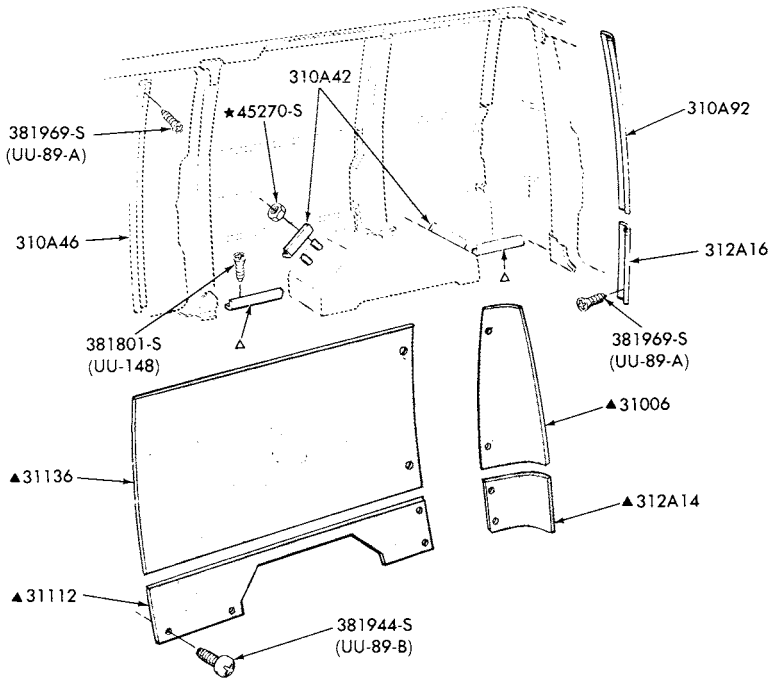

▲REFER TO SOFT TRIM SECTION
△FOR SERVICE USE BASIC 310A39

P-8552

INTERIOR TRIM PANELS-R.H.
1973/74 E100/300--w/o BODY SIDE WINDOW

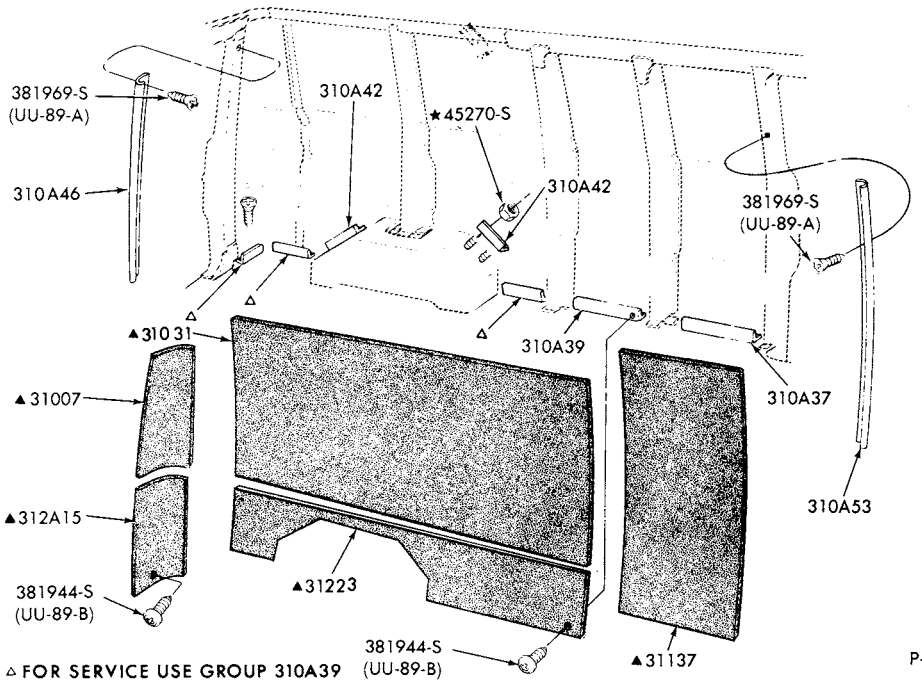

△ FOR SERVICE USE GROUP 310A39
▲ REFER TO GROUP IN SOFT TRIM SECTION

P-8553

INTERIOR TRIM PANELS-L.H.
1973/74 E100/300--w/o BODY SIDE WINDOW

P-9092

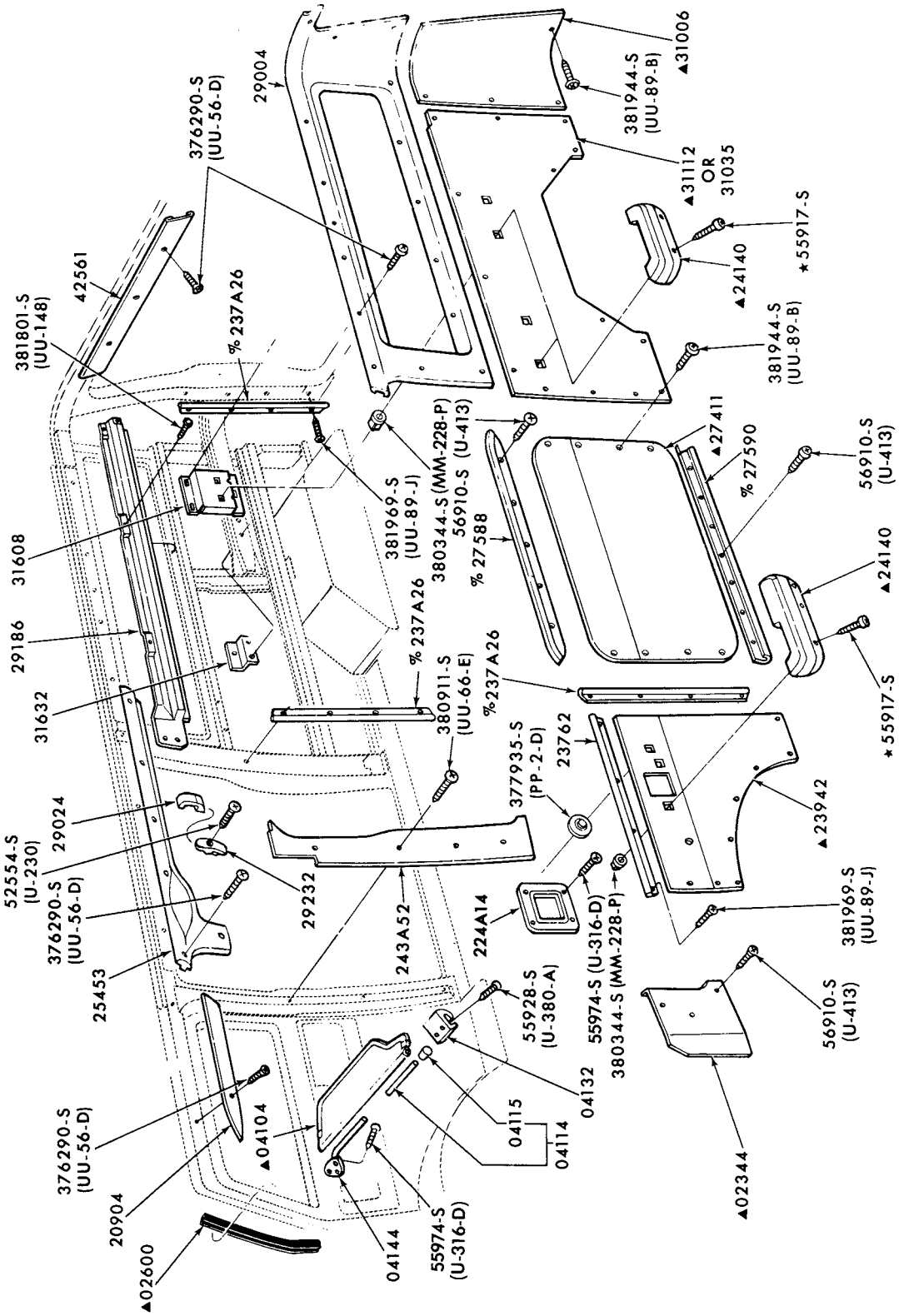

▲REFER TO GROUP IN SOFT TRIM SECTION
% IMPROVISE FROM 23762

INTERIOR TRIM-R.H.
1973/74 E100/300

COPYRIGHT © 1979 FORD MOTOR COMPANY—DEARBORN, MICHIGAN

1973/79 TRUCK SERIES 100/500

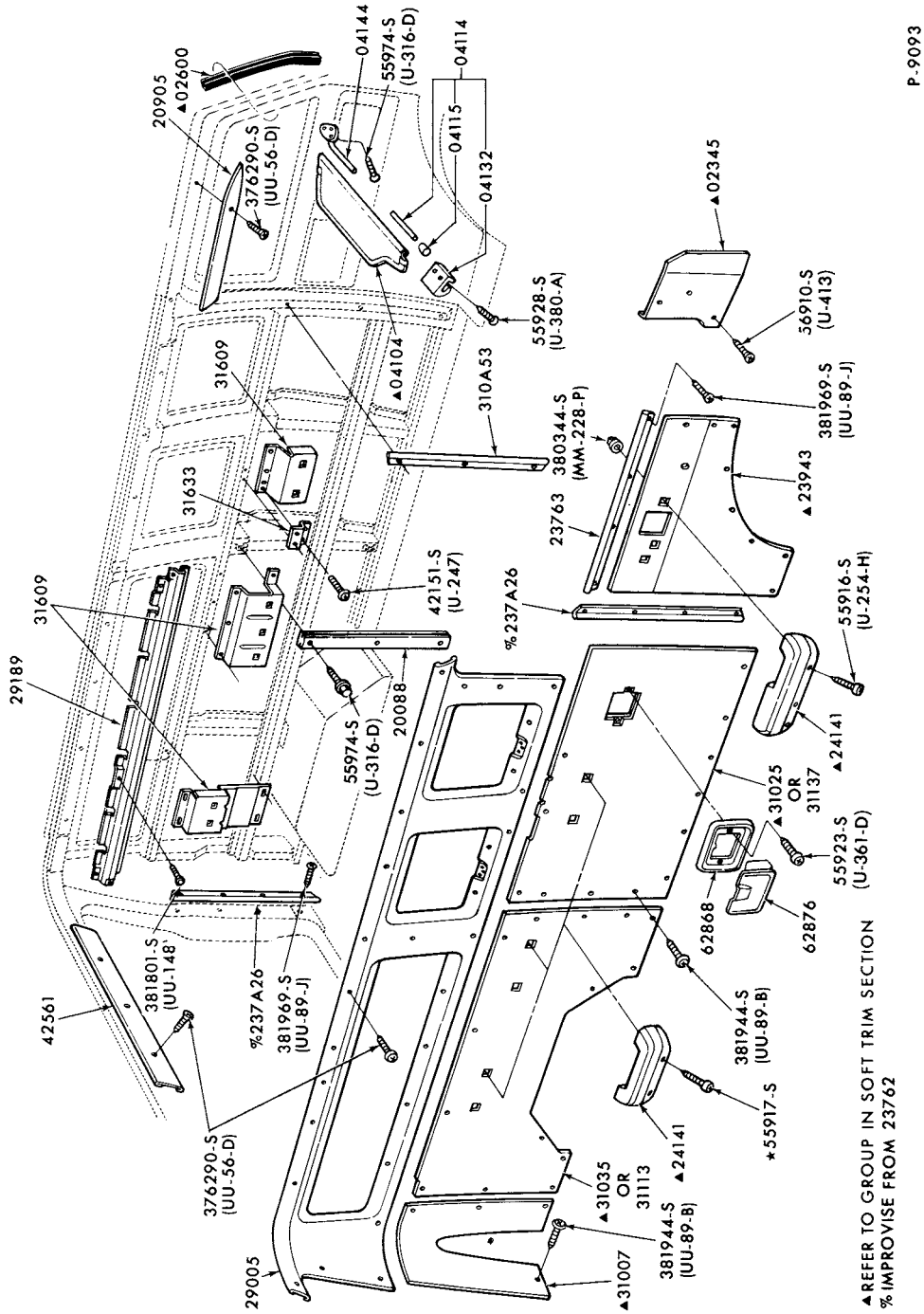

INTERIOR TRIM-L.H.
1973/74 E100/300

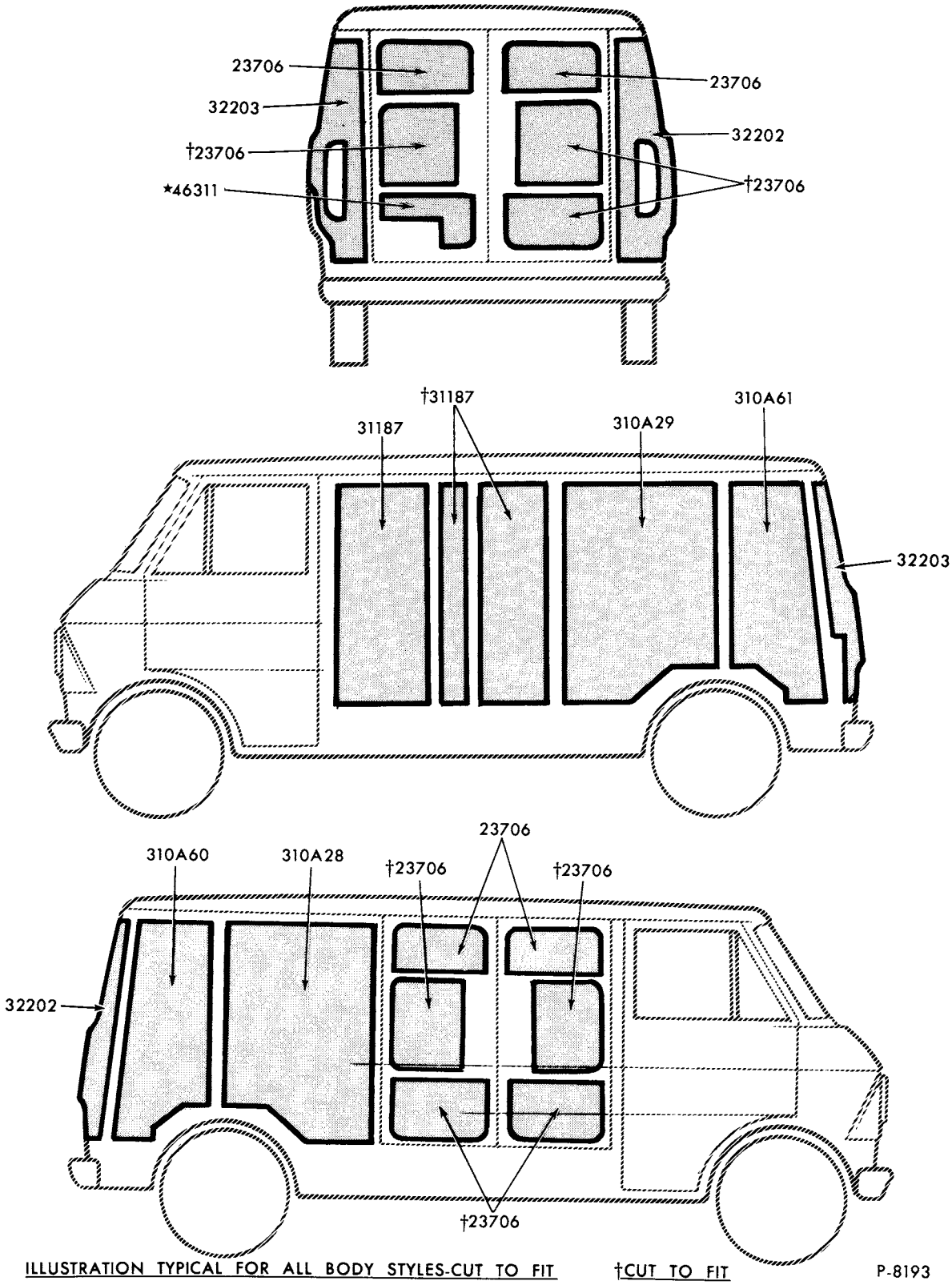

ILLUSTRATION TYPICAL FOR ALL BODY STYLES-CUT TO FIT †CUT TO FIT P-8193

INTERIOR INSULATION
1973/ E100/300--A/C

COPYRIGHT © 1979 FORD MOTOR COMPANY DEARBORN, MICHIGAN

1973/79 TRUCK SERIES 100/500

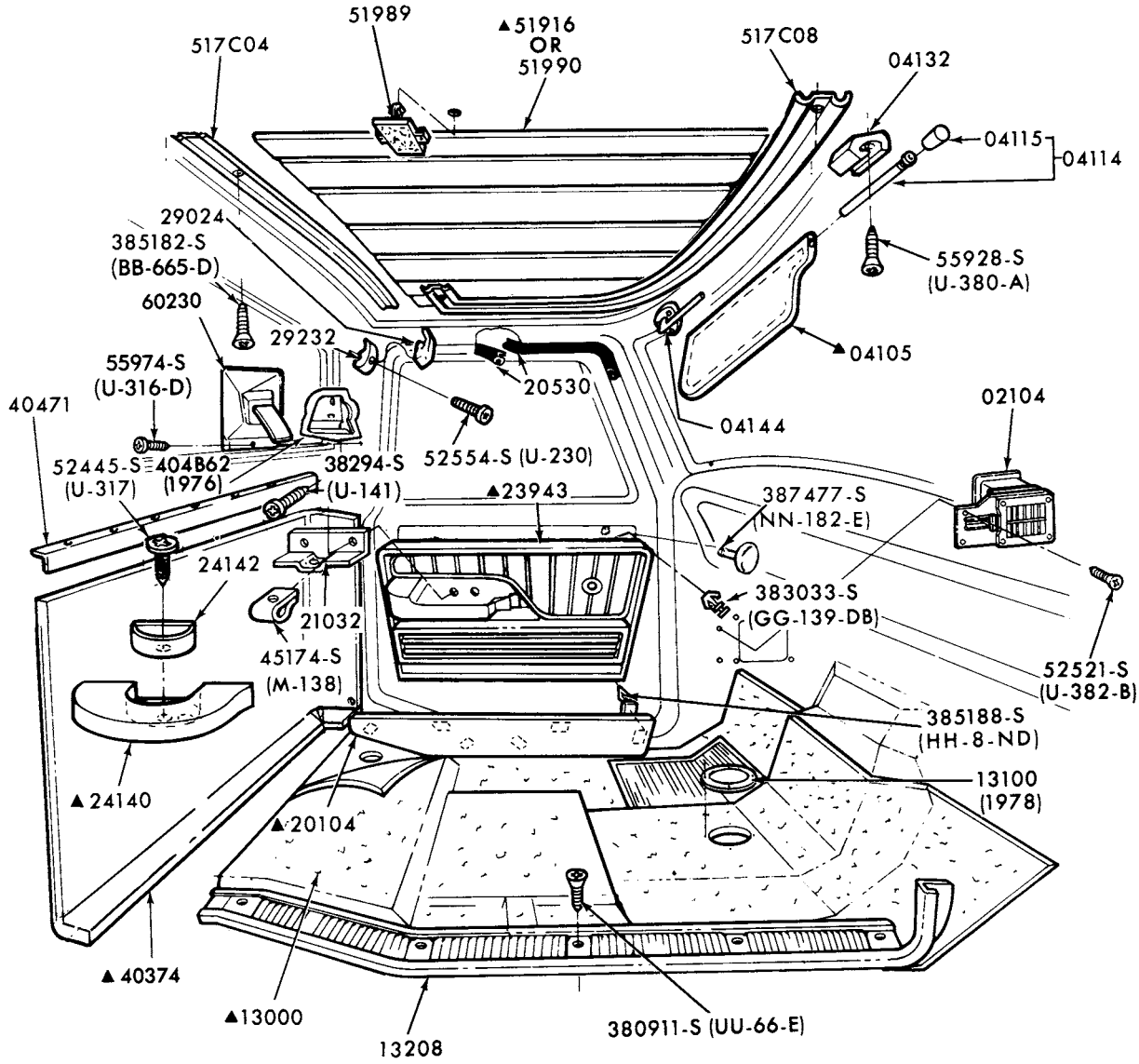

▲ REFER TO SOFT TRIM SECTION

P-10266

INTERIOR TRIM
1973/77 F100/500 (REGULAR CAB) and 1978/ F100/350 (REGULAR CAB)

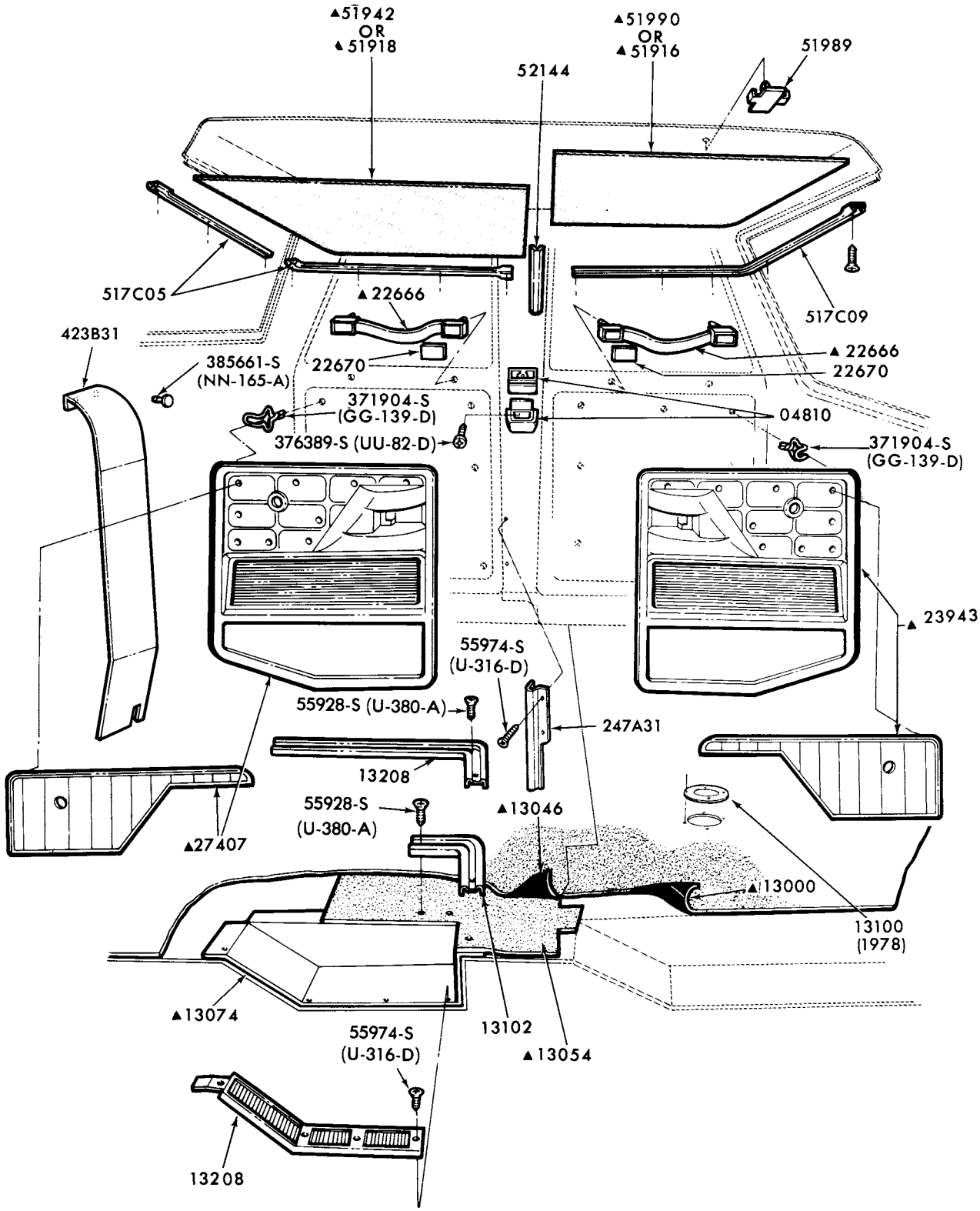

▲ REFER TO SOFT TRIM SECTION

P-11160

INTERIOR TRIM
1973/77 F250/500 (CREW CAB) and 1978/ F250/350 (CREW CAB)

COPYRIGHT © 1979 --FORD MOTOR--DEARBORN, MICHIGAN
COMPANY

1973/79 TRUCK SERIES 100/500

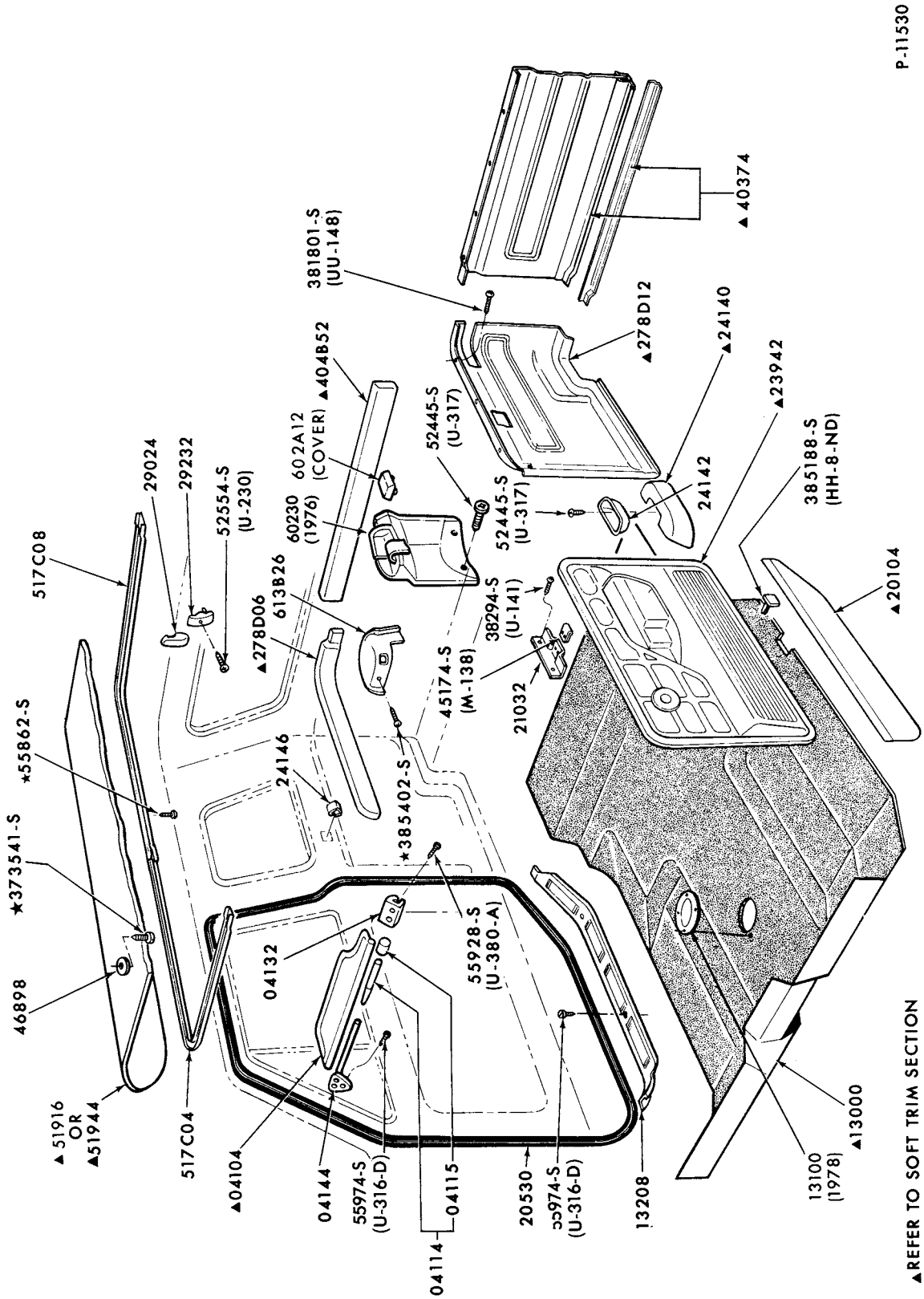

INTERIOR TRIM
1974/ F100/350 (SUPER CAB)

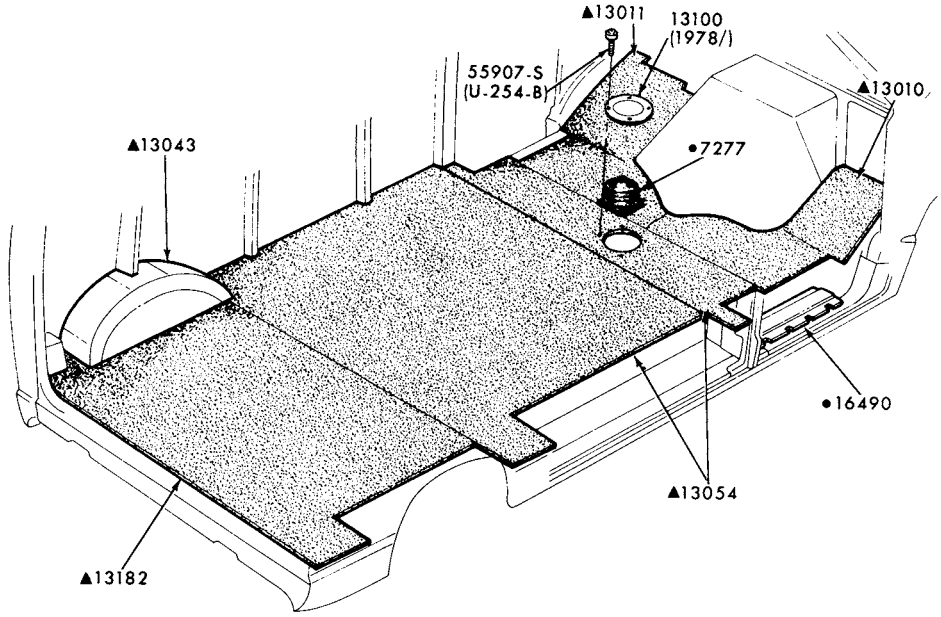

▲ REFER TO GROUP IN SOFT TRIM
• REFER TO GROUP IN CHASSIS SECTION

P-12112

INTERIOR TRIM (FLOOR MATS)
1975/ E100/350

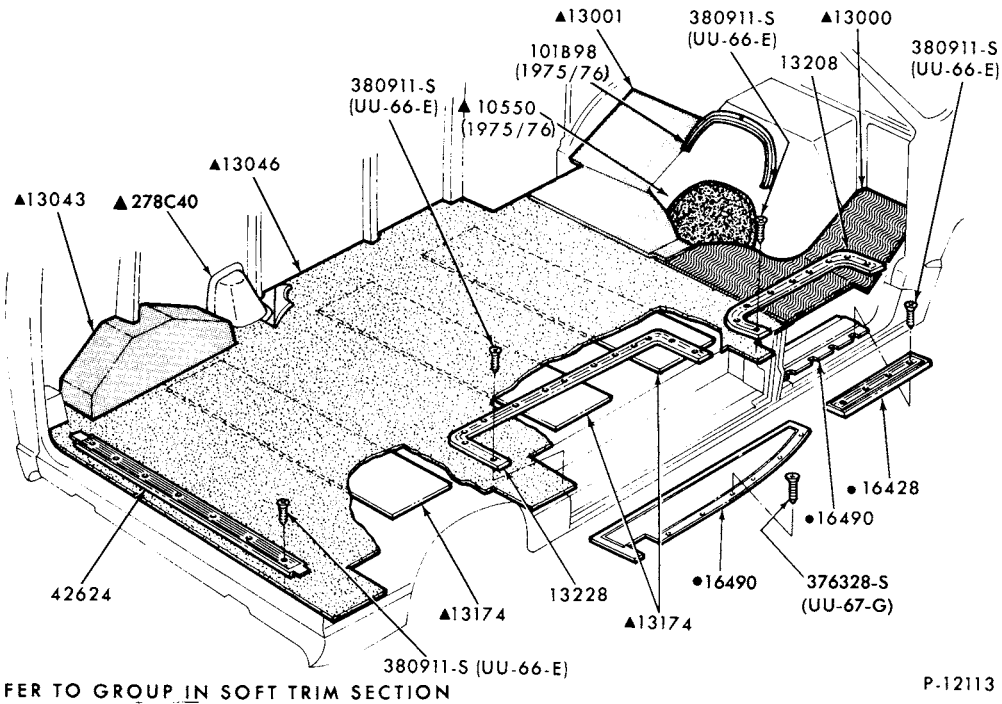

▲ REFER TO GROUP IN SOFT TRIM SECTION
• REFER TO GROUP IN CHASSIS SECTION

P-12113

INTERIOR TRIM (FLOOR CARPETS)
1975/ E100/350

COPYRIGHT © 1979 FORD MOTOR COMPANY—DEARBORN, MICHIGAN

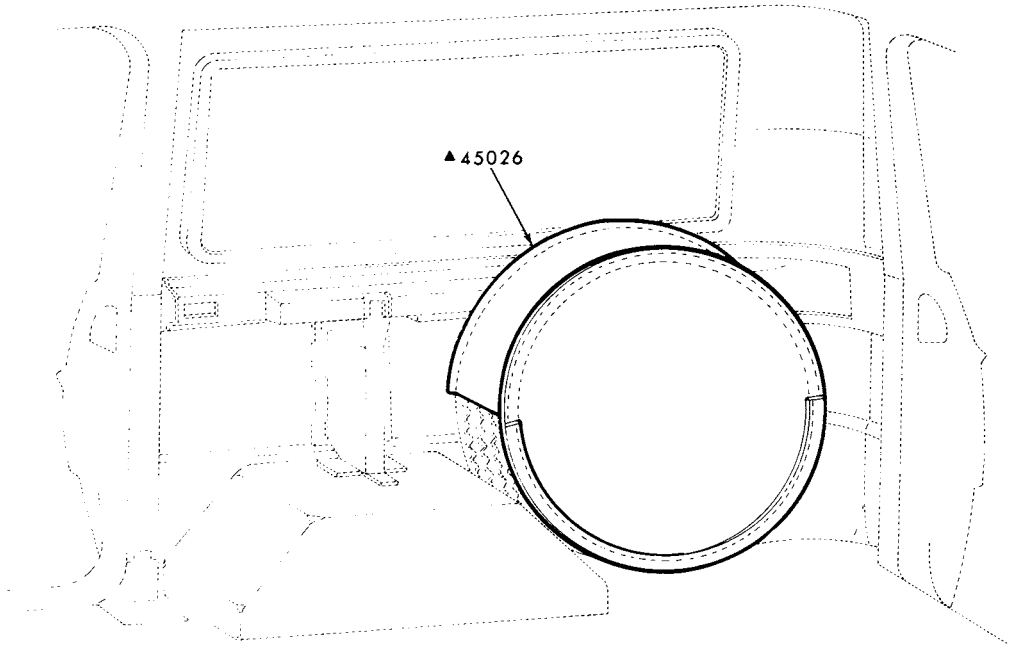

▲REFER TO GROUP IN SOFT TRIM SECTION

P-12140

SPARE TIRE COVER
1975/ E100/350

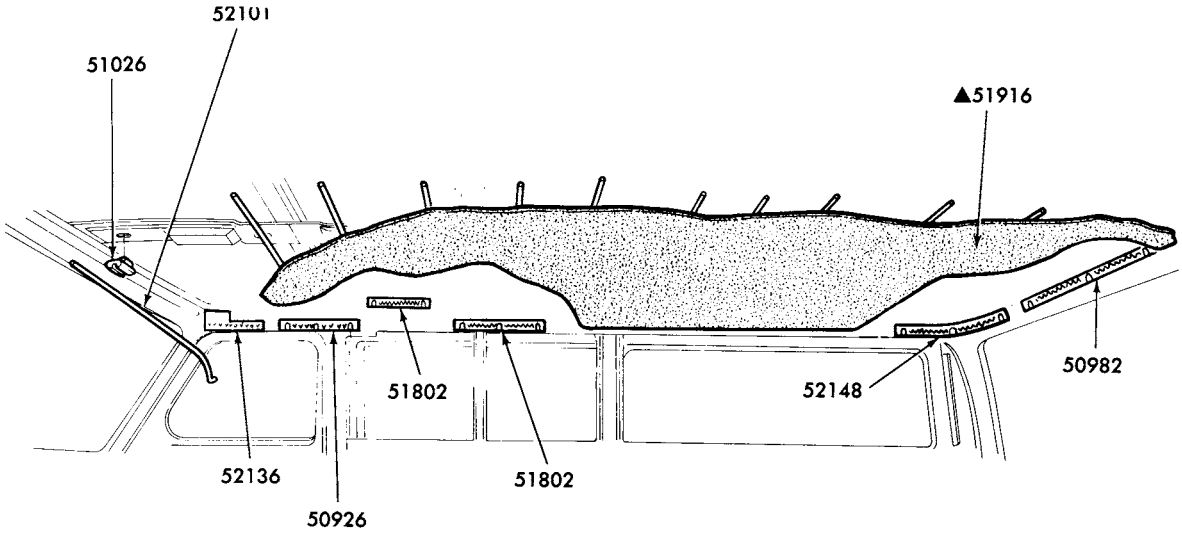

▲REFER TO GROUP IN SOFT TRIM SECTION

P-12380

INTERIOR TRIM (HEADLINING)
1975/ E100/350

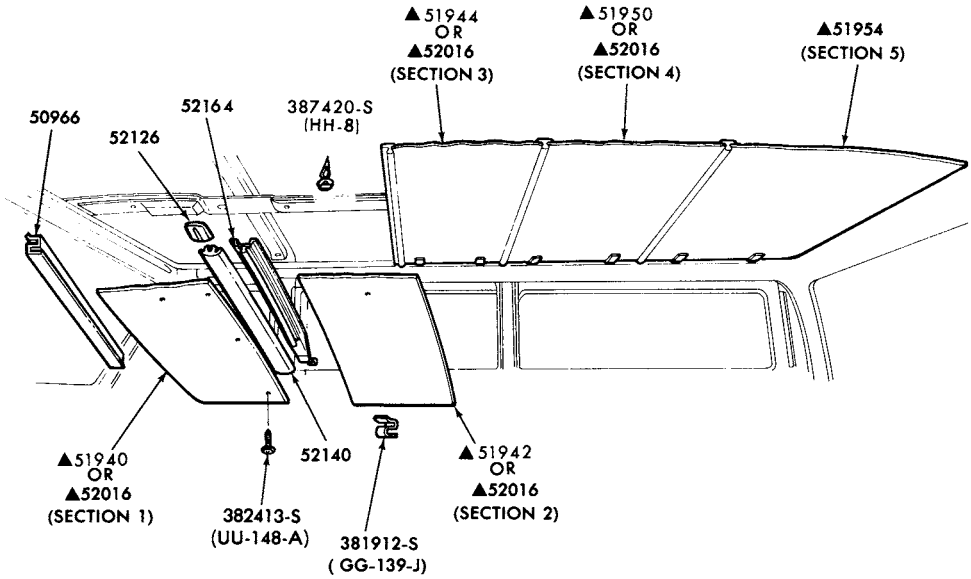

▲REFER TO GROUP IN SOFT TRIM SECTION

P-12381

INTERIOR TRIM (ROOF PANELS)
1975/ E100/350

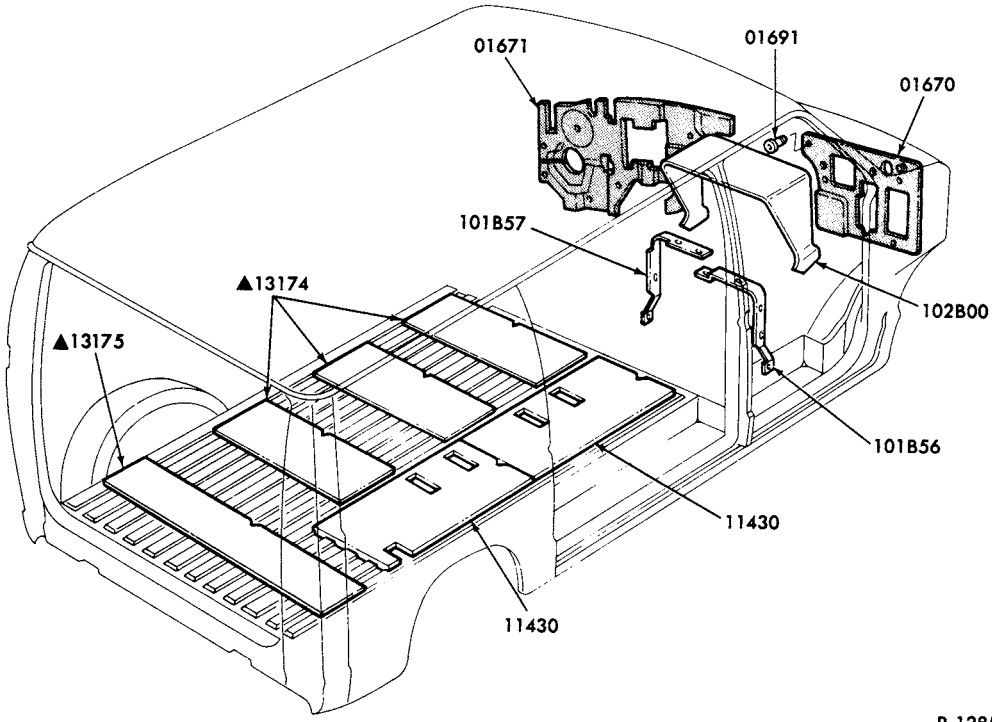

▲REFER TO GROUP IN SOFT TRIM SECTION

P-12855

INTERIOR TRIM (FLOOR INSULATORS)
1975/ E100/350

COPYRIGHT © 1979 FORD MOTOR COMPANY—DEARBORN, MICHIGAN

1973/79
TRUCK SERIES 100/500

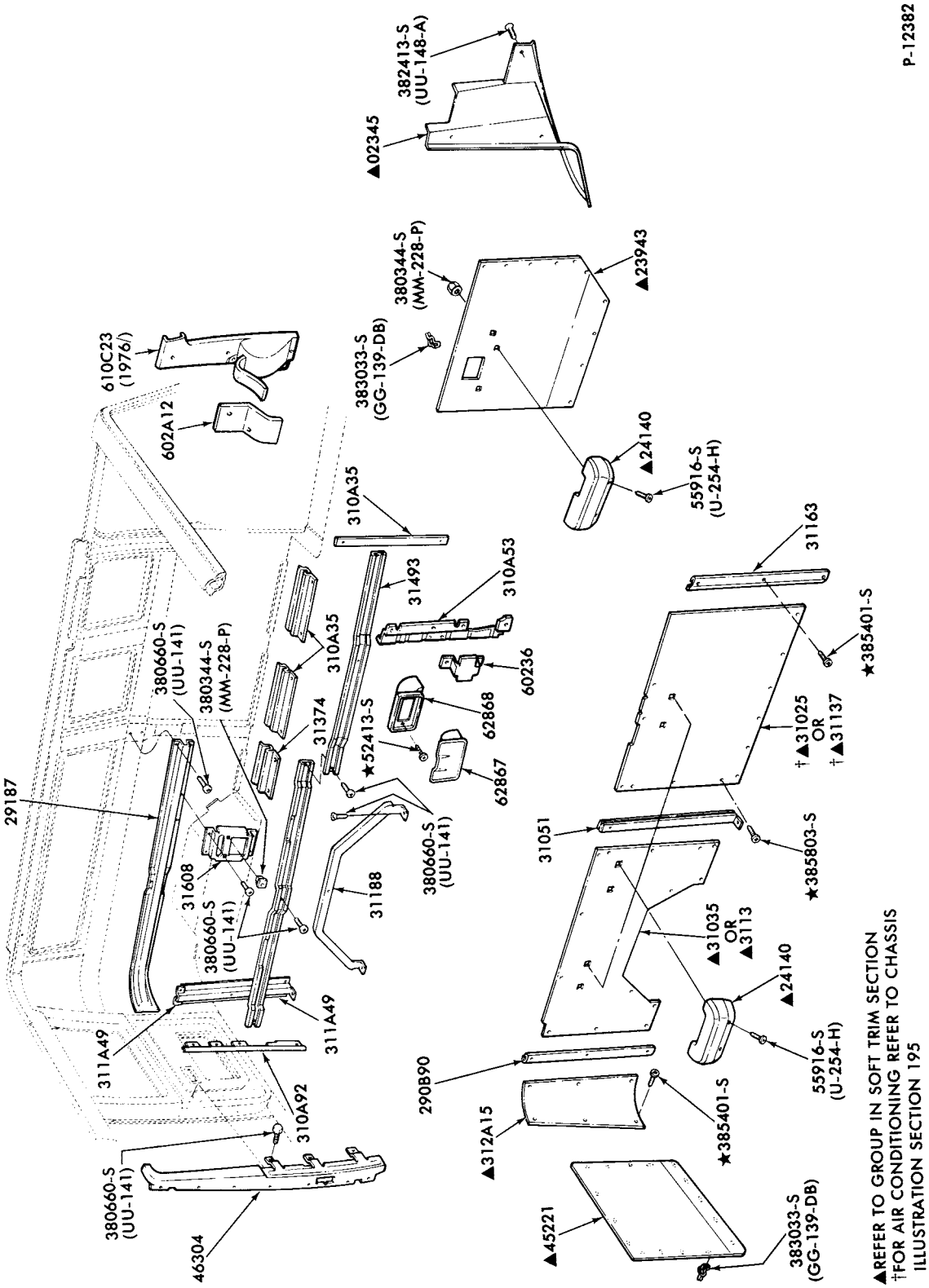

INTERIOR TRIM PANELS and RELATED PARTS - L.H.
1975/ E100/350--w/WINDOWS

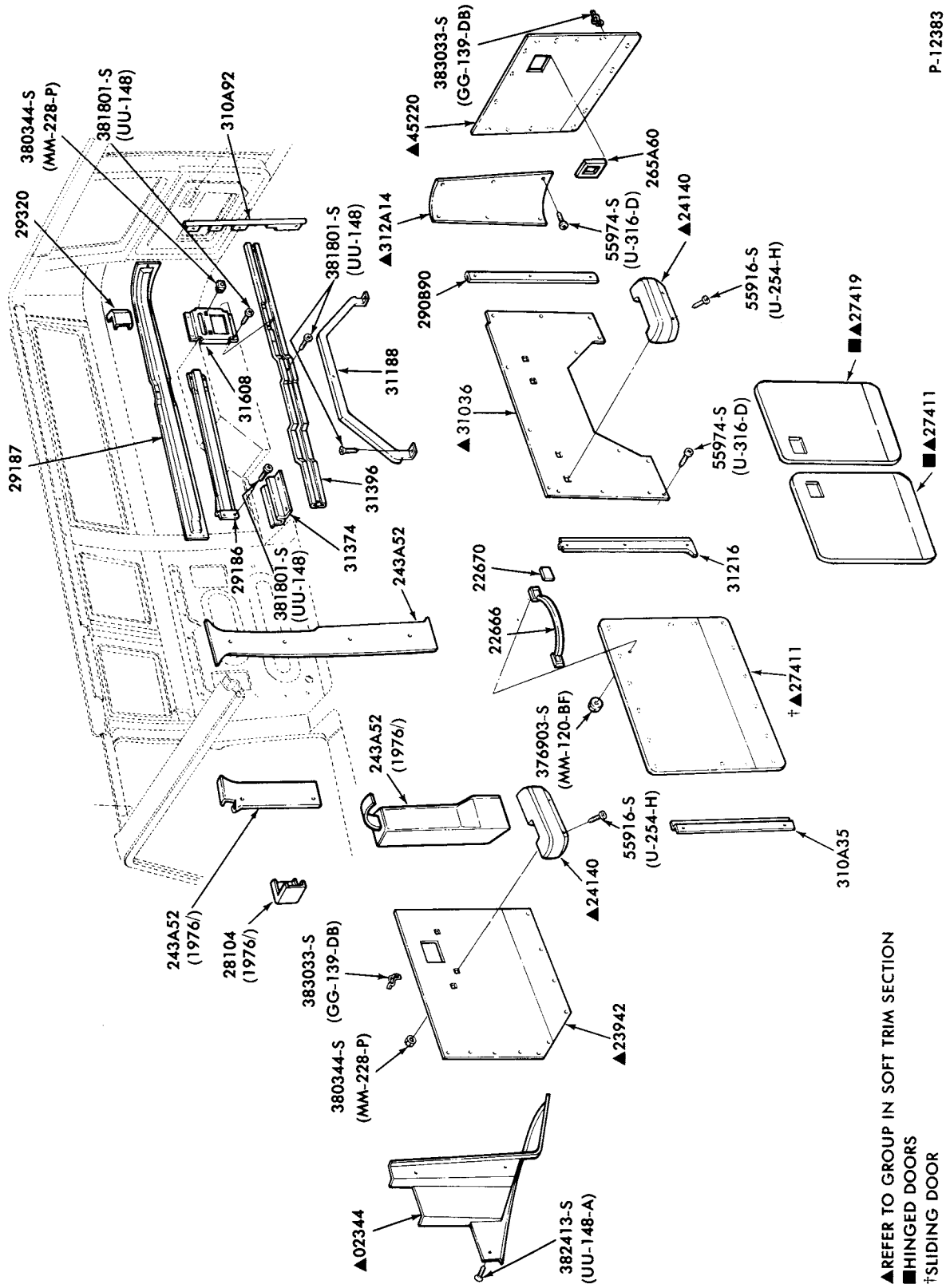

INTERIOR TRIM PANELS and RELATED PARTS - R.H.
1975/79 E100/350--w/WINDOWS

COPYRIGHT © 1979 FORD MOTOR COMPANY - DEARBORN, MICHIGAN

1973/79
TRUCK SERIES 100/500

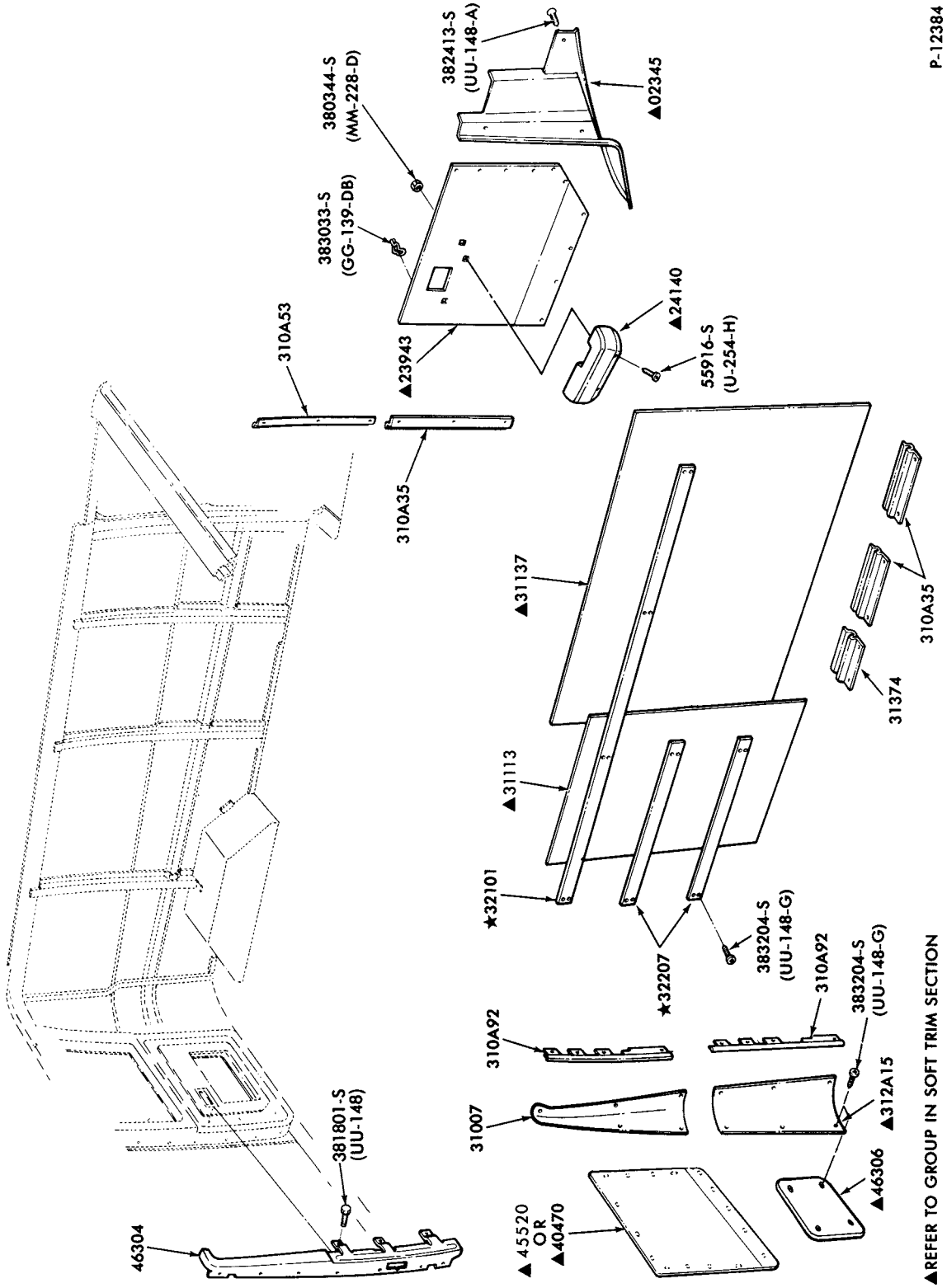

INTERIOR TRIM PANELS and RELATED PARTS - L.H.
1975/79 E100/350--w/o WINDOWS

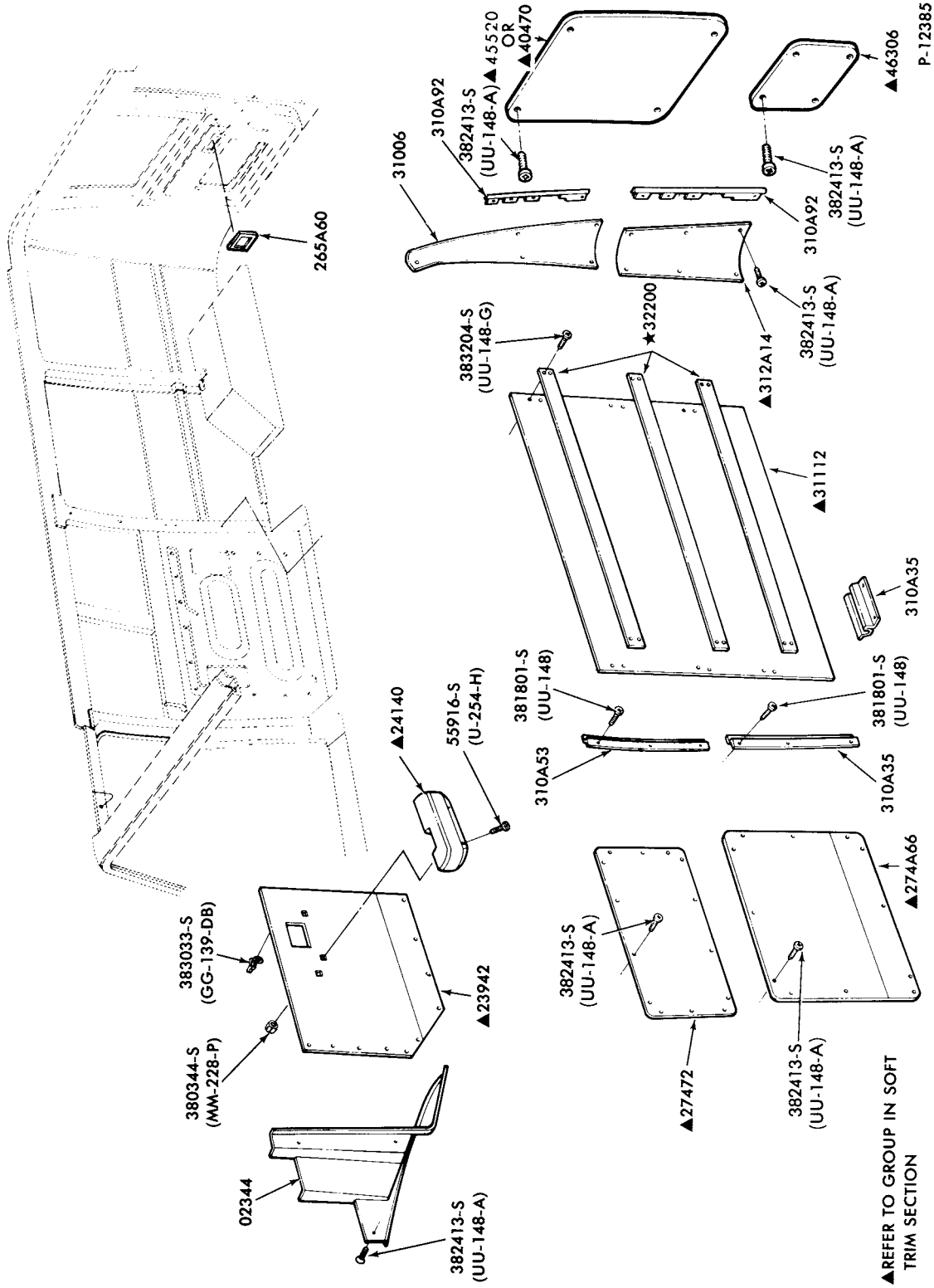

INTERIOR TRIM PANELS and RELATED PARTS - R.H.
1975/ E100/350--w/o WINDOWS

COPYRIGHT © 1979 -FORD MOTOR-DEARBORN, MICHIGAN
COMPANY

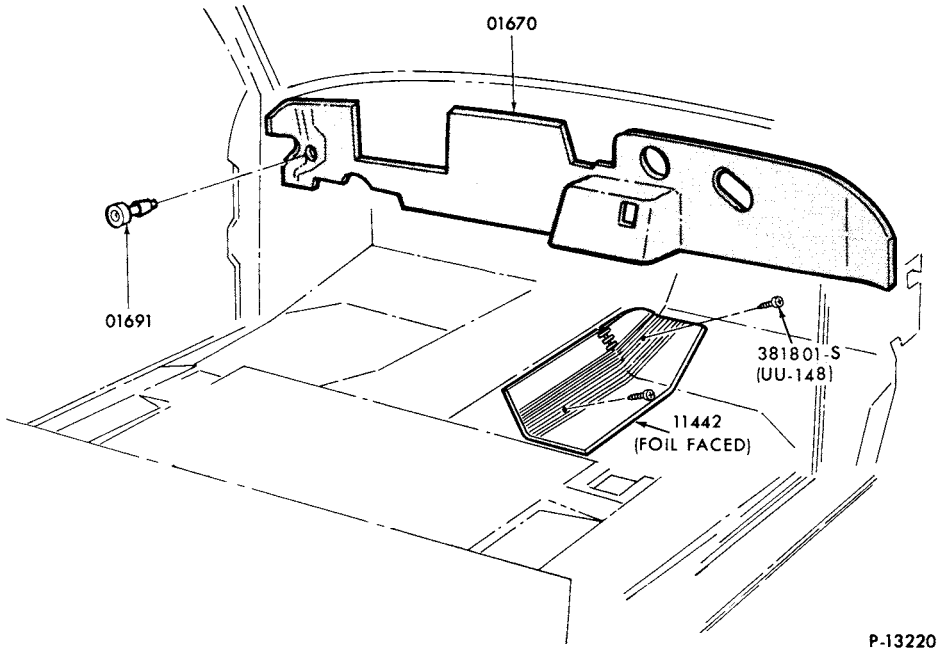

DASH and FLOOR INSULATOR
1975 / F100/350

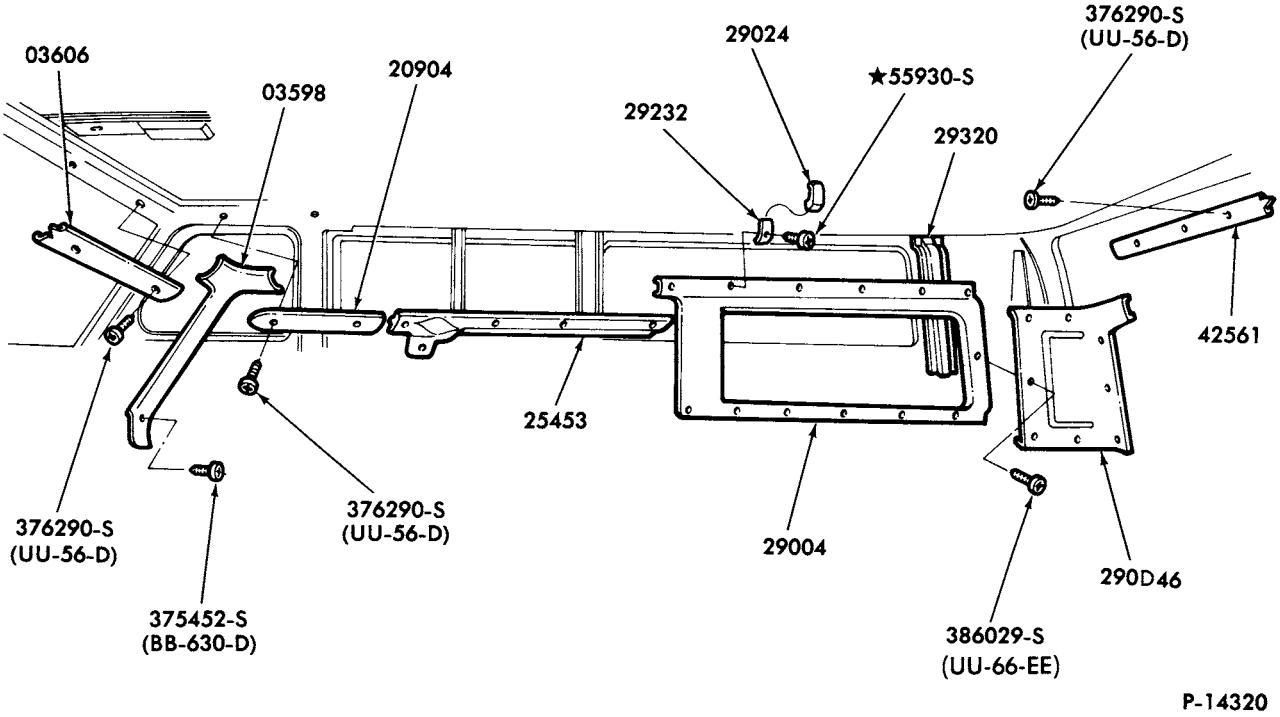

GARNISH MOULDINGS and RELATED PARTS
1978/ E150/350 (SUPER WAGON)--w/WINDOWS

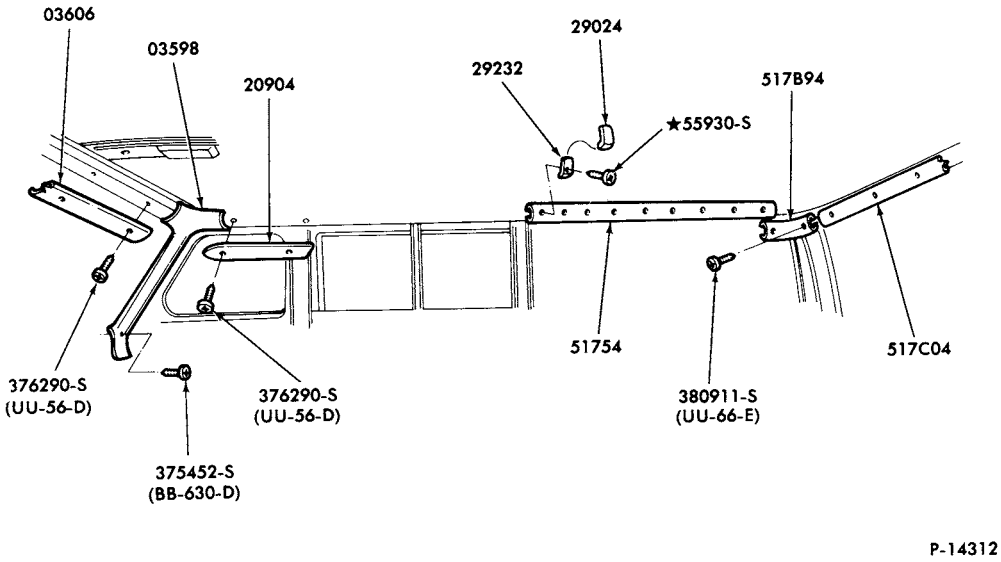

GARNISH MOULDINGS and RELATED PARTS (R.H. SIDE)
1975/79 E100/350--w/o WINDOWS

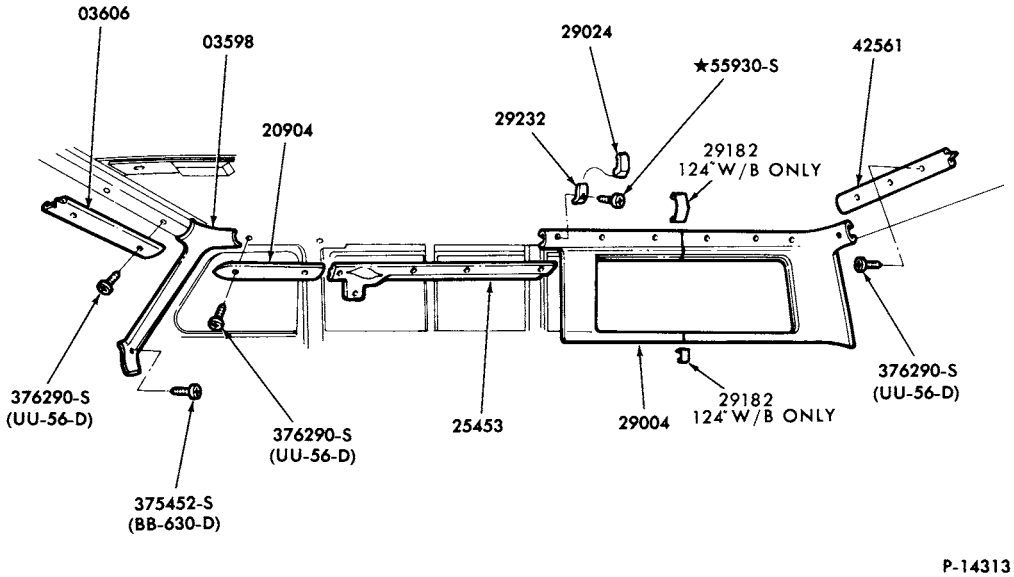

GARNISH MOULDINGS and RELATED PARTS (R.H. SIDE)
1975/79 E100/350 (EXC. SUPER WAGON)--w/WINDOWS

COPYRIGHT © 1979 FORD MOTOR COMPANY DEARBORN, MICHIGAN

1973/79
TRUCK SERIES 100/500

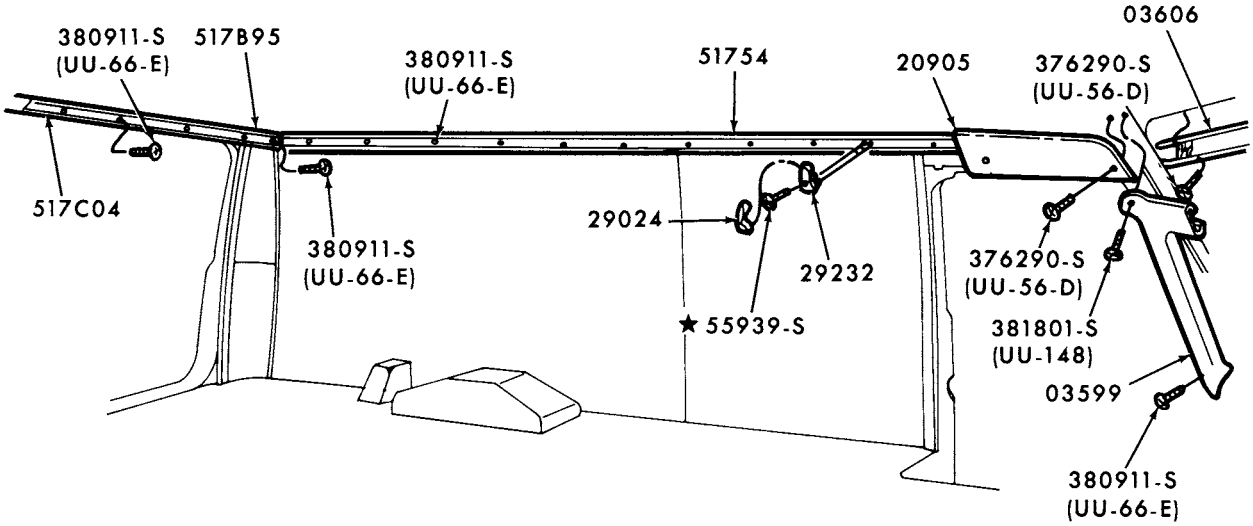

P-15061

GARNISH MOULDINGS and RELATED PARTS (L.H. SIDE)
1975/79 E100/350--w/o windows

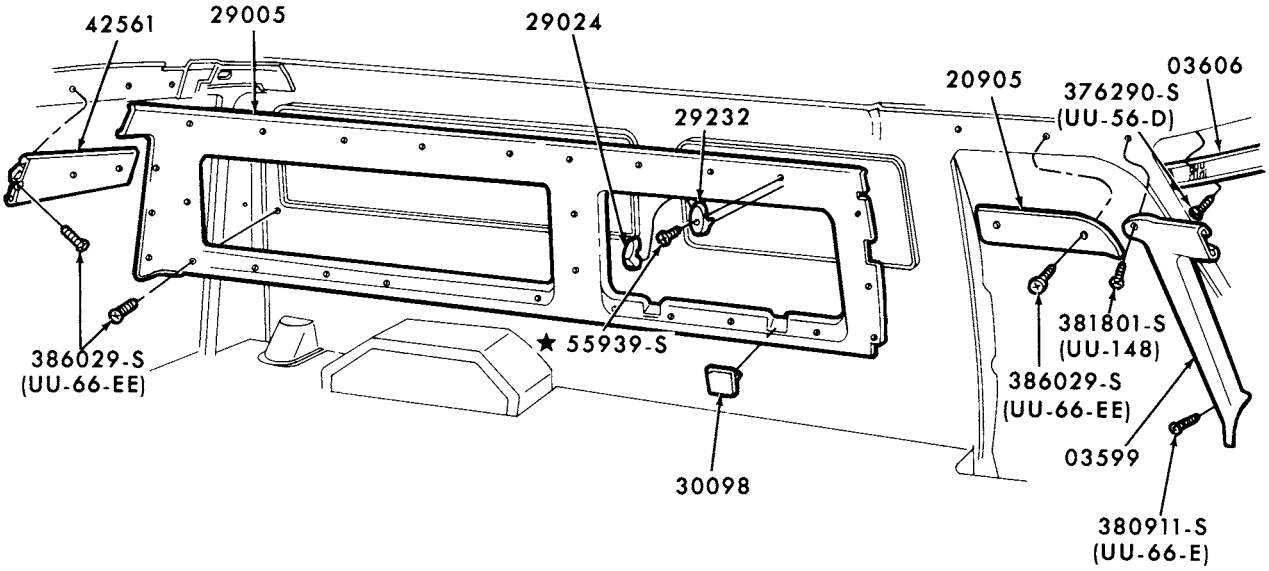

P-15062

GARNISH MOULDINGS and RELATED PARTS (L.H. SIDE)
1975/79 E100/350 (exc. SUPER WAGON)--w/windows

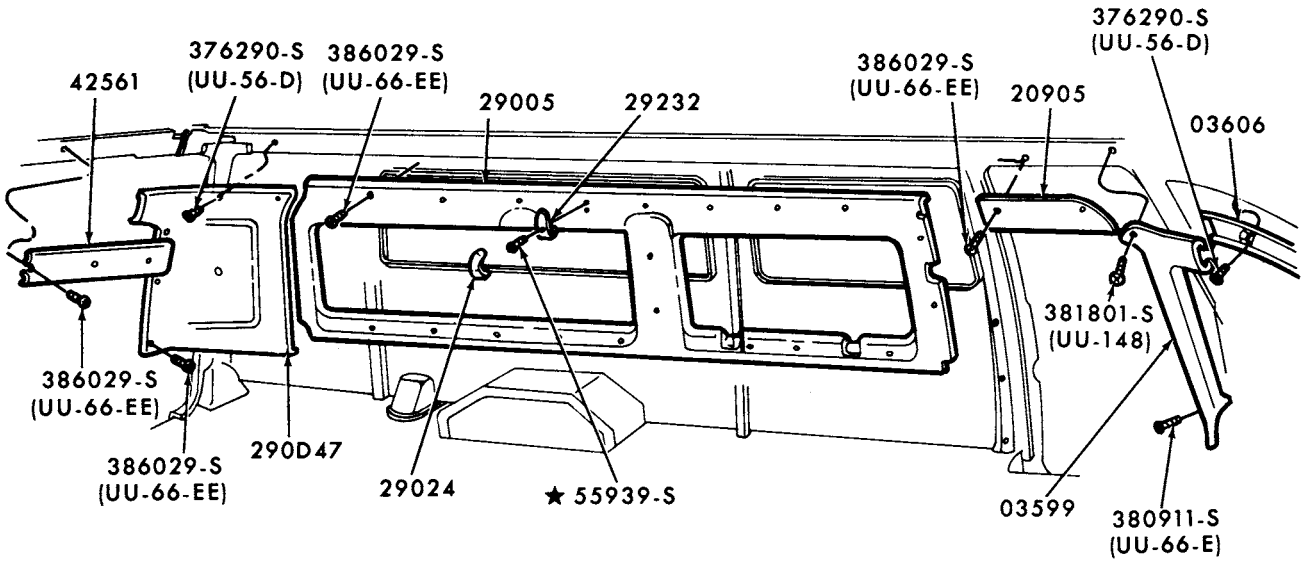

P-15063

GARNISH MOULDINGS and RELATED PARTS (L.H. SIDE)
1978/ E100/350 (SUPER WAGON)--w/WINDOWS

COPYRIGHT © 1979 FORD MOTOR COMPANY, DEARBORN, MICHIGAN